KAÇMAZLAR® MERCEDES GEARBOX 21 2023 - 2024

KAÇMAZLAR®
GEAR INDUSTRY

# MERCEDES GEARBOX GROUP 21

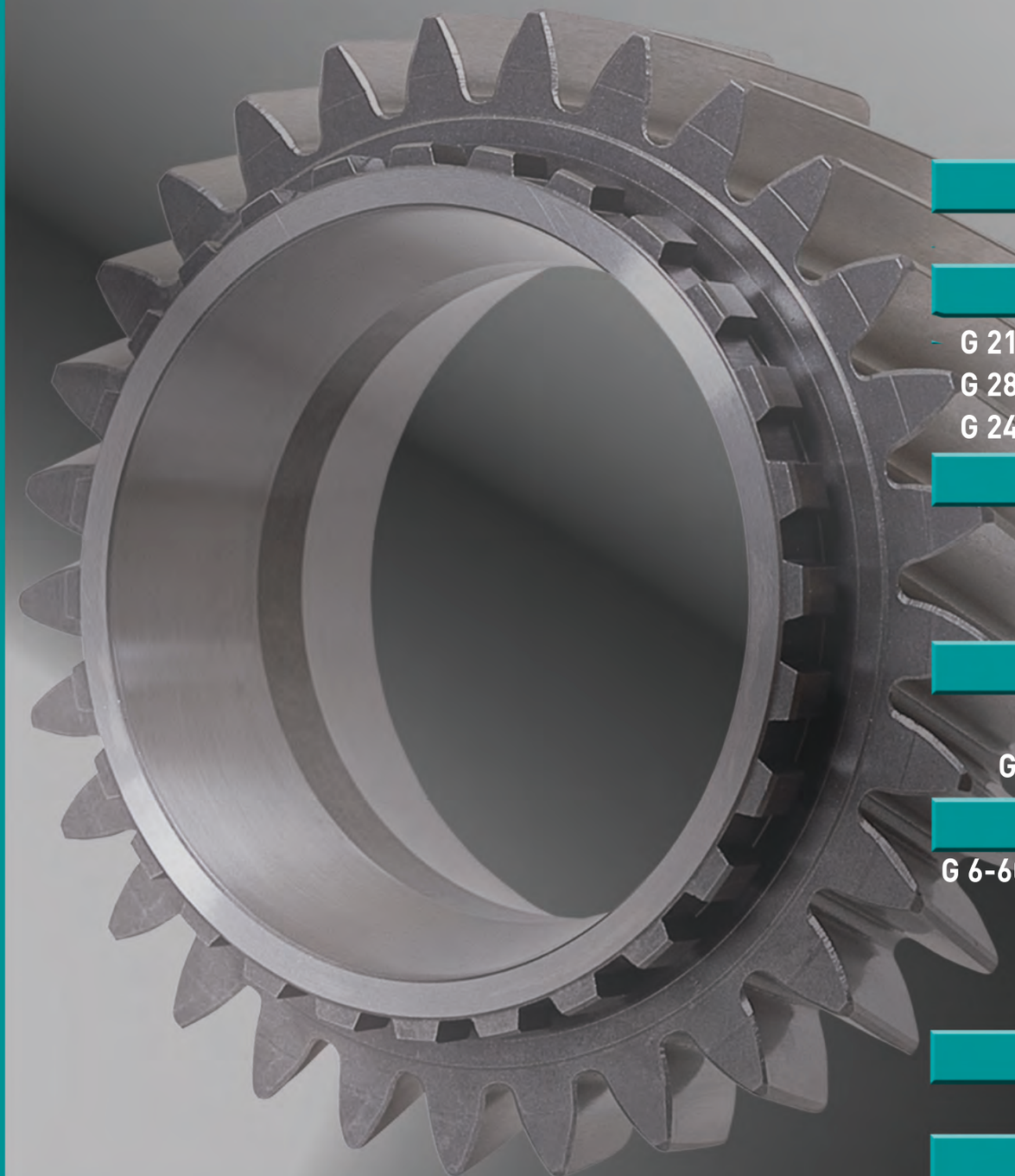

**16 SPEEDS**
- G 125 / G 135
- G 155 / G 180
- G 200
- G 210 / G 230
- G 211 / G 231
- G 240
- G 260

**12 SPEEDS**
- G 100

**KL GROUP**
- G 211-230 / 12 KL
- G 281-330 / 12 KL
- G 241-280 / 16 KL

**9 SPEEDS**
- G 131-G 141
- G 155
- G181-G 221

**8 SPEEDS**
- G 140-GO 210
- GO 240-GO 250

**6 SPEEDS**
- G 6-60 / G 60 / G 85
- G 71 / G90
- GO 170 - 190
- GO 210 - 230

**4 SPEEDS**
- GO 4 / 160

**OTHERS**
- P.T.O
- SHIFT TOWER
- RELEASE BEARING

**CATALOGUE 2023 - 2024**



KAÇMAZLAR Otomotiv Ltd. Şti, Türkiye'de ve Dünyada otomotiv endüstrisine hizmet vermek ve Türk sanayisinin dünya pazarlarında yer alabilmesi amacıyla bir aile şirketi olarak 1987 yılında Konya'da kurulmuştur.

KAÇMAZLAR Otomotiv Ltd. Şti, kuruluşundan bugüne geldiğinde ağır iş makinaları, kamyonlar, tırlar ve otobüsler olmak üzere VOLVO, SCANIA, MERCEDES, ZF, RENAULT, DAF, MAN, FORD, BMC, HINO, IVECO, KAMAZ ve MAZ marka araçlara ait şanzıman, diferansiyel ve aktarma dişlilerini üreterek 36 yıllık tecrübenin ve dünya markası olmanın gururunu yaşamaktadır.

36. yılında, KAÇMAZLAR Otomotiv'in üstün başarılarında emeği geçen tüm çalışanlarına ve müşterilerine, şirket kurucuları olan Seyit KAÇMAZ, Mehmet KAÇMAZ ve Hüseyin KAÇMAZ sonsuz teşekkürlerini sunarlar.

KAÇMAZLAR Otomotiv bugüne kadar olduğu gibi, bundan sonra da gücüne güç katmak ve müşterilerine daha iyi hizmet sunabilmek için çok daha iyi gelişmelere imza atacak Kaçmazlar ailesinin genç ve dinamik bireylerinin de iş hayatına atılmalarıyla, 30.000 m² 'den 115.000 m²'ye arttırılan çalışma alanında teknolojik yatırımlarla yükselen gelişimini sürdürmektedir.



KACMAZLAR Automotive Co. has been established as a family company with the aim of serving the domestic and international automotive industry and Turkish Industry's taking its place in the world markets, in Konya / TURKEY in 1987.

KACMAZLAR Automotive is proud of having 36 years of experience & being a world-brand by its production of gears of the gearboxes, differentials and transmissions particularly on heavy duty vehicles, trucks, trailer trucks and buses branded VOLVO, SCANIA, MERCEDES, ZF, RENAULT, DAF, MAN, FORD, BMC, HINO, IVECO, KAMAZ & MAZ, since its foundation.

In the 36th anniversary, founders of the company Seyit KACMAZ, Mehmet KACMAZ and Hüseyin KACMAZ presents their endless gratitude to all of its employees and customers who have a great effort in the over standing success of the KACMAZLAR Automotive.

As it has been by this time, KACMAZLAR Automotive is being maintained its development that increasing with technological investments in extended working place from 30.000 m² to 115.000 m² to gain more strength and also to be able to provide a better service for its customers by the getting a start in their business lives of the young & dynamic members of the KACMAZLAR Family whom might be put their signature under much more better developments.



KACMAZLAR Automotive Co fue fundada como una empresa familiar en Konya / TURQUÍA en 1987, con el objetivo de servir a la industria automotriz nacional e internacional, y con el fin qué la industria turca tenga un lugar en el mercado mundial.

KACMAZLAR Automotive se enorgullece de tener 36 años de experiencia y ser una marca mundial por su producción de engranajes, diferenciales y transmisiones especialmente para vehículos pesados, como camiones, remolques y autobuses de marca VOLVO, SCANIA, MERCEDES, ZF, RENAULT, DAF, MAN, FORD, BMC, HINO, IVECO, KAMAZ y MAZ, desde su fundación.

En el 36° aniversario, los fundadores de la empresa Seyit KACMAZ, Mehmet KACMAZ y Hüseyin KACMAZ presentan su infinita gratitud a todos sus empleados y clientes que tienen un gran esfuerzo en el logro excepcional de la KACMAZLAR Automotive.

Como ha sido hasta hoy, KACMAZLAR Automotive se está manteniendo su desarrollo en aumenta con inversiones tecnológicas en un lugar de trabajo ampliado de 30.000 m² a 115.000 m² para ganar más fuerza y también poder prestar un mejor servicio a sus clientes, y también con la participación de los miembros jóvenes y dinámicos de la Familia KACMAZLAR en la vida de negocios, los que podrían poner sus firmas en desarrollos mucho más mejores.



KACMAZLAR Automotive Co была основана в Конье, Турция в 1987 г. как семейная компания с целью обслуживания отечественной и международной автомобильной промышленности, а Турецкая промышленность заняла свое место на мировых рынках.

KACMAZLAR Automotive гордится тем, что обладает 36-летним опытом и является мировым брендом благодаря производству шестерен, редукторов, дифференциалов и трансмиссий, в частности, на тяжелые грузовые автомобили, грузовики, прицепы и автобусы под маркой VOLVO, SCANIA, MERCEDES, ZF, RENAULT, DAF, MAN, FORD, BMC, HINO, IVECO, КАМАЗ и МАЗ, с момента его основания.

В 36-летнюю годовщину основатели компании **Seyit KAÇMAZ**, **Mehmet KAÇMAZ** и **Hüseyin KAÇMAZ** представляют свою бесконечную благодарность всем своим сотрудникам и клиентам, которые прилагают большие усилия для достижения успеха KACMAZLAR Automotive.

Благодаря технологическим инвестициям KACMAZLAR Automotive на данный момент продолжает развиваться. Мы расширяем и увеличиваем рабочее пространство с 30 000 м² до 115 000 м², для получения больших мощностей. Мы имеем возможность предоставлять лучший сервис для своих клиентов, для начала их карьеры в деловой жизни молодых и динамичных членов семьи KACMAZLAR, которые могут поставить свою подпись под гораздо лучшими разработками.



تأسست شركة كاشمازلار لصناعة قطع السيارات في العام 1987 كشركة عائلية في مدينة قونيا في تركيا بهدف خدمة صناعة قطع غيار السيارات المحلية والدولية، وايضا لكي تحتل الصناعة التركية مكانها في الأسواق العالمية.

شركة كاشمازلار لصناعة قطع السيارات ومنذ تأسيسها الى يومنا هذا لهي فخورة بأن لديها 36 عاما من الخبرة في هذا المجال وكونها اصبحت علامة تجارية عالمية من خلال تنوع إنتاجها من التروس و علب التروس، التروس التفاضلية ( دفرنسيال) للمركبات الثقيلة والشاحنات والشاحنات المقطورة وحافلات النقل وخاصة لموديلات فولفو، سكانيا، مرسيدس، زد اف، رينو ، داف، مان، فورد، بي ام جي، هينو، إيفيكو، كماز و ماز.

في الذكرى ال 36 لتأسيس الشركة ، يود مؤسسي الشركة السيد سيت كشماز،السيد محمد كاشماز والسيد حسين كاشماز ان يعبروا عن شكرهم و امتنانهم المطلق لجميع موظفيها وعملائها الذين كانوا وما زالوا لهم الاثر الكبير في النجاح المتميز لشركة كاشمازلار لصناعة قطع السيارات.

كما هو الحال منذ اليوم الاول وحتي هذا اليوم،فانه تم الحفاظ على تطور الشركة من خلال زيادة الاستثمارات التكنولوجية والمكائن الحديثة وكذلك الاستثمار في توسعة المصنع من 30.000 متر مربع إلى 115.000 متر مربع. وكذلك بدا جيل من شباب عائلة كاشمازلار لتسلم العمل وادارة المصنع لكسب المزيد من القوة والطاقة في الانتاج والمضي قدما نحو الاهداف المرسومة وأيضا لتكون قادرة على تقديم خدمة مميزة لعملائها الكرام



شرکت خودروسازی و تجارت محدود کاچمازلار (KAÇMAZLAR) در سال 1987 در شهر قونیه ترکیه به عنوان یک شرکت خانوادگی برای خدمت به صنعت خودرو در ترکیه و جهان تاسیس شد تا صنعت ترکیه را در بازارهای جهانی فعال کند.

شرکت خودروسازی و تجارت محدود کاچمازلار (KAÇMAZLAR) افتخار 36 سال تجربه و برند جهانی بودن را از زمان تاسیس تا به امروز در تولید ماشین آلات کار، کامیون ها، تیرها و اتوبوس ها از جمله گیرباکس و دیفرانسیل و انتقال دنده های متعلق به برندهای وسایل نقلیه VOLVO, SCANIA, MERCEDES, ZF, RENAULT, DAF, MAN, FORD, BMC, HINO, IVECO, KAMAZ, MAZ میکند.

در 36 سالگی شرکت خودروسازی کاچمازلار (KAÇMAZLAR) از تمام کارکنان و مشتری ها که در موفقیت شرکت تلاش کرده اند از جمله آقای سید کاچماز و آقای محمد کاچماز و آقای حسین کاچماز که بنیان بنیانگذاران شرکت هستند، تشکر فراوان عرض میکنند.

شرکت خودروسازی کاچمازلار (KAÇMAZLAR) همانطور که تا به امروز بوده خودروها پیشرفت بسیار خوبی را به منظور تقویت قدرت و ارائه خدمات بهتر به مشتریان خود و برای پیشرفتهای بهتر انجام خواهد داد. اعضای خوانواده و جوانان پویای کاچمازلار (KAÇMAZLAR) با وارد شدن به دنیای تجارت با سرمایه گذاری های تکنولوژیکی خود در زمینه کاری، که از 30000 متر مربع تا 115000 متر مربع افزایش یافته است، توسعه خود را در حال ادامه دادن هستند.



# GÜÇLÜ ALTYAPI,
# GÜÇLÜ TEKNOLOJİ

STRONG IN FRASTUCTURE, **STRONG TECHNOLOGY**






# KALİTEDE SÜREKLİLİK, ÜRETİMDE VERİMLİLİK

CONTINUITY IN QUALITY, **PRODUCTIVITY IN PRODUCTION**





GÜCÜ, ÜSTÜN PERFORMANSLA

# BİRLEŞTİRDİK

WE **COMBINED** POWER WITH SUPERIOR TECHNOLOGY




KLINGELNBERG
P 65
2K6

Certificate TR18/002675

The management system of

# KAÇMAZLAR OTOMOTİV TİCARET VE SANAYİ LTD ŞTİ

Büyükkayacıkosb Mahallesi, 102.Cad., İdari Bina Apt., No:1/1, Selçuklu, Konya, Turkey

has been assessed and certified as meeting the requirements of

## ISO 9001:2015

For the following activities

**AUTOMOTIVE SPARE PARTS (ENGINE, GEARBOX AND POWERTRAIN) GEAR PRODUCTION, HEAT TREATMENT AND SALES**

This certificate is valid from 13 January 2022 until 26 November 2024 and remains valid subject to satisfactory surveillance audits.
Recertification audit due a minimum of 60 days before the expiration date.
Issue 3. Certified since 27 November 2018

Authorised by

SGS United Kingdom Ltd
Rossmore Business Park Ellesmere Port Cheshire CH65 3EN UK
t +44 (0)151 350-6666 f +44 (0)151 350-6600 www.sgs.com

21HC 9001 2015 0421



This document is issued by the Company subject to its General Conditions of Certification Services accessible at www.sgs.com/terms_and_conditions.htm. Attention is drawn to the limitations of liability, indemnification and jurisdictional issues established therein. The authenticity of this document may be verified at http://www.sgs.com/en/certified-clients-and-products/certified-client-directory. Any unauthorized alteration, forgery or falsification of the content or appearance of this document is unlawful and offenders may be prosecuted to the fullest extent of the law.

# CONTENTS


| GROUP NO | DESCRIPTION / TANIM | SAYFA/PAGES |
|---|---|---|
| **16 SPEED** | | |
| | GEARBOX G 125 - 16 / 14,0 - G 135-16 / 11,9 | 19-38 |
| | GEARBOX G 155 - 16, G 180 - 16 / 11,9 - 14,0 | 39-62 |
| | GEARBOX G 200 - 16 / 11,9 | 63-84 |
| | GEARBOX G 210 - 16 / 14,2 - 0,83 | 85-126 |
| | GEARBOX G 230 -16 / 14,02 - 0,83 | 127-166 |
| | GEARBOX G 211 - 16, G 231-16 / 17,3 - 1,0 | 167-204 |
| | GEARBOX G 240 - 16 / 11,07 - 0,69 | 205-246 |
| | GEARBOX G 260-16 / 9,75 - 0,57 | 247-270 |
| **12 SPEED** | | |
| | GEARBOX G 100-12 / 10.0 - 0,82 | 271-286 |
| **KL GROUP** | | |
| | GEARBOX G 211-12 KL / 14,93 - 1,0 | 287-314 |
| | GEARBOX G 230-12 KL / 11,67 - 0,78 | 315-342 |
| | GEARBOX G 281-12 KL / 14,93 - 1,0 | 343-370 |
| | GEARBOX G 330-12 KL / 11,63 - 0,77 | 371-398 |
| | GEARBOX G 241-16 KL / 17,00 - 1,00 | 399-420 |
| | GEARBOX G 280-16 KL / 11,07 - 0,69 OLD | 421-444 |
| | GEARBOX G 280-16 KL / 11,07 - 0,69 NEW | 445-464 |
| **9 SPEED** | | |
| | GEARBOX G 131-9 / 14,57 - 1,0 | 465-484 |
| | GEARBOX G 141-9 / 14,57 - 1,0 | 485-502 |
| | GEARBOX G 155-9 / 15,9 | 503-520 |
| | GEARBOX G 221-9/10,19-1,0 & G 181-9/10,19-1,0 | 521-542 |
| **8 SPEED** | | |
| | GEARBOX G 140-8 / 9,30 - 0,79 | 543-552 |
| | GEARBOX GO 210-8 / 11,8 | 503-520 |
| | GEARBOX GO 240-8 / 6,57 - 0,63 | 553-564 |
| | GEARBOX GO 250-8 / 6,57 - 0,63 | 565-574 |
| **6 SPEED** | | |
| | GEARBOX G 6-60 / G 60-6 / G 85-6 | 1-10 |
| | GEARBOX G 71 - G 90 / 6 | 11-18 |
| | GEARBOX GO 170-6 / 8,2-1,0 & GO 190-6 / 8,2 - 1,0 | 575-592 |
| | GEARBOX GO 210-230 / 6 | 593-612 |
| **4 SPEED** | | |
| | GEARBOX GO 4 / 160 | 613-622 |
| **OTHERS** | | |
| | P.T.O - SHIFT TOWER - RELEASE BEARING | 623-651 |


**Original parts names, oem numbers, symbols and descriptions used in this catalogue are for reference purposes only.**

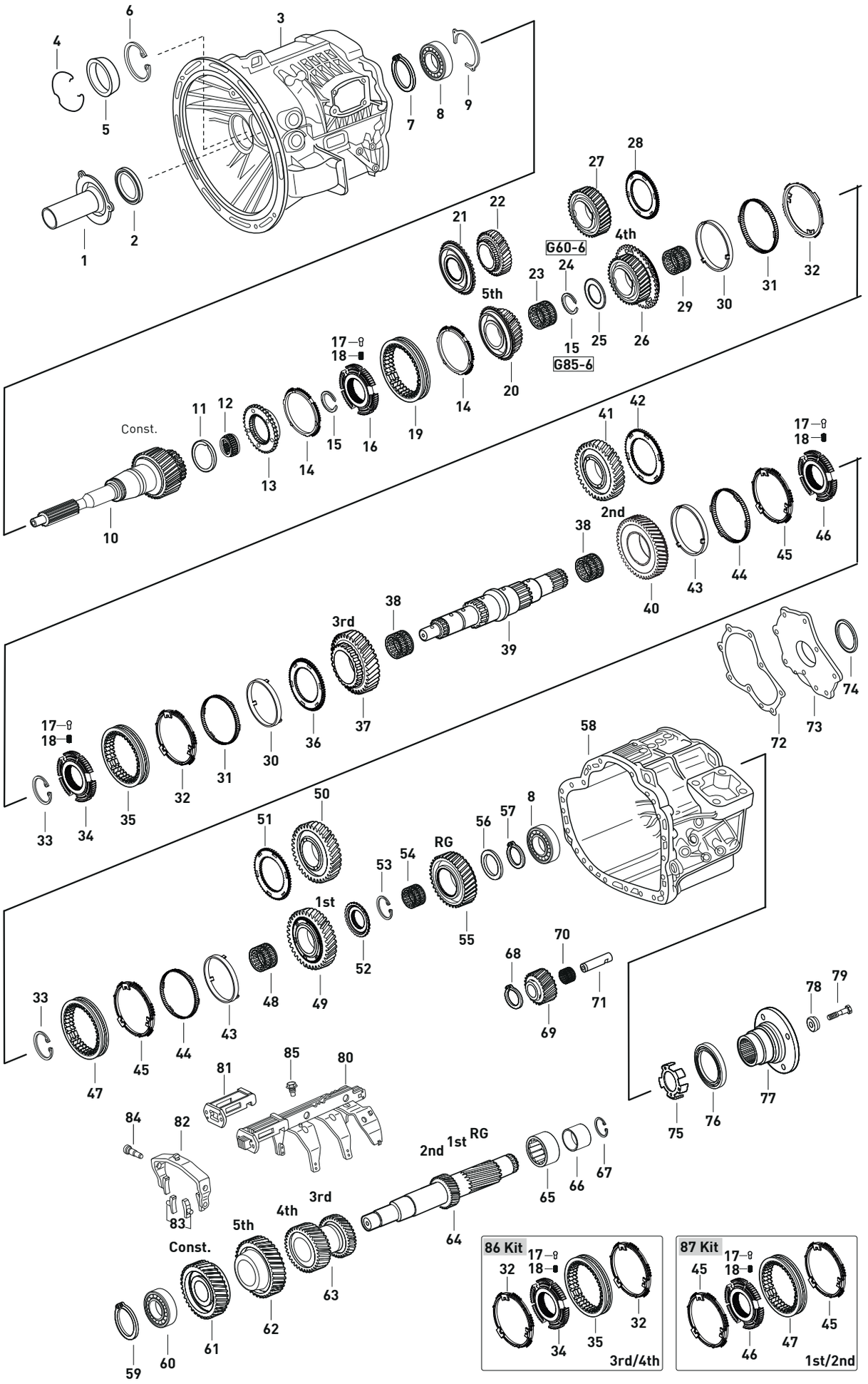




Original parts names, oem numbers, symbols and descriptions used in this catalogue are for reference purposes only.

| Fig. | Kacmaz No | Oem No | Oem Old No | Pcs. | Ürün Tanımı | Description | Sizes | Not | G60 - 6 | G6 - 60 | G85 - 6 |
|---|---|---|---|---|---|---|---|---|---|---|---|
| 1 | K21.06853 | 970 261 0043 | | 1 | PRİZDİREK KEÇE KAPAĞI | COVER | | | ♦ | ♦ | ♦ |
| 2 | K21.06724 | 013 997 2646 | | 1 | PRİZDİREK ÖN KEÇE | OIL SEAL | 55X80X8mm | | ♦ | ♦ | ♦ |
| 3 | | 694 261 0001 | | 1 | ŞANZIMAN ÖN GÖVDE | HOUSING | | | ♦ | | |
| 3 | | 970 261 0801 | | 1 | ŞANZIMAN ÖN GÖVDE | HOUSING | | | ♦ | ♦ | ♦ |
| 3 | | 970 261 0901 | | 1 | ŞANZIMAN ÖN GÖVDE | HOUSING | | | ♦ | ♦ | |
| 3 | | 970 261 1301 | | 1 | ŞANZIMAN ÖN GÖVDE | HOUSING | | | ♦ | | ♦ |
| 3 | | 970 261 1601 | | 1 | ŞANZIMAN ÖN GÖVDE | HOUSING | | | ♦ | | |
| 3 | | 970 261 1701 | | 1 | ŞANZIMAN ÖN GÖVDE | HOUSING | | | ♦ | | |
| 3 | | 976 261 3101 | | 1 | ŞANZIMAN ÖN GÖVDE | HOUSING | | | ♦ | | ♦ |
| 3 | | 976 261 3301 | | 1 | ŞANZIMAN ÖN GÖVDE | HOUSING | | | ♦ | | ♦ |
| 4 | K21.06725 | 970 263 0093 | | 1 | G.MİLİ ÖN BİLYA KAPAK SEKMANI | RETAINING RING | | | ♦ | ♦ | ♦ |
| 5 | K21.06726 | 970 261 0333 | (970 261 0233) | 1 | GRUP MİLİ ÖN BİLYA KAPAĞI | COVER | | | ♦ | ♦ | ♦ |
| 6 | K21.06727 | 970 994 1841 | | 1 | G.MİLİ ÖN BİLYA KAPAK SEKMANI | RETAINING RING | 2,88mm | | ♦ | ♦ | ♦ |
| 6 | K21.06728 | 970 994 1941 | | 1 | G.MİLİ ÖN BİLYA KAPAK SEKMANI | RETAINING RING | 2,91mm | | ♦ | ♦ | ♦ |
| 6 | K21.06729 | 970 994 2041 | | 1 | G.MİLİ ÖN BİLYA KAPAK SEKMANI | RETAINING RING | 2,95mm | | ♦ | ♦ | ♦ |
| 6 | K21.06730 | 970 994 3541 | (000472 100000) | 1 | G.MİLİ ÖN BİLYA KAPAK SEKMANI | RETAINING RING | 3,00mm | | ♦ | ♦ | ♦ |
| 7 | K21.06731 | 970 994 0641 | | 1 | PRİZDİREK ÖN BİLYA SEKMANI | RETAINING RING | 2,80mm | | ♦ | ♦ | ♦ |
| 7 | K21.06732 | 970 994 0741 | | 1 | PRİZDİREK ÖN BİLYA SEKMANI | RETAINING RING | 2,84mm | | ♦ | ♦ | ♦ |
| 7 | K21.06733 | 970 994 0841 | | 1 | PRİZDİREK ÖN BİLYA SEKMANI | RETAINING RING | 2,88mm | | ♦ | ♦ | ♦ |
| 7 | K21.06734 | 970 994 3241 | | 1 | PRİZDİREK ÖN BİLYA SEKMANI | RETAINING RING | 2,92mm | | ♦ | ♦ | ♦ |
| 7 | K21.06735 | 970 994 3341 | | 1 | PRİZDİREK ÖN BİLYA SEKMANI | RETAINING RING | 2,96mm | | ♦ | ♦ | ♦ |
| 7 | K21.06736 | 970 994 3441 | | 1 | PRİZDİREK ÖN BİLYA SEKMANI | RETAINING RING | 3,00mm | | ♦ | ♦ | ♦ |
| 7 | K21.06737 | 011 994 2541 | | 1 | PRİZDİREK ÖN BİLYA SEKMANI | RETAINING RING | 3,05mm | | ♦ | ♦ | ♦ |
| 7 | K21.06738 | 011 994 2641 | | 1 | PRİZDİREK ÖN BİLYA SEKMANI | RETAINING RING | 3,10mm | | ♦ | ♦ | ♦ |
| 8 | K21.06739 | 009 981 5525 | (007 981 0525) | 2 | PRİZ.ÖN BİLYA VE K.MİL ARKA BİLYA | ROLLER BEARING | 55X120X29mm | | ♦ | ♦ | ♦ |
| | | | (009 981 5825) | | | | | | | | |
| | | | (011 981 0125) | | | | | | | | |
| 9 | K21.06740 | 970 994 3941 | | 1 | PRİZ.ÖN BİLYA SABİTLEME SEKMANI | RETAINING RING | 3,90mm | | ♦ | ♦ | ♦ |
| 9 | K21.06741 | 970 994 4141 | | 1 | PRİZ.ÖN BİLYA SABİTLEME SEKMANI | RETAINING RING | 4,00mm | | ♦ | ♦ | ♦ |
| 10 | K21.06600 | 970 262 1902 | (694 262 0002) | 1 | PRİZDİREK 24 DİŞ | INPUT SHAFT 24 T. | | | ♦ | ♦ | |
| | | | (970 262 2002) | | | | | | | | |
| 10 | | 970 262 0502 | (970 262 0602) | 1 | PRİZDİREK 24 DİŞ | INPUT SHAFT 24 T. | | | | ♦ | |
| 10 | K21.06601 | 976 262 1402 | (976 262 1502) | 1 | PRİZDİREK 28 DİŞ | INPUT SHAFT 28 T. | | | | | ♦ |
| | | | (695 262 0002) | | | | | | | | |
| 10 | K21.06907 | 976 262 1702 | | 1 | PRİZDİREK 28 DİŞ | INPUT SHAFT 28 T. | | | | | ♦ |
| 10 | | 976 262 0202 | | 1 | PRİZDİREK 28 DİŞ | INPUT SHAFT 28 T. | | | | | ♦ |
| 10 | | 976 262 4402 | | 1 | PRİZDİREK 28 DİŞ | INPUT SHAFT 28 T. | | | | | ♦ |
| 11 | K21.06742 | 001 990 0182 | | 1 | PRİZDİREK PULU | THRUST WASHER | 2,90mm | | ♦ | ♦ | ♦ |
| 11 | K21.06743 | 000 990 9982 | | 1 | PRİZDİREK PULU | THRUST WASHER | 3,00mm | | ♦ | ♦ | ♦ |
| 11 | K21.06744 | 000 990 9782 | | 1 | PRİZDİREK PULU | THRUST WASHER | 3,10mm | | ♦ | ♦ | ♦ |
| 11 | K21.06745 | 000 990 9582 | | 1 | PRİZDİREK PULU | THRUST WASHER | 3,20mm | | ♦ | ♦ | ♦ |
| 11 | K21.06746 | 000 990 9382 | | 1 | PRİZDİREK PULU | THRUST WASHER | 3,30mm | | ♦ | ♦ | ♦ |
| 11 | K21.06747 | 000 990 9182 | | 1 | PRİZDİREK PULU | THRUST WASHER | 3,40mm | | ♦ | ♦ | ♦ |
| 11 | K21.06748 | 970 990 0282 | | 1 | PRİZDİREK PULU | THRUST WASHER | 3,50mm | | ♦ | ♦ | ♦ |
| 11 | K21.06749 | 970 990 0482 | | 1 | PRİZDİREK PULU | THRUST WASHER | 3,60mm | | ♦ | ♦ | ♦ |
| 11 | K21.06750 | 970 990 0682 | | 1 | PRİZDİREK PULU | THRUST WASHER | 3,70mm | | ♦ | ♦ | ♦ |
| 11 | K21.06751 | 970 990 0882 | | 1 | PRİZDİREK PULU | THRUST WASHER | 3,80mm | | ♦ | ♦ | ♦ |
| 11 | K21.06752 | 970 262 1152 | | 1 | PRİZDİREK PULU | THRUST WASHER | 3,90mm | | ♦ | ♦ | ♦ |
| 11 | K21.06753 | 970 262 1252 | | 1 | PRİZDİREK PULU | THRUST WASHER | 4,00mm | | ♦ | ♦ | ♦ |
| 11 | K21.06754 | 970 262 1352 | | 1 | PRİZDİREK PULU | THRUST WASHER | 4,10mm | | ♦ | ♦ | ♦ |
| 11 | K21.06755 | 970 262 1452 | | 1 | PRİZDİREK PULU | THRUST WASHER | 4,20mm | | ♦ | ♦ | ♦ |
| 11 | K21.06756 | 970 262 1552 | | 1 | PRİZDİREK PULU | THRUST WASHER | 4,30mm | | ♦ | ♦ | ♦ |
| 11 | K21.06757 | 970 262 1652 | | 1 | PRİZDİREK PULU | THRUST WASHER | 4,40mm | | ♦ | ♦ | ♦ |

NOTES :
Parts encoded alphabetic and numaric are used together.

NOTLAR :
Alfabetik ve rakam ile kodlanan parçalar birlikte kullanılır.





Original parts names, oem numbers, symbols and descriptions used in this catalogue are for reference purposes only.

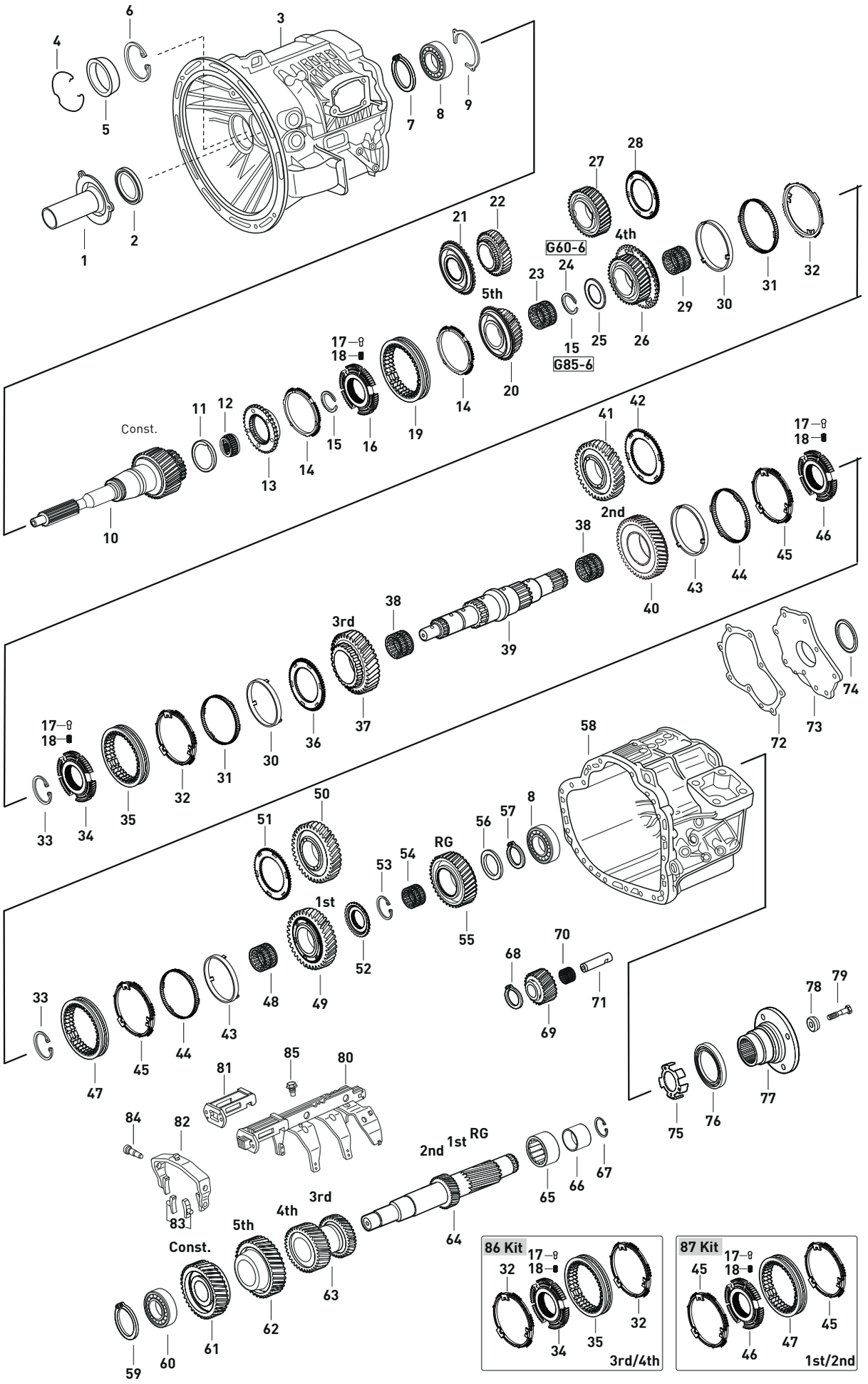




Original parts names, oem numbers, symbols and descriptions used in this catalogue are for reference purposes only.

| Fig. | Kacmaz No | Oem No | Oem Old No | Pcs. | Ürün Tanımı | Description | Sizes | Not | G60 - 6 | G6 - 60 | G85 - 6 |
|---|---|---|---|---|---|---|---|---|---|---|---|
| 11 | K21.06758 | 970 262 1752 | | 1 | PRİZDİREK PULU | THRUST WASHER | 4,50mm | | ♦ | ♦ | ♦ |
| 11 | K21.06759 | 970 262 1852 | | 1 | PRİZDİREK PULU | THRUST WASHER | 4,60mm | | ♦ | ♦ | ♦ |
| 11 | K21.06760 | 970 262 1952 | | 1 | PRİZDİREK PULU | THRUST WASHER | 4,70mm | | ♦ | ♦ | ♦ |
| 11 | K21.06761 | 970 262 2052 | | 1 | PRİZDİREK PULU | THRUST WASHER | 4,80mm | | ♦ | ♦ | ♦ |
| 11 | K21.06762 | 970 262 2152 | | 1 | PRİZDİREK PULU | THRUST WASHER | 4,90mm | | ♦ | ♦ | ♦ |
| 11 | K21.06763 | 970 262 2252 | | 1 | PRİZDİREK PULU | THRUST WASHER | 5,00mm | | ♦ | ♦ | ♦ |
| 12 | K21.06764 | 976 981 0012 | | 1 | KAMALI MİL UÇ BİLYA | NEEDLE BEARING | 37X57X30,5mm | | ♦ | ♦ | ♦ |
| 13 | K21.06609 | 970 262 1534 | (693 262 0534) | 1 | PRİZDİREK/5.VİTES SENKROMENÇ 60 DİŞ | ENGAGING RING 60 T. | | | ♦ | ♦ | ♦ |
| | | | (694 262 0134) | | | | | | | | |
| | | | (975 262 0134) | | | | | | | | |
| 14 | K21.06599 | 970 262 3037 | (970 262 1437) | 2 | PRİZDİREK/5.VİTES FRENLEME | SYNCHRONIZING CONE | | | ♦ | ♦ | ♦ |
| | | | (970 262 1537) | | | | | | | | |
| 15 | K21.06765 | 970 262 2594 | | 1 | PRİZ./5./4.VİT.YILDIZ DİŞLİ SEKMANI | RETAINING RING | 1,79mm | | ♦ | ♦ | |
| 15 | K21.06766 | 970 262 1194 | | 1 | PRİZ./5./4.VİT.YILDIZ DİŞLİ SEKMANI | RETAINING RING | 1,84mm | | ♦ | ♦ | |
| 15 | K21.06767 | 970 262 1294 | | 1 | PRİZ./5./4.VİT.YILDIZ DİŞLİ SEKMANI | RETAINING RING | 1,89mm | | ♦ | ♦ | |
| 15 | K21.06768 | 970 262 1394 | | 1 | PRİZ./5./4.VİT.YILDIZ DİŞLİ SEKMANI | RETAINING RING | 1,94mm | | ♦ | ♦ | |
| 15 | K21.06769 | 970 262 1494 | | 1 | PRİZ./5./4.VİT.YILDIZ DİŞLİ SEKMANI | RETAINING RING | 2,00mm | | ♦ | ♦ | |
| 15 | K21.06779 | 976 262 1894 | | 2 | PRİZ./5/4.VİT.YILDIZ DİŞLİ SEKMANI | RETAINING RING | 1,75mm | | | | ♦ |
| 15 | K21.06827 | 976 262 1794 | | 2 | PRİZ./5/4.VİT.YILDIZ DİŞLİ SEKMANI | RETAINING RING | 1,80mm | | | | ♦ |
| 15 | K21.06828 | 976 262 1694 | | 2 | PRİZ./5/4.VİT.YILDIZ DİŞLİ SEKMANI | RETAINING RING | 1,85mm | | | | ♦ |
| 15 | K21.06829 | 976 262 1594 | | 2 | PRİZ./5./4.VİT.YILDIZ DİŞLİ SEKMANI | RETAINING RING | 1,90mm | | | | ♦ |
| 15 | K21.06830 | 976 262 1494 | | 2 | PRİZ./5./4.VİT.YILDIZ DİŞLİ SEKMANI | RETAINING RING | 1,94mm | | | | ♦ |
| 15 | K21.06886 | 976 262 1394 | | 2 | PRİZ./5./4.VİT.YILDIZ DİŞLİ SEKMANI | RETAINING RING | 1,98mm | | | | ♦ |
| 15 | K21.06831 | 976 262 1294 | | 2 | PRİZ./5./4.VİT.YILDIZ DİŞLİ SEKMANI | RETAINING RING | 2,02mm | | | | ♦ |
| 15 | K21.06887 | 976 262 1194 | | 2 | PRİZ./5./4.VİT.YILDIZ DİŞLİ SEKMANI | RETAINING RING | 2,06mm | | | | ♦ |
| 15 | K21.06832 | 976 262 1094 | | 2 | PRİZ./5./4.VİT.YILDIZ DİŞLİ SEKMANI | RETAINING RING | 2,10mm | | | | ♦ |
| 15 | K21.07009 | 976 262 0394 | | 2 | PRİZ./5./4.VİT.YILDIZ DİŞLİ SEKMANI | RETAINING RING | 2,92mm | | | | ♦ |
| 15 | K21.06780 | 976 262 0294 | | 2 | PRİZ./5./4.VİT.YILDIZ DİŞLİ SEKMANI | RETAINING RING | 2,96mm | | | | ♦ |
| 16 | K21.06602 | 970 262 1535 | (970 262 1235) | 1 | PRİZDİREK VE 5.VİTES YILDIZ DİŞLİ | SYNCHRONIZER HUB | | (C) | ♦ | ♦ | |
| 16 | K21.06845 | 694 262 0135 | | 1 | PRİZDİREK VE 5.VİTES YILDIZ DİŞLİ | SYNCHRONIZER HUB | | (D) | ♦ | | |
| 16 | K21.06610 | 976 262 0835 | (976 262 0935) | 1 | PRİZDİREK VE 6.VİTES YILDIZ DİŞLİ | SYNCHRONIZER HUB | | (A) | | | ♦ |
| 16 | K21.06844 | 695 262 0035 | | 1 | PRİZDİREK VE 6.VİTES YILDIZ DİŞLİ | SYNCHRONIZER HUB | | (B) | | | ♦ |
| 17 | K21.06770 | 970 262 0274 | | 9 | YILDIZ DİŞLİ FİŞEĞİ | PRESSURE PIECE | | | ♦ | ♦ | ♦ |
| 18 | K21.06771 | 970 993 6401 | (970 993 4601) | 9 | YILDIZ DİŞLİ FİŞEK YAYI | SPRING | | | ♦ | ♦ | ♦ |
| 19 | K21.06614 | 970 262 2923 | (694 262 0223) | 1 | PRİZ.-5./PRİZ.-6.VİTES HALKA | ENGAGING SLEEVE | | | ♦ | ♦ | ♦ |
| | | | (967 262 0023) | | | | | | | | |
| | | | (975 262 0123) | | | | | | | | |
| 20 | K21.06690 | 970 260 1944 | (970 260 0844) | 1 | 5.VİTES DİŞLİSİ 28 DİŞ | GEAR 5th 28 T. | | (C) | ♦ | ♦ | |
| | | | (970 260 0908) | | | | | | | | |
| 21 | K21.06678 | 694 262 0034 | | 1 | 5.VİTES SENKROMENÇ | ENGAGING RING | | (D) | ♦ | | |
| 21 | K21.06843 | 976 262 1634 | (976 262 1734) | 1 | 6.VİTES SENKROMENÇ | ENGAGING RING | | (A) | | | ♦ |
| 21 | K21.06611 | 695 262 0034 | | 1 | 6.VİTES SENKROMENÇ | ENGAGING RING | | (B) | | | ♦ |
| 22 | K21.06626 | 694 262 0115 | | 1 | 5.VİTES DİŞLİSİ 28 DİŞ | GEAR 5th 28 T. | | (D) | ♦ | | |
| 22 | | 976 262 1016 | | 1 | 5.VİTES DİŞLİSİ 24 DİŞ | GEAR 5th 24 T. | | | | | ♦ |
| 22 | K21.06842 | 976 262 0916 | (976 262 0816) | 1 | 5.VİTES DİŞLİSİ 24 DİŞ | GEAR 5th 24 T. | | (A) | | | ♦ |
| | | | (976 262 0216) | | | | | | | | |
| | | | (976 262 0116) | | | | | | | | |
| 22 | K21.06621 | 695 262 0016 | | 1 | 6.VİTES DİŞLİSİ 24 DİŞ | GEAR 6th 24 T. | | (B) | | | ♦ |
| 23 | K21.06835 | 014 981 0610 | (017 981 6310) | 1 | 5.VİTES MASURA BİLYA | NEEDLE CAGE | 68X60X40mm | | ♦ | ♦ | |
| | | | (018 981 5510) | | | | | | | | |
| | | | (018 981 9710) | | | | | | | | |
| 23 | K21.06772 | 018 981 3610 | (018 981 0110) | 1 | 6.VİTES MASURA BİLYA | NEEDLE CAGE | 50X56X44mm | | | | ♦ |
| 24 | K21.06773 | 970 262 0994 | | 1 | 4./5.VİTES ARA SEKMAN | RETAINING RING | 2,88mm | | ♦ | ♦ | |

NOTES :
Parts encoded alphabetic and numaric are used together.

NOTLAR :
Alfabetik ve rakam ile kodlanan parçalar birlikte kullanılır.





Original parts names, oem numbers, symbols and descriptions used in this catalogue are for reference purposes only.

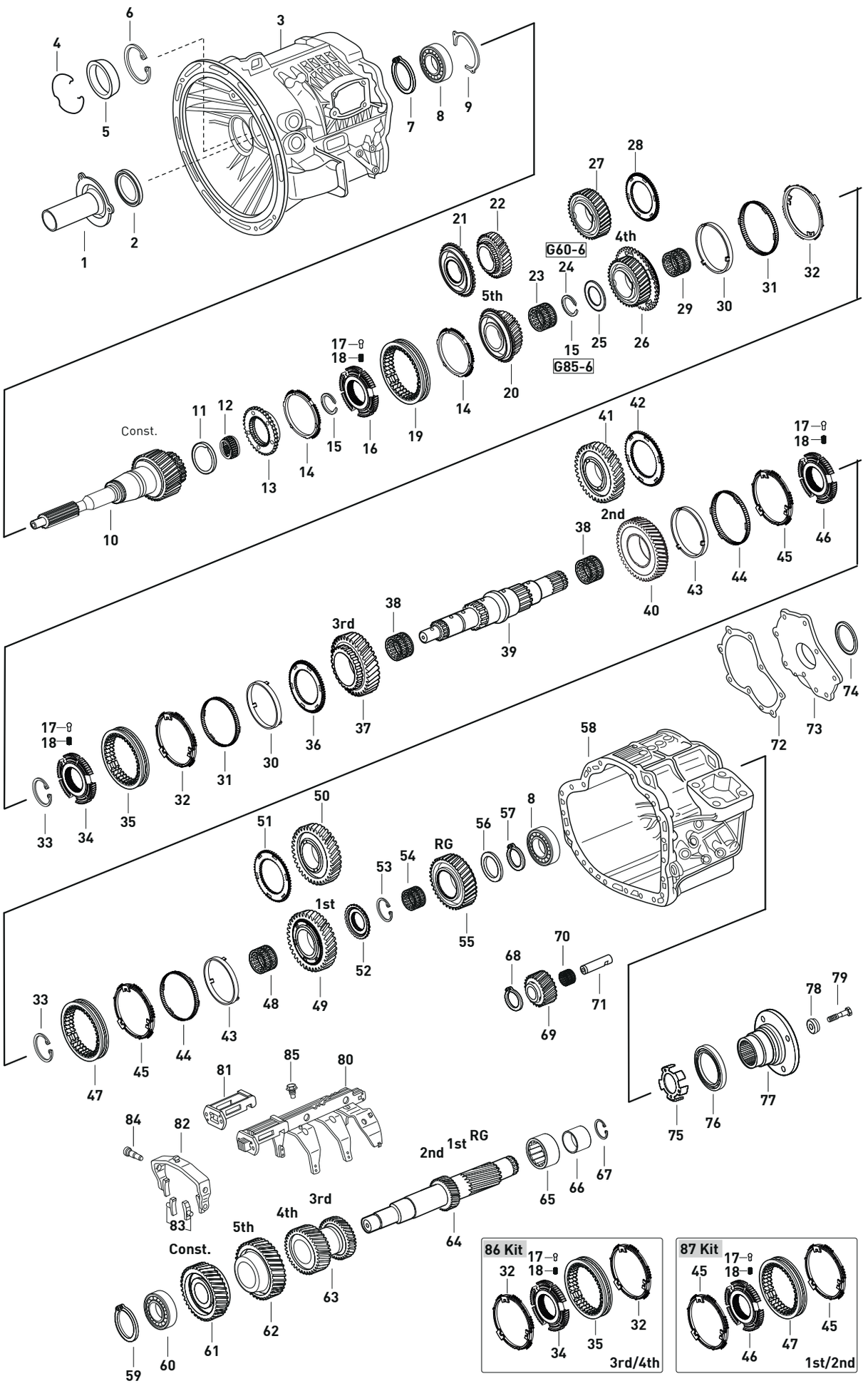




Original parts names, oem numbers, symbols and descriptions used in this catalogue are for reference purposes only.

| Fig. | Kacmaz No | Oem No | Oem Old No | Pcs. | Ürün Tanımı | Description | Sizes | Not | G60 - 6 | G6 - 60 | G85 - 6 |
|---|---|---|---|---|---|---|---|---|---|---|---|
| 24 | K21.06774 | 970 262 0894 | | 1 | 4./5.VİTES ARA SEKMAN | RETAINING RING | 2,92mm | | ♦ | ♦ | |
| 24 | K21.06775 | 970 262 0794 | | 1 | 4./5.VİTES ARA SEKMAN | RETAINING RING | 2,96mm | | ♦ | ♦ | |
| 24 | K21.06776 | 970 262 0694 | | 1 | 4./5.VİTES ARA SEKMAN | RETAINING RING | 3,00mm | | ♦ | ♦ | |
| 24 | K21.06961 | 970 262 1594 | | 1 | 4./5.VİTES ARA SEKMAN | RETAINING RING | 3,05mm | | ♦ | ♦ | |
| 24 | K21.06777 | 970 262 1694 | | 1 | 4./5.VİTES ARA SEKMAN | RETAINING RING | 3,10mm | | ♦ | ♦ | |
| 24 | K21.06778 | 970 262 1794 | | 1 | 4./5.VİTES ARA SEKMAN | RETAINING RING | 3,15mm | | ♦ | ♦ | |
| 25 | K21.06781 | 970 262 0162 | | 1 | 4./.5.VİTES ARA PUL | THRUST WASHER | | | ♦ | ♦ | |
| 25 | K21.06782 | 976 262 0062 | | 1 | 4./.6.VİTES ARA PUL | THRUST WASHER | | (K) | | | ♦ |
| 25 | K21.06783 | 976 262 0462 | (695 262 0062) | 1 | 4./.6.VİTES ARA PUL | THRUST WASHER | | (L) | | | ♦ |
| 26 | K21.06632 | 970 260 2344 | (970 260 0914) | 1 | 4.VİTES DİŞLİSİ 35 DİŞ | GEAR 4th 35 T. | | | | ♦ | |
| 27 | K21.06623 | 970 262 1114 | (970 262 1214) | 1 | 4.VİTES DİŞLİSİ 35 DİŞ | GEAR 4th 35 T. | | | ♦ | ♦ | ♦ |
| | | | (695 262 0014) | | | | | | | | |
| | | | (975 262 0114) | | | | | | | | |
| 28 | K21.06616 | 970 262 2434 | | 1 | 4.VİTES SENKROMENÇ 66 DİŞ | ENGAGING RING 66 T. | | | ♦ | ♦ | ♦ |
| 29 | K21.06784 | 018 981 9510 | (017 981 5710) | 1 | 4.VİTES MASURA BİLYA | NEEDLE CAGE | 72X80X31mm | | ♦ | ♦ | ♦ |
| 30 | K21.06661 | 970 262 3537 | (970 262 1937) | 2 | 3./4.VİTES FRENLEME | SYNCHRONIZING CONE | | | ♦ | ♦ | ♦ |
| 31 | K21.06663 | 970 262 3134 | (970 262 1234) | 2 | 3./4.VİTES FRENLEME | SYNCHRONIZING CONE | | | ♦ | ♦ | ♦ |
| | | | (970 262 2934) | | | | | | | | |
| 32 | K21.06597 | 970 262 3937 | (970 262 2237) | 2 | 3./4.VİTES FRENLEME | SYNCHRONIZING CONE | | | ♦ | ♦ | ♦ |
| | | | (970 262 5937) | | | | | | | | |
| | | | (970 262 3237) | | | | | | | | |
| 33 | K21.06785 | 010 994 5841 | | 2 | 1.-2./3.-4.VİT.YILDIZ DİŞLİ SEKMANI | RETAINING RING | 2,19mm | | ♦ | ♦ | ♦ |
| 33 | K21.06786 | 010 994 5941 | | 2 | 1.-2./3.-4.VİT.YILDIZ DİŞLİ SEKMANI | RETAINING RING | 2,24mm | | ♦ | ♦ | ♦ |
| 33 | K21.06787 | 970 994 4441 | | 2 | 1.-2./3.-4.VİT.YILDIZ DİŞLİ SEKMANI | RETAINING RING | 2,29mm | | ♦ | ♦ | ♦ |
| 33 | K21.06788 | 970 994 1041 | | 2 | 1.-2./3.-4.VİT.YILDIZ DİŞLİ SEKMANI | RETAINING RING | 2,34mm | | ♦ | ♦ | ♦ |
| 33 | K21.06789 | 970 994 1141 | | 2 | 1.-2./3.-4.VİT.YILDIZ DİŞLİ SEKMANI | RETAINING RING | 2,39mm | | ♦ | ♦ | ♦ |
| 33 | K21.06790 | 970 994 1241 | | 2 | 1.-2./3.-4.VİT.YILDIZ DİŞLİ SEKMANI | RETAINING RING | 2,44mm | | ♦ | ♦ | ♦ |
| 33 | K21.06791 | 000471 078000 | | 2 | 1.-2./3.-4.VİT.YILDIZ DİŞLİ SEKMANI | RETAINING RING | 2,50mm | | ♦ | ♦ | ♦ |
| 33 | K21.06792 | 976 262 0494 | | 2 | 1.-2./3.-4.VİT.YILDIZ DİŞLİ SEKMANI | RETAINING RING | 2,88mm | | ♦ | ♦ | ♦ |
| 34 | K21.06608 | 970 262 2535 | (694 262 0335) | 1 | 3./4.VİTES YILDIZ DİŞLİ | SYNCHRONIZER HUB | | | ♦ | ♦ | ♦ |
| | | | (692 262 0035) | | | | | | | | |
| 35 | K21.06613 | 970 262 3423 | (694 262 0123) | 1 | 3./4.VİTES HALKA | ENGAGING SLEEVE | | | ♦ | ♦ | ♦ |
| | | | (970 262 3023) | | | | | | | | |
| | | | (975 262 0023) | | | | | | | | |
| 36 | K21.06617 | 970 262 2534 | (971 262 1562) | 1 | 3.VİTES SENKROMENÇ 66 DİŞ | ENGAGING RING 66 T. | | | ♦ | ♦ | ♦ |
| | | | (974 262 0034) | | | | | | | | |
| 37 | K21.06624 | 970 262 1213 | (694 262 0013) | 1 | 3.VİTES DİŞLİSİ 47 DİŞ | GEAR 3rd 47 T. | | | ♦ | ♦ | ♦ |
| | | | (970 262 1113) | | | | | | | | |
| | | | (975 262 0113) | | | | | | | | |
| 38 | K21.06685 | 018 981 9610 | (018 981 5810) | 2 | 2./3.VİTES MASURA BİLYA | NEEDLE CAGE | 86X94X44mm | | ♦ | ♦ | ♦ |
| | | | (023 981 3810) | | | | | | | | |
| 39 | K21.06664 | 970 262 0405 | (970 262 0205) | 1 | KAMALI MİL | MAIN SHAFT | | (1) | ♦ | ♦ | |
| | | | (970 262 1005) | | | | | | | | |
| 39 | | 970 262 0105 | | 1 | KAMALI MİL | MAIN SHAFT | | (2) | | ♦ | |
| 39 | K21.06846 | 976 262 1205 | | 1 | KAMALI MİL | MAIN SHAFT | | (K) | | | ♦ |
| 39 | K21.06665 | 976 262 1705 | (693 262 0005) | 1 | KAMALI MİL | MAIN SHAFT | | (L) | | | ♦ |
| | | | (976 262 1405) | | | | | | | | |
| 39 | | 976 262 3105 | | 1 | KAMALI MİL | MAIN SHAFT | | | | | ♦ |
| 40 | K21.06688 | 970 260 2544 | | 1 | 2.VİTES DİŞLİSİ 45 DİŞ | GEAR 2nd 45 T. | | | | ♦ | |
| 41 | K21.06628 | 970 262 1012 | (695 262 0012) | 1 | 2.VİTES DİŞLİSİ 45 DİŞ | GEAR 2nd 45 T. | | | ♦ | ♦ | ♦ |
| | | | (970 262 1312) | | | | | | | | |
| | | | (695 262 0112) | | | | | | | | |
| 42 | K21.06603 | 970 262 2334 | (694 262 0334) | 1 | 2.VİTES SENKROMENÇ 57 DİŞ | ENGAGING RING 57 T. | | | ♦ | ♦ | ♦ |

NOTES :
Parts encoded alphabetic and numaric are used together.

NOTLAR :
Alfabetik ve rakam ile kodlanan parçalar birlikte kullanılır.

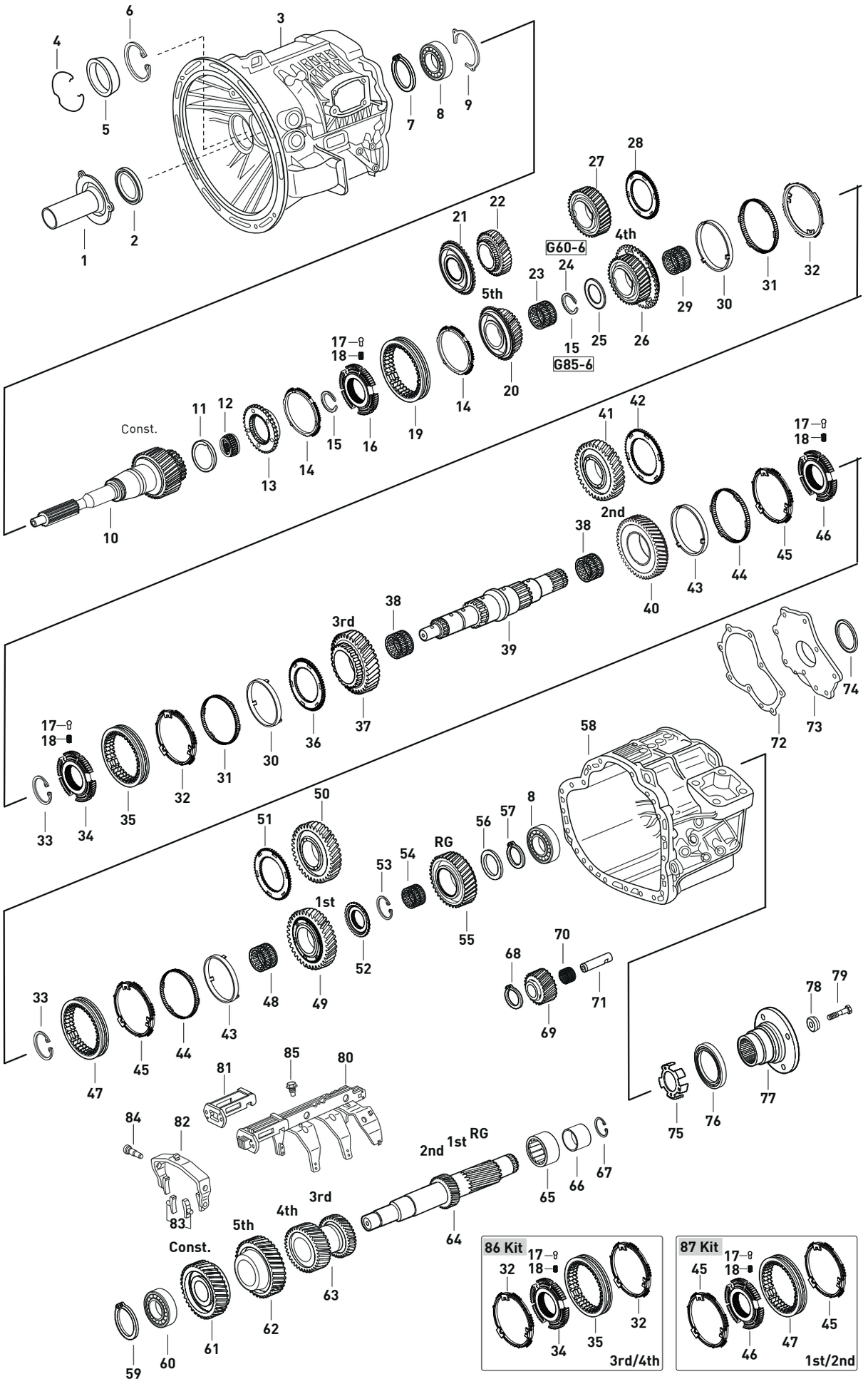




Original parts names, oem numbers, symbols and descriptions used in this catalogue are for reference purposes only.

| Fig. | Kacmaz No | Oem No | Oem Old No | Pcs. | Ürün Tanımı | Description | Sizes | Not | G60 - 6 | G6 - 60 | G85 - 6 |
|---|---|---|---|---|---|---|---|---|---|---|---|
| 43 | K21.06658 | 970 262 3437 | (970 262 0237) | 2 | 1./2.VİTES FRENLEME | SYNCHRONIZING CONE | | | ♦ | ♦ | ♦ |
| 44 | K21.06660 | 970 262 3034 | (970 262 0134) | 2 | 1./2.VİTES FRENLEME | SYNCHRONIZING CONE | | | ♦ | ♦ | ♦ |
| | | | (970 262 2834) | | | | | | | | |
| 45 | K21.06598 | 970 262 3837 | (970 262 6037) | 2 | 1./2.VİTES FRENLEME | SYNCHRONIZING CONE | | | ♦ | ♦ | ♦ |
| | | | (970 262 3137) | | | | | | | | |
| 46 | K21.06607 | 970 262 2435 | (693 262 0035) | 1 | 1./2.VİTES YILDIZ DİŞLİ | SYNCHRONIZER HUB | | | ♦ | ♦ | ♦ |
| | | | (694 262 0235) | | | | | | | | |
| 47 | K21.06615 | 970 262 3323 | (970 262 3723) | 1 | 1./2.VİTES HALKA | ENGAGING SLEEVE | | | ♦ | ♦ | ♦ |
| | | | (694 262 0023) | | | | | | | | |
| | | | (975 262 0223) | | | | | | | | |
| 48 | K21.06794 | 018 981 5310 | (017 981 6210) | 1 | 1.VİTES MASURA BİLYA | NEEDLE BEARING | 72X80X40mm | | ♦ | ♦ | ♦ |
| | | | (017 981 5010) | | | | | | | | |
| 49 | K21.06689 | 970 260 0344 | (970 260 3644) | 1 | 1.VİTES DİŞLİSİ 50 DİŞ | GEAR 1st 50 T. | | | ♦ | ♦ | |
| 50 | K21.06627 | 695 262 0011 | (976 262 1411) | 1 | 1.VİTES DİŞLİSİ 50 DİŞ | GEAR 1st 50 T. | | | ♦ | ♦ | ♦ |
| | | | (970 262 0311) | | | | | | | | |
| | | | (970 262 0511) | | | | | | | | |
| | | | (975 262 0111) | | | | | | | | |
| 51 | K21.06604 | 970 262 1734 | (694 262 0234) | 1 | 1.VİTES SENKROMENÇ | ENGAGING RING | | | ♦ | ♦ | ♦ |
| | | | (975 262 0334) | | | | | | | | |
| 52 | K21.06612 | 970 262 0835 | (693 262 0135) | 1 | GERİ VİTES YILDIZ DİŞLİ 27 DİŞ | SYNCHRONIZER HUB 27 T. | | | ♦ | ♦ | ♦ |
| | | | (694 262 0035) | | | | | | | | |
| | | | (975 262 0135) | | | | | | | | |
| 53 | K21.06795 | 990 262 7100 | (970 262 0194) | 1 | GERİ VİTES YILDIZ DİŞLİ SEKMANI | RETAINING RING | 1,88mm | | ♦ | ♦ | ♦ |
| 53 | K21.06796 | 990 262 7200 | (970 262 0294) | 1 | GERİ VİTES YILDIZ DİŞLİ SEKMANI | RETAINING RING | 1,92mm | | ♦ | ♦ | ♦ |
| 53 | K21.06797 | 970 262 0394 | | 1 | GERİ VİTES YILDIZ DİŞLİ SEKMANI | RETAINING RING | 1,96mm | | ♦ | ♦ | ♦ |
| 53 | K21.06798 | 970 262 0494 | | 1 | GERİ VİTES YILDIZ DİŞLİ SEKMANI | RETAINING RING | 2,00mm | | ♦ | ♦ | ♦ |
| 53 | K21.06799 | 970 994 0040 | | 1 | GERİ VİTES YILDIZ DİŞLİ SEKMANI | RETAINING RING | 2,04mm | | ♦ | ♦ | ♦ |
| 53 | K21.06800 | 970 994 0140 | | 1 | GERİ VİTES YILDIZ DİŞLİ SEKMANI | RETAINING RING | 2,08mm | | ♦ | ♦ | ♦ |
| 54 | K21.06801 | 019 981 5710 | (019 981 5310) | 1 | GERİ VİTES MASURA BİLYA | NEEDLE BEARING | 63X71X50,5mm | (1) | ♦ | ♦ | ♦ |
| | | | (023 981 2910) | | | | | | | | |
| 54 | K21.06802 | 018 981 5610 | | 1 | GERİ VİTES MASURA BİLYA | NEEDLE BEARING | 63X71X44mm | (2) | | ♦ | ♦ |
| 55 | K21.06641 | 970 262 0533 | (970 262 0433) | 1 | GERİ VİTES DİŞLİSİ 47 DİŞ | REVERSE GEAR 47 T. | | | ♦ | ♦ | ♦ |
| | | | (695 262 0233) | | | | | | | | |
| | | | (693 262 0033) | | | | | | | | |
| | | | (975 262 0133) | | | | | | | | |
| 56 | K21.06893 | 970 262 0062 | | 1 | GERİ VİTES DİŞLİ PULU | THRUST WASHER | | (2) | | ♦ | ♦ |
| 57 | K21.06803 | 970 994 3041 | | 1 | KAMALI MİL ARKA BİLYA SEKMANI | RETAINING RING | 3,90mm | | ♦ | ♦ | ♦ |
| 57 | K21.06804 | 970 994 3641 | | 1 | KAMALI MİL ARKA BİLYA SEKMANI | RETAINING RING | 4,00mm | | ♦ | ♦ | ♦ |
| 58 | | 694 261 0103 | | 1 | ŞANZIMAN ORTA GÖVDE | HOUSING | | | ♦ | | |
| 58 | | 976 261 3103 | | 1 | ŞANZIMAN ORTA GÖVDE | HOUSING | | | | ♦ | ♦ |
| 58 | | 970 261 1303 | | 1 | ŞANZIMAN ORTA GÖVDE | HOUSING | | | | ♦ | |
| 58 | | 976 261 3503 | | 1 | ŞANZIMAN ORTA GÖVDE | HOUSING | | | | | ♦ |
| 58 | | 970 261 1803 | | 1 | ŞANZIMAN ORTA GÖVDE | HOUSING | | | | | ♦ |
| 59 | K21.06805 | 970 994 4341 | | 1 | GRUP MİLİ ÖN BİLYA SEKMANI | RETAINING RING | 2,10mm | | ♦ | ♦ | ♦ |
| 59 | K21.06806 | 970 994 2241 | | 1 | GRUP MİLİ ÖN BİLYA SEKMANI | RETAINING RING | 2,20mm | | ♦ | ♦ | ♦ |
| 59 | K21.06807 | 970 994 2441 | | 1 | GRUP MİLİ ÖN BİLYA SEKMANI | RETAINING RING | 2,30mm | | ♦ | ♦ | ♦ |
| 59 | K21.06808 | 970 994 2641 | | 1 | GRUP MİLİ ÖN BİLYA SEKMANI | RETAINING RING | 2,40mm | | ♦ | ♦ | ♦ |
| 59 | K21.06809 | 900055 045300 | | 1 | GRUP MİLİ ÖN BİLYA SEKMANI | RETAINING RING | 2,50mm | | ♦ | ♦ | ♦ |
| 60 | K21.06810 | 010 981 0525 | (009 981 5225) | 1 | GRUP MİLİ ÖN BİLYA | ROLLER BEARING | 45X100X25mm | | ♦ | ♦ | ♦ |
| | | | (007 981 2925) | | | | | | | | |
| | | | (000 981 0525) | | | | | | | | |
| 61 | K21.06631 | 970 263 0410 | (970 263 0610) | 1 | PRİZDİREK KARŞILIĞI 53 DİŞ | CONSTANT GEAR 53 T. | | | ♦ | ♦ | |
| | | | (694 263 0010) | | | | | | | | |

NOTES :
Parts encoded alphabetic and numaric are used together.

NOTLAR :
Alfabetik ve rakam ile kodlanan parçalar birlikte kullanılır.





Original parts names, oem numbers, symbols and descriptions used in this catalogue are for reference purposes only.

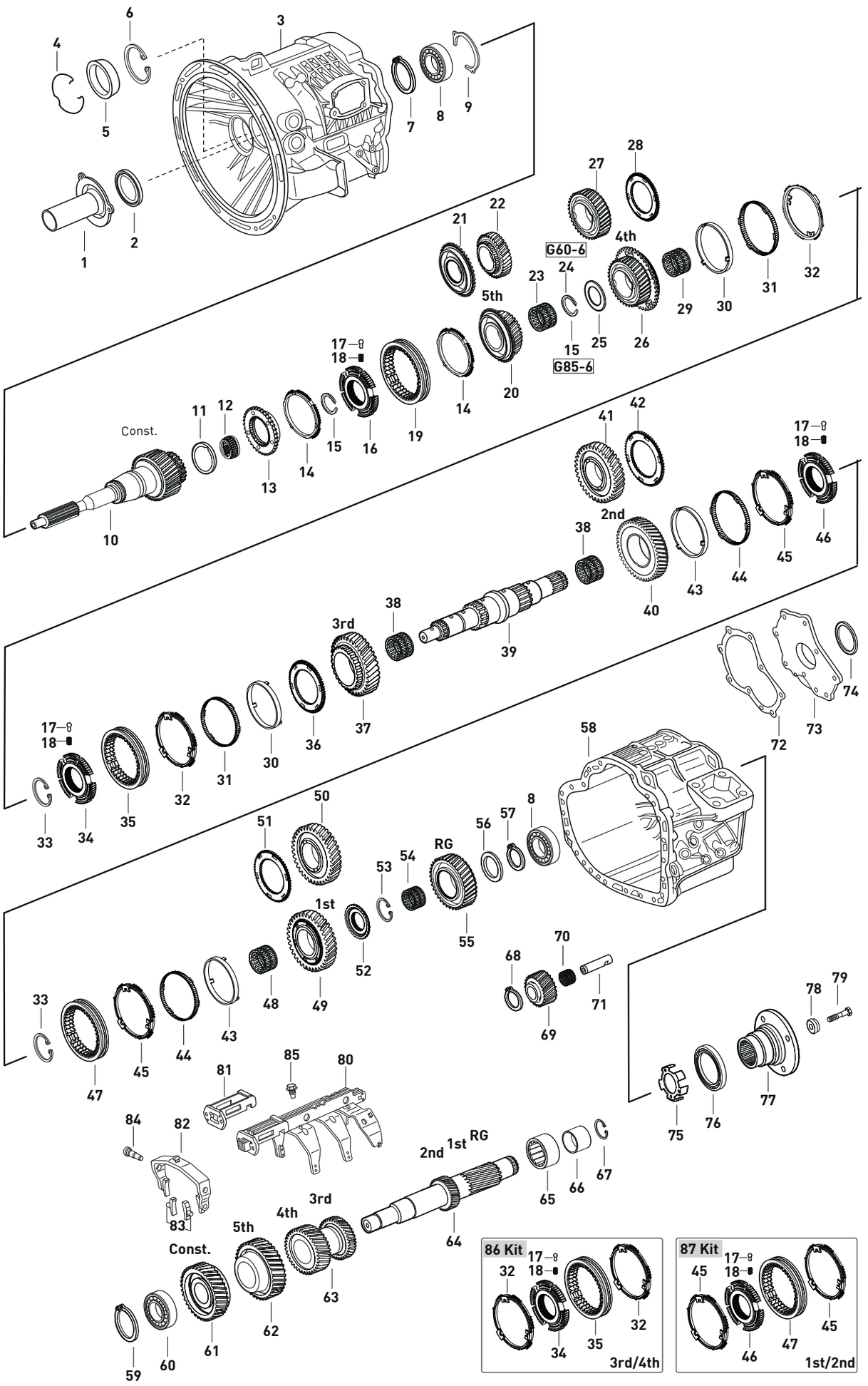




Original parts names, oem numbers, symbols and descriptions used in this catalogue are for reference purposes only.

| Fig. | Kacmaz No | Oem No | Oem Old No | Pcs. | Ürün Tanımı | Description | Sizes | Not | G60 - 6 | G6 - 60 | G85 - 6 |
|---|---|---|---|---|---|---|---|---|---|---|---|
| 61 | K21.06630 | 976 263 1210 | (976 263 1110) | 1 | PRİZDİREK KARŞILIĞI 45 DİŞ | CONSTANT GEAR 45 T. | | | | | ♦ |
| | | | (693 263 0010) | | | | | | | | |
| | | | (695 263 0010) | | | | | | | | |
| 62 | K21.06625 | 970 263 0515 | (970 263 0615) | 1 | 5.VİTES DİŞLİ KARŞILIĞI 45 DİŞ | GEAR 5th 45 T. | | | ♦ | ♦ | |
| | | | (694 263 0015) | | | | | | | | |
| 62 | K21.06620 | 976 263 0216 | (976 263 0016) | 1 | 6.VİTES DİŞLİ KARŞILIĞI 53 DİŞ | GEAR 6th 53 T. | | | | | ♦ |
| | | | (695 263 0016) | | | | | | | | |
| 63 | K21.06622 | 970 263 0713 | (970 263 0613) | 1 | 3./4.VİTES DİŞ.KARŞILIĞI 33/38 DİŞ | DOUBLE GEAR 33/38 T. | | | ♦ | ♦ | ♦ |
| | | | (694 263 0013) | | | | | | | | |
| | | | (975 263 0113) | | | | | | | | |
| 64 | K21.06629 | 970 263 0702 | (970 263 0802) | 1 | GRUP MİLİ 12/19 DİŞ | COUNTERSHAFT 12/19 T. | | | ♦ | ♦ | ♦ |
| | | | (694 263 0002) | | | | | | | | |
| | | | (975 263 0102) | | | | | | | | |
| 65 | K21.06723 | 002 981 7512 | (010 981 4901) | 1 | GRUP MİLİ ARKA BİLYA | ROLLER BEARING | 47,5X80,1X26,4mm | | ♦ | ♦ | ♦ |
| | | | (010 981 8401) | | | | | | | | |
| 66 | K21.06836 | 970 981 0081 | | 1 | GRUP MİLİ ARKA BİLYA BURCU | BUSH | 47,5X37X26mm | | ♦ | ♦ | ♦ |
| 67 | K21.06815 | 912009 037100 | | 1 | GRUP MİLİ ARKA BİLYA BURÇ SEKMANI | RETAINING RING | 1,50mm | | ♦ | ♦ | ♦ |
| 68 | K21.06816 | 900055 032310 | | 1 | KÜÇÜK GERİ VİTES DİŞLİ SEKMANI | RETAINING RING | 32X1,5mm | | ♦ | ♦ | ♦ |
| 69 | K21.06640 | 970 263 0331 | (694 263 0031) | 1 | KÜÇÜK GERİ VİTES DİŞLİ 21 DİŞ | REVERSE IDLER GEAR 21 T. | | | ♦ | ♦ | ♦ |
| | | | (970 263 0031) | | | | | | | | |
| 70 | K21.06812 | 018 981 5710 | (017 981 6110) | 1 | KÜÇÜK GERİ VİTES MASURA BİLYA | NEEDLE CAGE | 32X40X49,3mm | | ♦ | ♦ | ♦ |
| | | | (017 981 6010) | | | | | | | | |
| 71 | K21.06833 | 694 263 0030 | (970 263 0230) | 1 | KÜÇÜK GERİ VİTES PİMİ | PIN | | | ♦ | ♦ | ♦ |
| 72 | K21.06945 | 002 989 7120 | (970 261 0280) | 1 | ARKA KAPAK CONTASI | GASKET | | | ♦ | ♦ | ♦ |
| | | | (970 261 0380) | | | | | | | | |
| 73 | | 970 261 0533 | | 1 | ARKA KAPAK | COVER | | | ♦ | ♦ | ♦ |
| 74 | K21.06837 | 970 263 0350 | (694 263 0050) | 1 | GRUP MİLİ ARKA BİLYA PLASTİK BURCU | PLASTIC BUSHING | | | ♦ | ♦ | ♦ |
| | | | (970 263 0050) | | | | | | | | |
| 75 | K21.06854 | 970 262 0128 | | 1 | DEVİR SENSÖR SACI | PULSE STAR | | | ♦ | ♦ | ♦ |
| 76 | K21.06813 | 024 997 3247 | (024 997 0447) | 1 | ŞANZIMAN ARKA KEÇE | OIL SEAL | 70X88X10mm | | ♦ | ♦ | ♦ |
| 77 | K21.06814 | 970 262 1045 | (970 262 0745) | 1 | ŞANZIMAN FLANŞI | COMPANION FLANGE | | | ♦ | ♦ | ♦ |
| 77 | | 970 262 0545 | | 1 | ŞANZIMAN FLANŞI | COMPANION FLANGE | | | ♦ | ♦ | |
| 77 | | 970 262 1145 | | 1 | ŞANZIMAN FLANŞI | COMPANION FLANGE | | | ♦ | | ♦ |
| 77 | | 970 262 1345 | | 1 | ŞANZIMAN FLANŞI | COMPANION FLANGE | | | | | ♦ |
| 77 | | 976 262 1545 | | 1 | ŞANZIMAN FLANŞI | COMPANION FLANGE | | | ♦ | | ♦ |
| 77 | | 976 262 1845 | | 1 | ŞANZIMAN FLANŞI | COMPANION FLANGE | | | ♦ | ♦ | ♦ |
| 77 | | 976 262 1945 | | 1 | ŞANZIMAN FLANŞI | COMPANION FLANGE | | | ♦ | ♦ | ♦ |
| 78 | K21.06817 | 383 282 0262 | (970 262 0362) | 1 | ŞANZIMAN FLANŞ ALIN PULU | THRUST WASHER | | | ♦ | ♦ | ♦ |
| 79 | K21.06818 | 000000 005536 | (910105 016005) | 1 | ŞANZIMAN FLANŞ ALIN VİDASI | SCREW | M16X60 | | ♦ | ♦ | ♦ |
| 80 | | 970 260 9031 | (970 260 4631) | 1 | VİTES HİLAL TAKIMI | SHIFTING FORK COMPLETE | | | ♦ | ♦ | |
| 80 | | 970 260 9131 | (970 260 5131) | 1 | VİTES HİLAL TAKIMI | SHIFTING FORK COMPLETE | | | | | ♦ |
| | | | (976 260 1331) | | | | | | | | |
| | | | (976 260 1531) | | | | | | | | |
| 81 | | 970 260 0446 | | 1 | VİTES HİLAL PLEYTİ | PLATE | | | ♦ | ♦ | ♦ |
| 82 | | 976 260 2530 | (976 265 0402) | 1 | OVARDİRE VİTES HİLALİ | SHIFTING FORK | | | | | ♦ |
| | | | (976 260 0130) | | | | | | | | |
| | | | (976 265 0202) | | | | | | | | |
| 83 | K21.06834 | 976 265 0049 | (947 265 0849) | 2 | HİLAL PABUCU | SLIDING PAD | | | | | ♦ |
| 84 | K21.04308 | 960 265 0874 | (945 265 1374) | 1 | HİLAL CİVATASI | PIN | | | | | ♦ |
| | | | (960 265 0674) | | | | | | | | |
| 85 | K21.06946 | 000 260 0554 | (901 260 1854) | 4 | HİLAL PİM CİVATASI | PIN | | | ♦ | ♦ | ♦ |
| 86 | K21.06955 | 970 260 2944 | | Kit | 3./4.VİTES SENKROMENÇ KİT | SYNCH. KIT 3rd/4th | | | ♦ | ♦ | ♦ |
| 87 | K21.06954 | 970 260 2844 | | Kit | 1./2.VİTES SENKROMENÇ KİT | SYNCH. KIT 1st/2nd | | | ♦ | ♦ | ♦ |

NOTES :
Parts encoded alphabetic and numaric are used together.

NOTLAR :
Alfabetik ve rakam ile kodlanan parçalar birlikte kullanılır.





Original parts names, oem numbers, symbols and descriptions used in this catalogue are for reference purposes only.

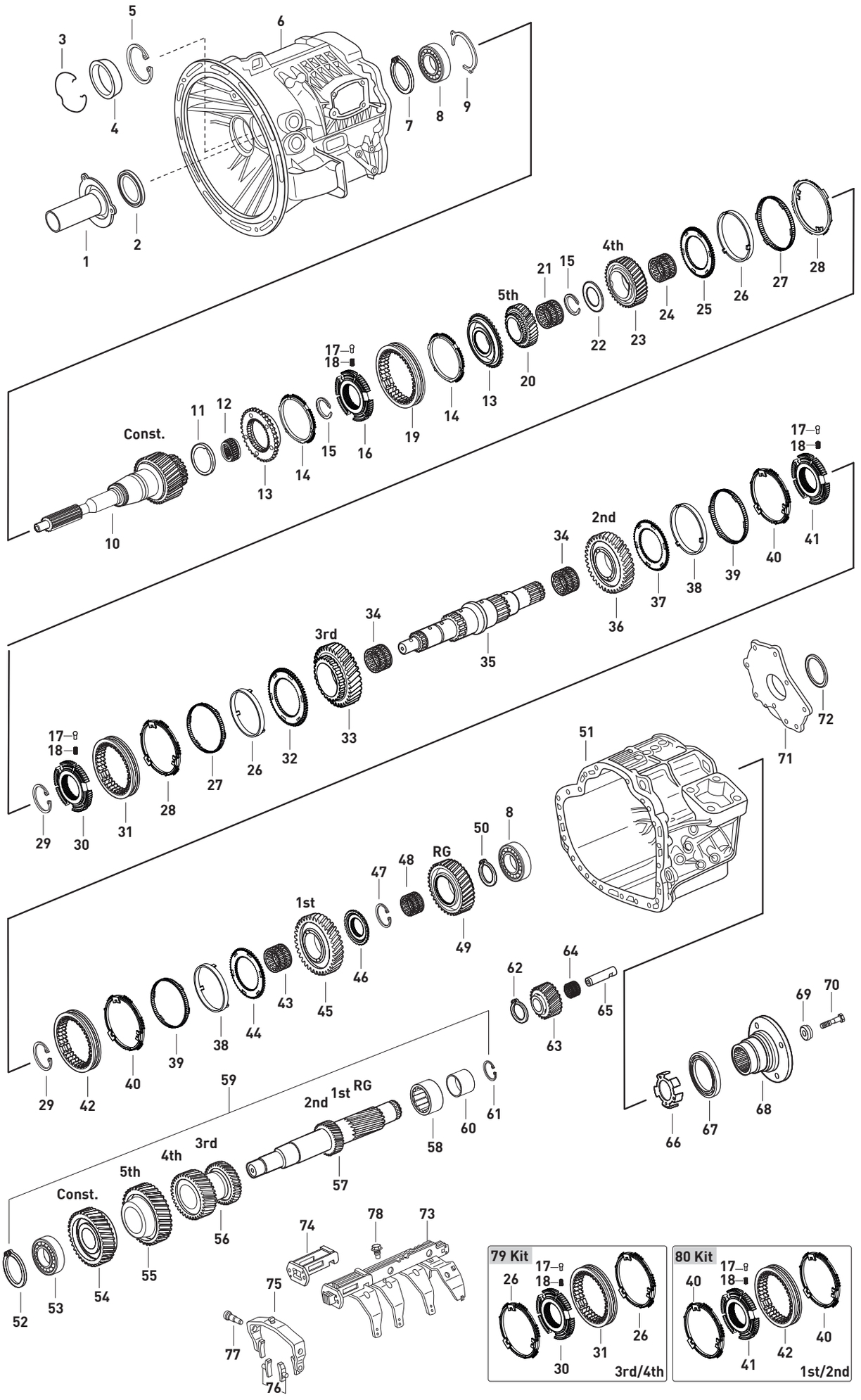


Original parts names, oem numbers, symbols and descriptions used in this catalogue are for reference purposes only.

| Fig. | Kacmaz No | Oem No | Oem Old No | Pcs. | Ürün Tanımı | Description | Sizes | Not | G71 - 6 | G90 - 6 |
|---|---|---|---|---|---|---|---|---|---|---|
| 1 | K21.06853 | 970 261 0043 | | 1 | PRİZDİREK KEÇE KAPAĞI | COVER | | | ♦ | ♦ |
| 2 | K21.06724 | 013 997 2646 | | 1 | PRİZDİREK ÖN KEÇE | OIL SEAL | 55X80X8mm | | ♦ | ♦ |
| 3 | K21.06866 | 970 263 0193 | | 1 | G.MİLİ ÖN BİLYA KAPAK SEKMANI | RETAINING RING | | | ♦ | ♦ |
| 4 | K21.06867 | 970 261 0833 | | 1 | GRUP MİLİ ÖN BİLYA KAPAĞI | COVER | | | ♦ | ♦ |
| 5 | K21.06868 | 010 994 8241 | | 1 | G.MİLİ ÖN BİLYA KAPAK SEKMANI | RETAINING RING | 3,88mm | | ♦ | ♦ |
| 5 | K21.06869 | 010 994 8441 | | 1 | G.MİLİ ÖN BİLYA KAPAK SEKMANI | RETAINING RING | 3,95mm | | ♦ | ♦ |
| 5 | K21.06870 | 010 994 8541 | | 1 | G.MİLİ ÖN BİLYA KAPAK SEKMANI | RETAINING RING | 4,00mm | | ♦ | ♦ |
| 5 | K21.06871 | 011 994 2141 | | 1 | G.MİLİ ÖN BİLYA KAPAK SEKMANI | RETAINING RING | 4,10mm | | ♦ | ♦ |
| 6 | | 967 261 0401 | | 1 | ŞANZIMAN ÖN GÖVDE | HOUSING | | | ♦ | |
| 6 | | 967 261 2501 | (967 261 0301) | 1 | ŞANZIMAN ÖN GÖVDE | HOUSING | | | | ♦ |
| 7 | K21.06731 | 970 994 0641 | | 1 | PRİZDİREK ÖN BİLYA SEKMANI | RETAINING RING | 2,80mm | | ♦ | ♦ |
| 7 | K21.06732 | 970 994 0741 | | 1 | PRİZDİREK ÖN BİLYA SEKMANI | RETAINING RING | 2,84mm | | ♦ | ♦ |
| 7 | K21.06733 | 970 994 0841 | | 1 | PRİZDİREK ÖN BİLYA SEKMANI | RETAINING RING | 2,88mm | | ♦ | ♦ |
| 7 | K21.06734 | 970 994 3241 | | 1 | PRİZDİREK ÖN BİLYA SEKMANI | RETAINING RING | 2,92mm | | ♦ | ♦ |
| 7 | K21.06735 | 970 994 3341 | | 1 | PRİZDİREK ÖN BİLYA SEKMANI | RETAINING RING | 2,96mm | | ♦ | ♦ |
| 7 | K21.06736 | 970 994 3441 | | 1 | PRİZDİREK ÖN BİLYA SEKMANI | RETAINING RING | 3,00mm | | ♦ | ♦ |
| 7 | K21.06737 | 011 994 2541 | | 1 | PRİZDİREK ÖN BİLYA SEKMANI | RETAINING RING | 3,05mm | | ♦ | ♦ |
| 7 | K21.06738 | 011 994 2641 | | 1 | PRİZDİREK ÖN BİLYA SEKMANI | RETAINING RING | 3,10mm | | ♦ | ♦ |
| 8 | K21.06721 | 009 981 6425 | (009 981 7625) | 2 | PRİZ.ÖN BİLYA VE K.MİL ARKA BİLYA | ROLLER BEARING | 130X55X31mm | | ♦ | ♦ |
| | | | (011 981 0225) | | | | | | | |
| 9 | K21.06872 | 010 994 7241 | | 1 | PRİZ.ÖN BİLYA SABİTLEME SEKMANI | RETAINING RING | 3,85mm | | ♦ | ♦ |
| 9 | K21.06873 | 010 994 7341 | | 1 | PRİZ.ÖN BİLYA SABİTLEME SEKMANI | RETAINING RING | 3,90mm | | ♦ | ♦ |
| 9 | K21.06874 | 010 994 7441 | | 1 | PRİZ.ÖN BİLYA SABİTLEME SEKMANI | RETAINING RING | 3,95mm | | ♦ | ♦ |
| 9 | K21.06875 | 010 994 7541 | | 1 | PRİZ.ÖN BİLYA SABİTLEME SEKMANI | RETAINING RING | 4,00mm | | ♦ | ♦ |
| 9 | K21.06876 | 011 994 1841 | | 1 | PRİZ.ÖN BİLYA SABİTLEME SEKMANI | RETAINING RING | 4,05mm | | ♦ | ♦ |
| 10 | K21.06722 | 967 262 0502 | (967 262 0602) | 1 | PRİZDİREK 24 DİŞ | INPUT SHAFT 24 T. | | | ♦ | |
| 10 | K21.06709 | 967 262 0702 | (967 262 0802) | 1 | PRİZDİREK 28 DİŞ | INPUT SHAFT 28 T. | | | | ♦ |
| 11 | K21.06877 | 003 990 8982 | | 1 | PRİZDİREK PULU | THRUST WASHER | 4,15mm | | ♦ | ♦ |
| 11 | K21.06878 | 003 990 8882 | | 1 | PRİZDİREK PULU | THRUST WASHER | 4,20mm | | ♦ | ♦ |
| 11 | K21.06879 | 003 990 7682 | | 1 | PRİZDİREK PULU | THRUST WASHER | 4,80mm | | ♦ | ♦ |
| 11 | K21.06880 | 003 990 7482 | | 1 | PRİZDİREK PULU | THRUST WASHER | 4,90mm | | ♦ | ♦ |
| 11 | K21.06881 | 003 990 7282 | | 1 | PRİZDİREK PULU | THRUST WASHER | 5,00mm | | ♦ | ♦ |
| 11 | K21.06882 | 011 990 0782 | | 1 | PRİZDİREK PULU | THRUST WASHER | 5,10mm | | ♦ | ♦ |
| 11 | K21.06883 | 011 990 0982 | | 1 | PRİZDİREK PULU | THRUST WASHER | 5,20mm | | ♦ | ♦ |
| 11 | K21.06884 | 011 990 1182 | | 1 | PRİZDİREK PULU | THRUST WASHER | 5,30mm | | ♦ | ♦ |
| 11 | K21.06885 | 011 990 1382 | | 1 | PRİZDİREK PULU | THRUST WASHER | 5,40mm | | ♦ | ♦ |
| 12 | K21.06764 | 976 981 0012 | | 1 | KAMALI MİL UÇ BİLYA | NEEDLE BEARING | 37X57X30,5mm | | ♦ | ♦ |
| 13 | K21.06704 | 972 262 2134 | (976 262 3534) | 2 | PRİZDİREK/5.VİTES SENKROMENÇ | ENGAGING RING | | | ♦ | ♦ |
| | | | (971 262 0435) | | | | | | | |
| | | | (972 262 0734) | | | | | | | |
| 14 | K21.06599 | 970 262 3037 | (970 262 1437) | 2 | PRİZDİREK/5.VİTES FRENLEME | SYNCHRONIZING CONE | | | ♦ | ♦ |
| | | | (970 262 1537) | | | | | | | |
| 15 | K21.06827 | 976 262 1794 | | 2 | PRİZ./5.VİTES YILDIZ DİŞLİ SEKMANI | RETAINING RING | 1,80mm | | ♦ | ♦ |
| 15 | K21.06828 | 976 262 1694 | | 2 | PRİZ./5.VİTES YILDIZ DİŞLİ SEKMANI | RETAINING RING | 1,85mm | | ♦ | ♦ |
| 15 | K21.06829 | 976 262 1594 | | 2 | PRİZ./5.VİTES YILDIZ DİŞLİ SEKMANI | RETAINING RING | 1,90mm | | ♦ | ♦ |
| 15 | K21.06830 | 976 262 1494 | | 2 | PRİZ./5.VİTES YILDIZ DİŞLİ SEKMANI | RETAINING RING | 1,94mm | | ♦ | ♦ |
| 15 | K21.06886 | 976 262 1394 | | 2 | PRİZ./5.VİTES YILDIZ DİŞLİ SEKMANI | RETAINING RING | 1,98mm | | ♦ | ♦ |
| 15 | K21.06831 | 976 262 1294 | | 2 | PRİZ./5.VİTES YILDIZ DİŞLİ SEKMANI | RETAINING RING | 2,02mm | | ♦ | ♦ |
| 15 | K21.06887 | 976 262 1194 | | 2 | PRİZ./5.VİTES YILDIZ DİŞLİ SEKMANI | RETAINING RING | 2,06mm | | ♦ | ♦ |
| 15 | K21.06832 | 976 262 1094 | | 2 | PRİZ./5.VİTES YILDIZ DİŞLİ SEKMANI | RETAINING RING | 2,10mm | | ♦ | ♦ |
| 16 | K21.06821 | 970 262 2935 | | 1 | PRİZDİREK/5.VİTES YILDIZ DİŞLİ | SYNCHRONIZER HUB | | | ♦ | ♦ |
| 17 | K21.06770 | 970 262 0274 | | 9 | YILDIZ DİŞLİ FİŞEĞİ | PRESSURE PIECE | | | ♦ | ♦ |
| 18 | K21.06771 | 970 993 6401 | (970 993 4601) | 9 | YILDIZ DİŞLİ FİŞEK YAYI | SPRING | | | ♦ | ♦ |

NOTES :

NOTLAR :





Original parts names, oem numbers, symbols and descriptions used in this catalogue are for reference purposes only.

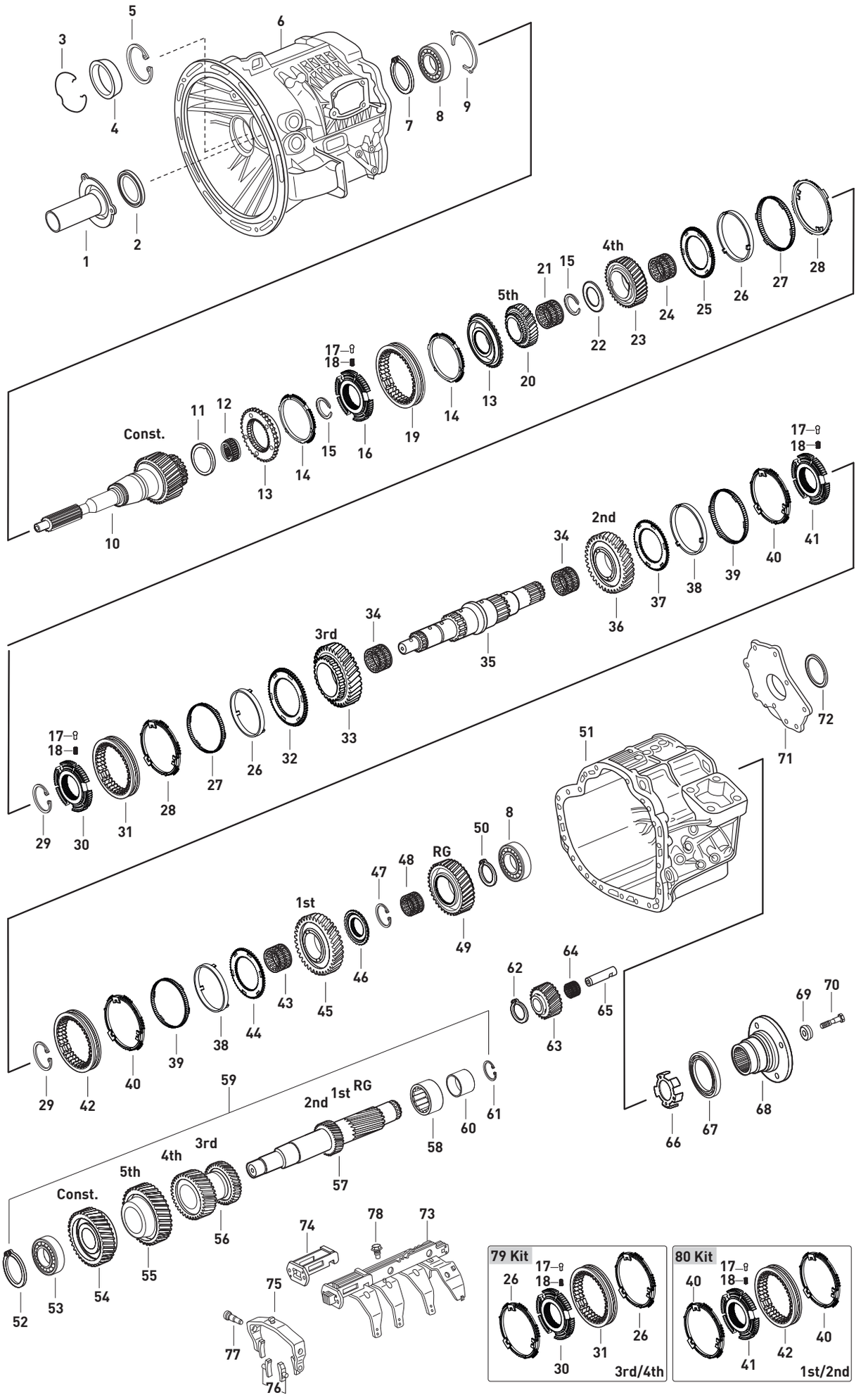


Original parts names, oem numbers, symbols and descriptions used in this catalogue are for reference purposes only.

| Fig. | Kacmaz No | Oem No | Oem Old No | Pcs. | Ürün Tanımı | Description | Sizes | Not | G71 - 6 | G90 - 6 | | |
|---|---|---|---|---|---|---|---|---|---|---|---|---|
| 19 | K21.06705 | 971 262 1323 | (972 262 2023) | 1 | PRİZDİREK VE 5.VİTES HALKA | ENGAGING SLEEVE | | | ♦ | ♦ | | |
| | | | (971 262 0323) | | | | | | | | | |
| | | | (972 262 0523) | | | | | | | | | |
| 20 | K21.06888 | 967 262 0115 | (694 262 0215) | 1 | 5.VİTES DİŞLİSİ 28 DİŞ | GEAR 5th 28 T. | | | ♦ | | | |
| | | | (967 262 0415) | | | | | | | | | |
| 20 | K21.06710 | 976 262 1316 | (695 262 0416) | 1 | 5.VİTES DİŞLİSİ 24 DİŞ | GEAR 5th 24 T. | | | | ♦ | | |
| 21 | K21.06889 | 023 981 0110 | (023 981 3210) | 1 | 5.VİTES MASURA BİLYA | NEEDLE CAGE | | | ♦ | ♦ | | |
| | | | (023 981 4710) | | | | | | | | | |
| 22 | K21.06783 | 976 262 0462 | (695 262 0062) | 1 | 5.VİTES ARA PUL | THRUST WASHER | | | ♦ | ♦ | | |
| 23 | K21.06819 | 976 262 0914 | (970 262 1514) | 1 | 4.VİTES DİŞLİSİ 35 DİŞ | GEAR 4th 35 T. | | | ♦ | ♦ | | |
| | | | (967 262 0114) | | | | | | | | | |
| 24 | K21.06890 | 023 981 0010 | (012 981 5510) | 1 | 4.VİTES MASURA BİLYA | NEEDLE CAGE | | | ♦ | ♦ | | |
| 25 | K21.06826 | 976 262 3234 | (692 262 0034) | 1 | 4.VİTES SENKROMENÇ | ENGAGING RING | | | ♦ | ♦ | | |
| | | | (976 262 3034) | | | | | | | | | |
| 26 | K21.06661 | 970 262 3537 | (970 262 1937) | 2 | 3./4.VİTES FRENLEME | SYNCHRONIZING CONE | | | ♦ | ♦ | | |
| 27 | K21.06663 | 970 262 3134 | (970 262 1234) | 2 | 3./4.VİTES FRENLEME | SYNCHRONIZING CONE | | | ♦ | ♦ | | |
| | | | (970 262 2934) | | | | | | | | | |
| 28 | K21.06597 | 970 262 3937 | (970 262 2237) | 2 | 3./4.VİTES FRENLEME | SYNCHRONIZING CONE | | | ♦ | ♦ | | |
| | | | (970 262 5937) | | | | | | | | | |
| | | | (970 262 3237) | | | | | | | | | |
| 29 | K21.06785 | 010 994 5841 | | 2 | 1.-2./3.-4.VİT.YILDIZ DİŞLİ SEKMANI | RETAINING RING | 2,19mm | | ♦ | ♦ | | |
| 29 | K21.06786 | 010 994 5941 | | 2 | 1.-2./3.-4.VİT.YILDIZ DİŞLİ SEKMANI | RETAINING RING | 2,24mm | | ♦ | ♦ | | |
| 29 | K21.06787 | 970 994 4441 | | 2 | 1.-2./3.-4.VİT.YILDIZ DİŞLİ SEKMANI | RETAINING RING | 2,29mm | | ♦ | ♦ | | |
| 29 | K21.06788 | 970 994 1041 | | 2 | 1.-2./3.-4.VİT.YILDIZ DİŞLİ SEKMANI | RETAINING RING | 2,34mm | | ♦ | ♦ | | |
| 29 | K21.06789 | 970 994 1141 | | 2 | 1.-2./3.-4.VİT.YILDIZ DİŞLİ SEKMANI | RETAINING RING | 2,39mm | | ♦ | ♦ | | |
| 29 | K21.06790 | 970 994 1241 | | 2 | 1.-2./3.-4.VİT.YILDIZ DİŞLİ SEKMANI | RETAINING RING | 2,44mm | | ♦ | ♦ | | |
| 29 | K21.06791 | 000471 078000 | | 2 | 1.-2./3.-4.VİT.YILDIZ DİŞLİ SEKMANI | RETAINING RING | 2,50mm | | ♦ | ♦ | | |
| 29 | K21.06792 | 976 262 0494 | | 2 | 1.-2./3.-4.VİT.YILDIZ DİŞLİ SEKMANI | RETAINING RING | 2,88mm | | ♦ | ♦ | | |
| 30 | K21.06608 | 970 262 2535 | (694 262 0335) | 1 | 3./4.VİTES YILDIZ DİŞLİ | SYNCHRONIZER HUB | | | ♦ | ♦ | | |
| | | | (692 262 0035) | | | | | | | | | |
| | | | (974 262 0035) | | | | | | | | | |
| 31 | K21.06613 | 970 262 3423 | (694 262 0123) | 1 | 3./4.VİTES HALKA | ENGAGING SLEEVE | | | ♦ | ♦ | | |
| | | | (970 262 3023) | | | | | | | | | |
| | | | (975 262 0023) | | | | | | | | | |
| | | | (970 262 2723) | | | | | | | | | |
| | | | (970 262 4323) | | | | | | | | | |
| 32 | K21.06679 | 976 262 3434 | (976 262 2934) | 1 | 3.VİTES SENKROMENÇ | ENGAGING RING | | | ♦ | ♦ | | |
| 33 | K21.06820 | 970 262 1513 | (693 262 0213) | 1 | 3.VİTES DİŞLİSİ 37 DİŞ | GEAR 3rd 37 T. | | | ♦ | ♦ | | |
| | | | (695 262 0013) | | | | | | | | | |
| | | | (970 262 1713) | | | | | | | | | |
| | | | (695 262 0113) | | | | | | | | | |
| 34 | K21.06685 | 018 981 9610 | (018 981 5810) | 2 | 2./3.VİTES MASURA BİLYA | NEEDLE CAGE | 86X94X44mm | | ♦ | ♦ | | |
| | | | (023 981 3810) | | | | | | | | | |
| 35 | K21.06711 | 970 262 0505 | | 1 | KAMALI MİL | MAIN SHAFT | | | ♦ | ♦ | | |
| 36 | K21.06823 | 967 262 0212 | (967 262 0312) | 1 | 2.VİTES DİŞLİSİ 45 DİŞ | GEAR 2nd 45 T. | | | ♦ | ♦ | | |
| | | | (967 262 0412) | | | | | | | | | |
| | | | (967 262 0112) | | | | | | | | | |
| 37 | K21.06603 | 970 262 2334 | (694 262 0334) | 1 | 2.VİTES SENKROMENÇ 57 DİŞ | ENGAGING RING 57 T. | | | ♦ | ♦ | | |
| 38 | K21.06658 | 970 262 3437 | (970 262 0237) | 2 | 1./2.VİTES FRENLEME | SYNCHRONIZING CONE | | | ♦ | ♦ | | |
| 39 | K21.06660 | 970 262 3034 | (970 262 0134) | 2 | 1./2.VİTES FRENLEME | SYNCHRONIZING CONE | | | ♦ | ♦ | | |
| | | | (970 262 2834) | | | | | | | | | |
| 40 | K21.06598 | 970 262 3837 | (970 262 6037) | 2 | 1./2.VİTES FRENLEME | SYNCHRONIZING CONE | | | ♦ | ♦ | | |
| | | | (970 262 3137) | | | | | | | | | |

NOTES :

NOTLAR :





Original parts names, oem numbers, symbols and descriptions used in this catalogue are for reference purposes only.

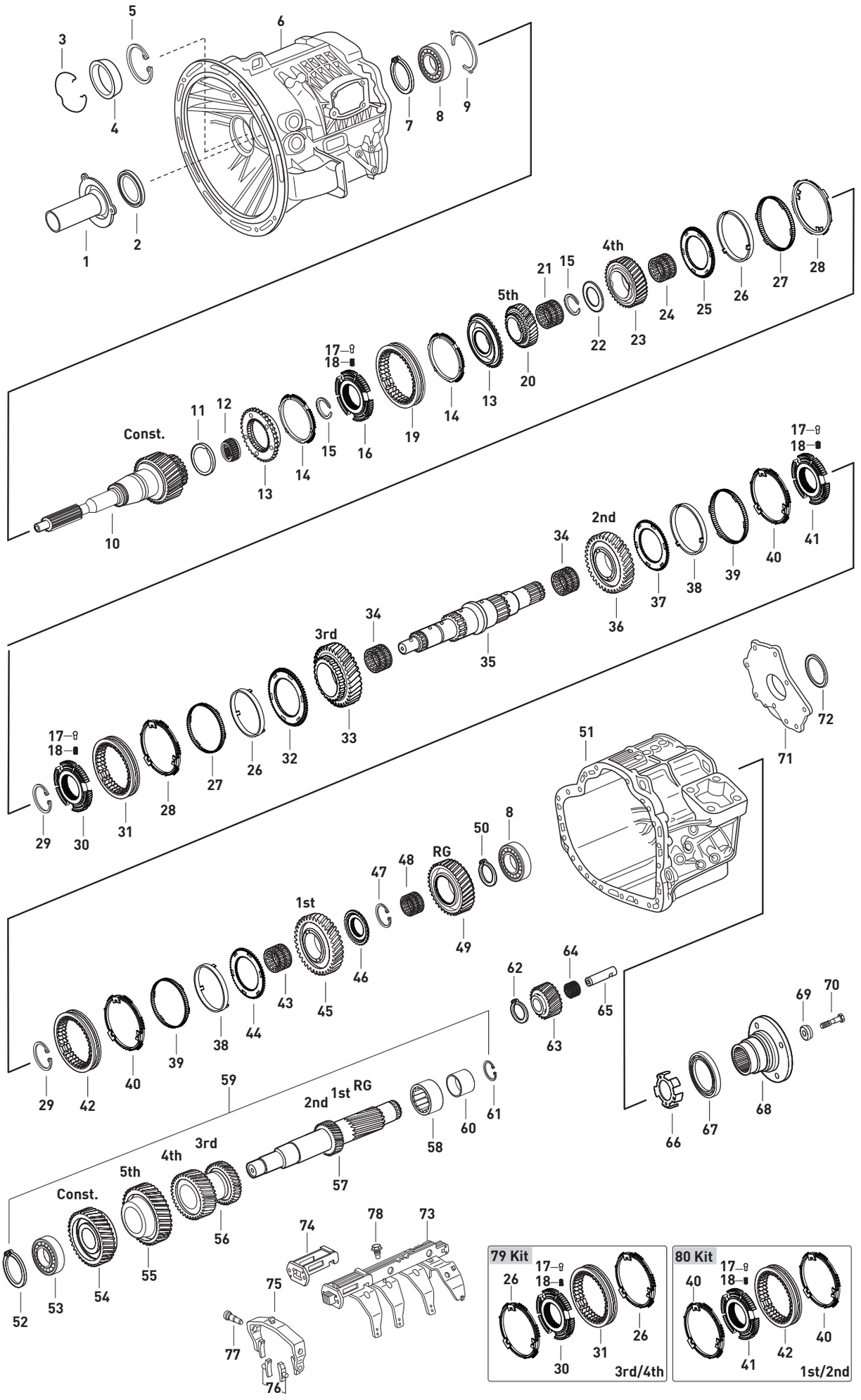


Original parts names, oem numbers, symbols and descriptions used in this catalogue are for reference purposes only.

| Fig. | Kacmaz No | Oem No | Oem Old No | Pcs. | Ürün Tanımı | Description | Sizes | Not | G71 - 6 | G90 - 6 |
|---|---|---|---|---|---|---|---|---|---|---|
| 41 | K21.06891 | 967 262 0035 | | 1 | 1./2.VİTES YILDIZ DİŞLİ | SYNCHRONIZER HUB | | | ♦ | ♦ |
| 42 | K21.06615 | 970 262 3323 | (970 262 3723) | 1 | 1./2.VİTES HALKA | ENGAGING SLEEVE | | | ♦ | ♦ |
| | | | (694 262 0023) | | | | | | | |
| | | | (975 262 0223) | | | | | | | |
| 43 | K21.06794 | 018 981 5310 | (017 981 6210) | 1 | 1.VİTES MASURA BİLYA | NEEDLE BEARING | 72X80X40mm | | ♦ | ♦ |
| | | | (017 981 5010) | | | | | | | |
| 44 | K21.06604 | 970 262 1734 | (694 262 0234) | 1 | 1.VİTES SENKROMENÇ | ENGAGING RING | | | ♦ | ♦ |
| | | | (975 262 0334) | | | | | | | |
| 45 | K21.06825 | 967 262 0111 | (967 262 0211) | 1 | 1.VİTES DİŞLİSİ 50 DİŞ | GEAR 1st 50 T. | | | ♦ | ♦ |
| 46 | K21.06822 | 970 262 2835 | | 1 | GERİ VİTES YILDIZ DİŞLİ | SYNCHRONIZER HUB | | | ♦ | ♦ |
| 47 | K21.06795 | 990 262 7100 | (970 262 0194) | 1 | GERİ VİTES YILDIZ DİŞLİ SEKMANI | RETAINING RING | 1,88mm | | ♦ | ♦ |
| 47 | K21.06796 | 990 262 7200 | (970 262 0294) | 1 | GERİ VİTES YILDIZ DİŞLİ SEKMANI | RETAINING RING | 1,92mm | | ♦ | ♦ |
| 47 | K21.06797 | 970 262 0394 | | 1 | GERİ VİTES YILDIZ DİŞLİ SEKMANI | RETAINING RING | 1,96mm | | ♦ | ♦ |
| 47 | K21.06798 | 970 262 0494 | | 1 | GERİ VİTES YILDIZ DİŞLİ SEKMANI | RETAINING RING | 2,00mm | | ♦ | ♦ |
| 47 | K21.06799 | 970 994 0040 | | 1 | GERİ VİTES YILDIZ DİŞLİ SEKMANI | RETAINING RING | 2,04mm | | ♦ | ♦ |
| 47 | K21.06800 | 970 994 0140 | | 1 | GERİ VİTES YILDIZ DİŞLİ SEKMANI | RETAINING RING | 2,08mm | | ♦ | ♦ |
| 48 | K21.06892 | 022 981 8810 | (023 981 4310) | 1 | GERİ VİTES MASURA BİLYA | NEEDLE BEARING | 63X71X47,8mm | | ♦ | ♦ |
| | | | (023 981 0910) | | | | | | | |
| 49 | K21.06824 | 967 262 0133 | (967 262 0233) | 1 | GERİ VİTES DİŞLİSİ | REVERSE GEAR | | | ♦ | ♦ |
| 50 | K21.06894 | 010 994 7741 | | 1 | KAMALI MİL ARKA BİLYA SEKMANI | RETAINING RING | 3,85mm | | ♦ | ♦ |
| 50 | K21.06895 | 010 994 7841 | | 1 | KAMALI MİL ARKA BİLYA SEKMANI | RETAINING RING | 3,90mm | | ♦ | ♦ |
| 50 | K21.06896 | 010 994 7941 | | 1 | KAMALI MİL ARKA BİLYA SEKMANI | RETAINING RING | 3,95mm | | ♦ | ♦ |
| 50 | K21.06897 | 010 994 8041 | | 1 | KAMALI MİL ARKA BİLYA SEKMANI | RETAINING RING | 4,00mm | | ♦ | ♦ |
| 50 | K21.06898 | 011 994 1941 | | 1 | KAMALI MİL ARKA BİLYA SEKMANI | RETAINING RING | 4,05mm | | ♦ | ♦ |
| 51 | | 967 261 0103 | | 1 | ŞANZIMAN ORTA GÖVDE | HOUSING | | | ♦ | ♦ |
| 52 | K21.06931 | 010 994 9441 | | 1 | GRUP MİLİ ÖN BİLYA SEKMANI | RETAINING RING | 2,10mm | | ♦ | ♦ |
| 52 | K21.06932 | 010 994 8741 | | 1 | GRUP MİLİ ÖN BİLYA SEKMANI | RETAINING RING | 2,20mm | | ♦ | ♦ |
| 52 | K21.06933 | 010 994 8941 | | 1 | GRUP MİLİ ÖN BİLYA SEKMANI | RETAINING RING | 2,30mm | | ♦ | ♦ |
| 52 | K21.06934 | 387 994 1441 | | 1 | GRUP MİLİ ÖN BİLYA SEKMANI | RETAINING RING | 2,40mm | | ♦ | ♦ |
| 52 | K21.06935 | 387 994 1241 | | 1 | GRUP MİLİ ÖN BİLYA SEKMANI | RETAINING RING | 2,50mm | | ♦ | ♦ |
| 52 | K21.06936 | 387 994 1041 | | 1 | GRUP MİLİ ÖN BİLYA SEKMANI | RETAINING RING | 2,60mm | | ♦ | ♦ |
| 52 | K21.06937 | 387 994 0841 | | 1 | GRUP MİLİ ÖN BİLYA SEKMANI | RETAINING RING | 2,70mm | | ♦ | ♦ |
| 52 | K21.06938 | 387 994 0641 | | 1 | GRUP MİLİ ÖN BİLYA SEKMANI | RETAINING RING | 2,80mm | | ♦ | ♦ |
| 52 | K21.06939 | 387 994 0441 | | 1 | GRUP MİLİ ÖN BİLYA SEKMANI | RETAINING RING | 2,90mm | | ♦ | ♦ |
| 52 | K21.06940 | | | 1 | GRUP MİLİ ÖN BİLYA SEKMANI | RETAINING RING | 3,00mm | | ♦ | ♦ |
| 53 | K21.06899 | 010 981 0325 | (009 981 7725) | 1 | GRUP MİLİ ÖN BİLYA | ROLLER BEARING | 50X110X27mm | | ♦ | ♦ |
| 54 | K21.06840 | 970 263 1310 | | 1 | PRİZDİREK KARŞILIĞI 53 DİŞ | CONSTANT GEAR 53 T. | | | ♦ | |
| 54 | K21.06904 | 976 263 2010 | | 1 | PRİZDİREK KARŞILIĞI 45 DİŞ | CONSTANT GEAR 45 T. | | | | ♦ |
| 55 | K21.06625 | 970 263 0515 | (970 263 0615) | 1 | 5.VİTES DİŞLİ KARŞILIĞI 45 DİŞ | GEAR 5th 45 T. | | | ♦ | |
| | | | (694 263 0015) | | | | | | | |
| 55 | K21.06903 | 976 263 0716 | | 1 | 5.VİTES DİŞLİ KARŞILIĞI 53 DİŞ | GEAR 5th 53 T. | | | | ♦ |
| 56 | K21.06841 | 970 263 1013 | | 1 | 3./4.VİTES DİŞLİ KARŞILIĞI 26/38 DİŞ | DOUBLE GEAR 3rd/4th 26/38 T | | | ♦ | ♦ |
| 57 | K21.06839 | 967 263 0102 | | 1 | GRUP MİLİ 12/19 DİŞ | COUNTER SHAFT 12/19 T. | | | ♦ | ♦ |
| 58 | K21.06723 | 002 981 7512 | (010 981 4901) | 1 | GRUP MİLİ ARKA BİLYA | ROLLER BEARING | 47,5X80,1X26,4mm | | ♦ | ♦ |
| | | | (010 981 8401) | | | | | | | |
| 59 | K21.06900 | 967 260 0024 | | Kit | GRUP MİLİ KOMPLE | COUNTER SHAFT COMP. | | | ♦ | |
| 59 | K21.06901 | 967 260 0124 | | Kit | GRUP MİLİ KOMPLE | COUNTER SHAFT COMP. | | | | ♦ |
| 60 | K21.06836 | 970 981 0081 | | 1 | GRUP ARKA BİLYA BURCU | BUSH | 47,5X37X26mm | | ♦ | ♦ |
| 61 | K21.06815 | 912009 037100 | | 1 | GRUP ARKA BİLYA SEKMANI | RETAINING RING | 1,50mm | | ♦ | ♦ |
| 62 | K21.06816 | 900055 032310 | | 1 | KÜÇÜK GERİ VİTES DİŞLİ SEKMANI | RETAINING RING | 32X1,5mm | | ♦ | ♦ |
| 63 | K21.06902 | 967 263 0031 | (967 263 0231) | 1 | KÜÇÜK GERİ VİTES DİŞLİSİ | REVERSE IDLER GEAR | | | ♦ | ♦ |
| 64 | K21.06812 | 018 981 5710 | (017 981 6110) | 1 | KÜÇÜK GERİ VİTES MASURA BİLYA | NEEDLE CAGE | 32X40X49,3mm | | ♦ | ♦ |
| | | | (017 981 6010) | | | | | | | |

NOTES :

NOTLAR :





Original parts names, oem numbers, symbols and descriptions used in this catalogue are for reference purposes only.

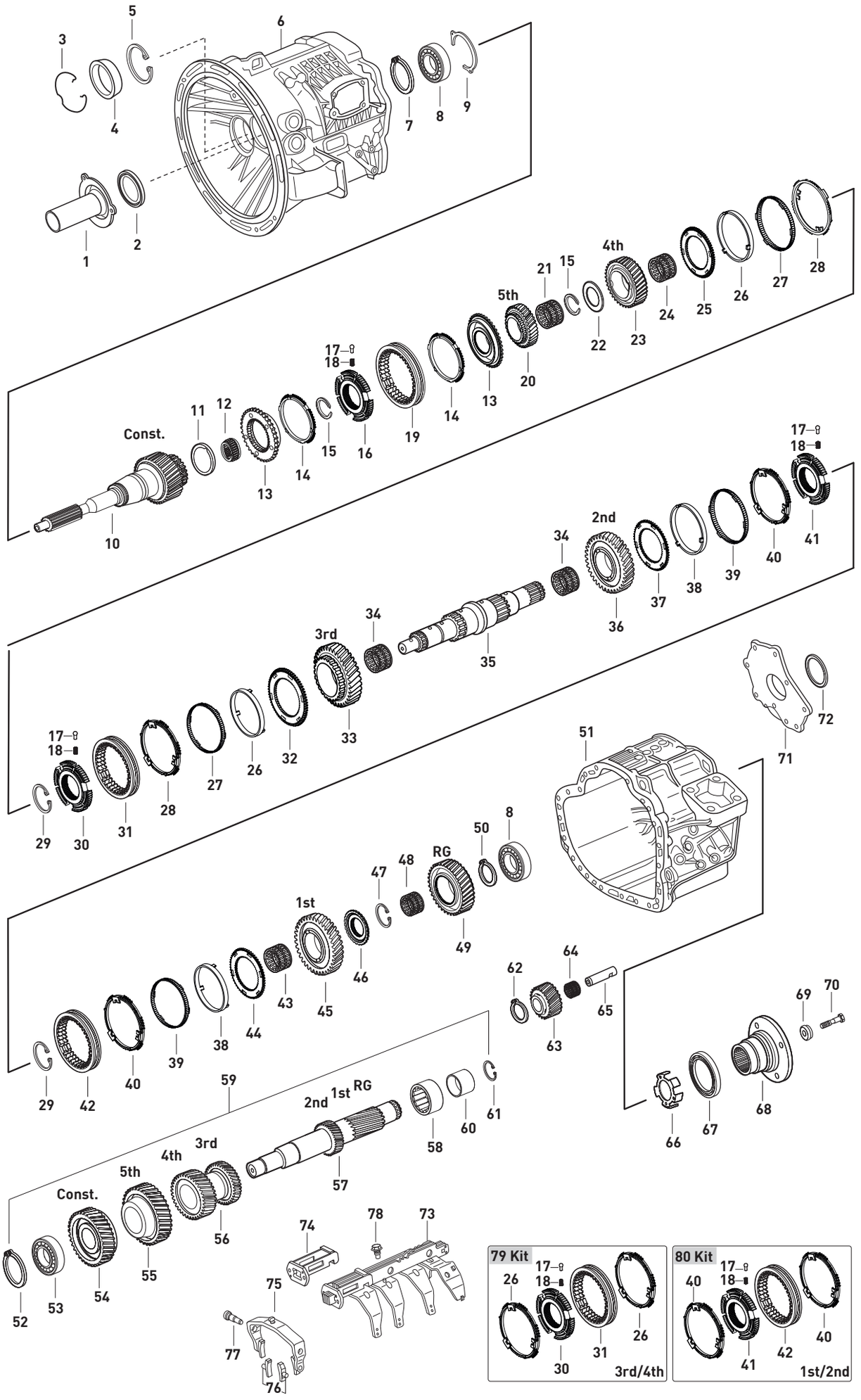


Original parts names, oem numbers, symbols and descriptions used in this catalogue are for reference purposes only.

| Fig. | Kacmaz No | Oem No | Oem Old No | Pcs. | Ürün Tanımı | Description | Sizes | Not | G71 - 6 | G90 - 6 |
|---|---|---|---|---|---|---|---|---|---|---|
| 65 | K21.06833 | 694 263 0030 | (970 263 0230) | 1 | KÜÇÜK GERİ VİTES PİMİ | PIN | | | ♦ | ♦ |
| 66 | K21.06854 | 970 262 0128 | | 1 | DEVİR SENSÖR SACI | PULSE STAR | | | ♦ | ♦ |
| 67 | K21.06813 | 024 997 3247 | (024 997 0447) | 1 | ŞANZIMAN ARKA KEÇE | OIL SEAL | 70X88X10mm | | ♦ | ♦ |
| 68 | K21.06814 | 970 262 1045 | (970 262 0745) | 1 | ŞANZIMAN FLANŞI | COMPANION FLANGE | | | ♦ | ♦ |
| 68 | | 970 262 0545 | | 1 | ŞANZIMAN FLANŞI | COMPANION FLANGE | | | ♦ | |
| 69 | K21.06817 | 383 282 0262 | (970 262 0362) | 1 | ŞANZIMAN FLANŞ ALIN PULU | THRUST WASHER | | | ♦ | ♦ |
| 70 | | 000000 006511 | | 1 | ŞANZIMAN FLANŞ ALIN VİDASI | SCREW | M16X1,5X60 | | ♦ | ♦ |
| 71 | | 970 261 0533 | | 1 | ARKA KAPAK | COVER | | | ♦ | ♦ |
| 72 | K21.06837 | 970 263 0350 | (694 263 0050) | 1 | GRUP MİLİ ARKA BİLYA PLASTİK BURCU | PLASTIC BUSHING | | | ♦ | ♦ |
| | | | (970 263 0050) | | | | | | | |
| 73 | | 967 260 1131 | | 1 | VİTES HİLAL TAKIMI | SHIFTING FORK COMPLETE | | | ♦ | |
| 73 | | 967 260 1231 | | 1 | VİTES HİLAL TAKIMI | SHIFTING FORK COMPLETE | | | | ♦ |
| 74 | | 970 260 0446 | | 1 | VİTES HİLAL PLEYTİ | PLATE | | | ♦ | ♦ |
| 75 | | 976 260 2530 | (972 265 1302) | 1 | 5-6.VİTES VİTES HİLALİ | SHIFTING FORK | | | | ♦ |
| | | | (976 265 0402) | | | | | | | |
| 76 | | 967 265 0149 | | 2 | HİLAL PABUCU | SLIDING PAD | | | | ♦ |
| 77 | K21.04308 | 960 265 0874 | (945 265 1374) | 1 | HİLAL CİVATASI | PIN | | | | ♦ |
| | | | (960 265 0674) | | | | | | | |
| 78 | K21.06946 | 000 260 0554 | (901 260 1854) | 4 | HİLAL PİM CİVATASI | PIN | | | ♦ | ♦ |
| | | | (970 260 1554) | | | | | | | |
| 79 | K21.06955 | 970 260 2944 | | Kit | 3./4.VİTES SENKROMENÇ KİT | SYNCH.KIT 3rd/4th | | | ♦ | ♦ |
| 80 | K21.06954 | 970 260 2844 | | Kit | 1./2.VİTES SENKROMENÇ KİT | SYNCH.KIT 1st/2nd | | | ♦ | ♦ |

NOTES :

NOTLAR :





Original parts names, oem numbers, symbols and descriptions used in this catalogue are for reference purposes only.

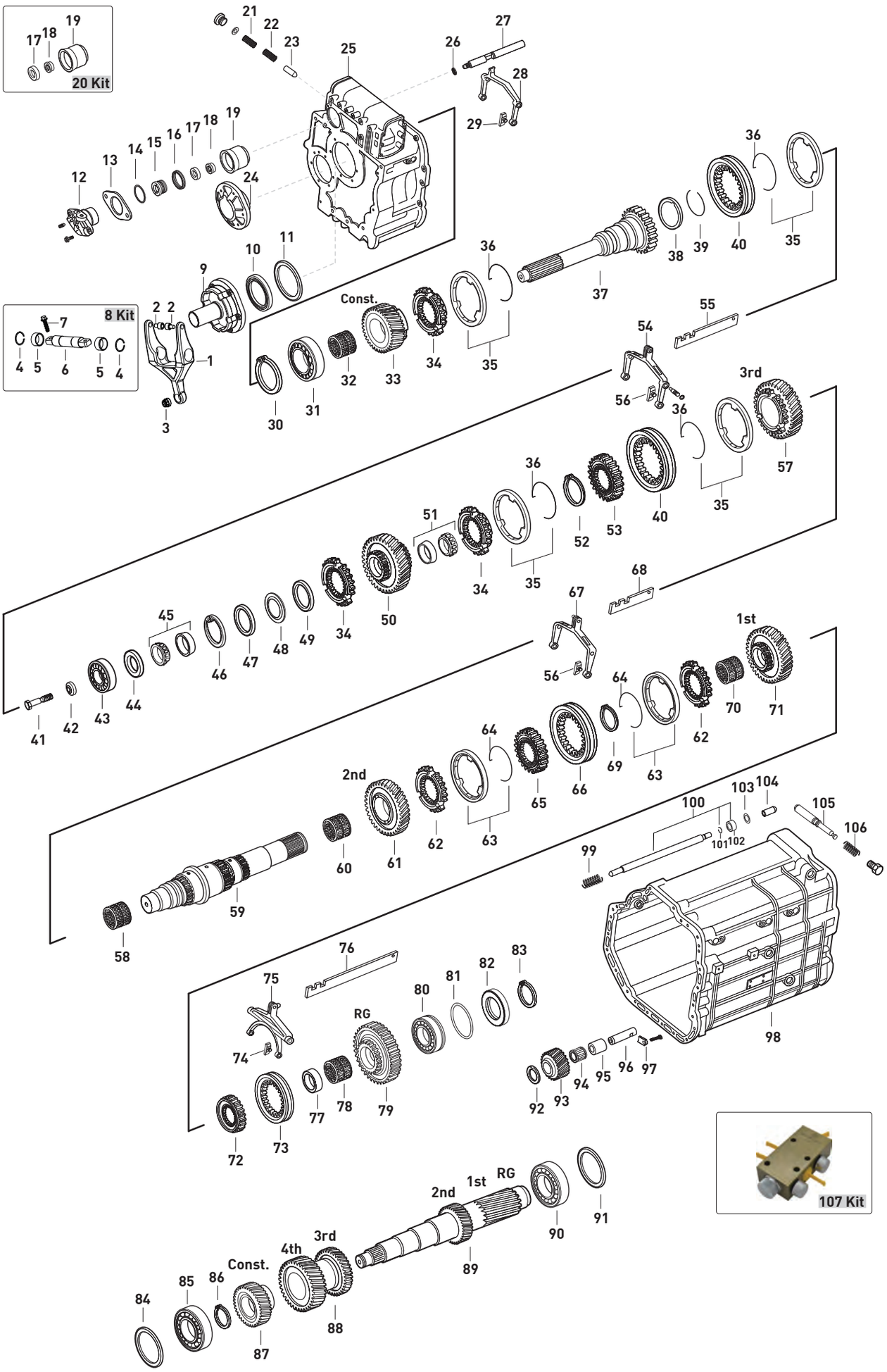




Original parts names, oem numbers, symbols and descriptions used in this catalogue are for reference purposes only.

| Fig. | Kacmaz No | Oem No | Oem Old No | Pcs. | Ürün Tanımı | Description | Sizes | Not | G125-16/14,0 | G135-16/11,9 |
|---|---|---|---|---|---|---|---|---|---|---|
| 1 | | 650 250 3813 | | 1 | DEBRİYAJ ÇATALI | RELEASE FORK | | | ♦ | ♦ |
| 2 | K21.07038 | 000 254 0017 | | 2 | DEBRİYAJ ÇATAL BURÇ VE PİMİ | CAM ROLLER | | | ♦ | ♦ |
| 3 | K21.07040 | 000 254 0335 | | 1 | DEBRİYAJ ÇATAL PLASTİK BURCU | PLASTIC BUSHING | | | ♦ | ♦ |
| 4 | | 912009 037200 | | 4 | DEBRİYAJ ÇATAL MİL SEKMANI | RETAINING RING | | | ♦ | ♦ |
| 5 | | 001 992 8401 | | 2 | DEBRİYAJ ÇATAL MİL BURCU | BUSHING | | | ♦ | ♦ |
| 6 | | 650 254 0006 | | 1 | DEBRİYAJ ÇATAL MİLİ | SHAFT | | | ♦ | ♦ |
| 7 | | 914112 010025 | | 2 | DEBRİYAJ ÇATAL MİL VİDASI | SCREW | M10X45 | | ♦ | ♦ |
| 8 | K21.04309 | | | Kit | DEBRİYAJ ÇATALI TAMİR TAKIMI | RELEASE FORK REPAIR KIT | | | ♦ | ♦ |
| 9 | K21.03403 | 389 261 3318 | (389 261 1018) | 1 | PRİZDİREK KEÇE KAPAĞI | COVER | | (1) | ♦ | ♦ |
| 9 | | 389 261 4418 | | 1 | PRİZDİREK KEÇE KAPAĞI | COVER | | (2) | ♦ | |
| 10 | K21.03521 | 015 997 1647 | (015 997 0647) | 1 | PRİZDİREK KEÇESİ | OIL SEAL | 52X68X8mm | (1) | ♦ | ♦ |
| | | | (024 997 2147) | | | | | | | |
| 10 | | 015 997 0347 | | 1 | PRİZDİREK KEÇESİ | OIL SEAL | 46X64X8mm | (2) | ♦ | |
| 11 | K21.04162 | 389 262 4152 | (389 262 0955) | 1 | PRİZDİREK AYAR RAYNELİ | THRUST WASHER | 0,10mm | | ♦ | ♦ |
| 11 | K21.04243 | 389 262 0855 | | 1 | PRİZDİREK AYAR RAYNELİ | THRUST WASHER | 0,15mm | | ♦ | ♦ |
| 11 | K21.04151 | 389 262 0755 | | 1 | PRİZDİREK AYAR RAYNELİ | THRUST WASHER | 0,20mm | | ♦ | ♦ |
| 11 | K21.06715 | 389 262 3055 | | 1 | PRİZDİREK AYAR RAYNELİ | THRUST WASHER | 0,25mm | | ♦ | ♦ |
| 11 | K21.04221 | 389 262 3255 | | 1 | PRİZDİREK AYAR RAYNELİ | THRUST WASHER | 0,31mm | | ♦ | ♦ |
| 11 | K21.04163 | 389 262 3555 | (389 262 0655) | 1 | PRİZDİREK AYAR RAYNELİ | THRUST WASHER | 0,40mm | | ♦ | ♦ |
| | | | (389 262 4452) | | | | | | | |
| 11 | K21.04164 | 389 262 3755 | (389 262 1954) | 1 | PRİZDİREK AYAR RAYNELİ | THRUST WASHER | 0,46mm | | ♦ | ♦ |
| 11 | K21.04246 | 389 262 3855 | | 1 | PRİZDİREK AYAR RAYNELİ | THRUST WASHER | 0,49mm | | ♦ | ♦ |
| 11 | K21.04250 | 389 262 4055 | (389 262 0155) | 1 | PRİZDİREK AYAR RAYNELİ | THRUST WASHER | 0,55mm | | ♦ | ♦ |
| | | | (389 262 2154) | | | | | | | |
| 11 | K21.04167 | 389 262 4255 | (389 262 2254) | 1 | PRİZDİREK AYAR RAYNELİ | THRUST WASHER | 0,61mm | | ♦ | ♦ |
| 11 | K21.04168 | 389 262 4355 | (389 262 2354) | 1 | PRİZDİREK AYAR RAYNELİ | THRUST WASHER | 0,64mm | | ♦ | ♦ |
| 11 | K21.04169 | 389 262 4555 | (389 262 2454) | 1 | PRİZDİREK AYAR RAYNELİ | THRUST WASHER | 0,70mm | | ♦ | ♦ |
| 11 | K21.04170 | 389 262 4755 | (389 262 2554) | 1 | PRİZDİREK AYAR RAYNELİ | THRUST WASHER | 0,76mm | | ♦ | ♦ |
| 11 | K21.04281 | 389 262 4855 | (389 262 0555) | 1 | PRİZDİREK AYAR RAYNELİ | THRUST WASHER | 0,79mm | | ♦ | ♦ |
| 11 | K21.04282 | 389 262 5555 | | 1 | PRİZDİREK AYAR RAYNELİ | THRUST WASHER | 1,00mm | | ♦ | ♦ |
| 11 | K21.04171 | 389 262 9654 | (389 262 2654) | 1 | PRİZDİREK AYAR RAYNELİ | THRUST WASHER | 2,00mm | | ♦ | ♦ |
| 12 | K21.06236 | 389 267 2819 | (389 267 2719) | 1 | TAKVİYE SİLİNDİR GÖVDE KAPAĞI | COVER | | | ♦ | ♦ |
| | | | (389 267 2419) | | | | | | | |
| | | | (389 267 2319) | | | | | | | |
| | | | (389 267 1519) | | | | | | | |
| 13 | K21.04158 | 387 263 3352 | | 1 | TAKVİYE SİLİNDİR PULU | SPACER WASHER | 0,20mm | | ♦ | ♦ |
| 13 | K21.04159 | 387 263 3452 | | 1 | TAKVİYE SİLİNDİR PULU | SPACER WASHER | 0,40mm | | ♦ | ♦ |
| 13 | K21.04179 | 387 263 3552 | | 1 | TAKVİYE SİLİNDİR PULU | SPACER WASHER | 0,60mm | | ♦ | ♦ |
| 13 | K21.04181 | 387 263 3652 | | 1 | TAKVİYE SİLİNDİR PULU | SPACER WASHER | 0,80mm | | ♦ | ♦ |
| 13 | K21.04180 | 387 263 3752 | | 1 | TAKVİYE SİLİNDİR PULU | SPACER WASHER | 1,00mm | | ♦ | ♦ |
| 13 | K21.04251 | 387 263 3852 | | 1 | TAKVİYE SİLİNDİR PULU | SPACER WASHER | 2,00mm | | ♦ | ♦ |
| 14 | K21.06398 | 007 997 4248 | | 1 | TAKVİYE SİLİNDİR ORİNGİ | O-RING | 63X3mm | | ♦ | ♦ |
| 15 | K21.06994 | 945 267 0218 | (387 267 0918) | 1 | TAKVİYE MİL PİSTONU | PISTON | | | ♦ | ♦ |
| | | | (387 267 0618) | | | | | | | |
| 16 | K21.03524 | 006 997 6447 | (020 997 6647) | 1 | TAKVİYE HAVA KEÇESİ | OIL SEAL | 41X48X11,5mm | | ♦ | ♦ |
| | | | (012 997 3347) | | | | | | | |
| 17 | K21.04178 | 387 267 0650 | (387 267 0250) | 1 | TAKVİYE HİLAL MİL BURCU | BUSHING | 34X22X8mm | | ♦ | ♦ |
| 18 | K21.03523 | 000 267 0197 | (000 267 0397) | 1 | TAKVİYE HİLAL MİL KEÇESİ | OIL SEAL | 22X32X8mm | | ♦ | ♦ |
| 19 | K21.06013 | 389 267 3319 | (389 267 0419) | 1 | TAKVİYE SİLİNDİR GÖVDESİ (BOŞ) | CYLINDER (EMPTY) | | | ♦ | ♦ |
| | | | (389 267 2119) | | | | | | | |
| | | | (389 267 2219) | | | | | | | |
| 20 | K21.06500 | | | Kit | TAKVİYE SİLİNDİR GÖVDESİ (DOLU) | CYLINDER (FULL) | | | ♦ | ♦ |
| 21 | K21.06015 | 387 993 4501 | | 1 | ŞANZ.TAKVİYE KİLİT FİŞEK YAYI | SPRING | 6,2X63mm | | ♦ | ♦ |

NOTES :
Parts encoded alphabetic and numaric are used together.

NOTLAR :
Alfabetik ve rakam ile kodlanan parçalar birlikte kullanılır.





Original parts names, oem numbers, symbols and descriptions used in this catalogue are for reference purposes only.

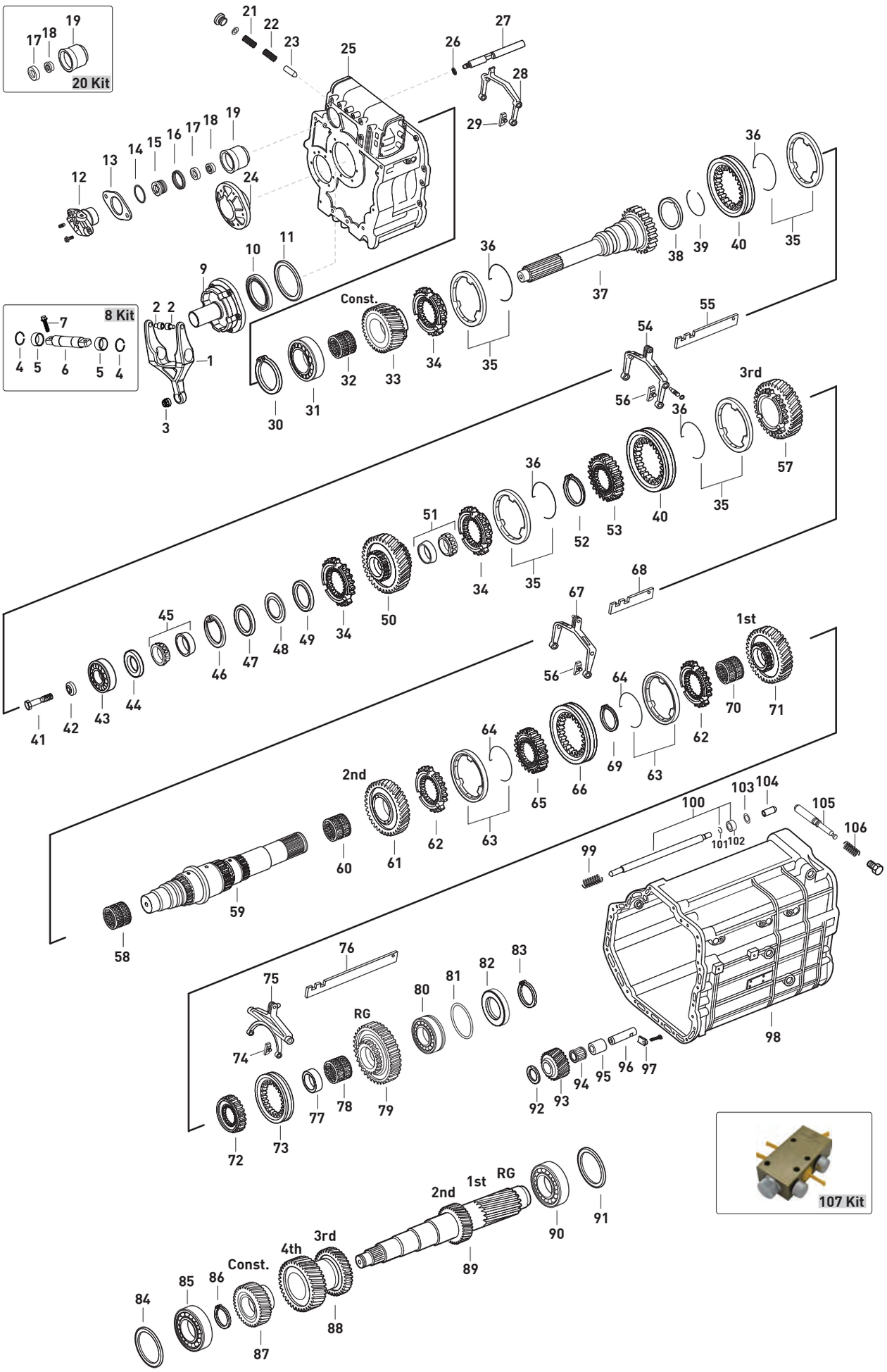




Original parts names, oem numbers, symbols and descriptions used in this catalogue are for reference purposes only.

| Fig. | Kacmaz No | Oem No | Oem Old No | Pcs. | Ürün Tanımı | Description | Sizes | Not | G125-16/14,0 | G135-16/11,9 |
|---|---|---|---|---|---|---|---|---|---|---|
| 22 | K21.03500 | 387 993 4401 | (387 993 2501) | 1 | KİLİT YAYI | SPRING | 9,8X63,3mm | | ♦ | ♦ |
| 23 | K21.03492 | 389 267 1174 | (387 267 0074) | 1 | KİLİT FİŞEĞİ | PIN | | | ♦ | ♦ |
| 24 | | 389 261 1933 | (389 261 0633) | 1 | GRUP MİLİ ÖN BİLYA KAPAĞI | COVER | | | ♦ | ♦ |
| | | | (389 262 0133) | | | | | | | |
| 25 | | 389 261 0108 | | 1 | ŞANZIMAN ÖN GÖVDE | HOUSING | | | ♦ | ♦ |
| 26 | K21.04160 | 387 263 2652 | | 1 | TAKVİYE HİLAL MİL PULU | SPACER WASHER | 0,20mm | | ♦ | ♦ |
| 26 | K21.04161 | 387 263 2752 | | 1 | TAKVİYE HİLAL MİL PULU | SPACER WASHER | 0,40mm | | ♦ | ♦ |
| 26 | | 387 263 2852 | | 1 | TAKVİYE HİLAL MİL PULU | SPACER WASHER | 0,60mm | | ♦ | ♦ |
| 26 | | 387 263 3052 | | 1 | TAKVİYE HİLAL MİL PULU | SPACER WASHER | 1,00mm | | ♦ | ♦ |
| 27 | | 389 267 2217 | | 1 | TAKVİYE HİLAL MİLİ | G SHIFT RAIL | | | ♦ | ♦ |
| 27 | | 389 267 2017 | | 1 | TAKVİYE HİLAL MİLİ | G SHIFT RAIL | | | ♦ | |
| 27 | | 389 267 3017 | | 1 | TAKVİYE HİLAL MİLİ | G SHIFT RAIL | | | | ♦ |
| 28 | K21.06406 | 389 265 0601 | | 1 | TAKVİYE HİLALİ | GEAR SHIFT FORK | | | ♦ | ♦ |
| 29 | K21.03406 | 389 265 2449 | (945 265 0349) | 2 | TAKVİYE HİLAL PABUCU | SLIDING PAD | | | ♦ | ♦ |
| | | | (387 265 0049) | | | | | | | |
| | | | (389 265 0949) | | | | | | | |
| | | | (389 265 1249) | | | | | | | |
| 30 | K21.04336 | 387 262 0473 | | 1 | PRİZDİREK ÖN BİLYA SEKMANI | RETAINING RING | 2,40mm | | ♦ | ♦ |
| 30 | K21.07018 | 387 262 0573 | | 1 | PRİZDİREK ÖN BİLYA SEKMANI | RETAINING RING | 2,45mm | | ♦ | ♦ |
| 30 | K21.04352 | 387 262 0673 | | 1 | PRİZDİREK ÖN BİLYA SEKMANI | RETAINING RING | 2,50mm | | ♦ | ♦ |
| 30 | K21.07019 | 387 262 0773 | | 1 | PRİZDİREK ÖN BİLYA SEKMANI | RETAINING RING | 2,55mm | | ♦ | ♦ |
| 30 | K21.04337 | 387 262 0873 | | 1 | PRİZDİREK ÖN BİLYA SEKMANI | RETAINING RING | 2,60mm | | ♦ | ♦ |
| 30 | K21.06929 | 387 262 0973 | | 1 | PRİZDİREK ÖN BİLYA SEKMANI | RETAINING RING | 2,65mm | | ♦ | ♦ |
| 30 | K21.06669 | 387 262 7673 | | 1 | PRİZDİREK ÖN BİLYA SEKMANI | RETAINING RING | 2,70mm | | ♦ | ♦ |
| 30 | K21.07020 | 387 262 7773 | | 1 | PRİZDİREK ÖN BİLYA SEKMANI | RETAINING RING | 2,75mm | | ♦ | ♦ |
| 30 | K21.06930 | 387 262 7873 | | 1 | PRİZDİREK ÖN BİLYA SEKMANI | RETAINING RING | 2,80mm | | ♦ | ♦ |
| 31 | | 009 981 6205 | (009 981 0605) | 1 | PRİZDİREK ÖN BİLYA | ROLLER BEARING | 72X140X28,3mm | | ♦ | ♦ |
| | | | (009 981 1005) | | | | | | | |
| 32 | K21.03807 | 013 981 6410 | (013 981 6210) | 1 | TAKVİYE MASURA BİLYA | NEEDLE CAGE | 82X90X35mm | (A) | ♦ | ♦ |
| | | | (014 981 4110) | | | | | | | |
| 32 | K21.03808 | 016 981 6710 | (016 981 0210) | 1 | TAKVİYE MASURA BİLYA | NEEDLE CAGE | 82X90X30mm | (B) | ♦ | ♦ |
| 33 | | 389 262 1210 | | 1 | TAKVİYE DİŞLİSİ 22 DİŞ | CONSTANT GEAR 22 T. | | | ♦ | |
| 33 | | 389 262 1410 | | 1 | TAKVİYE DİŞLİSİ 26 DİŞ | CONSTANT GEAR 26 T. | | | | ♦ |
| 34 | K21.03012 | 389 262 5634 | (389 262 3934) | 3 | TAK./4.VİTES SENKROMENÇ | ENGAGING RING | | | ♦ | ♦ |
| | | | (389 262 2434) | | | | | | | |
| | | | (387 262 0834) | | | | | | | |
| 35 | K21.03015 | 389 262 0637 | (387 262 0837) | 4 | TAK./3-4.VİTES FRENLEME (Mo) | SYNCHRONIZING CONE / Mo | | | ♦ | ♦ |
| | | | (389 262 1037) | | | | | | | |
| 35 | K21.06286 | 389 262 3137 | | 4 | TAK./3-4.VİTES FRENLEME (Mo) | SYNCHRONIZING CONE / Mo | | vertical striped | ♦ | ♦ |
| 36 | K21.03044 | 387 262 1093 | (387 262 0693) | 4 | FRENLEME TELİ | SPRING | | | ♦ | ♦ |
| | | | (960 262 1393) | | | | | | | |
| 37 | | 389 262 1501 | | 1 | PRİZDİREK 60 DİŞ | INPUT SHAFT 60 T. | | (A) | ♦ | |
| 37 | | 389 262 2001 | | 1 | PRİZDİREK 60 DİŞ | INPUT SHAFT 60 T. | | (A) | ♦ | ♦ |
| 37 | | 389 262 3901 | | 1 | PRİZDİREK 60 DİŞ | INPUT SHAFT 60 T. | | (B) | ♦ | |
| 37 | | 389 262 4201 | | 1 | PRİZDİREK 60 DİŞ | INPUT SHAFT 60 T. | | (B) | ♦ | ♦ |
| 38 | | 018 997 8447 | | 1 | PRİZDİREK ARKA KEÇE | OIL SEAL | | (B) | ♦ | ♦ |
| 39 | K21.04146 | 389 262 0973 | (945 262 0073) | 1 | PRİZDİREK KEÇE SEKMANI | LOCK RING | | (B) | ♦ | ♦ |
| 40 | K21.03011 | 389 262 3023 | (389 262 2223) | 2 | TAKVİYE/4.VİTES HALKA | ENGAGING SLEEVE | | | ♦ | ♦ |
| | | | (389 262 0623) | | | | | | | |
| 41 | | 389 990 0819 | | 1 | KAMALI MİL UÇ VİDA (Sağ Diş) | SCREW (Bolts -R- teeth) | | (A) | ♦ | ♦ |
| 41 | K21.03407 | 389 990 1819 | | 1 | KAMALI MİL UÇ VİDA (Sol Diş) | SCREW (Bolts -L- teeth) | | (B) | ♦ | ♦ |
| 42 | K21.04145 | 389 262 0862 | | 1 | KAMALI MİL UÇ VİDA PULU | WASHER | | | ♦ | ♦ |
| 43 | | 009 981 6805 | (017 981 3205) | 1 | KAMALI MİL UÇ BİLYA | ROLLER BEARING | 32X72X29,5mm | | ♦ | ♦ |

NOTES :
Parts encoded alphabetic and numaric are used together.

NOTLAR :
Alfabetik ve rakam ile kodlanan parçalar birlikte kullanılır.





Original parts names, oem numbers, symbols and descriptions used in this catalogue are for reference purposes only.

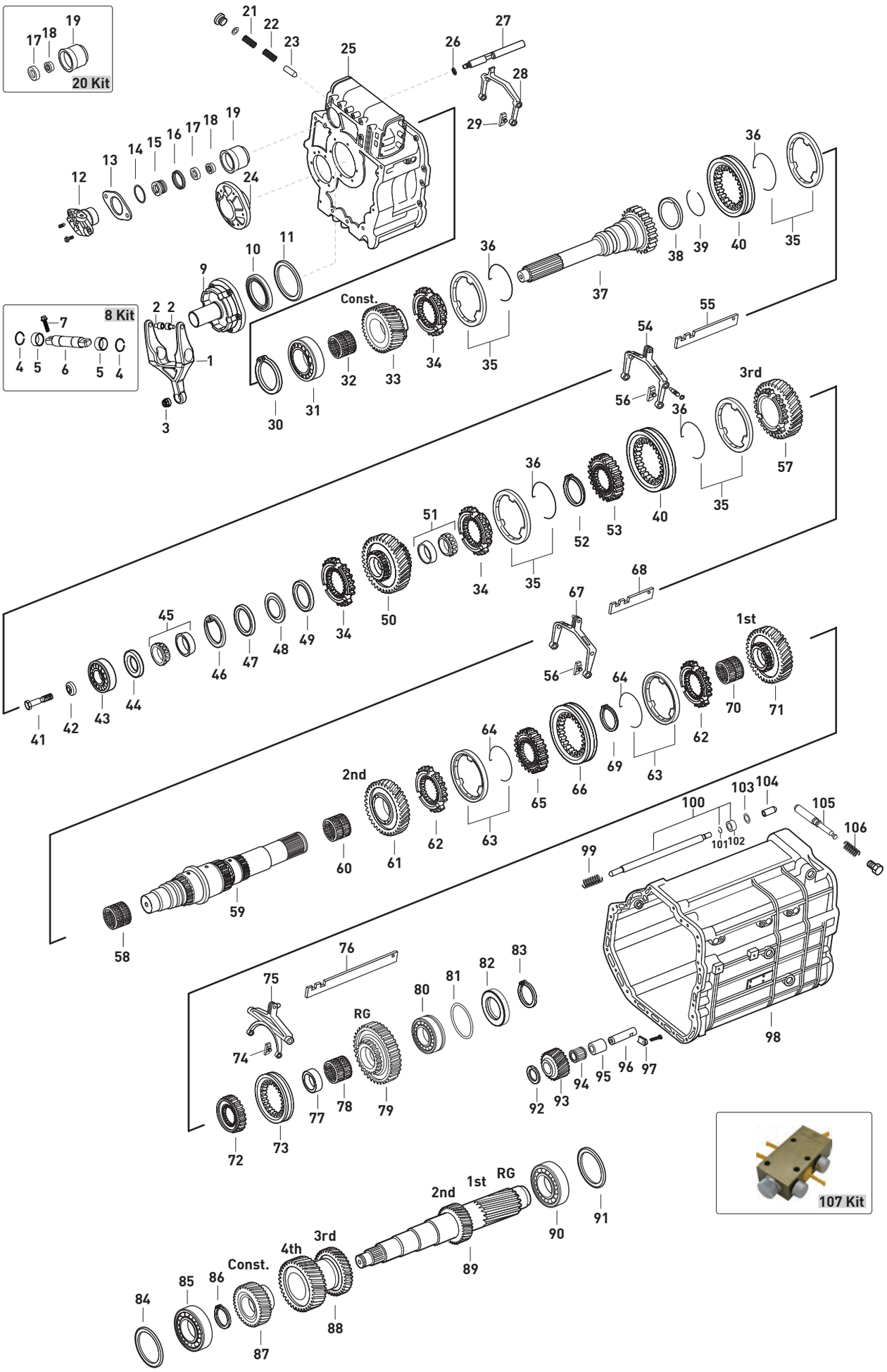




Original parts names, oem numbers, symbols and descriptions used in this catalogue are for reference purposes only.

| Fig. | Kacmaz No | Oem No | Oem Old No | Pcs. | Ürün Tanımı | Description | Sizes | Not | G125-16/14,0 | G135-16/11,9 |
|---|---|---|---|---|---|---|---|---|---|---|
| 44 | K21.04031 | 389 262 7252 | | 1 | KAMALI MİL UÇ BİLYA PULU | THRUST WASHER | 0,10mm | | ♦ | ♦ |
| 44 | | 389 262 7152 | | 1 | KAMALI MİL UÇ BİLYA PULU | THRUST WASHER | 0,15mm | | ♦ | ♦ |
| 44 | | 389 262 7052 | | 1 | KAMALI MİL UÇ BİLYA PULU | THRUST WASHER | 0,20mm | | ♦ | ♦ |
| 44 | K21.04034 | 389 262 6952 | | 1 | KAMALI MİL UÇ BİLYA PULU | THRUST WASHER | 0,40mm | | ♦ | ♦ |
| 44 | | 389 262 6852 | | 1 | KAMALI MİL UÇ BİLYA PULU | THRUST WASHER | 0,80mm | | ♦ | ♦ |
| 44 | | 389 262 0154 | | 1 | KAMALI MİL UÇ BİLYA PULU | THRUST WASHER | 2,30mm | | ♦ | ♦ |
| 44 | | 389 262 0354 | | 1 | KAMALI MİL UÇ BİLYA PULU | THRUST WASHER | 2,40mm | | ♦ | ♦ |
| 44 | | 389 262 0554 | | 1 | KAMALI MİL UÇ BİLYA PULU | THRUST WASHER | 2,50mm | | ♦ | ♦ |
| 44 | | 389 262 0754 | | 1 | KAMALI MİL UÇ BİLYA PULU | THRUST WASHER | 2,60mm | | ♦ | ♦ |
| 44 | | 389 262 0954 | | 1 | KAMALI MİL UÇ BİLYA PULU | THRUST WASHER | 2,70mm | | ♦ | ♦ |
| 44 | | 389 262 1154 | | 1 | KAMALI MİL UÇ BİLYA PULU | THRUST WASHER | 2,80mm | | ♦ | ♦ |
| 44 | | 389 262 1354 | | 1 | KAMALI MİL UÇ BİLYA PULU | THRUST WASHER | 2,90mm | | ♦ | ♦ |
| 44 | | 389 262 1554 | | 1 | KAMALI MİL UÇ BİLYA PULU | THRUST WASHER | 3,00mm | | ♦ | ♦ |
| 44 | | 389 262 1754 | | 1 | KAMALI MİL UÇ BİLYA PULU | THRUST WASHER | 3,10mm | | ♦ | ♦ |
| 44 | | 389 262 6554 | | 1 | KAMALI MİL UÇ BİLYA PULU | THRUST WASHER | 6,00mm | | ♦ | ♦ |
| 45 | | 010 981 2405 | (010 981 5805) | 1 | 4.VİTES DİŞLİSİ ÖN BİLYA | ROLLER BEARING | 45X90X26mm | | ♦ | ♦ |
| 46 | K21.04339 | 387 268 0773 | | 1 | 4.VİTES DİŞLİ SEKMANI | RETAINING RING | 3,05mm | | ♦ | ♦ |
| 46 | | 387 268 0873 | | 1 | 4.VİTES DİŞLİ SEKMANI | RETAINING RING | 3,08mm | | ♦ | ♦ |
| 46 | | 387 268 0973 | | 1 | 4.VİTES DİŞLİ SEKMANI | RETAINING RING | 3,11mm | | ♦ | ♦ |
| 46 | | 387 268 1073 | | 1 | 4.VİTES DİŞLİ SEKMANI | RETAINING RING | 3,14mm | | ♦ | ♦ |
| 47 | | 389 262 0551 | | 2 | 4.VİTES DİŞLİ AYAR PULU | THRUST WASHER | 3,20mm | | ♦ | ♦ |
| 47 | | 000988 070001 | | 1 | 4.VİTES DİŞLİ AYAR PULU | THRUST WASHER | | | ♦ | ♦ |
| 48 | K21.04070 | 389 262 1854 | | 1 | 4.VİTES DİŞLİ BİLYA ARA SACI | SPACER WASHER | | | ♦ | ♦ |
| 49 | K21.04056 | 389 262 1251 | | 1 | 4.VİTES BİLYA ARA AYAR PULU | THRUST WASHER | 2,20mm | | ♦ | ♦ |
| 49 | K21.04055 | 389 262 2151 | | 1 | 4.VİTES BİLYA ARA AYAR PULU | THRUST WASHER | 2,15mm | | ♦ | ♦ |
| 49 | K21.04054 | 389 262 1151 | | 1 | 4.VİTES BİLYA ARA AYAR PULU | THRUST WASHER | 2,10mm | | ♦ | ♦ |
| 49 | K21.04053 | 389 262 2051 | | 1 | 4.VİTES BİLYA ARA AYAR PULU | THRUST WASHER | 2,05mm | | ♦ | ♦ |
| 49 | K21.04052 | 389 262 1051 | | 1 | 4.VİTES BİLYA ARA AYAR PULU | THRUST WASHER | 2,00mm | | ♦ | ♦ |
| 49 | K21.04051 | 389 262 1951 | | 1 | 4.VİTES BİLYA ARA AYAR PULU | THRUST WASHER | 1,95mm | | ♦ | ♦ |
| 49 | K21.04050 | 389 262 0951 | | 1 | 4.VİTES BİLYA ARA AYAR PULU | THRUST WASHER | 1,90mm | | ♦ | ♦ |
| 49 | K21.04049 | 389 262 1851 | | 1 | 4.VİTES BİLYA ARA AYAR PULU | THRUST WASHER | 1,85mm | | ♦ | ♦ |
| 49 | K21.04048 | 389 262 0851 | | 1 | 4.VİTES BİLYA ARA AYAR PULU | THRUST WASHER | 1,80mm | | ♦ | ♦ |
| 49 | K21.04125 | 389 262 1751 | | 1 | 4.VİTES BİLYA ARA AYAR PULU | THRUST WASHER | 1,75mm | | ♦ | ♦ |
| 49 | K21.04157 | | | 1 | 4.VİTES BİLYA ARA AYAR PULU | THRUST WASHER | 1,60mm | | ♦ | ♦ |
| 49 | K21.04057 | 389 262 2751 | | 1 | 4.VİTES BİLYA ARA AYAR PULU | THRUST WASHER | 5,40mm | | ♦ | ♦ |
| 49 | K21.04058 | 389 262 2951 | | 1 | 4.VİTES BİLYA ARA AYAR PULU | THRUST WASHER | 5,50mm | | ♦ | ♦ |
| 49 | K21.04059 | 389 262 3151 | | 1 | 4.VİTES BİLYA ARA AYAR PULU | THRUST WASHER | 5,60mm | | ♦ | ♦ |
| 49 | K21.04060 | 389 262 3351 | | 1 | 4.VİTES BİLYA ARA AYAR PULU | THRUST WASHER | 5,70mm | | ♦ | ♦ |
| 49 | K21.04061 | 389 262 3551 | | 1 | 4.VİTES BİLYA ARA AYAR PULU | THRUST WASHER | 5,80mm | | ♦ | ♦ |
| 49 | K21.04062 | 389 262 3751 | | 1 | 4.VİTES BİLYA ARA AYAR PULU | THRUST WASHER | 5,90mm | | ♦ | ♦ |
| 49 | K21.04063 | 389 262 3951 | | 1 | 4.VİTES BİLYA ARA AYAR PULU | THRUST WASHER | 6,00mm | | ♦ | ♦ |
| 49 | K21.04064 | 389 262 4151 | | 1 | 4.VİTES BİLYA ARA AYAR PULU | THRUST WASHER | 6,10mm | | ♦ | ♦ |
| 49 | K21.04065 | 389 262 4351 | | 1 | 4.VİTES BİLYA ARA AYAR PULU | THRUST WASHER | 6,20mm | | ♦ | ♦ |
| 49 | K21.04066 | 389 262 4551 | | 1 | 4.VİTES BİLYA ARA AYAR PULU | THRUST WASHER | 6,30mm | | ♦ | ♦ |
| 49 | K21.04067 | 389 262 4751 | | 1 | 4.VİTES BİLYA ARA AYAR PULU | THRUST WASHER | 6,40mm | | ♦ | ♦ |
| 49 | K21.04068 | 389 262 4951 | | 1 | 4.VİTES BİLYA ARA AYAR PULU | THRUST WASHER | 6,50mm | | ♦ | ♦ |
| 49 | K21.04069 | 389 262 5151 | | 1 | 4.VİTES BİLYA ARA AYAR PULU | THRUST WASHER | 6,60mm | | ♦ | ♦ |
| 50 | K21.03398 | 389 262 5410 | (389 262 1510) | 1 | 4.VİTES DİŞLİSİ 24 DİŞ | GEAR 4th 24 T. | | | ♦ | ♦ |
| 51 | K21.03662 | 011 981 7705 | (014 981 8505) | 1 | 4.VİTES DİŞLİSİ ARKA BİLYA | ROLLER BEARING | 55X90X23mm | | ♦ | ♦ |
| | | | (012 981 1505) | | | | | | | |
| 52 | K21.04336 | 387 262 0473 | | 1 | 3./4.VİTES YILDIZ DİŞLİ SEKMANI | RETAINING RING | 2,40mm | | ♦ | ♦ |
| 52 | K21.07018 | 387 262 0573 | | 1 | 3./4.VİTES YILDIZ DİŞLİ SEKMANI | RETAINING RING | 2,45mm | | ♦ | ♦ |
| 52 | K21.04352 | 387 262 0673 | | 1 | 3./4.VİTES YILDIZ DİŞLİ SEKMANI | RETAINING RING | 2,50mm | | ♦ | ♦ |

NOTES :
Parts encoded alphabetic and numaric are used together.

NOTLAR :
Alfabetik ve rakam ile kodlanan parçalar birlikte kullanılır.





Original parts names, oem numbers, symbols and descriptions used in this catalogue are for reference purposes only.

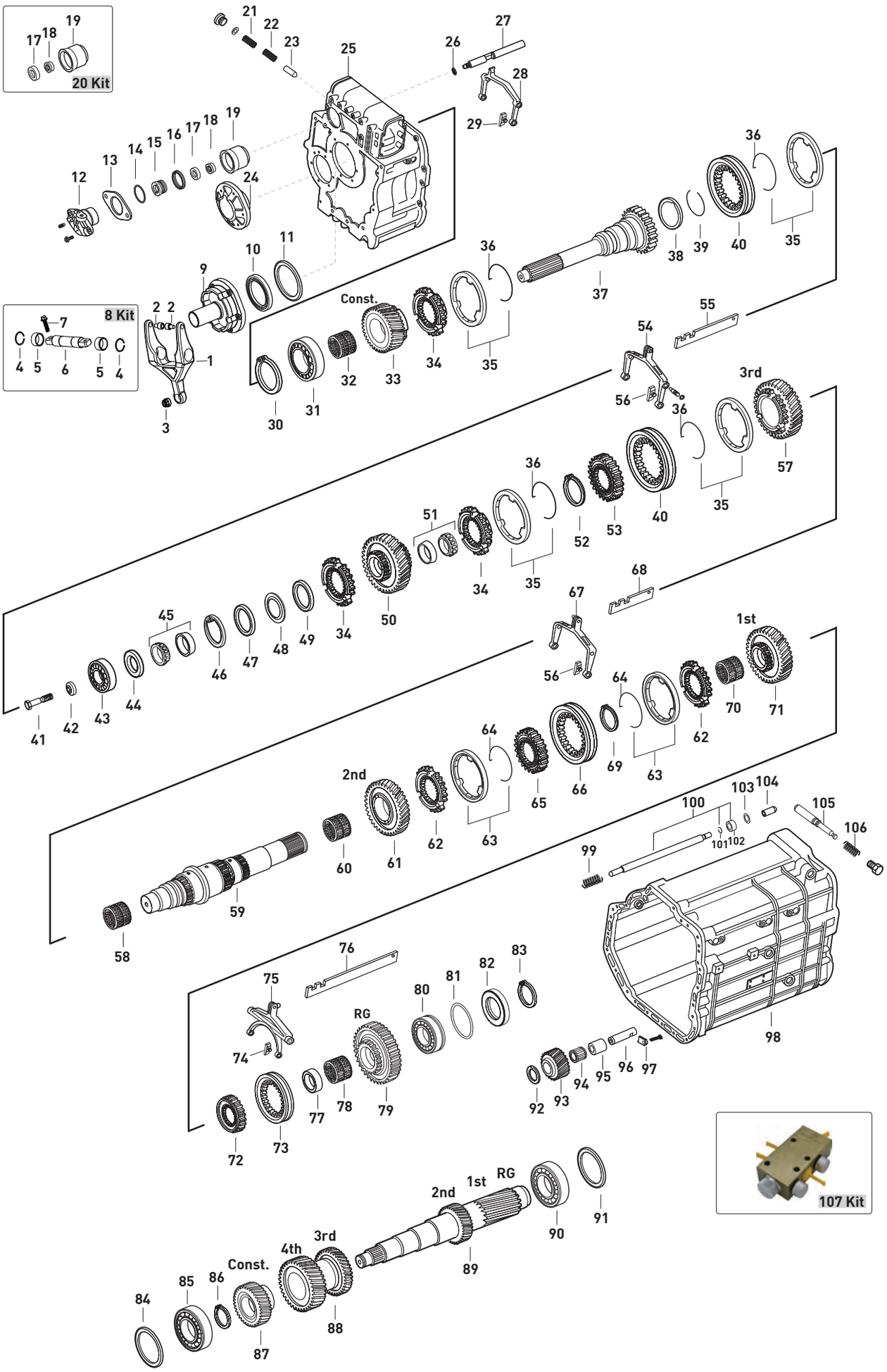




Original parts names, oem numbers, symbols and descriptions used in this catalogue are for reference purposes only.

| Fig. | Kacmaz No | Oem No | Oem Old No | Pcs. | Ürün Tanımı | Description | Sizes | Not | G125-16/14,0 | G135-16/11,9 |
|---|---|---|---|---|---|---|---|---|---|---|
| 52 | K21.07019 | 387 262 0773 | | 1 | 3./4.VİTES YILDIZ DİŞLİ SEKMANI | RETAINING RING | 2,55mm | | ♦ | ♦ |
| 52 | K21.04337 | 387 262 0873 | | 1 | 3./4.VİTES YILDIZ DİŞLİ SEKMANI | RETAINING RING | 2,60mm | | ♦ | ♦ |
| 52 | K21.06929 | 387 262 0973 | | 1 | 3./4.VİTES YILDIZ DİŞLİ SEKMANI | RETAINING RING | 2,65mm | | ♦ | ♦ |
| 52 | K21.06669 | 387 262 7673 | | 1 | 3./4.VİTES YILDIZ DİŞLİ SEKMANI | RETAINING RING | 2,70mm | | ♦ | ♦ |
| 52 | K21.07020 | 387 262 7773 | | 1 | 3./4.VİTES YILDIZ DİŞLİ SEKMANI | RETAINING RING | 2,75mm | | ♦ | ♦ |
| 52 | K21.06930 | 387 262 7873 | | 1 | 3./4.VİTES YILDIZ DİŞLİ SEKMANI | RETAINING RING | 2,80mm | | ♦ | ♦ |
| 53 | K21.03399 | 389 262 0635 | | 1 | 3./4.VİTES YILDIZ DİŞLİ | SYNCHRONIZER HUB | | | ♦ | ♦ |
| 54 | | 389 260 3730 | (389 260 2730) | 1 | 3./4.VİTES HİLALİ | SHIFTING FORK | | | ♦ | ♦ |
| | | | (389 260 0230) | | | | | | | |
| 55 | | 389 265 6104 | | 1 | 3./4.VİTES HİLAL ÇITASI | SHIFTING ROD | | | ♦ | ♦ |
| 56 | K21.03408 | 389 265 2349 | (389 265 1149) | 4 | 1./ 2-3./4. VİTES HİLAL PABUCU | SLIDING PAD | | | ♦ | ♦ |
| | | | (389 265 0849) | | | | | | | |
| | | | (945 265 0249) | | | | | | | |
| 57 | K21.03050 | 389 262 0713 | | 1 | 3.VİTES DİŞLİSİ 28 DİŞ | GEAR 3rd 28 T. | | | ♦ | ♦ |
| 58 | | 014 981 3910 | (014 981 5210) | 1 | 3.VİTES MASURA BİLYA | NEEDLE CAGE | 85X93X43mm | | ♦ | ♦ |
| 59 | | 389 262 1105 | | 1 | KAMALI MİL (Sağ Diş) | MAIN SHAFT (-R- teeth) | | (C) | ♦ | ♦ |
| 59 | | 389 262 1605 | | 1 | KAMALI MİL (Sol Diş) | MAIN SHAFT (-L- teeth) | | (D) | ♦ | ♦ |
| 59 | | 389 262 2005 | | 1 | KAMALI MİL (Sol Diş) | MAIN SHAFT (-L- teeth) | | (E) | ♦ | ♦ |
| 60 | K21.03810 | 018 981 6610 | (010 981 5310) | 1 | 2.VİTES MASURA BİLYA | NEEDLE CAGE | 85X93X53mm | | ♦ | ♦ |
| 61 | | 389 262 1112 | | 1 | 2.VİTES DİŞLİSİ 32 DİŞ | GEAR 2nd 32 T | | | ♦ | ♦ |
| 62 | K21.03025 | 945 262 0434 | (389 262 0034) | 2 | 1./2.VİTES SENKROMENÇ | ENGAGING RING | | | ♦ | ♦ |
| 63 | K21.03016 | 389 262 0737 | (387 262 0937) | 2 | 1./2.VİTES FRENLEME (Mo) | SYNCHRONIZING CONE / Mo | | | ♦ | ♦ |
| | | | (389 262 1137) | | | | | | | |
| 63 | K21.06287 | 389 262 3237 | | 2 | 1./2.VİTES FRENLEME (Mo) | SYNCHRONIZING CONE / Mo | | vertical striped | ♦ | ♦ |
| 63 | K21.06041 | 945 260 0650 | | 2 | 1./2.VİTES FRENLEME (C) | SYNCHRONIZING CONE / C | | | ♦ | ♦ |
| 64 | K21.03055 | 387 262 0893 | (387 262 0793) | 2 | FRENLEME TELİ | SPRING | | | ♦ | ♦ |
| 65 | K21.03056 | 389 262 0035 | | 1 | 1./2.VİTES YILDIZ DİŞLİ | SYNCHRONIZER HUB | | | ♦ | ♦ |
| 66 | K21.03010 | 389 262 2923 | (389 262 0723) | 1 | 1./2.VİTES HALKA | ENGAGING SLEEVE | | | ♦ | ♦ |
| 67 | | 389 260 4430 | (389 260 0130) | 1 | 1./2.VİTES HİLALİ | SHIFTING FORK | | | ♦ | ♦ |
| 68 | | 389 265 6204 | | 1 | 1./2.VİTES HİLAL ÇITASI | SHIFTING ROD | | | ♦ | ♦ |
| 69 | K21.04343 | 387 262 2073 | | 1 | 1./2.VİTES YILDIZ DİŞLİ SEKMANI | RETAINING RING | 2,40mm | | ♦ | ♦ |
| 69 | K21.06687 | 387 262 2173 | | 1 | 1./2.VİTES YILDIZ DİŞLİ SEKMANI | RETAINING RING | 2,45mm | | ♦ | ♦ |
| 69 | K21.04342 | 007 994 0041 | (387 262 2273) | 1 | 1./2.VİTES YILDIZ DİŞLİ SEKMANI | RETAINING RING | 2,50mm | | ♦ | ♦ |
| 69 | K21.04359 | 387 262 2373 | | 1 | 1./2.VİTES YILDIZ DİŞLİ SEKMANI | RETAINING RING | 2,55mm | | ♦ | ♦ |
| 69 | K21.04345 | 387 262 2473 | | 1 | 1./2.VİTES YILDIZ DİŞLİ SEKMANI | RETAINING RING | 2,60mm | | ♦ | ♦ |
| 69 | K21.07021 | 387 262 2573 | | 1 | 1./2.VİTES YILDIZ DİŞLİ SEKMANI | RETAINING RING | 2,65mm | | ♦ | ♦ |
| 69 | K21.04344 | 387 262 7973 | | 1 | 1./2.VİTES YILDIZ DİŞLİ SEKMANI | RETAINING RING | 2,70mm | | ♦ | ♦ |
| 69 | K21.07022 | 387 262 8073 | | 1 | 1./2.VİTES YILDIZ DİŞLİ SEKMANI | RETAINING RING | 2,75mm | | ♦ | ♦ |
| 69 | K21.06588 | 387 262 8173 | | 1 | 1./2.VİTES YILDIZ DİŞLİ SEKMANI | RETAINING RING | 2,80mm | | ♦ | ♦ |
| 70 | | 014 981 4310 | (013 981 1910) | 1 | 1.VİTES MASURA BİLYA | NEEDLE CAGE | 75X83X45mm | | ♦ | ♦ |
| | | | (014 981 5310) | | | | | | | |
| 71 | | 389 262 1411 | | 1 | 1.VİTES DİŞLİSİ 38 DİŞ | GEAR 1st 38 T . | | | ♦ | ♦ |
| 72 | K21.03059 | 389 262 0135 | | 1 | GERİ VİTES YILDIZ DİŞLİ | SYNCHRONIZER HUB | | | ♦ | ♦ |
| 73 | K21.03060 | 389 262 1723 | (389 262 0023) | 1 | GERİ VİTES HALKASI | ENGAGING SLEEVE | | | ♦ | ♦ |
| 73 | K21.03061 | 389 262 1823 | (389 262 0923) | 1 | GERİ VİTES HALKASI | ENGAGING SLEEVE | | | ♦ | ♦ |
| 74 | K21.03410 | 947 265 0249 | (945 265 0149) | 2 | GERİ VİTES HİLAL PABUCU | SLIDING PAD | | | ♦ | ♦ |
| 75 | | 389 260 4730 | (389 260 1630) | 1 | GERİ VİTES HİLALİ | SHIFTING FORK | | | ♦ | ♦ |
| 76 | | 389 265 3204 | | 1 | GERİ VİTES HİLAL ÇITASI | SHIFTING ROD | | | ♦ | ♦ |
| 77 | K21.03065 | 389 262 0150 | | 1 | GERİ VİTES MASURA BİLYA ÇANAĞI | BEARING RACE | | (C)(D) | ♦ | ♦ |
| 77 | | 389 262 1250 | | 1 | GERİ VİTES MASURA BİLYA ÇANAĞI | BEARING RACE | | (E) | ♦ | ♦ |
| 78 | K21.03813 | 013 981 1810 | (013 981 2610) | 1 | GERİ VİTES MASURA BİLYA | NEEDLE CAGE | 78X86X33mm | | ♦ | ♦ |
| | | | (013 981 1710) | | | | | | | |
| 79 | | 389 262 1633 | | 1 | GERİ VİTES DİŞLİSİ 34 DİŞ | REVERSE GEAR 34 T. | | | ♦ | ♦ |

NOTES :
Parts encoded alphabetic and numaric are used together.

NOTLAR :
Alfabetik ve rakam ile kodlanan parçalar birlikte kullanılır.





Original parts names, oem numbers, symbols and descriptions used in this catalogue are for reference purposes only.

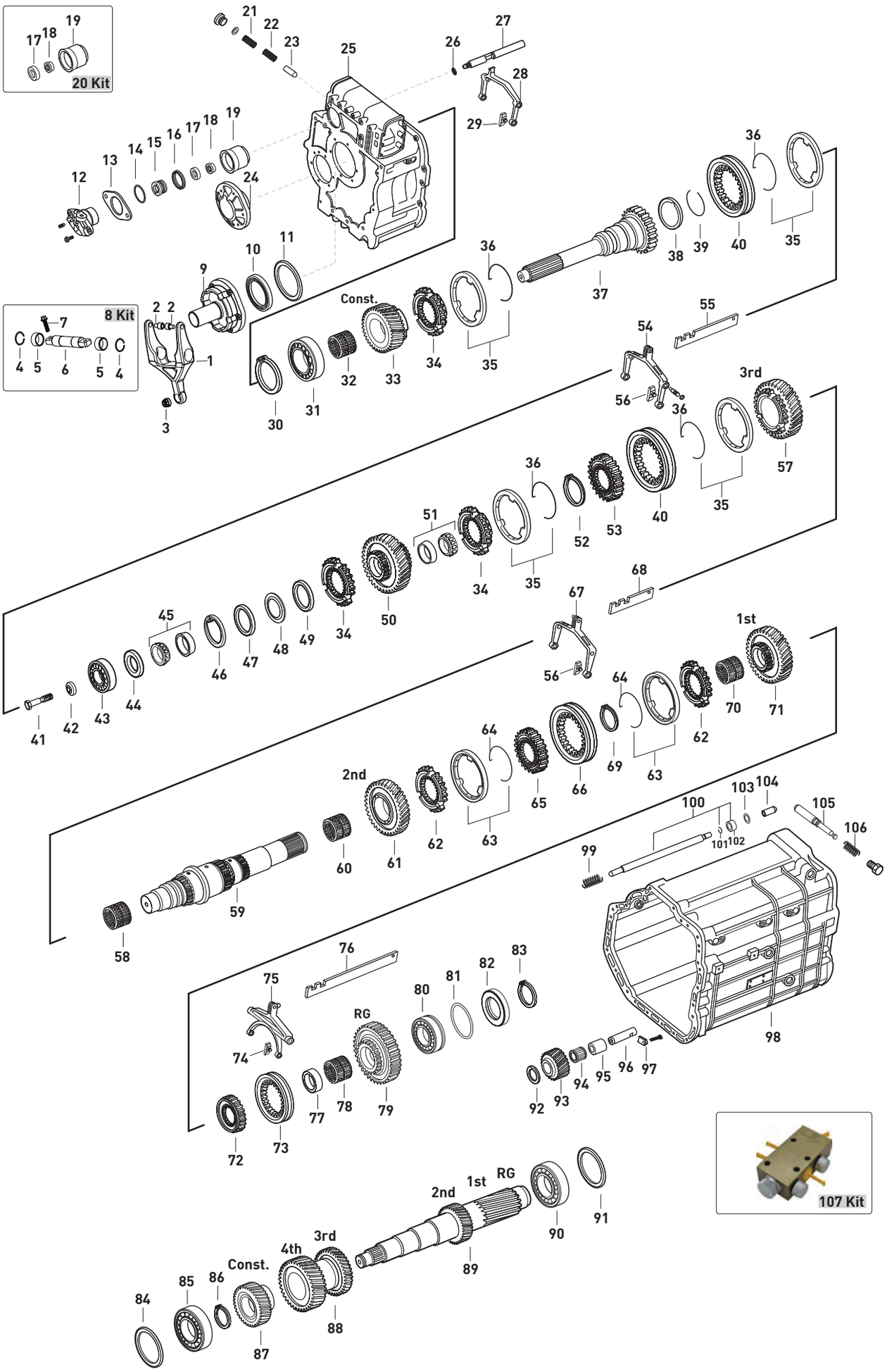




Original parts names, oem numbers, symbols and descriptions used in this catalogue are for reference purposes only.

| Fig. | Kacmaz No | Oem No | Oem Old No | Pcs. | Ürün Tanımı | Description | Sizes | Not | G125-16/14,0 | G135-16/11,9 |
|---|---|---|---|---|---|---|---|---|---|---|
| 80 | | 008 981 8005 | (008 981 7105) | 1 | KAMALI MİL ARKA BİLYA | ROLLER BEARING | 60X130X10,8mm | | ♦ | ♦ |
| 81 | K21.04182 | 389 262 3552 | | 1 | KAMALI MİL ARKA BİLYA RAYNELİ | THRUST WASHER | 0,10mm | | ♦ | ♦ |
| 81 | K21.04184 | 389 262 3652 | | 1 | KAMALI MİL ARKA BİLYA RAYNELİ | THRUST WASHER | 0,15mm | | ♦ | ♦ |
| 81 | K21.04152 | 389 262 3752 | | 1 | KAMALI MİL ARKA BİLYA RAYNELİ | THRUST WASHER | 0,20mm | | ♦ | ♦ |
| 81 | K21.94152 | | | 1 | KAMALI MİL ARKA BİLYA RAYNELİ | THRUST WASHER | 0,30mm | | ♦ | ♦ |
| 81 | K21.04183 | 389 262 3852 | | 1 | KAMALI MİL ARKA BİLYA RAYNELİ | THRUST WASHER | 0,40mm | | ♦ | ♦ |
| 81 | K21.94183 | | | 1 | KAMALI MİL ARKA BİLYA RAYNELİ | THRUST WASHER | 0,50mm | | ♦ | ♦ |
| 81 | K21.84183 | | | 1 | KAMALI MİL ARKA BİLYA RAYNELİ | THRUST WASHER | 0,60mm | | ♦ | ♦ |
| 81 | K21.74183 | | | 1 | KAMALI MİL ARKA BİLYA RAYNELİ | THRUST WASHER | 0,70mm | | ♦ | ♦ |
| 81 | K21.04185 | 389 262 3952 | | 1 | KAMALI MİL ARKA BİLYA RAYNELİ | THRUST WASHER | 0,80mm | | ♦ | ♦ |
| 81 | K21.06718 | 010 990 8382 | | 1 | KAMALI MİL ARKA BİLYA RAYNELİ | THRUST WASHER | 1,00mm | | ♦ | ♦ |
| 82 | | 389 262 6352 | | 1 | GÜNEŞ DİŞLİ PULU | THRUST WASHER | 14,60mm | | ♦ | ♦ |
| 83 | | 006 994 7341 | | 1 | KAMALI MİL ARKA SEKMANI | RETAINING RING | | | ♦ | ♦ |
| 84 | K21.04192 | 406 337 0252 | | 1 | GRUP MİLİ ÖN BİLYA RAYNELİ | THRUST WASHER | 0,10mm | | ♦ | ♦ |
| 84 | K21.04150 | 406 337 0352 | | 1 | GRUP MİLİ ÖN BİLYA RAYNELİ | THRUST WASHER | 0,20mm | | ♦ | ♦ |
| 84 | K21.94150 | | | 1 | GRUP MİLİ ÖN BİLYA RAYNELİ | THRUST WASHER | 0,25mm | | ♦ | ♦ |
| 84 | K21.04338 | 406 337 0452 | | 1 | GRUP MİLİ ÖN BİLYA RAYNELİ | THRUST WASHER | 0,30mm | | ♦ | ♦ |
| 84 | K21.04196 | 389 263 5352 | (389 263 3252) | 1 | GRUP MİLİ ÖN BİLYA RAYNELİ | THRUST WASHER | 0,40mm | | ♦ | ♦ |
| 84 | K21.04194 | 389 263 3352 | | 1 | GRUP MİLİ ÖN BİLYA RAYNELİ | THRUST WASHER | 0,45mm | | ♦ | ♦ |
| 84 | K21.06719 | 389 263 5652 | | 1 | GRUP MİLİ ÖN BİLYA RAYNELİ | THRUST WASHER | 0,49mm | | ♦ | ♦ |
| 84 | K21.04197 | 389 263 5852 | (389 263 3552) | 1 | GRUP MİLİ ÖN BİLYA RAYNELİ | THRUST WASHER | 0,55mm | | ♦ | ♦ |
| 84 | K21.04340 | 389 263 6052 | | 1 | GRUP MİLİ ÖN BİLYA RAYNELİ | THRUST WASHER | 0,61mm | | ♦ | ♦ |
| 84 | K21.04198 | 389 263 6352 | (389 263 3852) | 1 | GRUP MİLİ ÖN BİLYA RAYNELİ | THRUST WASHER | 0,70mm | | ♦ | ♦ |
| 84 | K21.04154 | 389 263 3952 | | 1 | GRUP MİLİ ÖN BİLYA RAYNELİ | THRUST WASHER | 0,75mm | | ♦ | ♦ |
| 84 | K21.04199 | 389 263 6852 | | 1 | GRUP MİLİ ÖN BİLYA RAYNELİ | THRUST WASHER | 0,85mm | | ♦ | ♦ |
| 84 | K21.04200 | 389 263 7352 | | 1 | GRUP MİLİ ÖN BİLYA RAYNELİ | THRUST WASHER | 1,00mm | | ♦ | ♦ |
| 84 | K21.04201 | 389 263 7852 | | 1 | GRUP MİLİ ÖN BİLYA RAYNELİ | THRUST WASHER | 1,15mm | | ♦ | ♦ |
| 84 | K21.04202 | 389 263 8352 | | 1 | GRUP MİLİ ÖN BİLYA RAYNELİ | THRUST WASHER | 1,30mm | | ♦ | ♦ |
| 85 | | 010 981 5905 | (001 981 3705) | 1 | GRUP MİLİ ÖN BİLYA | ROLLER BEARING | 45X100X27,25mm | | ♦ | ♦ |
| | | | (010 981 6305) | | | | | | | |
| 86 | | 387 262 2773 | | 1 | GRUP MİLİ ÖN BİLYA SEKMANI | RETAINING RING | 2,00mm | | ♦ | ♦ |
| 87 | | 389 263 0510 | | 1 | TAKVİYE DİŞLİ KARŞILIĞI 27 DİŞ | CONSTANT GEAR 27 T. | | | ♦ | |
| 87 | | 389 263 0610 | | 1 | TAKVİYE DİŞLİ KARŞILIĞI 23 DİŞ | CONSTANT GEAR 23 T. | | | | ♦ |
| 88 | | 389 263 1513 | (389 263 0813) | 1 | 3./4.VİT. DİŞLİ KARŞILIĞI 21/25 DİŞ | DOUBLE GEAR 3rd/4th 21/25T | | | ♦ | ♦ |
| 89 | | 389 263 0102 | | 1 | GRUP MİLİ 14/17 DİŞ | COUNTER SHAFT 14/17 T. | | | ♦ | ♦ |
| 89 | | 389 263 0702 | | 1 | GRUP MİLİ 14/17 DİŞ | COUNTER SHAFT 14/17 T. | | | ♦ | ♦ |
| 90 | | 010 981 5205 | (010 981 2705) | 1 | GRUP MİLİ ARKA BİLYA | ROLLER BEARING | 55X110X28,4mm | | ♦ | ♦ |
| | | | (010 981 3005) | | | | | | | |
| 91 | | 385 283 3152 | | 1 | GRUP MİLİ ARKA BİLYA RAYNELİ | THRUST WASHER | 0,10mm | | ♦ | ♦ |
| 91 | | 389 283 0052 | | 1 | GRUP MİLİ ARKA BİLYA RAYNELİ | THRUST WASHER | 0,15mm | | ♦ | ♦ |
| 91 | | 389 263 1952 | | 1 | GRUP MİLİ ARKA BİLYA RAYNELİ | THRUST WASHER | 0,60mm | | ♦ | ♦ |
| 91 | | 389 263 2052 | | 1 | GRUP MİLİ ARKA BİLYA RAYNELİ | THRUST WASHER | 0,65mm | | ♦ | ♦ |
| 91 | | 389 263 2152 | | 1 | GRUP MİLİ ARKA BİLYA RAYNELİ | THRUST WASHER | 0,70mm | | ♦ | ♦ |
| 91 | | 389 263 2252 | | 1 | GRUP MİLİ ARKA BİLYA RAYNELİ | THRUST WASHER | 0,75mm | | ♦ | ♦ |
| 91 | | 389 263 2352 | | 1 | GRUP MİLİ ARKA BİLYA RAYNELİ | THRUST WASHER | 0,80mm | | ♦ | ♦ |
| 91 | | 389 263 2452 | | 1 | GRUP MİLİ ARKA BİLYA RAYNELİ | THRUST WASHER | 0,85mm | | ♦ | ♦ |
| 91 | | 389 263 2552 | | 1 | GRUP MİLİ ARKA BİLYA RAYNELİ | THRUST WASHER | 0,90mm | | ♦ | ♦ |
| 91 | | 389 263 2652 | | 1 | GRUP MİLİ ARKA BİLYA RAYNELİ | THRUST WASHER | 0,95mm | | ♦ | ♦ |
| 91 | | 389 263 2752 | | 1 | GRUP MİLİ ARKA BİLYA RAYNELİ | THRUST WASHER | 1,00mm | | ♦ | ♦ |
| 91 | | 389 263 2852 | | 1 | GRUP MİLİ ARKA BİLYA RAYNELİ | THRUST WASHER | 1,05mm | | ♦ | ♦ |
| 91 | | 389 263 2952 | | 1 | GRUP MİLİ ARKA BİLYA RAYNELİ | THRUST WASHER | 1,10mm | | ♦ | ♦ |
| 91 | | 389 263 3052 | | 1 | GRUP MİLİ ARKA BİLYA RAYNELİ | THRUST WASHER | 1,15mm | | ♦ | ♦ |
| 92 | K21.04209 | 389 263 0062 | | 2 | KÜÇÜK GERİ VİTES PULU | THRUST WASHER | 1,00mm | | ♦ | ♦ |

NOTES :
Parts encoded alphabetic and numaric are used together.

NOTLAR :
Alfabetik ve rakam ile kodlanan parçalar birlikte kullanılır.





Original parts names, oem numbers, symbols and descriptions used in this catalogue are for reference purposes only.

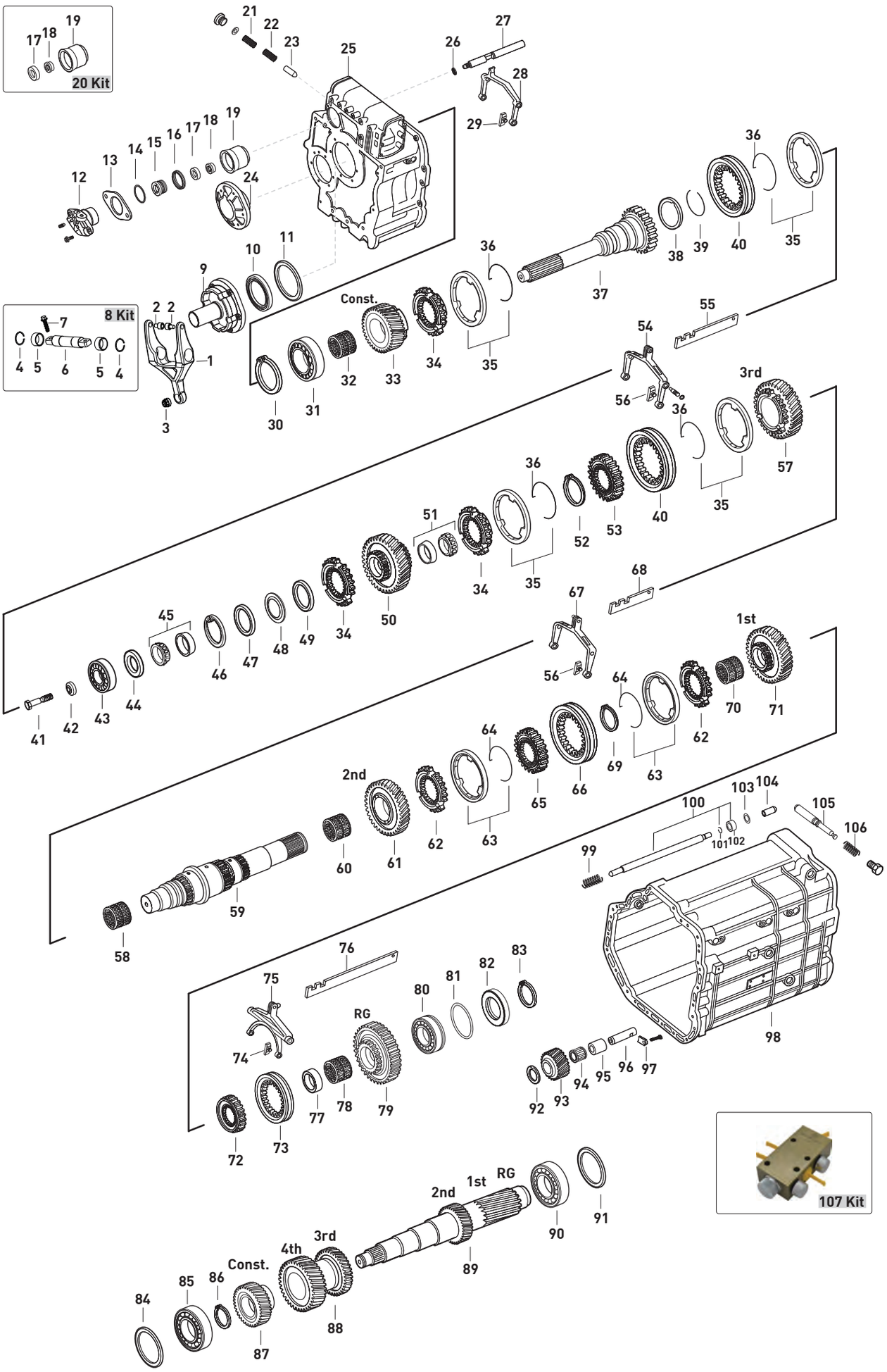




Original parts names, oem numbers, symbols and descriptions used in this catalogue are for reference purposes only.

| Fig. | Kacmaz No | Oem No | Oem Old No | Pcs. | Ürün Tanımı | Description | Sizes | Not | G125-16/14,0 | G135-16/11,9 |
|---|---|---|---|---|---|---|---|---|---|---|
| 93 | | 389 263 0131 | | 1 | KÜÇÜK GERİ VİTES DİŞLİ 18 DİŞ | REVERSE IDLER GEAR 18 T. | | (K) | ♦ | ♦ |
| 93 | | 389 263 1431 | | 1 | KÜÇÜK GERİ VİTES DİŞLİ 18 DİŞ | REVERSE IDLER GEAR 18 T. | | (L) | ♦ | ♦ |
| 94 | K21.03843 | 021 981 5610 | (013 981 2010) | 1 | KÜÇÜK GERİ VİTES MASURA BİLYA | NEEDLE CAGE | 42X50X40mm | | ♦ | ♦ |
| 95 | | 389 263 0150 | | 1 | K.GERİ VİTES MASURA BİLYA ÇANAĞI | BUSHING | | (K) | ♦ | ♦ |
| 95 | | 389 263 0950 | | 1 | K.GERİ VİTES MASURA BİLYA ÇANAĞI | BUSHING | | (L) | ♦ | ♦ |
| 96 | | 389 263 0130 | | 1 | KÜÇÜK GERİ VİTES PİMİ | PIN | | | ♦ | ♦ |
| 97 | K21.07010 | 945 263 0041 | | 1 | KÜÇÜK GERİ VİTES PİM KİLİTLEMESİ | KEY | | | ♦ | ♦ |
| 98 | | 389 261 3403 | | 1 | ŞANZIMAN ORTA GÖVDE | HOUSING | | | ♦ | ♦ |
| 98 | | 389 261 7103 | | 1 | ŞANZIMAN ORTA GÖVDE | HOUSING | | | ♦ | ♦ |
| 98 | | 389 261 9626 | | 1 | ŞANZIMAN ORTA GÖVDE | HOUSING | | | ♦ | ♦ |
| 99 | | 389 993 0501 | | 1 | KİLİTLEME MİL YAYI | SPRING | | | ♦ | ♦ |
| 100 | K21.03394 | 389 268 4825 | | 1 | KİLİTLEME MİLİ | SHIFTING ROD | | | ♦ | ♦ |
| 101 | | 007993 012200 | | 1 | KİLİTLEME MİLİ SEKMANI | RETAINING RING | | | ♦ | ♦ |
| 102 | | 389 268 0051 | | 1 | KİLİTLEME MİL BURCU | SPACER RING | | | ♦ | ♦ |
| 103 | | 000998 006019 | | 1 | KİLİTLEME MİLİ AYAR RAYNELİ | FITTED WASHER | 0,10mm | | ♦ | ♦ |
| 103 | | 000998 006020 | | 1 | KİLİTLEME MİLİ AYAR RAYNELİ | FITTED WASHER | 0,20mm | | ♦ | ♦ |
| 103 | | 000988 006021 | | 1 | KİLİTLEME MİLİ AYAR RAYNELİ | FITTED WASHER | 0,30mm | | ♦ | ♦ |
| 103 | | 000988 006013 | | 1 | KİLİTLEME MİLİ AYAR RAYNELİ | FITTED WASHER | 0,50mm | | ♦ | ♦ |
| 103 | | 000988 006001 | | 1 | KİLİTLEME MİLİ AYAR RAYNELİ | FITTED WASHER | 1,00mm | | ♦ | ♦ |
| 104 | K21.03489 | 389 268 0674 | | 1 | KİLİTLEME MİL FİŞEĞİ | PIN | | | ♦ | ♦ |
| 105 | K21.03486 | 389 267 0974 | | 1 | AĞIR SERİ KİLİTLEME MİLİ | PIN | | | ♦ | ♦ |
| 106 | K21.06006 | 389 993 3401 | (389 993 0601) | 1 | AĞIR SERİ KİLİTLEME YAYI | SPRING | | | ♦ | ♦ |
| 107 | K21.06851 | 001 260 2057 | (001 260 2657) | 1 | VALF | VALVE | | | ♦ | ♦ |

NOTES :
Parts encoded alphabetic and numaric are used together.

NOTLAR :
Alfabetik ve rakam ile kodlanan parçalar birlikte kullanılır.





Original parts names, oem numbers, symbols and descriptions used in this catalogue are for reference purposes only.

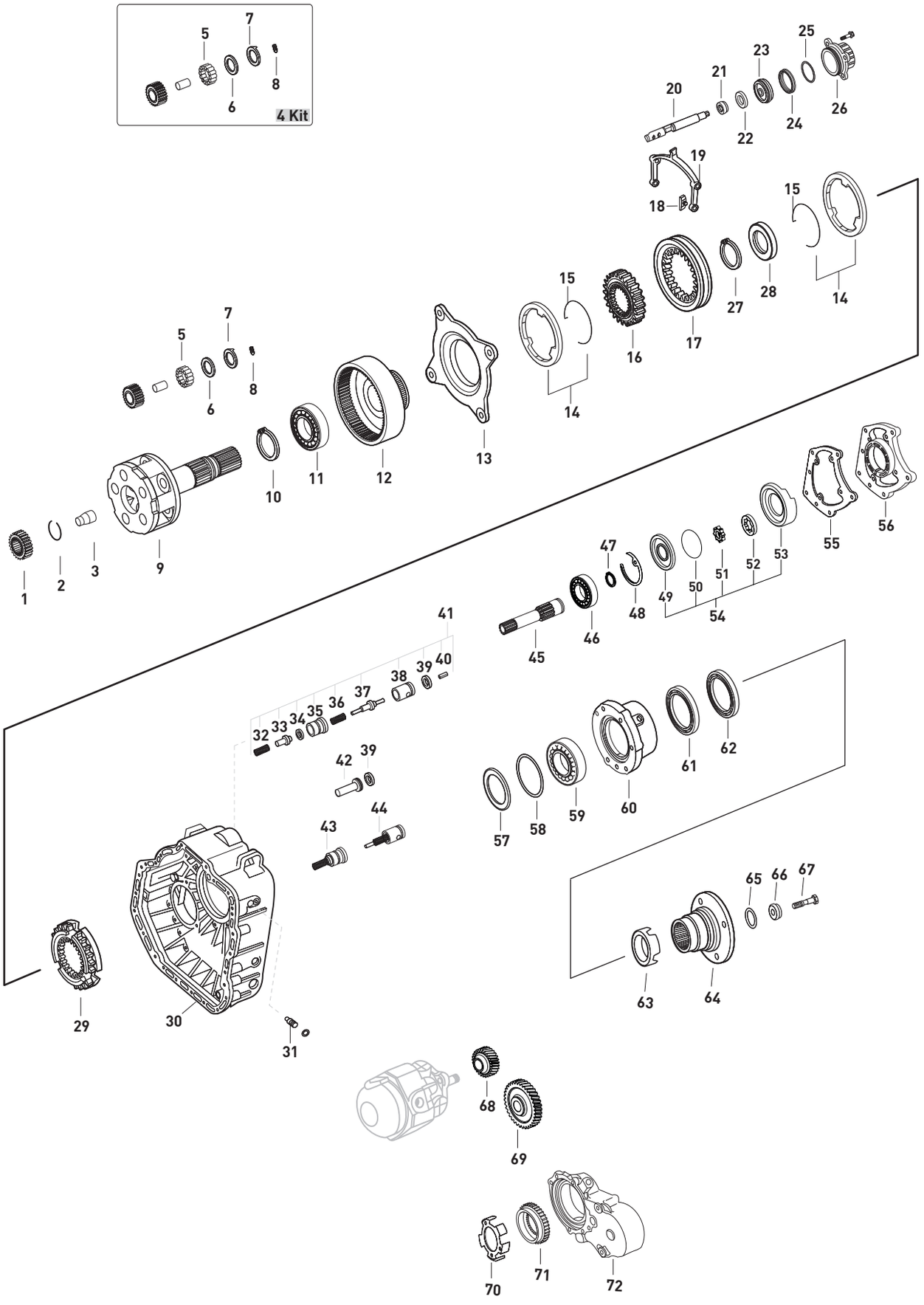




Original parts names, oem numbers, symbols and descriptions used in this catalogue are for reference purposes only.

| Fig. | Kacmaz No | Oem No | Oem Old No | Pcs. | Ürün Tanımı | Description | Sizes | Not | G125-16/14,0 | G135-16/11,9 |
|---|---|---|---|---|---|---|---|---|---|---|
| 1 | | 389 262 0109 | | 1 | GÜNEŞ DİŞLİ 25 DİŞ | SUN GEAR 25 T. | | OLD | ♦ | ♦ |
| 1 | | 389 262 0309 | | 1 | GÜNEŞ DİŞLİ 25 DİŞ | SUN GEAR 25 T. | | NEW | ♦ | ♦ |
| 2 | | 007993 040200 | | 1 | ŞANZ.HEYKEL YAĞ BORU SEKMANI | SNAP RING | | (A) | ♦ | ♦ |
| 2 | | 007993 060200 | | 1 | ŞANZ.HEYKEL YAĞ BORU SEKMANI | SNAP RING | | (B) | ♦ | ♦ |
| 3 | | 389 269 0134 | | 1 | ŞANZIMAN HEYKEL YAĞ BORUSU | OIL TUBE | | (A) | ♦ | ♦ |
| 3 | | 389 269 0334 | | 1 | ŞANZIMAN HEYKEL YAĞ BORUSU | OIL TUBE | | (B) | ♦ | ♦ |
| 4 | | 389 260 0197 | | 1 | HEYKEL KOZA DİŞLİ TAKIMI | PLANETARY GEAR SET | | OLD | ♦ | ♦ |
| 4 | | 389 260 0397 | | 1 | HEYKEL KOZA DİŞLİ TAKIMI | PLANETARY GEAR SET | | NEW | ♦ | ♦ |
| 5 | | 001 981 3287 | | 125 | HEYKEL KOZA DİŞLİ TANE BİLYA | NEEDLE ROLLER | 5X28,8mm | | ♦ | ♦ |
| 6 | K21.04074 | 389 262 0162 | (389 262 6462) | 10 | HEYKEL KOZA DİŞLİ PULU | THRUST WASHER | | | ♦ | ♦ |
| | | | (389 262 0562) | | | | | | | |
| 7 | K21.06982 | 389 262 0262 | | 10 | HEYKEL KOZA DİŞLİ PULU | THRUST WASHER | | | ♦ | ♦ |
| 8 | K21.03418 | 000914 006109 | | 5 | HEYKEL KOZA DİŞLİ VİDASI | THREADED PIN | M6X14 | | ♦ | ♦ |
| 9 | | 389 260 0761 | | 1 | ŞANZIMAN HEYKELİ | PLANETARY CARRIER | | (B) OLD | ♦ | ♦ |
| 9 | | 389 260 7861 | (389 260 2761) | 1 | ŞANZIMAN HEYKELİ | PLANETARY CARRIER | | (A) NEW | ♦ | ♦ |
| 10 | K21.06864 | 000472 130000 | | 1 | ÇEMBER DİŞLİ BİLYA SEKMANI | RETAINING RING | 130X4mm | | ♦ | ♦ |
| 11 | K21.03614 | 008 981 1325 | (004 981 8725) | 1 | ÇEMBER DİŞLİ BİLYASI | ROLLER BEARING | 90X130X14mm | | ♦ | ♦ |
| | | | (004 981 8825) | | | | | | | |
| | | | (004 981 9425) | | | | | | | |
| 12 | | 389 262 0308 | | 1 | ÇEMBER DİŞLİ 80 DİŞ | ANNULUS 80 T. | | | ♦ | ♦ |
| 13 | K21.03018 | 389 260 2036 | | 1 | TABLA SENKROMENÇ | FOLLOWER RING | | NEW | ♦ | ♦ |
| 13 | K21.03076 | 389 260 0936 | | 1 | TABLA SENKROMENÇ | FOLLOWER RING | | OLD | ♦ | ♦ |
| 14 | K21.03017 | 389 262 0537 | (389 262 0037) | 2 | AĞIR SERİ FRENLEME (Mo) | SYNCHRONIZING CONE / Mo | | | ♦ | ♦ |
| | | | (389 262 0137) | | | | | | | |
| | | | (389 262 3337) | | | | | | | |
| 14 | K21.03078 | 945 260 0850 | | 2 | AĞIR SERİ FRENLEME (C) | SYNCHRONIZING CONE / C | | | ♦ | ♦ |
| 15 | K21.03077 | 389 262 0293 | | 2 | FRENLEME TELİ | SPRING | | | ♦ | ♦ |
| 16 | K21.03079 | 389 262 4935 | (389 262 2035) | 1 | AĞIR SERİ YILDIZ DİŞLİ 73 DİŞ | SYNCHRONIZER HUB 73 T. | | NEW | ♦ | ♦ |
| | | | (400 262 0335) | | | | | | | |
| 16 | K21.03081 | 389 262 0535 | | 1 | AĞIR SERİ YILDIZ DİŞLİ 72 DİŞ | SYNCHRONIZER HUB 72 T. | | OLD | ♦ | ♦ |
| 17 | K21.03028 | 945 262 6623 | (945 262 0823) | 1 | AĞIR SERİ HALKA 73 DİŞ | ENGAGING SLEEVE 73 T. | | NEW | ♦ | ♦ |
| | | | (389 262 1623) | | | | | | | |
| | | | (389 262 3823) | | | | | | | |
| | | | (945 262 2623) | | | | | | | |
| 17 | K21.03420 | 389 262 1523 | (389 262 0123) | 1 | AĞIR SERİ HALKA 72 DİŞ | ENGAGING SLEEVE 72 T. | | OLD | ♦ | ♦ |
| 18 | K21.03406 | 389 265 2449 | (945 265 0349) | 2 | AĞIR SERİ HİLAL PABUCU | SLIDING PAD | | | ♦ | ♦ |
| | | | (387 265 0049) | | | | | | | |
| | | | (389 265 0949) | | | | | | | |
| 19 | K21.06411 | 947 265 1701 | (389 265 0901) | 1 | AĞIR SERİ HİLALİ | SHIFTING FORK | | | ♦ | ♦ |
| | | | (930 265 0001) | | | | | | | |
| | | | (947 265 0801) | | | | | | | |
| 20 | | 389 267 3517 | | 1 | AĞIR SERİ HİLAL MİLİ | SHIFTING ROD | | | ♦ | ♦ |
| 20 | | 945 267 2117 | (389 267 7317) | 1 | AĞIR SERİ HİLAL MİLİ | SHIFTING ROD | | | ♦ | ♦ |
| 21 | K21.03523 | 000 267 0197 | (000 267 0397) | 1 | AĞIR SERİ HİLAL MİL KEÇESİ | OIL SEAL | 22X32X8mm | | ♦ | ♦ |
| 22 | K21.04178 | 387 267 0650 | (387 267 0250) | 1 | HİLAL MİL BURCU | BUSHING | 34X22X8mm | | ♦ | ♦ |
| 23 | K21.06975 | 960 267 0818 | (389 267 1018) | 1 | AĞIR SERİ HİLAL MİL PİSTONU | PISTON | | | ♦ | ♦ |
| | | | (389 267 0118) | | | | | | | |
| 24 | K21.03525 | 024 997 8347 | (020 997 6747) | 1 | AĞIR SERİ SİLİNDİR KEÇESİ | SEAL RING | 77X90X17mm | | ♦ | ♦ |
| | | | (014 997 3647) | | | | | | | |
| | | | (014 997 5147) | | | | | | | |
| 25 | K21.06399 | 013 997 7548 | | 1 | AĞIR SERİ SİLİNDİR ORİNGİ | O-RING | 89,5X3mm | | ♦ | ♦ |
| 26 | K21.03540 | 945 267 1119 | (389 267 1319) | 1 | AĞIR SERİ SİLİNDİRİ | SHIFTING CYLINDER | | | ♦ | ♦ |
| | | | (389 267 4219) | | | | | | | |

NOTES :
Alfabetic letters are used in conjunction with the encoded parts.

NOTLAR :
Alfabetik harfler ile kodlanan parçalar birlikte kullanılır.





Original parts names, oem numbers, symbols and descriptions used in this catalogue are for reference purposes only.

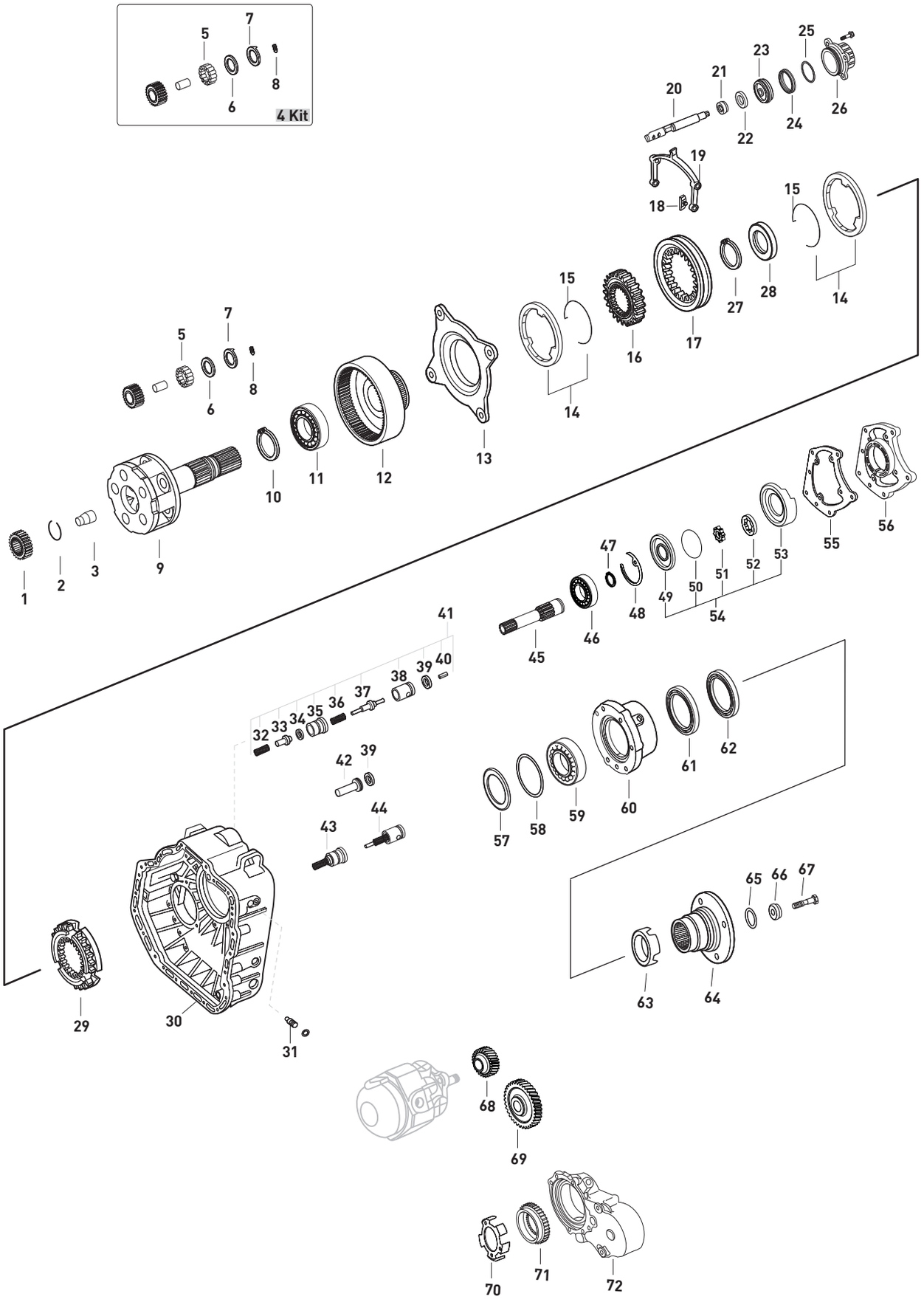




Original parts names, oem numbers, symbols and descriptions used in this catalogue are for reference purposes only.

| Fig. | Kacmaz No | Oem No | Oem Old No | Pcs. | Ürün Tanımı | Description | Sizes | Not | G125-16/14,0 | G135-16/11,9 |
|---|---|---|---|---|---|---|---|---|---|---|
| 27 | K21.04356 | 000471 120000 | | 1 | AĞIR SERİ YILDIZ DİŞLİ SEKMANI | RETAINING RING | | | ♦ | ♦ |
| 28 | K21.04076 | 389 262 0251 | | 1 | ŞANZIMAN HEYKELİ ARA PULU | SPACER RING | | | ♦ | ♦ |
| 29 | K21.03022 | 389 262 9134 | | 1 | SERİ SENKROMENÇ | ENGAGING RING | | NEW | ♦ | ♦ |
| 29 | K21.03020 | 389 262 4034 | | 1 | SERİ SENKROMENÇ | ENGAGING RING | | NEW | ♦ | ♦ |
| 29 | K21.03082 | 389 262 2334 | (389 262 1934) | 1 | SERİ SENKROMENÇ | ENGAGING RING | | OLD | ♦ | ♦ |
| | | | (389 262 0934) | | | | | | | |
| 30 | | 389 261 5126 | (389 261 4926) | 1 | ŞANZIMAN ARKA GÖVDE | HOUSING | | NEW | ♦ | ♦ |
| 30 | | 389 261 4603 | (389 261 2703) | 1 | ŞANZIMAN ARKA GÖVDE | HOUSING | | OLD | ♦ | ♦ |
| 31 | K21.06026 | 945 265 3074 | (945 265 1474) | 2 | AĞIR SERİ HİLAL CİVATASI | PIN | | | ♦ | ♦ |
| | | | (945 265 1774) | | | | | | | |
| | | | (945 265 2674) | | | | | | | |
| 32 | | 389 993 5301 | | 1 | YAĞ BASINÇ YAYI | SPRING | | | ♦ | ♦ |
| 33 | | 389 269 1026 | (389 269 0926) | 1 | YAĞ BASINÇ VALFİ | SELECTOR VALVE | | | ♦ | ♦ |
| 34 | K21.04210 | 013 997 0148 | (020 997 8348) | 1 | YAĞ BASINÇ ORİNGİ | O-RING | 13,3X2,4mm | | ♦ | ♦ |
| 35 | | 389 269 1444 | (389 269 0744) | 1 | YAĞ BASINÇ VALF GÖVDESİ | VALVE INSERT | | | ♦ | ♦ |
| 36 | | 389 993 4401 | | 1 | YAĞ BASINÇ VALF MİL YAYI | SPRING | 11,5X41,9X1mm | | ♦ | ♦ |
| 37 | | 389 269 0826 | | 1 | YAĞ BASINÇ VALF MİLİ | SELECTOR VALVE | | | ♦ | ♦ |
| 38 | | 389 269 0844 | | 1 | YAĞ BASINÇ VALF TOPU | BALL | | | ♦ | ♦ |
| 39 | K21.04212 | 013 997 0048 | (020 997 8248) | 1 | YAĞ BASINÇ VALF ORİNGİ | O-RING | 19,2X3mm | | ♦ | ♦ |
| 40 | | 001481 004001 | | 1 | EMNİYET PİMİ | CLAMPING SLEEVE | | | ♦ | ♦ |
| 41 | K21.06962 | 655 260 0157 | | Kit | YAĞ BASINÇ VALFİ KOMPLE | VALVE KIT | | | ♦ | ♦ |
| 42 | K21.06979 | 389 265 0176 | (389 265 0076) | 1 | YAĞ BASINÇ VALFİ ALIN FİBERİ | WASHER | | | ♦ | ♦ |
| 43 | K21.06953 | 960 260 1057 | | Kit | YAĞ BASINÇ VALFİ KOMPLE | VALVE KIT | | | ♦ | ♦ |
| 44 | K21.06973 | 960 260 1257 | | Kit | YAĞ BASINÇ VALFİ KOMPLE | VALVE KIT | | | ♦ | ♦ |
| 45 | K21.03085 | 947 264 0005 | (389 269 0310) | 1 | YAĞ POMPA MİLİ | OIL PUMP SHAFT | | | ♦ | ♦ |
| | | | (389 269 1210) | | | | | | | |
| 46 | K21.03613 | 004 981 9225 | (004 981 8625) | 1 | PTO MİL BİLYASI | ROLLER BEARING | 45X75X16mm | | ♦ | ♦ |
| | | | (004 981 9025) | | | | | | | |
| 47 | K21.06964 | 000471 045000 | (003 994 3741) | 1 | PTO MİL BİLYA SEKMANI | RETAINING RING | 1,75mm | | ♦ | ♦ |
| 48 | K21.94304 | | | 1 | YAĞ POMPA PULU | SPACER WASHER | 0,70mm | | ♦ | ♦ |
| 48 | K21.04304 | 389 262 6254 | | 1 | YAĞ POMPA PULU | SPACER WASHER | 0,80mm | | ♦ | ♦ |
| 48 | K21.04303 | 389 262 5954 | | 1 | YAĞ POMPA PULU | SPACER WASHER | 0,90mm | | ♦ | ♦ |
| 48 | K21.04302 | 389 262 5754 | | 1 | YAĞ POMPA PULU | SPACER WASHER | 1,00mm | | ♦ | ♦ |
| 48 | K21.04301 | 389 262 5554 | | 1 | YAĞ POMPA PULU | SPACER WASHER | 1,10mm | | ♦ | ♦ |
| 48 | K21.04305 | 389 262 5354 | | 1 | YAĞ POMPA PULU | SPACER WASHER | 1,20mm | | ♦ | ♦ |
| 49 | K21.03412 | 945 269 0201 | (389 269 2501) | 1 | YAĞ POMPA KAPAĞI | OIL PUMP COVER | | | ♦ | ♦ |
| 50 | K21.03511 | 029 997 5748 | | 1 | YAĞ POMPA KAPAK ORİNGİ | O-RING | 112X2,5mm | | ♦ | ♦ |
| 51 | K21.03413 | 389 269 1406 | (389 269 1506) | 1 | YAĞ POMPA İÇ ROTOR | OIL PUMP GEAR | | | ♦ | ♦ |
| | | | (945 260 0090) | | | | | | | |
| 52 | K21.03414 | 389 269 0706 | (389 269 1206) | 1 | YAĞ POMPA DIŞ ROTOR | ROTOR | | | ♦ | ♦ |
| 53 | K21.03415 | 389 269 3801 | | 1 | YAĞ POMPA GÖVDESİ | OIL PUMP HOUSING | | | ♦ | ♦ |
| 54 | K21.03411 | 389 260 0690 | (389 260 0590) | 1 | YAĞ POMPASI | OIL PUMP | | | ♦ | ♦ |
| 55 | K21.06587 | 389 261 1980 | (389 261 1480) | 1 | PTO KAPAK CONTASI | GASKET | | | ♦ | ♦ |
| 55 | | 389 261 1280 | (389 261 0380) | 1 | PTO KAPAK CONTASI | GASKET | | | ♦ | ♦ |
| 55 | K21.03667 | 945 261 0680 | (945 261 0580) | 1 | PTO KAPAK CONTASI | GASKET | | | ♦ | ♦ |
| | | | (945 261 0080) | | | | | | | |
| 56 | K21.06260 | 389 261 2433 | (389 261 2333) | 1 | PTO KAPAĞI | COVER | | | ♦ | ♦ |
| | | | (389 261 0933) | | | | | | | |
| 56 | | 389 261 0433 | | 1 | PTO KAPAĞI | COVER | | | ♦ | ♦ |
| 57 | K21.04077 | 389 262 3954 | | 1 | ŞANZIMAN HEYKEL AYAR PULU | THRUST WASHER | 3,50mm | | ♦ | ♦ |
| 58 | K21.04081 | 389 262 7754 | | 1 | ŞANZIMAN HEYKELİ AYAR PULU | THRUST WASHER | 1,40mm | | ♦ | ♦ |
| 58 | K21.04139 | 389 262 5152 | | 1 | ŞANZIMAN HEYKELİ AYAR PULU | THRUST WASHER | 0,80mm | | ♦ | ♦ |
| 58 | K21.04080 | 389 262 5052 | | 1 | ŞANZIMAN HEYKELİ AYAR PULU | THRUST WASHER | 0,40mm | | ♦ | ♦ |

NOTES :
Alfabetic letters are used in conjunction with the encoded parts.

NOTLAR :
Alfabetik harfler ile kodlanan parçalar birlikte kullanılır.





Original parts names, oem numbers, symbols and descriptions used in this catalogue are for reference purposes only.

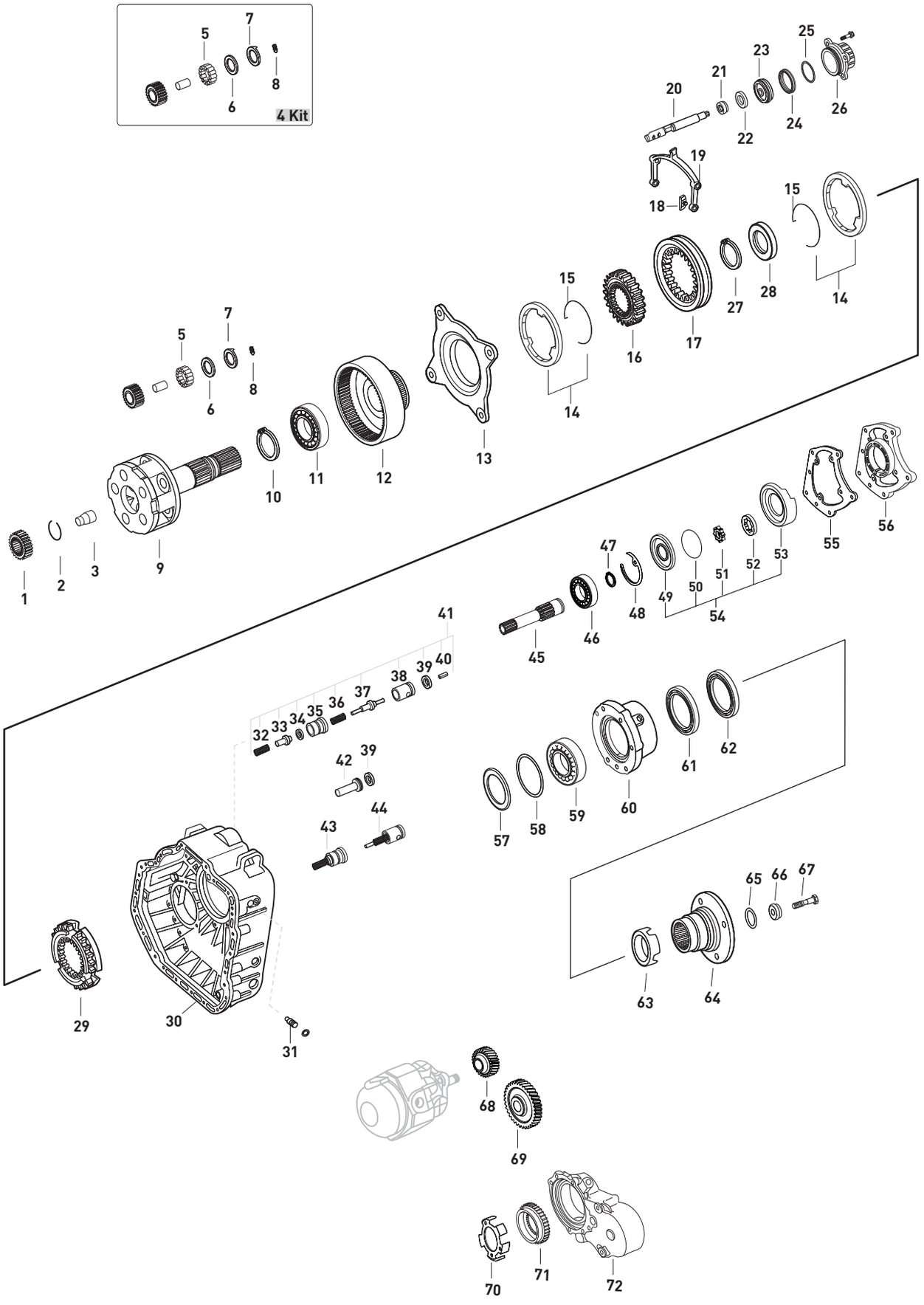




Original parts names, oem numbers, symbols and descriptions used in this catalogue are for reference purposes only.

| Fig. | Kacmaz No | Oem No | Oem Old No | Pcs. | Ürün Tanımı | Description | Sizes | Not | G125-16/14,0 | G135-16/11,9 |
|---|---|---|---|---|---|---|---|---|---|---|
| 58 | K21.04079 | 389 262 7654 | | 1 | ŞANZIMAN HEYKELİ AYAR PULU | THRUST WASHER | 0,25mm | | ♦ | ♦ |
| 58 | K21.04140 | 389 262 4952 | | 1 | ŞANZIMAN HEYKELİ AYAR PULU | THRUST WASHER | 0,20mm | | ♦ | ♦ |
| 58 | K21.04141 | 389 262 4852 | | 1 | ŞANZIMAN HEYKELİ AYAR PULU | THRUST WASHER | 0,15mm | | ♦ | ♦ |
| 58 | K21.04078 | 389 262 4752 | | 1 | ŞANZIMAN HEYKELİ AYAR PULU | THRUST WASHER | 0,10mm | | ♦ | ♦ |
| 59 | K21.03617 | 004 981 9325 | (004 981 8925) | 1 | ŞANZIMAN ARKA BİLYA | ROLLER BEARING | 85X150X28mm | | ♦ | ♦ |
| | | | (004 981 8525) | | | | | | | |
| 60 | K21.06237 | 389 261 0420 | (389 261 0520) | 1 | ŞANZIMAN ARKA KAPAK | COVER | | | ♦ | ♦ |
| 61 | K21.03507 | 013 997 7347 | (015 997 4247) | 1 | ŞANZIMAN ARKA KEÇE | OIL SEAL | 95X115X13/12mm | | ♦ | ♦ |
| | | | (013 997 5647) | | | | | | | |
| 62 | K21.03528 | 013 997 7247 | (014 997 1947) | 1 | ŞANZIMAN ARKA KEÇE | OIL SEAL | 95X115X13mm | | ♦ | ♦ |
| | | | (013 997 5547) | | | | | | | |
| 63 | | 945 262 0528 | (389 260 0150) | 1 | ŞANZIMAN KM DEVİR SACI | PULSE STAR | | | ♦ | ♦ |
| 64 | K21.03084 | 389 262 0445 | | 1 | ŞANZIMAN FLANŞI | COMPANION FLANGE | 4-H, Ø180mm | | ♦ | ♦ |
| 65 | K21.04310 | 014 997 5148 | (020 997 8648) | 1 | ŞANZIMAN FLANŞ ORİNGİ | O-RING | 72,4X5,3mm | | ♦ | ♦ |
| 66 | K21.06977 | 389 262 0362 | (945 262 0062) | 1 | ŞANZIMAN FLANŞI ALIN PULU | THRUST WASHER | 95X24mm | | ♦ | ♦ |
| 67 | K21.06028 | 945 990 0019 | (389 990 2019) | 1 | ŞANZIMAN FLANŞI ALIN VİDASI | SCREW | M24X2X85 | | ♦ | ♦ |
| | | | (389 990 0219) | | | | | | | |
| 68 | | 387 264 2921 | | 1 | DİREKSİYON POMPA DİŞLİSİ | GEAR | | (1) | ♦ | ♦ |
| 69 | | 387 264 3021 | | 1 | DİREKSİYON POMPA DİŞLİ KARŞILIĞI | GEAR | | (1) | ♦ | ♦ |
| 69 | | 387 264 4721 | | 1 | DİREKSİYON POMPA DİŞLİ KARŞILIĞI | GEAR | | (1) | ♦ | ♦ |
| 70 | K21.04083 | 387 262 0828 | (387 262 0428) | 1 | ŞANZIMAN KM DEVİR SACI | PULSE STAR | | (1) | ♦ | ♦ |
| 71 | | 389 264 0021 | (945 264 0121) | 1 | ŞANZIMAN KM DİŞLİSİ 64 DİŞ | GEAR 64 T. | | (1) | ♦ | ♦ |
| 72 | K21.06279 | 389 261 1120 | | 1 | ŞANZIMAN ARKA KAPAK | COVER | | (1) | ♦ | ♦ |

NOTES :
Alfabetic letters are used in conjunction with the encoded parts.

NOTLAR :
Alfabetik harfler ile kodlanan parçalar birlikte kullanılır.





Original parts names, oem numbers, symbols and descriptions used in this catalogue are for reference purposes only.

SYNCHRONIZER KIT CONST.

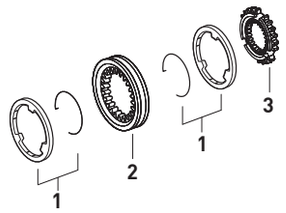


| Fig. | Kacmaz No. | Oem No | Oem Old No | Pcs. | Ürün Tanımı | Description |
|---|---|---|---|---|---|---|
| | K21.06190 | | | Kit | TAK.SENKROMENÇ KİT | SYNCHRONIZER KIT Const. |
| 1 | K21.03015 | 389 262 0637 | (387 262 0837) | 2 | TAKVİYE FRENLEME(Mo) | SYNCHRONIZING CONE / Mo |
| 2 | K21.03011 | 389 262 3023 | (389 262 2223) | 1 | TAKVİYE HALKA | ENGAGING SLEEVE |
| | | | (389 262 0623) | | | |
| 3 | K21.03012 | 389 262 5634 | (389 262 3934) | 1 | TAKVİYE SENKROMENÇ | ENGAGING RING |

SYNCHRONIZER KIT 3rd/4th

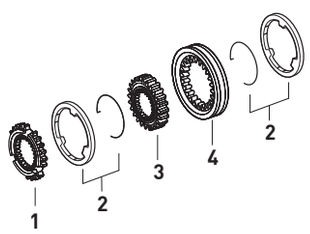


| Fig. | Kacmaz No. | Oem No | Oem Old No | Pcs. | Ürün Tanımı | Description |
|---|---|---|---|---|---|---|
| | K21.06191 | | | Kit | 3./4.VİTES SENK.KİT | SYNCH.KIT 3rd/4th |
| 1 | K21.03012 | 389 262 5634 | (389 262 3934) | 1 | 4.VİTES SENKROMENÇ | ENGAGING RING |
| 2 | K21.03015 | 389 262 0637 | (387 262 0837) | 2 | 3./4.VİT.FRENLEME(Mo) | SYNCHRONIZING CONE /Mo |
| 3 | K21.03399 | 389 262 0635 | | 1 | 3./4.VİTES YILDIZ DİŞLİ | SYNCHRONIZER HUB |
| 4 | K21.03011 | 389 262 3023 | (389 262 2223) | 1 | 3./4.VİTES HALKA | ENGAGING SLEEVE |
| | | | (389 262 0623) | | | |

SYNCHRONIZER KIT 1st/2nd

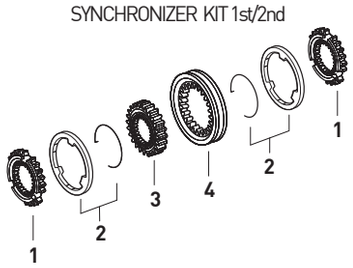


| Fig. | Kacmaz No. | Oem No | Oem Old No | Pcs. | Ürün Tanımı | Description |
|---|---|---|---|---|---|---|
| | K21.06192 | | | Kit | 1./2.VİTES SENK.KİT | SYNCH.KIT 1st/2nd |
| 1 | K21.03025 | 945 262 0434 | (389 262 0034) | 2 | 1./2.VİTES SENKROMENÇ | ENGAGING RING |
| 2 | K21.03016 | 389 262 0737 | (387 262 0937) | 2 | 1./2.VİT.FRENLEME(Mo) | SYNCHRONIZING CONE /Mo |
| 3 | K21.03056 | 389 262 0035 | | 1 | 1./2.VİTES YILDIZ DİŞLİ | SYNCHRONIZER HUB |
| 4 | K21.03010 | 389 262 2923 | (389 262 0723) | 1 | 1./2.VİTES HALKA | ENGAGING SLEEVE |

SYNCHRONIZER KIT PLANETARY

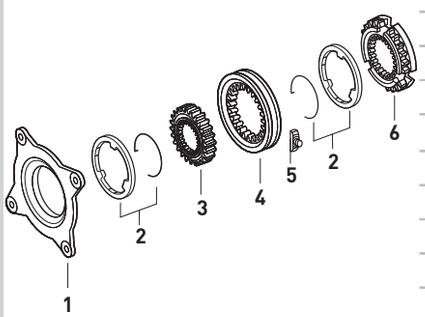


| Fig. | Kacmaz No. | Oem No | Oem Old No | Pcs. | Ürün Tanımı | Description |
|---|---|---|---|---|---|---|
| | K21.06193 | | | Kit | AĞIR SERİ SENK.KİT | SYNCH.KIT PLANETARY |
| 1 | K21.03018 | 389 260 2036 | | 1 | TABLA SENKROMENÇ | FOLLOWER RING |
| 2 | K21.03017 | 389 262 0537 | (389 262 0037) | 2 | AĞIR SERİ FRENLEME (Mo) | SYNCHRONIZING CONE / Mo |
| 3 | K21.03079 | 389 262 4935 | (389 262 2035) | 1 | AĞIR SERİ YILDIZ DİŞLİ | SYNCHRONIZER HUB |
| 4 | K21.03028 | 945 262 6623 | (945 262 0823) | 1 | AĞIR SERİ HALKA 73 DİŞ | ENGAGING SLEEVE 73 T. |
| | | | (389 262 1623) | | | |
| | | | (389 262 3823) | | | |
| 5 | K21.03406 | 389 265 2449 | (389 265 1249) | 2 | A.SERİ HİLAL PABUCU | SLIDING PAD |
| 6 | K21.03022 | 389 262 9134 | | 1 | SERİ SENKROMENÇ | ENGAGING RING |

SYNCHRONIZER KIT PLANETARY

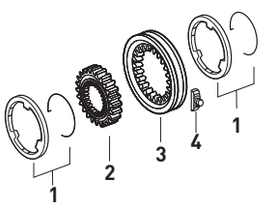


| Fig. | Kacmaz No. | Oem No | Oem Old No | Pcs. | Ürün Tanımı | Description |
|---|---|---|---|---|---|---|
| | K21.06194 | | | Kit | AĞIR SERİ SENK.KİT | SYNCH.KIT PLANETARY |
| 1 | K21.03017 | 389 262 0537 | (389 262 0037) | 2 | AĞIR SERİ FRENLEME (Mo) | SYNCHRONIZING CONE / Mo |
| 2 | K21.03079 | 389 262 4935 | (389 262 2035) | 1 | AĞIR SERİ YILDIZ DİŞLİ | SYNCHRONIZER HUB |
| 3 | K21.03028 | 945 262 6623 | (945 262 0823) | 1 | AĞIR SERİ HALKA 73 DİŞ | ENGAGING SLEEVE 73 T. |
| | | | (389 262 1623) | | | |
| | | | (389 262 3823) | | | |
| 4 | K21.03406 | 389 265 2449 | (389 265 1249) | 2 | A.SERİ HİLAL PABUCU | SLIDING PAD |

**Original parts names, oem numbers, symbols and descriptions used in this catalogue are for reference purposes only.**

| Fig. | Kacmaz No. | Oem No | Oem Old No | Pcs. | Ürün Tanımı | Description |
|---|---|---|---|---|---|---|
| | K21.06196 | | | Kit | AĞIR SERİ.SENK.KİT | SYNCH.KIT PLANETARY |
| 1 | K21.03017 | 389 262 0537 | (389 262 0037) | 2 | AĞIR SERİ FRENLEME (Mo) | SYNCHRONIZING CONE / Mo |
| 2 | K21.03081 | 389 262 0535 | | 1 | A.SERİ YILDIZ DİŞLİ 72 DİŞ | SYNCHRONIZER HUB 72 T. |
| 3 | K21.03420 | 389 262 1523 | (389 262 0123) | 1 | AĞIR SERİ HALKA 72 DİŞ | ENGAGING SLEEVE 72 T. |
| 4 | K21.03406 | 389 265 2449 | (389 265 1249) | 2 | A.SERİ HİLAL PABUCU | SLIDING PAD |

SYNCHRONIZER KIT PLANETARY

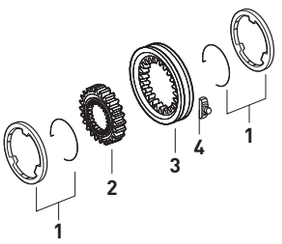


| Fig. | Kacmaz No. | Oem No | Oem Old No | Pcs. | Ürün Tanımı | Description |
|---|---|---|---|---|---|---|
| | K21.06195 | | | Kit | AĞIR SERİ SENK.KİT | SYNCH.KIT PLANETARY |
| 1 | K21.03018 | 389 260 2036 | | 1 | TABLA SENKROMENÇ | FOLLOWER RING |
| 2 | K21.03017 | 389 262 0537 | (389 262 0037) | 2 | AĞIR SERİ FRENLEME (Mo) | SYNCHRONIZING CONE / Mo |
| 3 | K21.03079 | 389 262 4935 | (389 262 2035) | 1 | A.SERİ YILDIZ DİŞLİ 73 DİŞ | SYNCHRONIZER HUB 73 T. |
| 4 | K21.03028 | 945 262 6623 | (945 262 0823) | 1 | AĞIR SERİ HALKA 73 DİŞ | ENGAGING SLEEVE 73 T. |
| | | | (389 262 1623) | | | |
| | | | (389 262 3823) | | | |
| 5 | K21.03406 | 389 265 2449 | (389 265 1249) | 2 | A.SERİ HİLAL PABUCU | SLIDING PAD |
| 6 | K21.03020 | 389 262 4034 | | 1 | SERİ SENKROMENÇ | ENGAGING RING |

SYNCHRONIZER KIT PLANETARY

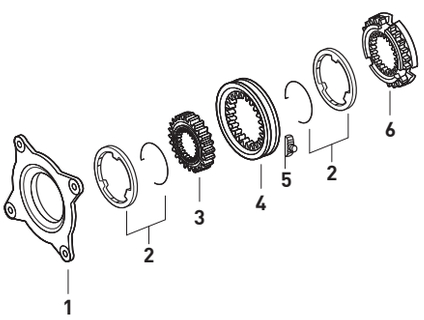


| Fig. | Kacmaz No. | Oem No | Oem Old No | Pcs. | Ürün Tanımı | Description |
|---|---|---|---|---|---|---|
| | K21.06197 | | | Kit | AĞIR SERİ.SENK.KİT | SYNCH.KIT PLANETARY |
| 1 | K21.03076 | 389 260 0936 | | 1 | TABLA SENKROMENÇ | FOLLOWER RING |
| 2 | K21.03017 | 389 262 0537 | (389 262 0037) | 2 | AĞIR SERİ FRENLEME (Mo) | SYNCHRONIZING CONE / Mo |
| 3 | K21.03081 | 389 262 0535 | | 1 | A.SERİ YILDIZ DİŞLİ 72 DİŞ | SYNCHRONIZER HUB 72 T. |
| 4 | K21.03420 | 389 262 1523 | (389 262 0123) | 1 | AĞIR SERİ HALKA 72 DİŞ | ENGAGING SLEEVE 72 T. |
| 5 | K21.03406 | 389 265 2449 | (389 265 1249) | 2 | A.SERİ HİLAL PABUCU | SLIDING PAD |
| 6 | K21.03082 | 389 262 2334 | (389 262 1934) | 1 | SERİ SENKROMENÇ | ENGAGING RING |

SYNCHRONIZER KIT PLANETARY

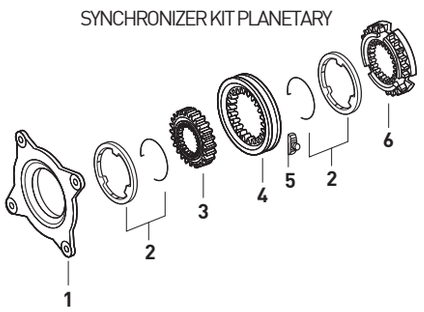


| Fig. | Kacmaz No. | Oem No | Oem Old No | Pcs. | Ürün Tanımı | Description |
|---|---|---|---|---|---|---|
| | K21.06436 | | | Kit | AĞIR SERİ.SENK.KİT | SYNCH.KIT PLANETARY |
| 1 | K21.03076 | 389 260 0936 | | 1 | TABLA SENKROMENÇ | FOLLOWER RING |
| 2 | K21.03017 | 389 262 0537 | (389 262 0037) | 2 | AĞIR SERİ FRENLEME (Mo) | SYNCHRONIZING CONE / Mo |
| 3 | K21.03420 | 389 262 1523 | (389 262 0123) | 1 | AĞIR SERİ HALKA 72 DİŞ | ENGAGING SLEEVE 72 T. |
| 4 | K21.03406 | 389 265 2449 | (389 265 1249) | 2 | A.SERİ HİLAL PABUCU | SLIDING PAD |
| 5 | K21.03082 | 389 262 2334 | (389 262 1934) | 1 | SERİ SENKROMENÇ | ENGAGING RING |

SYNCHRONIZER KIT PLANETARY

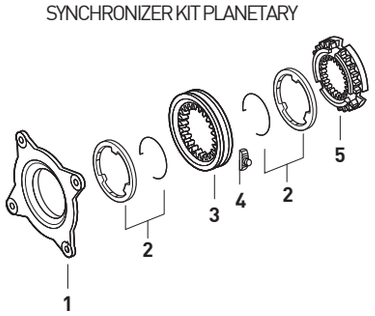




Original parts names, oem numbers, symbols and descriptions used in this catalogue are for reference purposes only.

# GEARBOX G 155 - 16 , G 180 - 16 / 11,9 - 14,0

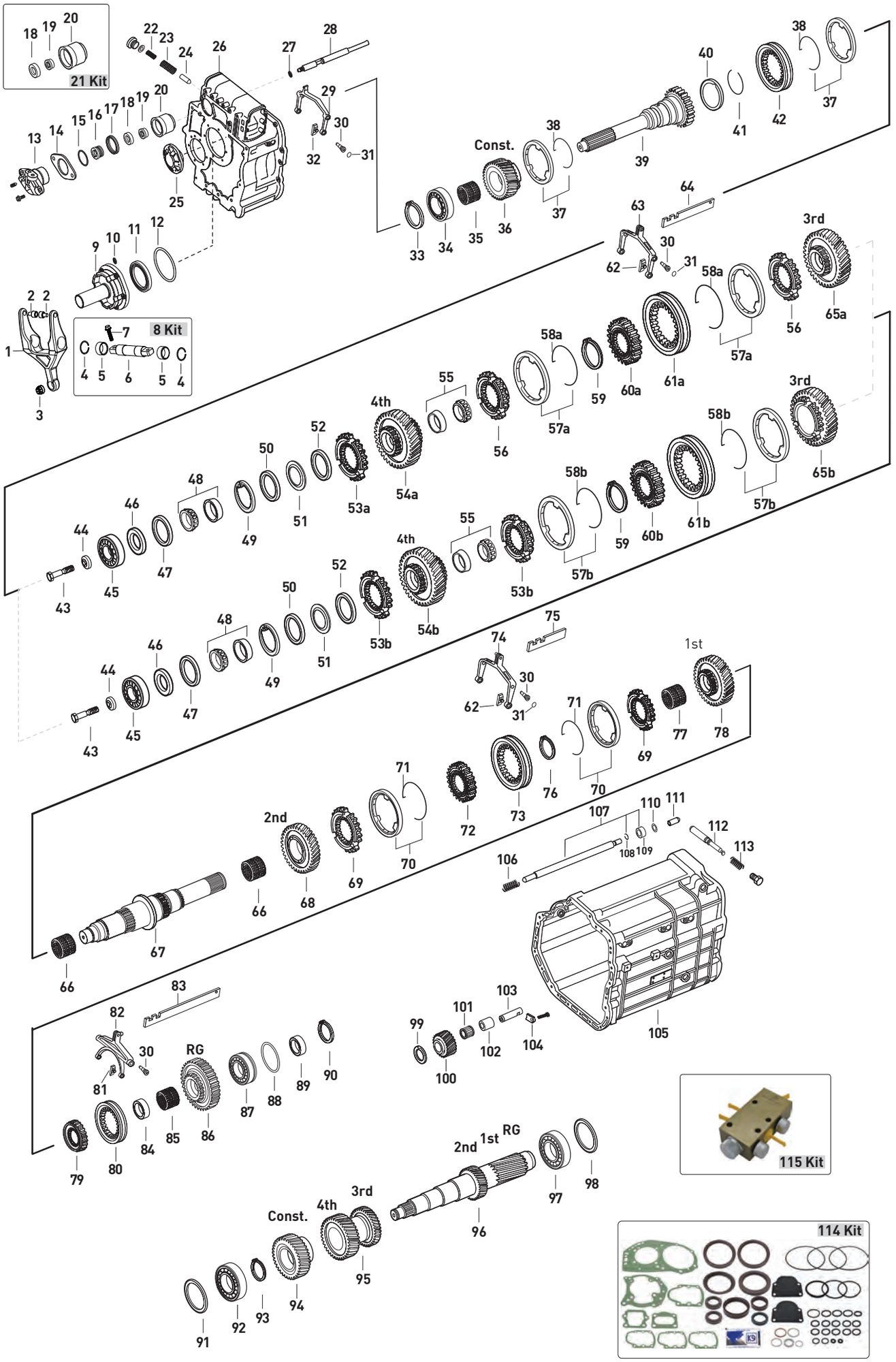




Original parts names, oem numbers, symbols and descriptions used in this catalogue are for reference purposes only.

| Fig. | Kacmaz No | Oem No | Oem Old No | Pcs. | Ürün Tanımı | Description | Sizes | Not | G155-16/11,9 | G155-16/14,0 | G180-16/11,9 | G180-16/14,0 |
|---|---|---|---|---|---|---|---|---|---|---|---|---|
| 1 | | 650 250 3813 | | 1 | DEBRİYAJ ÇATALI | RELEASE FORK | | | ♦ | ♦ | ♦ | ♦ |
| 2 | K21.07038 | 000 254 0017 | | 2 | DEBRİYAJ ÇATAL BURÇ VE PİMİ | CAM ROLLER | | | ♦ | ♦ | ♦ | ♦ |
| 3 | K21.07040 | 000 254 0335 | | 1 | DEBRİYAJ ÇATAL PLASTİK BURCU | PLASTIC BUSHING | | | ♦ | ♦ | ♦ | ♦ |
| 4 | | 912009 037200 | | 4 | DEBRİYAJ ÇATAL MİL SEKMANI | RETAINING RING | | | ♦ | ♦ | ♦ | ♦ |
| 5 | | 001 992 8401 | | 2 | DEBRİYAJ ÇATAL MİL BURCU | BUSHING | | | ♦ | ♦ | ♦ | ♦ |
| 6 | | 650 254 0006 | | 1 | DEBRİYAJ ÇATAL MİLİ | SHAFT | | | ♦ | ♦ | ♦ | ♦ |
| 7 | | 914112 010025 | | 2 | DEBRİYAJ ÇATAL MİL VİDASI | SCREW | M10X45 | | ♦ | ♦ | ♦ | ♦ |
| 8 | K21.04309 | | | Kit | DEBRİYAJ ÇATALI TAMİR TAKIMI | RELEASE FORK REPAIR KIT | | | ♦ | ♦ | ♦ | ♦ |
| 9 | K21.03403 | 389 261 3318 | (389 261 1018) | 1 | PRİZDİREK KEÇE KAPAĞI | COVER | | | ♦ | ♦ | ♦ | ♦ |
| 10 | K21.03520 | 015 997 2748 | (020 997 8448) | 1 | PRİZDİREK KEÇE KAPAK ORİNGİ | O-RING | 12X4,5mm | | ♦ | ♦ | ♦ | ♦ |
| 11 | K21.03521 | 015 997 1647 | (015 997 0647) | 1 | PRİZDİREK ÖN KEÇE | OIL SEAL | 52X68X8mm | | ♦ | ♦ | ♦ | ♦ |
| | | | (024 997 2147) | | | | | | | | | |
| 12 | K21.04162 | 389 262 4152 | (389 262 0955) | 1 | PRİZDİREK AYAR RAYNELİ | THRUST WASHER | 0,10mm | | ♦ | ♦ | ♦ | ♦ |
| 12 | K21.04243 | 389 262 0855 | | 1 | PRİZDİREK AYAR RAYNELİ | THRUST WASHER | 0,15mm | | ♦ | ♦ | ♦ | ♦ |
| 12 | K21.04151 | 389 262 0755 | | 1 | PRİZDİREK AYAR RAYNELİ | THRUST WASHER | 0,20mm | | ♦ | ♦ | ♦ | ♦ |
| 12 | K21.06715 | 389 262 3055 | | 1 | PRİZDİREK AYAR RAYNELİ | THRUST WASHER | 0,25mm | | ♦ | ♦ | ♦ | ♦ |
| 12 | K21.04221 | 389 262 3255 | | 1 | PRİZDİREK AYAR RAYNELİ | THRUST WASHER | 0,31mm | | ♦ | ♦ | ♦ | ♦ |
| 12 | K21.04163 | 389 262 3555 | (389 262 0655) | 1 | PRİZDİREK AYAR RAYNELİ | THRUST WASHER | 0,40mm | | ♦ | ♦ | ♦ | ♦ |
| | | | (389 262 4452) | | | | | | | | | |
| 12 | K21.04164 | 389 262 3755 | (389 262 1954) | 1 | PRİZDİREK AYAR RAYNELİ | THRUST WASHER | 0,46mm | | ♦ | ♦ | ♦ | ♦ |
| 12 | K21.04246 | 389 262 3855 | | 1 | PRİZDİREK AYAR RAYNELİ | THRUST WASHER | 0,49mm | | ♦ | ♦ | ♦ | ♦ |
| 12 | K21.04250 | 389 262 4055 | (389 262 0155) | 1 | PRİZDİREK AYAR RAYNELİ | THRUST WASHER | 0,55mm | | ♦ | ♦ | ♦ | ♦ |
| | | | (389 262 2154) | | | | | | | | | |
| 12 | K21.04167 | 389 262 4255 | (389 262 2254) | 1 | PRİZDİREK AYAR RAYNELİ | THRUST WASHER | 0,61mm | | ♦ | ♦ | ♦ | ♦ |
| 12 | K21.04168 | 389 262 4355 | (389 262 2354) | 1 | PRİZDİREK AYAR RAYNELİ | THRUST WASHER | 0,64mm | | ♦ | ♦ | ♦ | ♦ |
| 12 | K21.04169 | 389 262 4555 | (389 262 2454) | 1 | PRİZDİREK AYAR RAYNELİ | THRUST WASHER | 0,70mm | | ♦ | ♦ | ♦ | ♦ |
| 12 | K21.04170 | 389 262 4755 | (389 262 2554) | 1 | PRİZDİREK AYAR RAYNELİ | THRUST WASHER | 0,76mm | | ♦ | ♦ | ♦ | ♦ |
| 12 | K21.04281 | 389 262 4855 | (389 262 0555) | 1 | PRİZDİREK AYAR RAYNELİ | THRUST WASHER | 0,79mm | | ♦ | ♦ | ♦ | ♦ |
| 12 | K21.04282 | 389 262 5555 | | 1 | PRİZDİREK AYAR RAYNELİ | THRUST WASHER | 1,00mm | | ♦ | ♦ | ♦ | ♦ |
| 12 | K21.04171 | 389 262 9654 | (389 262 2654) | 1 | PRİZDİREK AYAR RAYNELİ | THRUST WASHER | 2,00mm | | ♦ | ♦ | ♦ | ♦ |
| 13 | K21.06236 | 389 267 2819 | (389 267 2719) | 1 | TAKVİYE SİLİNDİR GÖVDE KAPAĞI | COVER | | | ♦ | ♦ | ♦ | ♦ |
| | | | (389 267 2419) | | | | | | | | | |
| | | | (389 267 2319) | | | | | | | | | |
| | | | (389 267 1519) | | | | | | | | | |
| 14 | K21.04158 | 387 263 3352 | | 1 | TAKVİYE SİLİNDİR PULU | SPACER WASHER | 0,20mm | | ♦ | ♦ | ♦ | ♦ |
| 14 | K21.04159 | 387 263 3452 | | 1 | TAKVİYE SİLİNDİR PULU | SPACER WASHER | 0,40mm | | ♦ | ♦ | ♦ | ♦ |
| 14 | K21.04179 | 387 263 3552 | | 1 | TAKVİYE SİLİNDİR PULU | SPACER WASHER | 0,60mm | | ♦ | ♦ | ♦ | ♦ |
| 14 | K21.04181 | 387 263 3652 | | 1 | TAKVİYE SİLİNDİR PULU | SPACER WASHER | 0,80mm | | ♦ | ♦ | ♦ | ♦ |
| 14 | K21.04180 | 387 263 3752 | | 1 | TAKVİYE SİLİNDİR PULU | SPACER WASHER | 1,00mm | | ♦ | ♦ | ♦ | ♦ |
| 14 | K21.04251 | 387 263 3852 | | 1 | TAKVİYE SİLİNDİR PULU | SPACER WASHER | 2,00mm | | ♦ | ♦ | ♦ | ♦ |
| 15 | K21.06398 | 007 997 4248 | | 1 | TAKVİYE SİLİNDİR ORİNGİ | O-RING | 63X3mm | | ♦ | ♦ | ♦ | ♦ |
| 16 | K21.06994 | 945 267 0218 | (387 267 0918) | 1 | TAKVİYE MİL PİSTONU | PISTON | | | ♦ | ♦ | ♦ | ♦ |
| | | | (387 267 0618) | | | | | | | | | |
| 17 | K21.03524 | 006 997 6447 | (020 997 6647) | 1 | TAKVİYE HAVA KEÇESİ | OIL SEAL | 41X48X11,5mm | | ♦ | ♦ | ♦ | ♦ |
| | | | (012 997 3347) | | | | | | | | | |
| 18 | K21.04178 | 387 267 0650 | (387 267 0250) | 1 | TAKVİYE HİLAL MİL BURCU | BUSHING | 34X22X8mm | | ♦ | ♦ | ♦ | ♦ |
| 19 | K21.03523 | 000 267 0197 | (000 267 0397) | 1 | TAKVİYE HİLAL MİL KEÇESİ | OIL SEAL | 22X32X8mm | | ♦ | ♦ | ♦ | ♦ |
| 20 | K21.06013 | 389 267 3319 | (389 267 0419) | 1 | TAKVİYE SİLİNDİR GÖVDESİ (BOŞ) | CYLINDER (EMPTY) | | | ♦ | ♦ | ♦ | ♦ |
| | | | (389 267 2119) | | | | | | | | | |
| | | | (389 267 2219) | | | | | | | | | |
| 21 | K21.06500 | | | Kit | TAKVİYE SİLİNDİR GÖVDESİ (DOLU) | CYLINDER (FULL) | | | ♦ | ♦ | ♦ | ♦ |
| 22 | K21.06015 | 387 993 4501 | | 1 | ŞANZ.TAKVİYE KİLİT FİŞEK YAYI | SPRING | 6,2X63mm | | ♦ | ♦ | ♦ | ♦ |
| 23 | K21.03500 | 387 993 4401 | (387 993 2501) | 1 | KİLİT YAYI | SPRING | 9,8X63,3mm | | ♦ | ♦ | ♦ | ♦ |
| 24 | K21.03492 | 389 267 1174 | (387 267 0074) | 1 | KİLİT FİŞEĞİ | PIN | | | ♦ | ♦ | ♦ | ♦ |
| 25 | | 389 261 1933 | (389 261 0633) | 1 | GRUP MİLİ ÖN BİLYA KAPAĞI | COVER | | | ♦ | ♦ | ♦ | ♦ |

NOTES :
Parts encoded alphabetic and numaric are used together.

NOTLAR :
Alfabetik ve rakam ile kodlanan parçalar birlikte kullanılır.





Original parts names, oem numbers, symbols and descriptions used in this catalogue are for reference purposes only.

# GEARBOX G 155 - 16 , G 180 - 16 / 11,9 - 14,0

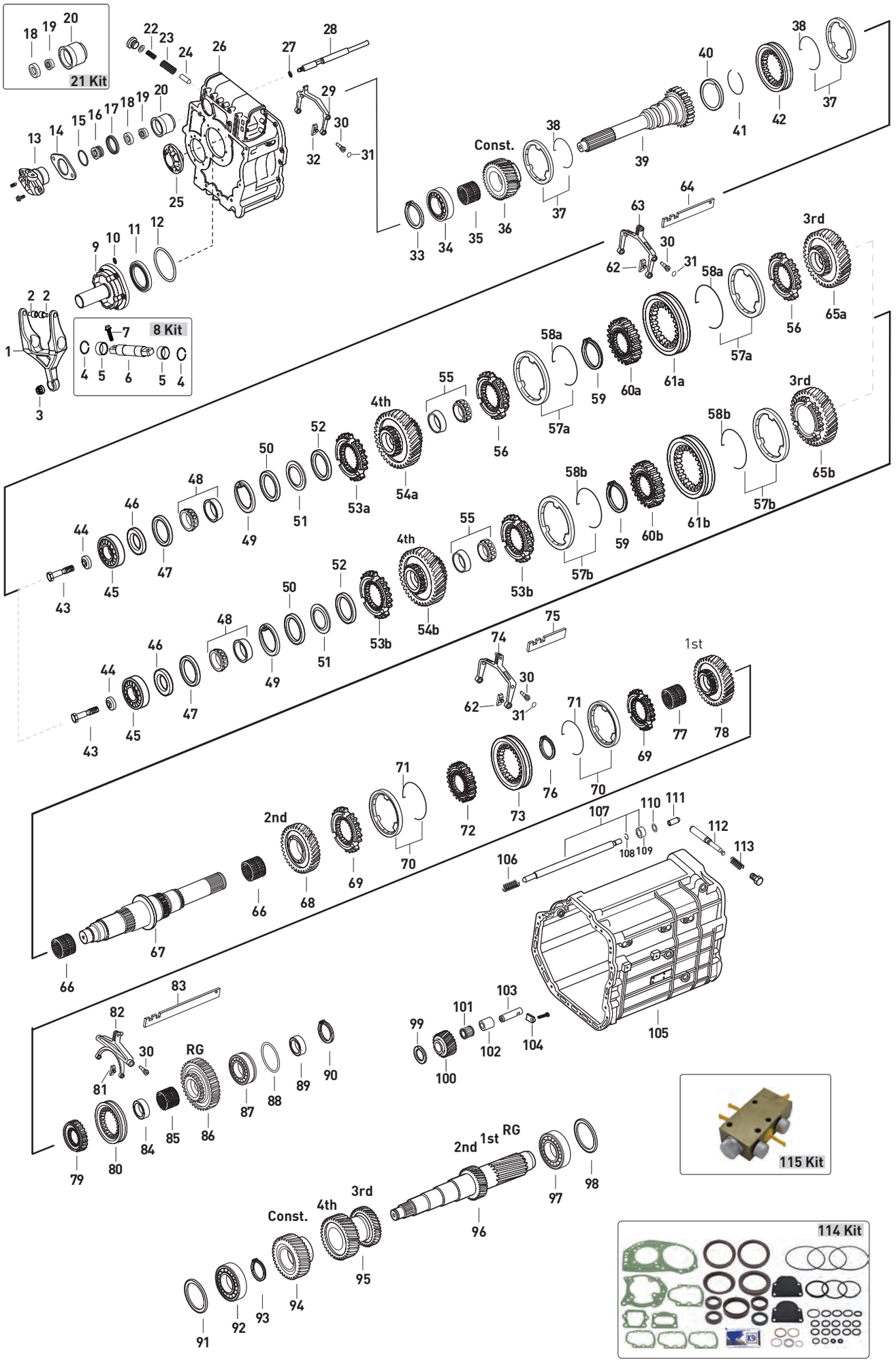




Original parts names, oem numbers, symbols and descriptions used in this catalogue are for reference purposes only.

| Fig. | Kacmaz No | Oem No | Oem Old No | Pcs. | Ürün Tanımı | Description | Sizes | Not | G155-16/11,9 | G155-16/14,0 | G180-16/11,9 | G180-16/14,0 |
|---|---|---|---|---|---|---|---|---|---|---|---|---|
| 26 | | 389 261 9602 | (389 261 0308) | 1 | ŞANZIMAN ÖN GÖVDE | HOUSING | | | ♦ | ♦ | ♦ | ♦ |
| 26 | | 389 261 0008 | | 1 | ŞANZIMAN ÖN GÖVDE | HOUSING | | | ♦ | ♦ | ♦ | ♦ |
| 27 | K21.04160 | 387 263 2652 | | 1 | TAKVİYE HİLAL MİL PULU | SPACER WASHER | 0,20mm | | ♦ | ♦ | ♦ | ♦ |
| 27 | K21.04161 | 387 263 2752 | | 1 | TAKVİYE HİLAL MİL PULU | SPACER WASHER | 0,40mm | | ♦ | ♦ | ♦ | ♦ |
| 27 | | 387 263 2852 | | 1 | TAKVİYE HİLAL MİL PULU | SPACER WASHER | 0,60mm | | ♦ | ♦ | ♦ | ♦ |
| 27 | | 387 263 3052 | | 1 | TAKVİYE HİLAL MİL PULU | SPACER WASHER | 1,00mm | | ♦ | ♦ | ♦ | ♦ |
| 28 | | 389 267 3017 | | 1 | TAKVİYE HİLAL MİLİ | G.SHIFT RAIL | | | ♦ | | ♦ | |
| 28 | | 389 267 2017 | | 1 | TAKVİYE HİLAL MİLİ | G.SHIFT RAIL | | | | ♦ | | ♦ |
| 28 | | 389 267 2917 | | 1 | TAKVİYE HİLAL MİLİ | G.SHIFT RAIL | | | ♦ | | ♦ | |
| 28 | | 389 267 1917 | | 1 | TAKVİYE HİLAL MİLİ | G.SHIFT RAIL | | | | ♦ | | ♦ |
| 28 | | 389 267 2117 | | 1 | TAKVİYE HİLAL MİLİ | G.SHIFT RAIL | | | ♦ | ♦ | ♦ | ♦ |
| 28 | | 389 267 2217 | | 1 | TAKVİYE HİLAL MİLİ | G.SHIFT RAIL | | | ♦ | ♦ | ♦ | ♦ |
| 29 | K21.06406 | 389 265 0601 | | 1 | TAKVİYE HİLALİ | GEAR SHIFT FORK | | | ♦ | ♦ | ♦ | ♦ |
| 30 | | 389 265 1674 | | 8 | HİLAL VİDASI | SCREW | | | ♦ | ♦ | ♦ | ♦ |
| 31 | K21.04210 | 013 997 0148 | (020 997 8348) | 8 | HİLAL VİDA ORİNGİ | O-RING | 13,3X2,4mm | | ♦ | ♦ | ♦ | ♦ |
| 32 | K21.03406 | 389 265 2449 | (945 265 0349) | 2 | TAKVİYE HİLAL PABUCU | SLIDING PAD | | | ♦ | ♦ | ♦ | ♦ |
| | | | (387 265 0049) | | | | | | | | | |
| | | | (389 265 0949) | | | | | | | | | |
| | | | (389 265 1249) | | | | | | | | | |
| 33 | K21.04347 | 387 262 8673 | | 1 | PRİZDİREK ÖN BİLYA SEKMANI | RETAINING RING | 3,15mm | | ♦ | ♦ | ♦ | ♦ |
| 33 | K21.04346 | 387 262 8773 | | 1 | PRİZDİREK ÖN BİLYA SEKMANI | RETAINING RING | 3,20mm | | ♦ | ♦ | ♦ | ♦ |
| 33 | K21.07015 | 387 262 8873 | | 1 | PRİZDİREK ÖN BİLYA SEKMANI | RETAINING RING | 3,25mm | | ♦ | ♦ | ♦ | ♦ |
| 33 | K21.04348 | 387 262 8973 | | 1 | PRİZDİREK ÖN BİLYA SEKMANI | RETAINING RING | 3,30mm | | ♦ | ♦ | ♦ | ♦ |
| 33 | K21.07016 | 387 262 9073 | | 1 | PRİZDİREK ÖN BİLYA SEKMANI | RETAINING RING | 3,35mm | | ♦ | ♦ | ♦ | ♦ |
| 33 | K21.04349 | 387 262 9173 | | 1 | PRİZDİREK ÖN BİLYA SEKMANI | RETAINING RING | 3,40mm | | ♦ | ♦ | ♦ | ♦ |
| 33 | K21.07017 | 387 262 9273 | | 1 | PRİZDİREK ÖN BİLYA SEKMANI | RETAINING RING | 3,45mm | | ♦ | ♦ | ♦ | ♦ |
| 33 | K21.04350 | 387 262 9373 | | 1 | PRİZDİREK ÖN BİLYA SEKMANI | RETAINING RING | 3,50mm | | ♦ | ♦ | ♦ | ♦ |
| 33 | | 387 262 6873 | | 1 | PRİZDİREK ÖN BİLYA SEKMANI | RETAINING RING | 3,65mm | | ♦ | ♦ | ♦ | ♦ |
| 33 | | 387 262 6973 | | 1 | PRİZDİREK ÖN BİLYA SEKMANI | RETAINING RING | 3,70mm | | ♦ | ♦ | ♦ | ♦ |
| 33 | | 387 262 7073 | | 1 | PRİZDİREK ÖN BİLYA SEKMANI | RETAINING RING | 3,75mm | | ♦ | ♦ | ♦ | ♦ |
| 33 | | 387 262 7173 | | 1 | PRİZDİREK ÖN BİLYA SEKMANI | RETAINING RING | 3,80mm | | ♦ | ♦ | ♦ | ♦ |
| 33 | | 387 262 7273 | | 1 | PRİZDİREK ÖN BİLYA SEKMANI | RETAINING RING | 3,85mm | | ♦ | ♦ | ♦ | ♦ |
| 33 | | 387 262 7373 | | 1 | PRİZDİREK ÖN BİLYA SEKMANI | RETAINING RING | 3,90mm | | ♦ | ♦ | ♦ | ♦ |
| 33 | | 387 262 7473 | | 1 | PRİZDİREK ÖN BİLYA SEKMANI | RETAINING RING | 3,95mm | | ♦ | ♦ | ♦ | ♦ |
| 33 | | 387 262 7573 | | 1 | PRİZDİREK ÖN BİLYA SEKMANI | RETAINING RING | 4,00mm | | ♦ | ♦ | ♦ | ♦ |
| 34 | K21.03618 | 011 981 1305 | (014 981 9005) | 1 | PRİZDİREK ÖN BİLYA | ROLLER BEARING | 75X140X34,25mm | | ♦ | ♦ | ♦ | ♦ |
| | | | (008 981 8605) | | | | | | | | | |
| | | | (008 981 2605) | | | | | | | | | |
| 35 | K21.03819 | 009 981 1610 | (008 981 9410) | 1 | TAKVİYE MASURA BİLYA | NEEDLE CAGE | 85X93X37mm | | ♦ | ♦ | ♦ | ♦ |
| | | | (019 981 0810) | | | | | | | | | |
| 36 | K21.03091 | 389 262 7710 | (389 262 2710) | 1 | TAKVİYE DİŞLİSİ 26 DİŞ | CONSTANT GEAR 26 T. | | (1) | ♦ | | ♦ | |
| 36 | K21.03093 | 389 262 2210 | | 1 | TAKVİYE DİŞLİSİ 22 DİŞ | CONSTANT GEAR 22 T. | | (1) | | ♦ | | ♦ |
| 36 | K21.03092 | 389 262 2910 | (389 262 1010) | 1 | TAKVİYE DİŞLİSİ 26 DİŞ | CONSTANT GEAR 26 T. | | (2) | ♦ | | ♦ | |
| 36 | K21.03094 | 389 262 2810 | (389 262 3010) | 1 | TAKVİYE DİŞLİSİ 22 DİŞ | CONSTANT GEAR 22 T. | | (2) | | ♦ | | ♦ |
| | | | (389 262 0910) | | | | | | | | | |
| 37 | K21.03015 | 389 262 0637 | (387 262 0837) | 2 | TAKVİYE FRENLEME (Mo) | SYNCHRONIZING CONE / Mo | | | ♦ | ♦ | ♦ | ♦ |
| | | | (389 262 1037) | | | | | | | | | |
| 37 | K21.06286 | 389 262 3137 | | 2 | TAKVİYE FRENLEME (Mo) | SYNCHRONIZING CONE / Mo | | vertical striped | ♦ | ♦ | ♦ | ♦ |
| 38 | K21.03044 | 387 262 1093 | (387 262 0693) | 2 | FRENLEME TELİ | SPRING | | | ♦ | ♦ | ♦ | ♦ |
| | | | (960 262 1393) | | | | | | | | | |
| 39 | K21.03046 | 389 262 2901 | | 1 | PRİZDİREK 60 DİŞ | INPUT SHAFT 60 T. | | (1) | ♦ | ♦ | ♦ | ♦ |
| 39 | K21.03095 | 389 262 3701 | (389 262 1201) | 1 | PRİZDİREK 60 DİŞ | INPUT SHAFT 60 T. | | (2) | ♦ | ♦ | ♦ | ♦ |
| 39 | K21.03497 | 389 262 5201 | | 1 | PRİZDİREK 60 DİŞ | INPUT SHAFT 60 T. | | (PTO) | ♦ | ♦ | ♦ | ♦ |
| 40 | K21.03522 | 018 997 7147 | (018 997 7547) | 1 | PRİZDİREK ARKA KEÇE | OIL SEAL | 80X104X10mm | | ♦ | ♦ | ♦ | ♦ |
| 41 | K21.04146 | 389 262 0973 | (945 262 0073) | 1 | PRİZDİREK KEÇE SEKMANI | LOCK RING | | | ♦ | ♦ | ♦ | ♦ |

NOTES :
Parts encoded alphabetic and numaric are used together.

NOTLAR :
Alfabetik ve rakam ile kodlanan parçalar birlikte kullanılır.





Original parts names, oem numbers, symbols and descriptions used in this catalogue are for reference purposes only.

# GEARBOX G 155 - 16 , G 180 - 16 / 11,9 - 14,0

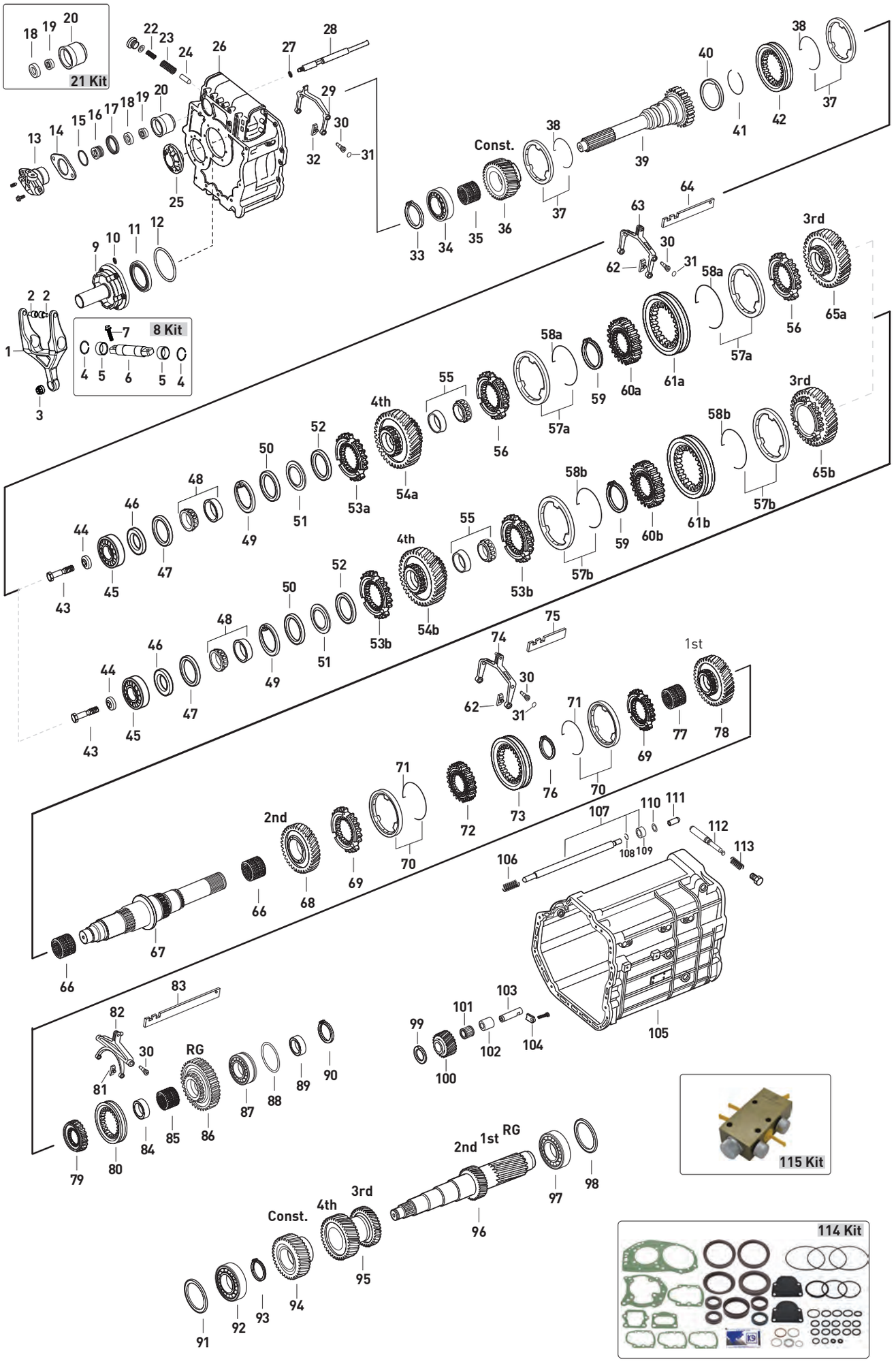




Original parts names, oem numbers, symbols and descriptions used in this catalogue are for reference purposes only.

| Fig. | Kacmaz No | Oem No | Oem Old No | Pcs. | Ürün Tanımı | Description | Sizes | Not | G155-16/11,9 | G155-16/14,0 | G180-16/11,9 | G180-16/14,0 |
|---|---|---|---|---|---|---|---|---|---|---|---|---|
| 42 | K21.03011 | 389 262 3023 | (389 262 2223) | 1 | TAKVİYE HALKA | ENGAGING SLEVEE | | | ♦ | ♦ | ♦ | ♦ |
| 42 | K21.03421 | 387 262 1523 | (387 262 0523) | 1 | TAKVİYE HALKA | ENGAGING SLEVEE | | | ♦ | ♦ | ♦ | ♦ |
| 43 | K21.03407 | 389 990 1819 | | 1 | KAMALI MİL UÇ VİDA (Sol Diş) | SCREW (Bools-L-teeth) | | (3) | ♦ | ♦ | ♦ | ♦ |
| 43 | K21.03422 | 389 990 0119 | | 1 | KAMALI MİL UÇ VİDA (Sağ Diş) | SCREW (Bools-R-teeth) | | | ♦ | ♦ | ♦ | ♦ |
| 44 | K21.04126 | 389 262 0062 | | 1 | KAMALI MİL UÇ VİDA PULU | WASHER | | | ♦ | ♦ | ♦ | ♦ |
| 45 | K21.03643 | 008 981 2805 | (008 981 4005) | 1 | KAMALI MİL UÇ BİLYA | ROLLER BEARING | 40X91X32mm | | ♦ | ♦ | ♦ | ♦ |
| 46 | K21.04127 | 389 262 6454 | | 1 | KAMALI MİL UÇ BİLYA ALT PULU | THRUST WASHER | 2,50mm | | ♦ | ♦ | ♦ | ♦ |
| 46 | K21.04120 | 389 262 5552 | | 1 | KAMALI MİL UÇ BİLYA ALT PULU | THRUST WASHER | 1,20mm | | ♦ | ♦ | ♦ | ♦ |
| 46 | K21.04149 | | | 1 | KAMALI MİL UÇ BİLYA ALT PULU | THRUST WASHER | 1,10mm | | ♦ | ♦ | ♦ | ♦ |
| 46 | K21.04148 | | | 1 | KAMALI MİL UÇ BİLYA ALT PULU | THRUST WASHER | 1,00mm | | ♦ | ♦ | ♦ | ♦ |
| 46 | K21.04147 | | | 1 | KAMALI MİL UÇ BİLYA ALT PULU | THRUST WASHER | 0,90mm | | ♦ | ♦ | ♦ | ♦ |
| 46 | K21.04121 | 389 262 5652 | | 1 | KAMALI MİL UÇ BİLYA ALT PULU | THRUST WASHER | 0,80mm | | ♦ | ♦ | ♦ | ♦ |
| 46 | K21.04128 | 389 262 2954 | | 1 | KAMALI MİL UÇ BİLYA ALT PULU | THRUST WASHER | 0,70mm | | ♦ | ♦ | ♦ | ♦ |
| 46 | K21.04129 | 389 262 3054 | | 1 | KAMALI MİL UÇ BİLYA ALT PULU | THRUST WASHER | 0,60mm | | ♦ | ♦ | ♦ | ♦ |
| 46 | K21.04122 | 389 262 5752 | | 1 | KAMALI MİL UÇ BİLYA ALT PULU | THRUST WASHER | 0,50mm | | ♦ | ♦ | ♦ | ♦ |
| 46 | K21.04130 | 389 262 7954 | | 1 | KAMALI MİL UÇ BİLYA ALT PULU | THRUST WASHER | 0,30mm | | ♦ | ♦ | ♦ | ♦ |
| 46 | K21.04123 | 389 262 5852 | | 1 | KAMALI MİL UÇ BİLYA ALT PULU | THRUST WASHER | 0,20mm | | ♦ | ♦ | ♦ | ♦ |
| 46 | K21.04124 | 389 262 5952 | | 1 | KAMALI MİL UÇ BİLYA ALT PULU | THRUST WASHER | 0,10mm | | ♦ | ♦ | ♦ | ♦ |
| 47 | K21.04024 | 389 262 3352 | | 1 | 4.VİTES ÖN BİLYA AYAR PULU | THRUST WASHER | 2,50mm | | ♦ | ♦ | ♦ | ♦ |
| 47 | K21.04025 | 389 262 3252 | | 1 | 4.VİTES ÖN BİLYA AYAR PULU | THRUST WASHER | 2,00mm | | ♦ | ♦ | ♦ | ♦ |
| 47 | K21.04026 | 389 262 3152 | | 1 | 4.VİTES ÖN BİLYA AYAR PULU | THRUST WASHER | 1,95mm | | ♦ | ♦ | ♦ | ♦ |
| 47 | K21.04027 | 389 262 3052 | | 1 | 4.VİTES ÖN BİLYA AYAR PULU | THRUST WASHER | 1,90mm | | ♦ | ♦ | ♦ | ♦ |
| 47 | K21.04028 | 389 262 2952 | | 1 | 4.VİTES ÖN BİLYA AYAR PULU | THRUST WASHER | 1,85mm | | ♦ | ♦ | ♦ | ♦ |
| 47 | K21.04092 | 389 262 2455 | | 1 | 4.VİTES ÖN BİLYA AYAR PULU | THRUST WASHER | 1,82mm | | ♦ | ♦ | ♦ | ♦ |
| 47 | K21.04093 | 389 262 2355 | | 1 | 4.VİTES ÖN BİLYA AYAR PULU | THRUST WASHER | 1,79mm | | ♦ | ♦ | ♦ | ♦ |
| 47 | K21.04094 | 389 262 2255 | | 1 | 4.VİTES ÖN BİLYA AYAR PULU | THRUST WASHER | 1,76mm | | ♦ | ♦ | ♦ | ♦ |
| 47 | K21.04095 | 389 262 2155 | | 1 | 4.VİTES ÖN BİLYA AYAR PULU | THRUST WASHER | 1,73mm | | ♦ | ♦ | ♦ | ♦ |
| 47 | K21.04096 | 389 262 2055 | | 1 | 4.VİTES ÖN BİLYA AYAR PULU | THRUST WASHER | 1,67mm | | ♦ | ♦ | ♦ | ♦ |
| 47 | K21.04097 | 389 262 1955 | | 1 | 4.VİTES ÖN BİLYA AYAR PULU | THRUST WASHER | 1,64mm | | ♦ | ♦ | ♦ | ♦ |
| 47 | K21.04098 | 389 262 1855 | | 1 | 4.VİTES ÖN BİLYA AYAR PULU | THRUST WASHER | 1,61mm | | ♦ | ♦ | ♦ | ♦ |
| 47 | K21.04099 | 389 262 1755 | | 1 | 4.VİTES ÖN BİLYA AYAR PULU | THRUST WASHER | 1,58mm | | ♦ | ♦ | ♦ | ♦ |
| 47 | K21.04100 | 389 262 2352 | | 1 | 4.VİTES ÖN BİLYA AYAR PULU | THRUST WASHER | 1,55mm | | ♦ | ♦ | ♦ | ♦ |
| 47 | K21.04101 | 389 262 1655 | | 1 | 4.VİTES ÖN BİLYA AYAR PULU | THRUST WASHER | 1,52mm | | ♦ | ♦ | ♦ | ♦ |
| 47 | K21.04102 | 389 262 1555 | | 1 | 4.VİTES ÖN BİLYA AYAR PULU | THRUST WASHER | 1,49mm | | ♦ | ♦ | ♦ | ♦ |
| 47 | K21.04103 | 389 262 1455 | | 1 | 4.VİTES ÖN BİLYA AYAR PULU | THRUST WASHER | 1,46mm | | ♦ | ♦ | ♦ | ♦ |
| 47 | K21.04104 | 389 262 1355 | | 1 | 4.VİTES ÖN BİLYA AYAR PULU | THRUST WASHER | 1,43mm | | ♦ | ♦ | ♦ | ♦ |
| 47 | K21.04105 | 389 262 2052 | | 1 | 4.VİTES ÖN BİLYA AYAR PULU | THRUST WASHER | 1,40mm | | ♦ | ♦ | ♦ | ♦ |
| 47 | K21.04106 | 389 262 1952 | | 1 | 4.VİTES ÖN BİLYA AYAR PULU | THRUST WASHER | 1,35mm | | ♦ | ♦ | ♦ | ♦ |
| 47 | K21.04107 | 389 262 2754 | | 1 | 4.VİTES ÖN BİLYA AYAR PULU | THRUST WASHER | 1,30mm | | ♦ | ♦ | ♦ | ♦ |
| 47 | K21.04108 | 389 262 3654 | | 1 | 4.VİTES ÖN BİLYA AYAR PULU | THRUST WASHER | 1,25mm | | ♦ | ♦ | ♦ | ♦ |
| 47 | K21.04109 | 389 262 3554 | | 1 | 4.VİTES ÖN BİLYA AYAR PULU | THRUST WASHER | 1,20mm | | ♦ | ♦ | ♦ | ♦ |
| 47 | K21.04110 | 389 262 3454 | | 1 | 4.VİTES ÖN BİLYA AYAR PULU | THRUST WASHER | 1,15mm | | ♦ | ♦ | ♦ | ♦ |
| 47 | K21.04111 | 389 262 3354 | | 1 | 4.VİTES ÖN BİLYA AYAR PULU | THRUST WASHER | 1,10mm | | ♦ | ♦ | ♦ | ♦ |
| 47 | K21.04112 | 389 262 3254 | | 1 | 4.VİTES ÖN BİLYA AYAR PULU | THRUST WASHER | 1,05mm | | ♦ | ♦ | ♦ | ♦ |
| 47 | K21.04113 | 389 262 2854 | | 1 | 4.VİTES ÖN BİLYA AYAR PULU | THRUST WASHER | 0,50mm | | ♦ | ♦ | ♦ | ♦ |
| 47 | K21.94113 | | | 1 | 4.VİTES ÖN BİLYA AYAR PULU | THRUST WASHER | 0,40mm | | ♦ | ♦ | ♦ | ♦ |
| 47 | K21.84113 | | | 1 | 4.VİTES ÖN BİLYA AYAR PULU | THRUST WASHER | 0,30mm | | ♦ | ♦ | ♦ | ♦ |
| 47 | K21.74113 | | | 1 | 4.VİTES ÖN BİLYA AYAR PULU | THRUST WASHER | 0,20mm | | ♦ | ♦ | ♦ | ♦ |
| 47 | K21.64113 | | | 1 | 4.VİTES ÖN BİLYA AYAR PULU | THRUST WASHER | 0,10mm | | ♦ | ♦ | ♦ | ♦ |
| 48 | K21.03633 | 002 981 7905 | (003 981 8305) | 1 | 4.VİTES DİŞLİ ÖN BİLYA | ROLLER BEARING | 50X90X32mm | | ♦ | ♦ | ♦ | ♦ |
| | | | (004 981 4205) | | | | | | | | | |
| | | | (011 981 7605) | | | | | | | | | |
| 49 | K21.04339 | 387 268 0773 | | 1 | 4.VİTES DİŞLİ SEKMANI | RETAINING RING | 3,05mm | | ♦ | ♦ | ♦ | ♦ |
| 49 | | 387 268 0873 | | 1 | 4.VİTES DİŞLİ SEKMANI | RETAINING RING | 3,08mm | | ♦ | ♦ | ♦ | ♦ |
| 49 | | 387 268 0973 | | 1 | 4.VİTES DİŞLİ SEKMANI | RETAINING RING | 3,11mm | | ♦ | ♦ | ♦ | ♦ |

NOTES :
Parts encoded alphabetic and numaric are used together.

NOTLAR :
Alfabetik ve rakam ile kodlanan parçalar birlikte kullanılır.





Original parts names, oem numbers, symbols and descriptions used in this catalogue are for reference purposes only.

# GEARBOX G 155 - 16 , G 180 - 16 / 11,9 - 14,0

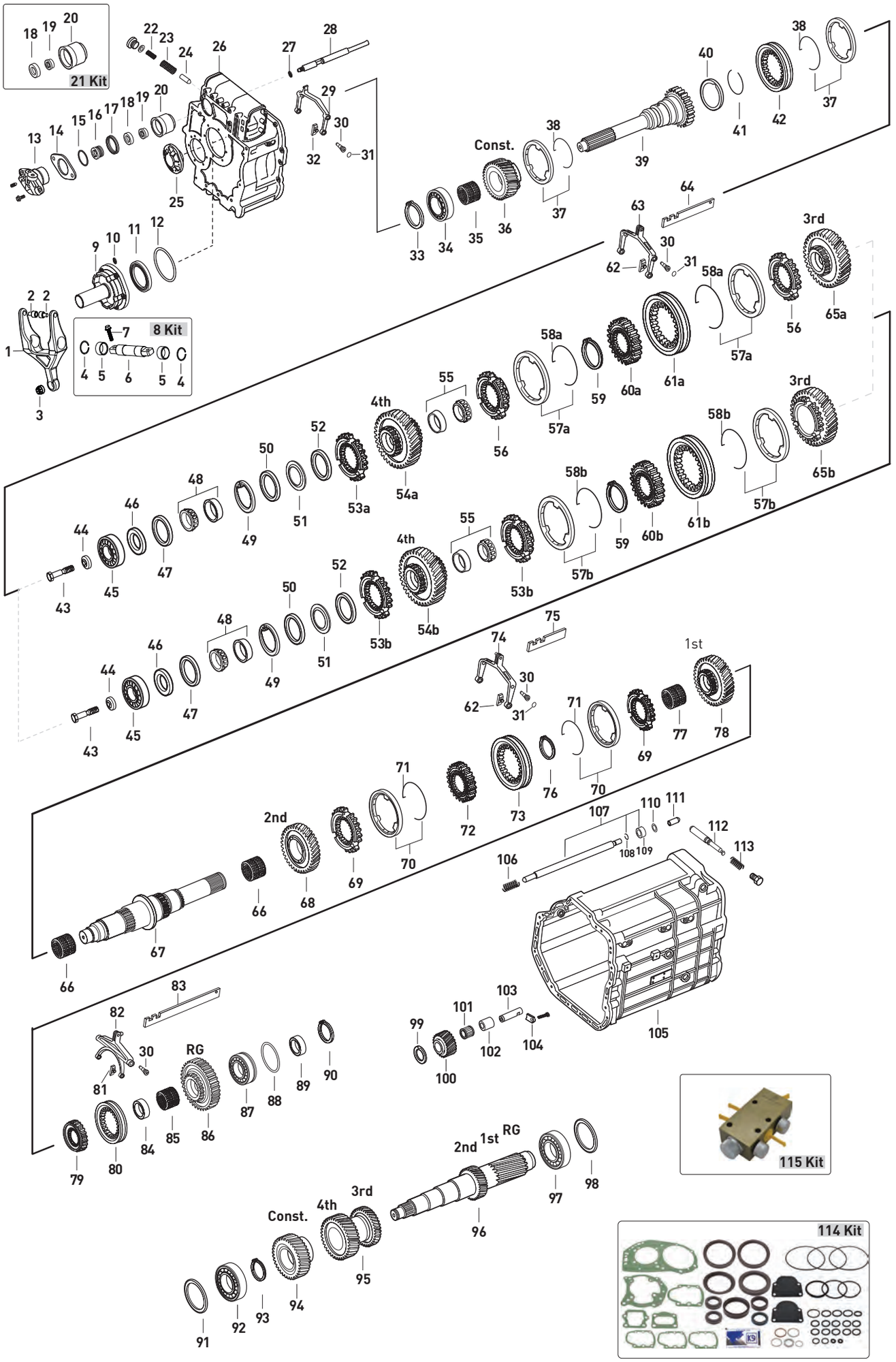




Original parts names, oem numbers, symbols and descriptions used in this catalogue are for reference purposes only.

| Fig. | Kacmaz No | Oem No | Oem Old No | Pcs. | Ürün Tanımı | Description | Sizes | Not | G155-16/11,9 | G155-16/14,0 | G180-16/11,9 | G180-16/14,0 |
|---|---|---|---|---|---|---|---|---|---|---|---|---|
| 49 | | 387 268 1073 | | 1 | 4.VİTES DİŞLİ SEKMANI | RETAINING RING | 3,14mm | | ♦ | ♦ | ♦ | ♦ |
| 50 | K21.04056 | 389 262 1251 | | 1 | 4.VİTES BİLYA ARA AYAR PULU | THRUST WASHER | 2,20mm | | ♦ | ♦ | ♦ | ♦ |
| 50 | K21.04055 | 389 262 2151 | | 1 | 4.VİTES BİLYA ARA AYAR PULU | THRUST WASHER | 2,15mm | | ♦ | ♦ | ♦ | ♦ |
| 50 | K21.04054 | 389 262 1151 | | 1 | 4.VİTES BİLYA ARA AYAR PULU | THRUST WASHER | 2,10mm | | ♦ | ♦ | ♦ | ♦ |
| 50 | K21.04053 | 389 262 2051 | | 1 | 4.VİTES BİLYA ARA AYAR PULU | THRUST WASHER | 2,05mm | | ♦ | ♦ | ♦ | ♦ |
| 50 | K21.04052 | 389 262 1051 | | 1 | 4.VİTES BİLYA ARA AYAR PULU | THRUST WASHER | 2,00mm | | ♦ | ♦ | ♦ | ♦ |
| 50 | K21.04051 | 389 262 1951 | | 1 | 4.VİTES BİLYA ARA AYAR PULU | THRUST WASHER | 1,95mm | | ♦ | ♦ | ♦ | ♦ |
| 50 | K21.04050 | 389 262 0951 | | 1 | 4.VİTES BİLYA ARA AYAR PULU | THRUST WASHER | 1,90mm | | ♦ | ♦ | ♦ | ♦ |
| 50 | K21.04049 | 389 262 1851 | | 1 | 4.VİTES BİLYA ARA AYAR PULU | THRUST WASHER | 1,85mm | | ♦ | ♦ | ♦ | ♦ |
| 50 | K21.04048 | 389 262 0851 | | 1 | 4.VİTES BİLYA ARA AYAR PULU | THRUST WASHER | 1,80mm | | ♦ | ♦ | ♦ | ♦ |
| 50 | K21.04125 | 389 262 1751 | | 1 | 4.VİTES BİLYA ARA AYAR PULU | THRUST WASHER | 1,75mm | | ♦ | ♦ | ♦ | ♦ |
| 50 | K21.04157 | | | 1 | 4.VİTES BİLYA ARA AYAR PULU | THRUST WASHER | 1,60mm | | ♦ | ♦ | ♦ | ♦ |
| 51 | K21.04070 | 389 262 1854 | | 1 | 4.VİTES DİŞLİ BİLYA ARA SACI | SPACER WASHER | | | ♦ | ♦ | ♦ | ♦ |
| 52 | K21.04057 | 389 262 2751 | | 1 | 4.VİTES BİLYA ARA AYAR PULU | THRUST WASHER | 5,40mm | | ♦ | ♦ | ♦ | ♦ |
| 52 | K21.04058 | 389 262 2951 | | 1 | 4.VİTES BİLYA ARA AYAR PULU | THRUST WASHER | 5,50mm | | ♦ | ♦ | ♦ | ♦ |
| 52 | K21.04059 | 389 262 3151 | | 1 | 4.VİTES BİLYA ARA AYAR PULU | THRUST WASHER | 5,60mm | | ♦ | ♦ | ♦ | ♦ |
| 52 | K21.04060 | 389 262 3351 | | 1 | 4.VİTES BİLYA ARA AYAR PULU | THRUST WASHER | 5,70mm | | ♦ | ♦ | ♦ | ♦ |
| 52 | K21.04061 | 389 262 3551 | | 1 | 4.VİTES BİLYA ARA AYAR PULU | THRUST WASHER | 5,80mm | | ♦ | ♦ | ♦ | ♦ |
| 52 | K21.04062 | 389 262 3751 | | 1 | 4.VİTES BİLYA ARA AYAR PULU | THRUST WASHER | 5,90mm | | ♦ | ♦ | ♦ | ♦ |
| 52 | K21.04063 | 389 262 3951 | | 1 | 4.VİTES BİLYA ARA AYAR PULU | THRUST WASHER | 6,00mm | | ♦ | ♦ | ♦ | ♦ |
| 52 | K21.04064 | 389 262 4151 | | 1 | 4.VİTES BİLYA ARA AYAR PULU | THRUST WASHER | 6,10mm | | ♦ | ♦ | ♦ | ♦ |
| 52 | K21.04065 | 389 262 4351 | | 1 | 4.VİTES BİLYA ARA AYAR PULU | THRUST WASHER | 6,20mm | | ♦ | ♦ | ♦ | ♦ |
| 52 | K21.04066 | 389 262 4551 | | 1 | 4.VİTES BİLYA ARA AYAR PULU | THRUST WASHER | 6,30mm | | ♦ | ♦ | ♦ | ♦ |
| 52 | K21.04067 | 389 262 4751 | | 1 | 4.VİTES BİLYA ARA AYAR PULU | THRUST WASHER | 6,40mm | | ♦ | ♦ | ♦ | ♦ |
| 52 | K21.04068 | 389 262 4951 | | 1 | 4.VİTES BİLYA ARA AYAR PULU | THRUST WASHER | 6,50mm | | ♦ | ♦ | ♦ | ♦ |
| 52 | K21.04069 | 389 262 5151 | | 1 | 4.VİTES BİLYA ARA AYAR PULU | THRUST WASHER | 6,60mm | | ♦ | ♦ | ♦ | ♦ |
| 53a | K21.03012 | 389 262 5634 | (389 262 3934) | 1 | TAKVİYE SENKROMENÇ | ENGAGING RING | | | ♦ | ♦ | ♦ | ♦ |
| | | | (389 262 2434) | | | | | | | | | |
| | | | (387 262 0834) | | | | | | | | | |
| 53b | K21.03012 | 389 262 5634 | (389 262 3934) | 2 | TAKVİYE/4.VİTES SENKROMENÇ | ENGAGING RING | | (B)(C)(D) | ♦ | ♦ | ♦ | ♦ |
| | | | (389 262 2434) | | | | | | | | | |
| | | | (387 262 0834) | | | | | | | | | |
| 54a | K21.03096 | 389 262 5610 | (389 262 4410) | 1 | 4.VİTES DİŞLİSİ 24 DİŞ | GEAR 4th 24 T. | | (A) | ♦ | ♦ | ♦ | ♦ |
| 54b | K21.03097 | 389 262 5510 | (389 262 2310) | 1 | 4.VİTES DİŞLİSİ 24 DİŞ | GEAR 4th 24 T. | | (B) | ♦ | ♦ | ♦ | ♦ |
| 54b | K21.03099 | 389 262 1110 | (389 262 0210) | 1 | 4.VİTES DİŞLİSİ 24 DİŞ | GEAR 4th 24 T. | | (C) | ♦ | ♦ | ♦ | ♦ |
| 54b | K21.03098 | 389 262 3710 | (389 262 1710) | 1 | 4.VİTES DİŞLİSİ 24 DİŞ | GEAR 4th 24 T. | | (D) | ♦ | ♦ | ♦ | ♦ |
| | | | (389 262 1610) | | | | | | | | | |
| 55 | K21.03662 | 011 981 7705 | (014 981 8505) | 1 | 4.VİTES DİŞLİSİ ARKA BİLYA | ROLLER BEARING | 55X90X23mm | | ♦ | ♦ | ♦ | ♦ |
| | | | (012 981 1505) | | | | | | | | | |
| 56 | K21.03027 | 945 262 0534 | (389 262 5034) | 2 | 3./4.VİTES SENKROMENÇ | ENGAGING RING | | (A) | ♦ | ♦ | ♦ | ♦ |
| 57a | K21.03016 | 389 262 0737 | (387 262 0937) | 2 | 3./4.VİTES FRENLEME (Mo) | SYNCHRONIZING CONE / Mo | | (A) | ♦ | ♦ | ♦ | ♦ |
| | | | (389 262 1137) | | | | | | | | | |
| 57a | K21.06287 | 389 262 3237 | | 2 | 3./4.VİTES FRENLEME (Mo) | SYNCHRONIZING CONE / Mo | | vertical striped (A) | ♦ | ♦ | ♦ | ♦ |
| 57a | K21.06041 | 945 260 0650 | | 2 | 3./4.VİTES FRENLEME (C) | SYNCHRONIZING CONE / C | | | ♦ | ♦ | ♦ | ♦ |
| 57b | K21.03015 | 389 262 0637 | (387 262 0837) | 2 | 3./4.VİTES FRENLEME (Mo) | SYNCHRONIZING CONE / Mo | | (B)(C)(D) | ♦ | ♦ | ♦ | ♦ |
| | | | (389 262 1037) | | | | | | | | | |
| 57b | K21.06286 | 389 262 3137 | | 2 | 3./4.VİTES FRENLEME (Mo) | SYNCHRONIZING CONE / Mo | | vertical striped (B)(C)(D) | ♦ | ♦ | ♦ | ♦ |
| 57b | K21.03401 | 945 260 0450 | | 2 | 3./4.VİTES FRENLEME (C) | SYNCHRONIZING CONE / C | | (B)(C)(D) | ♦ | ♦ | ♦ | ♦ |
| 58a | K21.03055 | 387 262 0893 | (387 262 0793) | 2 | FRENLEME TELİ | SPRING | | (A) | ♦ | ♦ | ♦ | ♦ |
| 58b | K21.03044 | 387 262 1093 | (387 262 0693) | 2 | FRENLEME TELİ | SPRING | | (B)(C)(D) | ♦ | ♦ | ♦ | ♦ |
| | | | (960 262 1393) | | | | | | | | | |
| 59 | K21.04336 | 387 262 0473 | | 1 | 3./4.VİTES YILDIZ DİŞLİ SEKMANI | RETAINING RING | 2,40mm | | ♦ | ♦ | ♦ | ♦ |
| 59 | | 387 262 0573 | | 1 | 3./4.VİTES YILDIZ DİŞLİ SEKMANI | RETAINING RING | 2,45mm | | ♦ | ♦ | ♦ | ♦ |
| 59 | K21.04352 | 387 262 0673 | | 1 | 3./4.VİTES YILDIZ DİŞLİ SEKMANI | RETAINING RING | 2,50mm | | ♦ | ♦ | ♦ | ♦ |
| 59 | | 387 262 0773 | | 1 | 3./4.VİTES YILDIZ DİŞLİ SEKMANI | RETAINING RING | 2,55mm | | ♦ | ♦ | ♦ | ♦ |

NOTES :
Parts encoded alphabetic and numaric are used together.

NOTLAR :
Alfabetik ve rakam ile kodlanan parçalar birlikte kullanılır.





Original parts names, oem numbers, symbols and descriptions used in this catalogue are for reference purposes only.

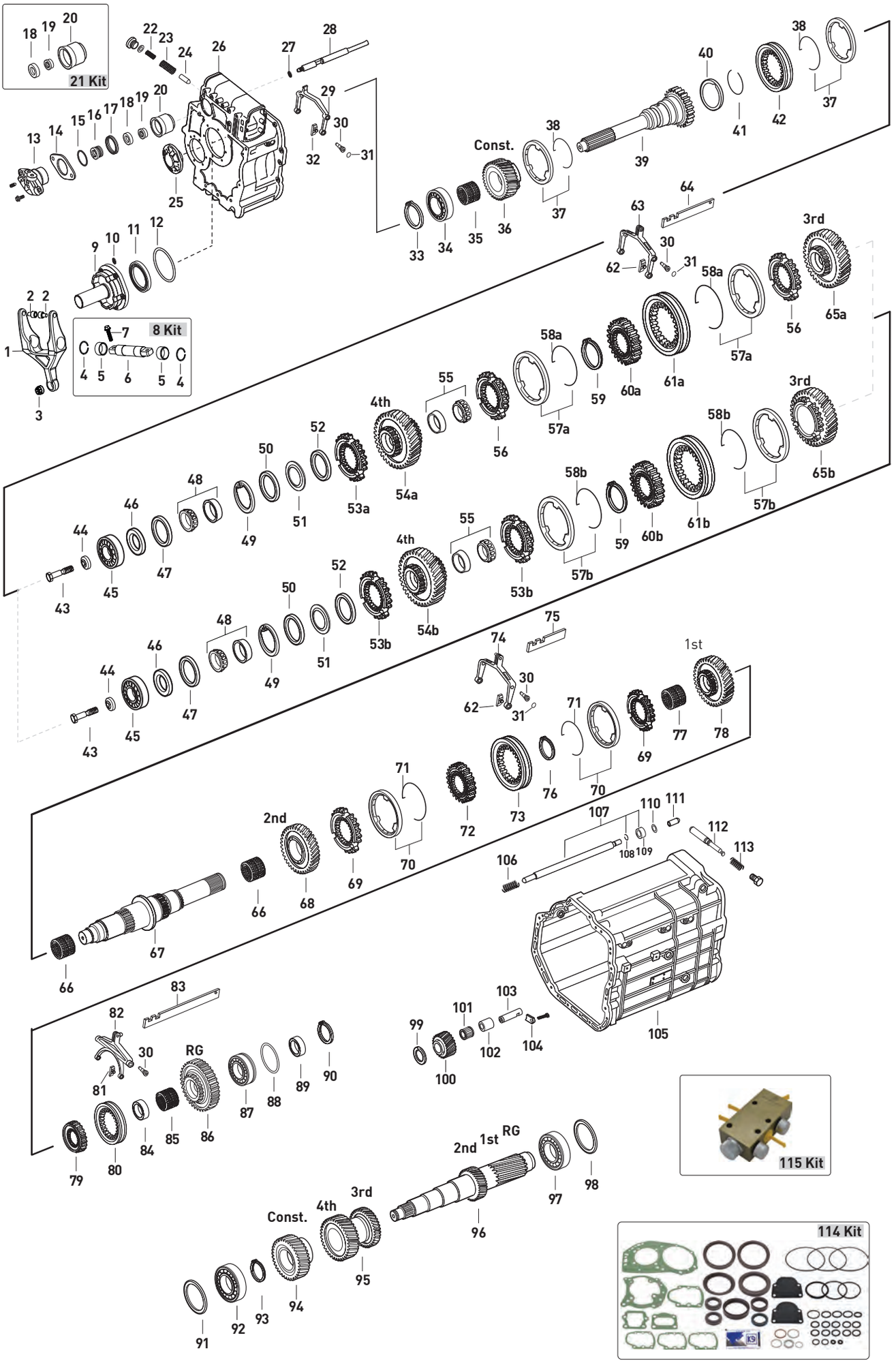




Original parts names, oem numbers, symbols and descriptions used in this catalogue are for reference purposes only.

| Fig. | Kacmaz No | Oem No | Oem Old No | Pcs. | Ürün Tanımı | Description | Sizes | Not | G155-16/11,9 | G155-16/14,0 | G180-16/11,9 | G180-16/14,0 |
|---|---|---|---|---|---|---|---|---|---|---|---|---|
| 59 | K21.04337 | 387 262 0873 | | 1 | 3./4.VİTES YILDIZ DİŞLİ SEKMANI | RETAINING RING | 2,60mm | | ♦ | ♦ | ♦ | ♦ |
| 59 | K21.06929 | 387 262 0973 | | 1 | 3./4.VİTES YILDIZ DİŞLİ SEKMANI | RETAINING RING | 2,65mm | | ♦ | ♦ | ♦ | ♦ |
| 59 | K21.06669 | 387 262 7673 | | 1 | 3./4.VİTES YILDIZ DİŞLİ SEKMANI | RETAINING RING | 2,70mm | | ♦ | ♦ | ♦ | ♦ |
| 59 | K21.07020 | 387 262 7773 | | 1 | 3./4.VİTES YILDIZ DİŞLİ SEKMANI | RETAINING RING | 2,75mm | | ♦ | ♦ | ♦ | ♦ |
| 59 | K21.06930 | 387 262 7873 | | 1 | 3./4.VİTES YILDIZ DİŞLİ SEKMANI | RETAINING RING | 2,80mm | | ♦ | ♦ | ♦ | ♦ |
| 60a | K21.03100 | 389 262 1535 | | 1 | 3./4.VİTES YILDIZ DİŞLİ | SYNCHRONIZER HUB | | (A) | ♦ | ♦ | ♦ | ♦ |
| 60b | K21.03399 | 389 262 0635 | | 1 | 3./4.VİTES YILDIZ DİŞLİ | SYNCHRONIZER HUB | | (B)(C)(D) | ♦ | ♦ | ♦ | ♦ |
| 61a | K21.03010 | 389 262 2923 | (389 262 0723) | 1 | 3./4.VİTES HALKA | ENGAGING SLEEVE | | (A) | ♦ | ♦ | ♦ | ♦ |
| 61b | K21.03011 | 389 262 3023 | (389 262 2223) | 1 | 3./4.VİTES HALKA | ENGAGING SLEVEE | | (B)(D) | ♦ | ♦ | ♦ | ♦ |
| | | | (389 262 0623) | | | | | | | | | |
| 61b | K21.03421 | 387 262 1523 | (387 262 0523) | 1 | 3./4.VİTES HALKA | ENGAGING SLEVEE | | (C) | ♦ | ♦ | ♦ | ♦ |
| 62 | K21.03408 | 389 265 2349 | (389 265 1149) | 4 | 1./ 2-3./4. VİTES HİLAL PABUCU | SLIDING PAD | | | ♦ | ♦ | ♦ | ♦ |
| | | | (389 265 0849) | | | | | | | | | |
| | | | (945 265 0249) | | | | | | | | | |
| 63 | | 389 260 4230 | | 1 | 3./4.VİTES HİLALİ | SHIFTING FORK | | (A) | ♦ | ♦ | ♦ | ♦ |
| 63 | | 389 260 3730 | (389 260 0230) | 1 | 3./4.VİTES HİLALİ | SHIFTING FORK | | (B)(C)(D) | ♦ | ♦ | ♦ | ♦ |
| | | | (389 260 2730) | | | | | | | | | |
| 64 | | 389 265 6304 | | 1 | 3./4.VİTES HİLAL ÇITASI | SHIFTING ROD | | (A) | ♦ | ♦ | ♦ | ♦ |
| 64 | | 389 265 3304 | | 1 | 3./4.VİTES HİLAL ÇITASI | SHIFTING ROD | | (B)(C)(D) | ♦ | ♦ | ♦ | ♦ |
| 65a | K21.03101 | 389 262 2113 | | 1 | 3.VİTES DİŞLİSİ 28 DİŞ | GEAR 3rd 28 T. | | (A) | ♦ | ♦ | ♦ | ♦ |
| 65b | K21.03102 | 389 262 1413 | (389 262 1313) | 1 | 3.VİTES DİŞLİSİ 28 DİŞ | GEAR 3rd 28 T. | | (B)(D) | ♦ | ♦ | ♦ | ♦ |
| | | | (389 262 0913) | | | | | | | | | |
| | | | (389 262 0813) | | | | | | | | | |
| 65b | | 389 262 0313 | (389 262 0013) | 1 | 3.VİTES DİŞLİSİ 28 DİŞ | GEAR 3rd 28 T. | | (C) | ♦ | ♦ | ♦ | ♦ |
| 66 | K21.03810 | 018 981 6610 | (010 981 5310) | 2 | 2./3.VİTES MASURA BİLYA | NEEDLE CAGE | 85X93X53mm | | ♦ | ♦ | ♦ | ♦ |
| 67 | K21.03104 | 389 262 1505 | (389 262 1205) | 1 | KAMALI MİL | MAIN SHAFT | | (3) | ♦ | ♦ | ♦ | ♦ |
| 68 | K21.03106 | 389 262 1312 | (389 262 1212) | 1 | 2.VİTES DİŞLİSİ 32 DİŞ | GEAR 2nd 32 T. | | (A)(B)(D) | ♦ | ♦ | ♦ | ♦ |
| 68 | | 389 262 0312 | (389 262 0012) | 1 | 2.VİTES DİŞLİSİ 32 DİŞ | GEAR 2nd 32 T. | | (C) | ♦ | ♦ | ♦ | ♦ |
| 69 | K21.03025 | 945 262 0434 | (389 262 0034) | 2 | 1./2.VİTES SENKROMENÇ | ENGAGING RING | | | ♦ | ♦ | ♦ | ♦ |
| 70 | K21.03016 | 389 262 0737 | (387 262 0937) | 2 | 1./2.VİTES FRENLEME (Mo) | SYNCHRONIZING CONE / Mo | | | ♦ | ♦ | ♦ | ♦ |
| | | | (389 262 1137) | | | | | | | | | |
| 70 | K21.06287 | 389 262 3237 | | 2 | 1./2.VİTES FRENLEME (Mo) | SYNCHRONIZING CONE / Mo | | vertical striped | ♦ | ♦ | ♦ | ♦ |
| 70 | K21.06041 | 945 260 0650 | | 2 | 1./2.VİTES FRENLEME (C) | SYNCHRONIZING CONE / C | | | ♦ | ♦ | ♦ | ♦ |
| 71 | K21.03055 | 387 262 0893 | (387 262 0793) | 2 | FRENLEME TELİ | SPRING | | | ♦ | ♦ | ♦ | ♦ |
| 72 | K21.03056 | 389 262 0035 | | 1 | 1./2.VİTES YILDIZ DİŞLİ | SYNCHRONIZER HUB | | | ♦ | ♦ | ♦ | ♦ |
| 73 | K21.03010 | 389 262 2923 | (389 262 0723) | 1 | 1./2.VİTES HALKA | ENGAGING SLEEVE | | | ♦ | ♦ | ♦ | ♦ |
| 74 | | 389 260 4430 | (389 260 0130) | 1 | 1./2.VİTES HİLALİ | SHIFTING FORK | | | ♦ | ♦ | ♦ | ♦ |
| 75 | | 389 265 6404 | | 1 | 1./2.VİTES HİLAL ÇITASI | SHIFTING ROD | | | ♦ | ♦ | ♦ | ♦ |
| 75 | | 389 265 3404 | | 1 | 1./2.VİTES HİLAL ÇITASI | SHIFTING ROD | | (C) | ♦ | ♦ | ♦ | ♦ |
| 76 | K21.04343 | 387 262 2073 | | 1 | 1./2.VİTES YILDIZ DİŞLİ SEKMANI | RETAINING RING | 2,40mm | | ♦ | ♦ | ♦ | ♦ |
| 76 | K21.06687 | 387 262 2173 | | 1 | 1./2.VİTES YILDIZ DİŞLİ SEKMANI | RETAINING RING | 2,45mm | | ♦ | ♦ | ♦ | ♦ |
| 76 | K21.04342 | 007 994 0041 | (387 262 2273) | 1 | 1./2.VİTES YILDIZ DİŞLİ SEKMANI | RETAINING RING | 2,50mm | | ♦ | ♦ | ♦ | ♦ |
| 76 | K21.04359 | 387 262 2373 | | 1 | 1./2.VİTES YILDIZ DİŞLİ SEKMANI | RETAINING RING | 2,55mm | | ♦ | ♦ | ♦ | ♦ |
| 76 | K21.04345 | 387 262 2473 | | 1 | 1./2.VİTES YILDIZ DİŞLİ SEKMANI | RETAINING RING | 2,60mm | | ♦ | ♦ | ♦ | ♦ |
| 76 | K21.07021 | 387 262 2573 | | 1 | 1./2.VİTES YILDIZ DİŞLİ SEKMANI | RETAINING RING | 2,65mm | | ♦ | ♦ | ♦ | ♦ |
| 76 | K21.04344 | 387 262 7973 | | 1 | 1./2.VİTES YILDIZ DİŞLİ SEKMANI | RETAINING RING | 2,70mm | | ♦ | ♦ | ♦ | ♦ |
| 76 | K21.07022 | 387 262 8073 | | 1 | 1./2.VİTES YILDIZ DİŞLİ SEKMANI | RETAINING RING | 2,75mm | | ♦ | ♦ | ♦ | ♦ |
| 76 | K21.06588 | 387 262 8173 | | 1 | 1./2.VİTES YILDIZ DİŞLİ SEKMANI | RETAINING RING | 2,80mm | | ♦ | ♦ | ♦ | ♦ |
| 77 | K21.03817 | 019 981 4410 | (007 981 4210) | 1 | 1.VİTES MASURA BİLYA | NEEDLE CAGE | 75X83X55mm | | ♦ | ♦ | ♦ | ♦ |
| | | | (008 981 8310) | | | | | | | | | |
| | | | (009 981 0010) | | | | | | | | | |
| 78 | K21.03108 | 389 262 1611 | (389 262 1511) | 1 | 1.VİTES DİŞLİSİ 38 DİŞ | GEAR 1st 38 T. | | | ♦ | ♦ | ♦ | ♦ |
| 78 | | 389 262 0411 | (389 262 0711) | 1 | 1.VİTES DİŞLİSİ 38 DİŞ | GEAR 1st 38 T. | | (C) | ♦ | ♦ | ♦ | ♦ |
| 79 | K21.03059 | 389 262 0135 | | 1 | GERİ VİTES YILDIZ DİŞLİ | SYNCHRONIZER HUB | | | ♦ | ♦ | ♦ | ♦ |
| 80 | K21.03060 | 389 262 1723 | (389 262 0023) | 1 | GERİ VİTES HALKASI | ENGAGING SLEEVE | | | ♦ | ♦ | ♦ | ♦ |

NOTES :
Parts encoded alphabetic and numaric are used together.

NOTLAR :
Alfabetik ve rakam ile kodlanan parçalar birlikte kullanılır.





Original parts names, oem numbers, symbols and descriptions used in this catalogue are for reference purposes only.

# GEARBOX G 155 - 16 , G 180 - 16 / 11,9 - 14,0

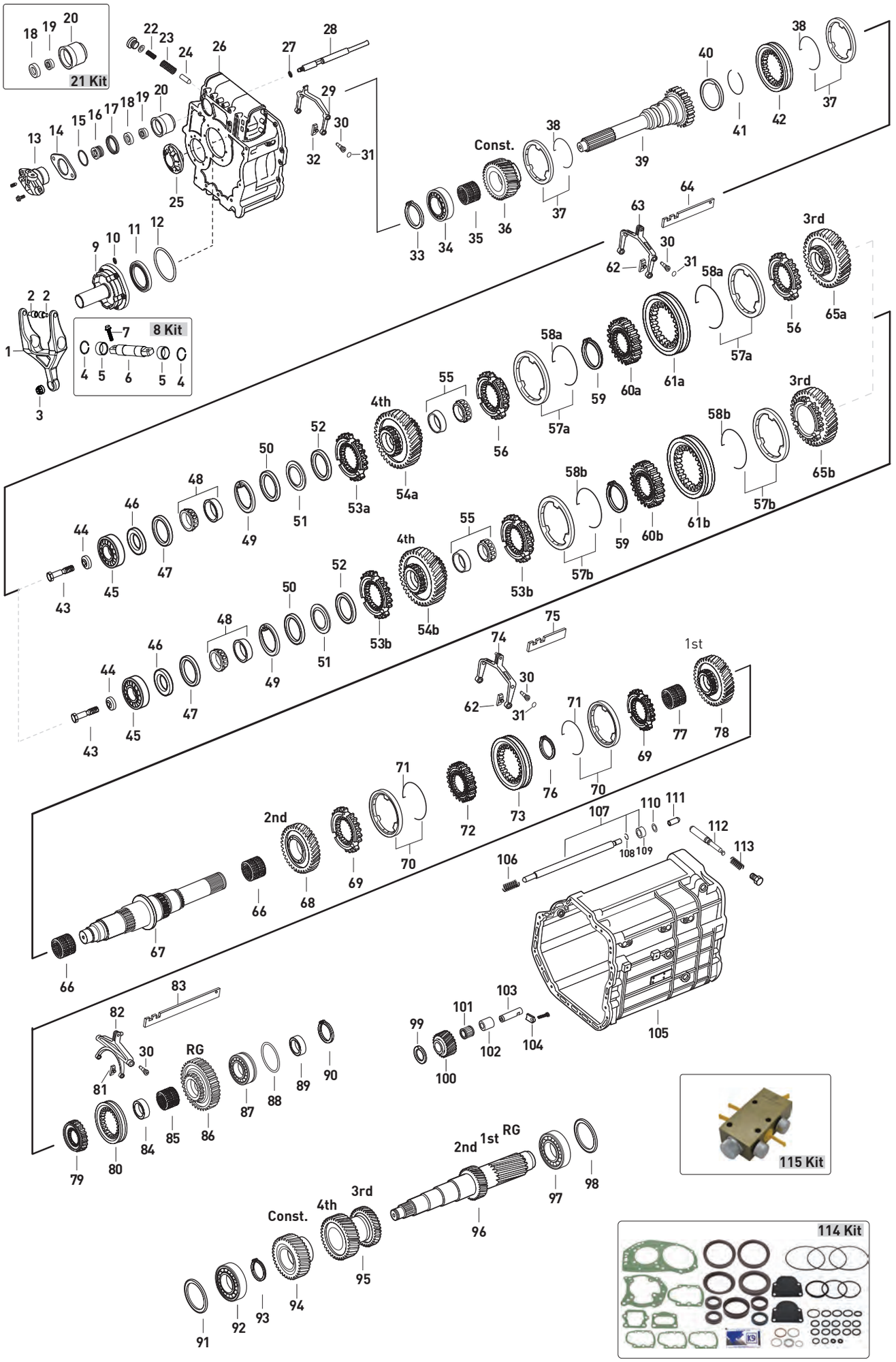




Original parts names, oem numbers, symbols and descriptions used in this catalogue are for reference purposes only.

| Fig. | Kacmaz No | Oem No | Oem Old No | Pcs. | Ürün Tanımı | Description | Sizes | Not | G155-16/11,9 | G155-16/14,0 | G180-16/11,9 | G180-16/14,0 |
|---|---|---|---|---|---|---|---|---|---|---|---|---|
| 80 | K21.03061 | 389 262 1823 | (389 262 0923) | 1 | GERİ VİTES HALKASI | ENGAGING SLEEVE | | | ♦ | ♦ | ♦ | ♦ |
| 81 | K21.03410 | 947 265 0249 | (945 265 0149) | 2 | GERİ VİTES HİLAL PABUCU | SLIDING PAD | | | ♦ | ♦ | ♦ | ♦ |
| 82 | | 389 260 4730 | (389 260 1630) | 1 | GERİ VİTES HİLALİ | SHIFTING FORK | | | ♦ | ♦ | ♦ | ♦ |
| 83 | | 389 265 3504 | | 1 | GERİ VİTES HİLAL ÇITASI | SHIFTING ROD | | | ♦ | ♦ | ♦ | ♦ |
| 84 | K21.03112 | 389 262 2550 | (389 262 1650) | 1 | GERİ VİTES MASURA BİLYA ÇANAĞI | BEARING RACE | | | ♦ | ♦ | ♦ | ♦ |
| | | | (389 262 0050) | | | | | | | | | |
| 85 | K21.03803 | 009 981 1510 | (017 981 7810) | 1 | GERİ VİTES MASURA BİLYA | NEEDLE CAGE | 78X86X35mm | | ♦ | ♦ | ♦ | ♦ |
| | | | (008 981 9310) | | | | | | | | | |
| | | | (012 981 9110) | | | | | | | | | |
| 86 | K21.03111 | 389 262 0333 | (389 262 0033) | 1 | GERİ VİTES DİŞLİSİ 34 DİŞ | REVERSE GEAR 34 T. | | | ♦ | ♦ | ♦ | ♦ |
| 86 | K21.03110 | 389 262 1033 | | 1 | GERİ VİTES DİŞLİSİ 34 DİŞ | REVERSE GEAR 34 T. | | | ♦ | ♦ | ♦ | ♦ |
| 87 | K21.06277 | 012 981 3905 | | 1 | KAMALI MİL ARKA BİLYA | ROLLER BEARING | 60X130X33,2mm | (K) | ♦ | ♦ | ♦ | ♦ |
| 87 | K21.03623 | 014 981 6105 | (016 981 1305) | 1 | KAMALI MİL ARKA BİLYA | ROLLER BEARING | 60X130X33,2mm | | ♦ | ♦ | ♦ | ♦ |
| | | | (014 981 7505) | | | | | | | | | |
| 88 | K21.04182 | 389 262 3552 | | 1 | KAMALI MİL ARKA BİLYA RAYNELİ | THRUST WASHER | 0,10mm | | ♦ | ♦ | ♦ | ♦ |
| 88 | K21.04184 | 389 262 3652 | | 1 | KAMALI MİL ARKA BİLYA RAYNELİ | THRUST WASHER | 0,15mm | | ♦ | ♦ | ♦ | ♦ |
| 88 | K21.04152 | 389 262 3752 | | 1 | KAMALI MİL ARKA BİLYA RAYNELİ | THRUST WASHER | 0,20mm | | ♦ | ♦ | ♦ | ♦ |
| 88 | K21.94152 | | | 1 | KAMALI MİL ARKA BİLYA RAYNELİ | THRUST WASHER | 0,30mm | | ♦ | ♦ | ♦ | ♦ |
| 88 | K21.04183 | 389 262 3852 | | 1 | KAMALI MİL ARKA BİLYA RAYNELİ | THRUST WASHER | 0,40mm | | ♦ | ♦ | ♦ | ♦ |
| 88 | K21.94183 | | | 1 | KAMALI MİL ARKA BİLYA RAYNELİ | THRUST WASHER | 0,50mm | | ♦ | ♦ | ♦ | ♦ |
| 88 | K21.84183 | | | 1 | KAMALI MİL ARKA BİLYA RAYNELİ | THRUST WASHER | 0,60mm | | ♦ | ♦ | ♦ | ♦ |
| 88 | K21.74183 | | | 1 | KAMALI MİL ARKA BİLYA RAYNELİ | THRUST WASHER | 0,70mm | | ♦ | ♦ | ♦ | ♦ |
| 88 | K21.04185 | 389 262 3952 | | 1 | KAMALI MİL ARKA BİLYA RAYNELİ | THRUST WASHER | 0,80mm | | ♦ | ♦ | ♦ | ♦ |
| 88 | K21.06718 | 010 990 8382 | | 1 | KAMALI MİL ARKA BİLYA RAYNELİ | THRUST WASHER | 1,00mm | | ♦ | ♦ | ♦ | ♦ |
| 89 | | 389 262 0152 | | 1 | KAMALI MİL ARKA BİLYA PULU | THRUST WASHER | 20,3mm | | ♦ | ♦ | ♦ | ♦ |
| 89 | K21.04131 | 389 262 3754 | | 1 | KAMALI MİL ARKA BİLYA PULU | THRUST WASHER | 18mm | (K) | ♦ | ♦ | ♦ | ♦ |
| 90 | K21.04331 | 007 994 1841 | (006 994 9941) | 1 | KAMALI MİL ARKA BİLYA SEKMANI | RETAINING RING | 2,50mm | | ♦ | ♦ | ♦ | ♦ |
| 90 | | 006 994 7341 | | 1 | KAMALI MİL ARKA BİLYA SEKMANI | RETAINING RING | | | ♦ | ♦ | ♦ | ♦ |
| 91 | K21.04192 | 406 337 0252 | | 1 | GRUP MİLİ ÖN BİLYA RAYNELİ | THRUST WASHER | 0,10mm | | ♦ | ♦ | ♦ | ♦ |
| 91 | K21.04150 | 406 337 0352 | | 1 | GRUP MİLİ ÖN BİLYA RAYNELİ | THRUST WASHER | 0,20mm | | ♦ | ♦ | ♦ | ♦ |
| 91 | K21.94150 | | | 1 | GRUP MİLİ ÖN BİLYA RAYNELİ | THRUST WASHER | 0,25mm | | ♦ | ♦ | ♦ | ♦ |
| 91 | K21.04338 | 406 337 0452 | | 1 | GRUP MİLİ ÖN BİLYA RAYNELİ | THRUST WASHER | 0,30mm | | ♦ | ♦ | ♦ | ♦ |
| 91 | K21.04196 | 389 263 5352 | (389 263 3252) | 1 | GRUP MİLİ ÖN BİLYA RAYNELİ | THRUST WASHER | 0,40mm | | ♦ | ♦ | ♦ | ♦ |
| 91 | K21.04194 | 389 263 3352 | | 1 | GRUP MİLİ ÖN BİLYA RAYNELİ | THRUST WASHER | 0,45mm | | ♦ | ♦ | ♦ | ♦ |
| 91 | K21.06719 | 389 263 5652 | | 1 | GRUP MİLİ ÖN BİLYA RAYNELİ | THRUST WASHER | 0,49mm | | ♦ | ♦ | ♦ | ♦ |
| 91 | K21.04197 | 389 263 5852 | (389 263 3552) | 1 | GRUP MİLİ ÖN BİLYA RAYNELİ | THRUST WASHER | 0,55mm | | ♦ | ♦ | ♦ | ♦ |
| 91 | K21.04340 | 389 263 6052 | | 1 | GRUP MİLİ ÖN BİLYA RAYNELİ | THRUST WASHER | 0,61mm | | ♦ | ♦ | ♦ | ♦ |
| 91 | K21.04198 | 389 263 6352 | (389 263 3852) | 1 | GRUP MİLİ ÖN BİLYA RAYNELİ | THRUST WASHER | 0,70mm | | ♦ | ♦ | ♦ | ♦ |
| 91 | K21.04154 | 389 263 3952 | | 1 | GRUP MİLİ ÖN BİLYA RAYNELİ | THRUST WASHER | 0,75mm | | ♦ | ♦ | ♦ | ♦ |
| 91 | K21.04199 | 389 263 6852 | | 1 | GRUP MİLİ ÖN BİLYA RAYNELİ | THRUST WASHER | 0,85mm | | ♦ | ♦ | ♦ | ♦ |
| 91 | K21.04200 | 389 263 7352 | | 1 | GRUP MİLİ ÖN BİLYA RAYNELİ | THRUST WASHER | 1,00mm | | ♦ | ♦ | ♦ | ♦ |
| 91 | K21.04201 | 389 263 7852 | | 1 | GRUP MİLİ ÖN BİLYA RAYNELİ | THRUST WASHER | 1,15mm | | ♦ | ♦ | ♦ | ♦ |
| 91 | K21.04202 | 389 263 8352 | | 1 | GRUP MİLİ ÖN BİLYA RAYNELİ | THRUST WASHER | 1,30mm | | ♦ | ♦ | ♦ | ♦ |
| 92 | K21.03606 | 015 981 9005 | (014 981 1405) | 1 | GRUP MİLİ ÖN BİLYA | ROLLER BEARING | 50,8X100X35mm | | ♦ | ♦ | ♦ | ♦ |
| 93 | K21.07029 | 387 994 1541 | | 1 | GRUP MİLİ ÖN BİLYA SEKMANI | RETAINING RING | 2,35mm | | ♦ | ♦ | ♦ | ♦ |
| 93 | K21.07030 | 387 994 1341 | | 1 | GRUP MİLİ ÖN BİLYA SEKMANI | RETAINING RING | 2,45mm | | ♦ | ♦ | ♦ | ♦ |
| 93 | K21.07031 | 387 994 1141 | | 1 | GRUP MİLİ ÖN BİLYA SEKMANI | RETAINING RING | 2,55mm | | ♦ | ♦ | ♦ | ♦ |
| 93 | K21.07032 | 387 994 0941 | | 1 | GRUP MİLİ ÖN BİLYA SEKMANI | RETAINING RING | 2,65mm | | ♦ | ♦ | ♦ | ♦ |
| 93 | K21.07033 | 387 994 0741 | | 1 | GRUP MİLİ ÖN BİLYA SEKMANI | RETAINING RING | 2,75mm | | ♦ | ♦ | ♦ | ♦ |
| 93 | K21.07034 | 387 994 0541 | | 1 | GRUP MİLİ ÖN BİLYA SEKMANI | RETAINING RING | 2,85mm | | ♦ | ♦ | ♦ | ♦ |
| 93 | K21.07035 | 387 994 0341 | | 1 | GRUP MİLİ ÖN BİLYA SEKMANI | RETAINING RING | 2,95mm | | ♦ | ♦ | ♦ | ♦ |
| 94 | K21.03114 | 389 263 1110 | | 1 | TAKVİYE DİŞLİ KARŞILIĞI 23 DİŞ | CONSTANT GEAR 23 T. | | (1) | ♦ | | ♦ | |
| 94 | K21.03116 | 389 263 1210 | | 1 | TAKVİYE DİŞLİ KARŞILIĞI 27 DİŞ | CONSTANT GEAR 27 T. | | (1) | | ♦ | | ♦ |
| 94 | K21.03115 | 389 263 0410 | | 1 | TAKVİYE DİŞLİ KARŞILIĞI 23 DİŞ | CONSTANT GEAR 23 T. | | (2) | ♦ | | ♦ | |
| 94 | K21.03117 | 389 263 0910 | (389 263 0310) | 1 | TAKVİYE DİŞLİ KARŞILIĞI 27 DİŞ | CONSTANT GEAR 27 T. | | (2) | | ♦ | | ♦ |

NOTES :
Parts encoded alphabetic and numaric are used together.

NOTLAR :
Alfabetik ve rakam ile kodlanan parçalar birlikte kullanılır.





Original parts names, oem numbers, symbols and descriptions used in this catalogue are for reference purposes only.

# GEARBOX G 155 - 16 , G 180 - 16 / 11,9 - 14,0

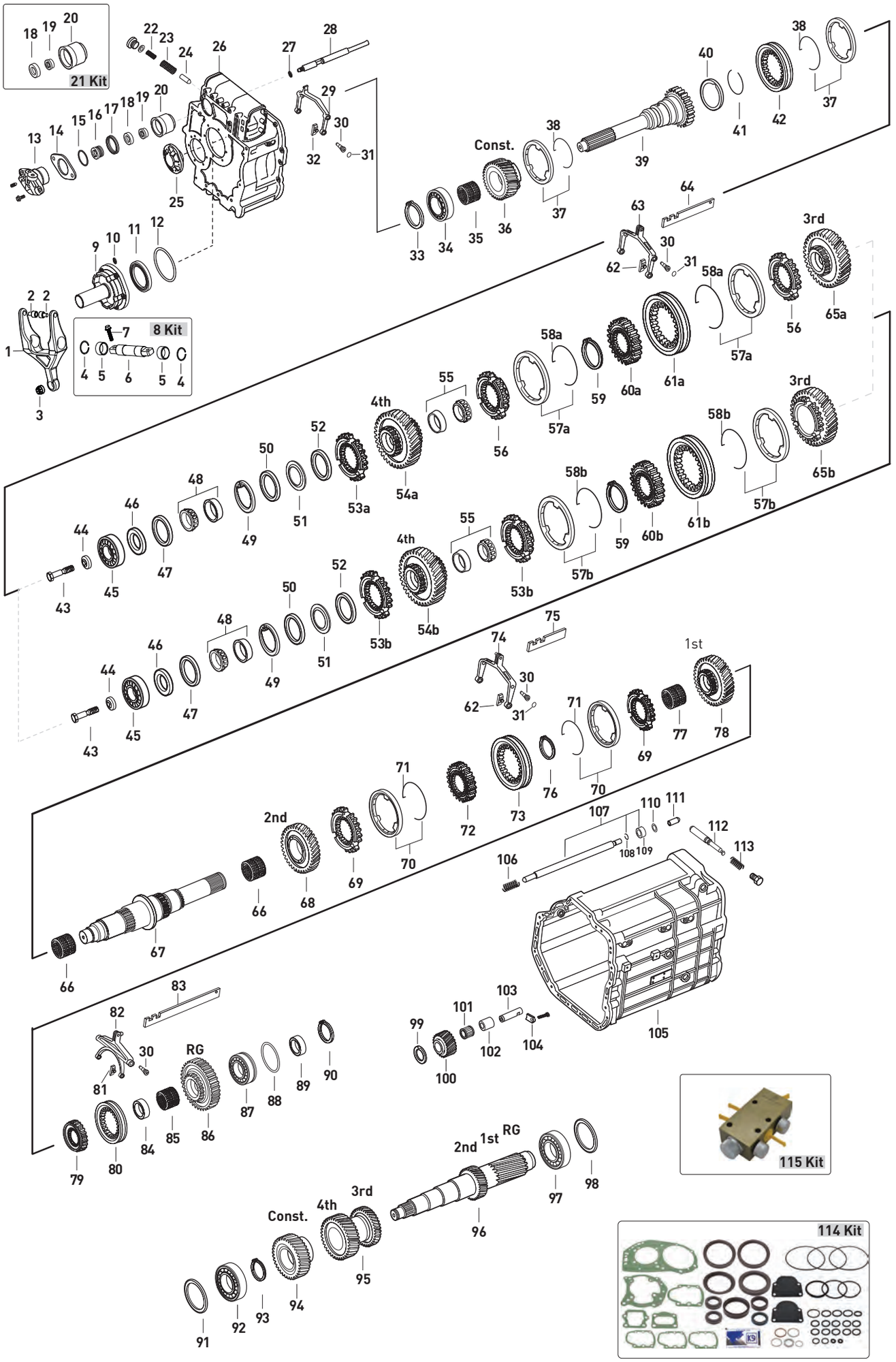




Original parts names, oem numbers, symbols and descriptions used in this catalogue are for reference purposes only.

| Fig. | Kacmaz No | Oem No | Oem Old No | Pcs. | Ürün Tanımı | Description | Sizes | Not | G155-16/11,9 | G155-16/14,0 | G180-16/11,9 | G180-16/14,0 |
|---|---|---|---|---|---|---|---|---|---|---|---|---|
| 95 | K21.03118 | 389 263 1413 | | 1 | 3./4.VİTES DİŞLİ KARŞILIĞI 21/25 DİŞ | DOUBLE GEAR 3rd/4th 21/25 T. | | (A) | ♦ | ♦ | ♦ | ♦ |
| 95 | K21.03119 | 389 263 1013 | (389 263 0913) | 1 | 3./4.VİTES DİŞLİ KARŞILIĞI 21/25 DİŞ | DOUBLE GEAR 3rd/4th 21/25 T. | | (B)(D) | ♦ | ♦ | ♦ | ♦ |
| 95 | K21.03120 | 389 263 0313 | (389 263 0013) | 1 | 3./4.VİTES DİŞLİ KARŞILIĞI 21/25 DİŞ | DOUBLE GEAR 3rd/4th 21/25 T. | | (C) | ♦ | ♦ | ♦ | ♦ |
| 96 | K21.03121 | 389 263 0802 | | 1 | GRUP MİLİ 14/17 DİŞ | COUNTER SHAFT 14/17 T. | | (A)(B)(D) | ♦ | ♦ | ♦ | ♦ |
| 96 | | 389 263 0302 | | 1 | GRUP MİLİ 14/17 DİŞ | COUNTER SHAFT 14/17 T. | | (C) | ♦ | ♦ | ♦ | ♦ |
| 97 | K21.03624 | 016 981 1205 | (012 981 9405) | 1 | GRUP MİLİ ARKA BİLYA | ROLLER BEARING | 60X130X33,8mm | | ♦ | ♦ | ♦ | ♦ |
| | | | (012 981 9205) | | | | | | | | | |
| 98 | K21.06697 | | | 1 | GRUP MİLİ ARKA BİLYA RAYNELİ | THRUST WASHER | 1,30mm | | ♦ | ♦ | ♦ | ♦ |
| 98 | K21.04232 | 389 263 5052 | | 1 | GRUP MİLİ ARKA BİLYA RAYNELİ | THRUST WASHER | 1,15mm | | ♦ | ♦ | ♦ | ♦ |
| 98 | K21.04231 | 389 263 4952 | | 1 | GRUP MİLİ ARKA BİLYA RAYNELİ | THRUST WASHER | 1,10mm | | ♦ | ♦ | ♦ | ♦ |
| 98 | K21.04230 | 389 263 4852 | | 1 | GRUP MİLİ ARKA BİLYA RAYNELİ | THRUST WASHER | 1,05mm | | ♦ | ♦ | ♦ | ♦ |
| 98 | K21.04229 | 389 263 4752 | | 1 | GRUP MİLİ ARKA BİLYA RAYNELİ | THRUST WASHER | 1,00mm | | ♦ | ♦ | ♦ | ♦ |
| 98 | K21.04228 | 389 263 4652 | | 1 | GRUP MİLİ ARKA BİLYA RAYNELİ | THRUST WASHER | 0,95mm | | ♦ | ♦ | ♦ | ♦ |
| 98 | K21.04227 | 389 263 4552 | | 1 | GRUP MİLİ ARKA BİLYA RAYNELİ | THRUST WASHER | 0,90mm | | ♦ | ♦ | ♦ | ♦ |
| 98 | K21.04226 | 389 263 4452 | | 1 | GRUP MİLİ ARKA BİLYA RAYNELİ | THRUST WASHER | 0,85mm | | ♦ | ♦ | ♦ | ♦ |
| 98 | K21.04225 | 389 263 0552 | | 1 | GRUP MİLİ ARKA BİLYA RAYNELİ | THRUST WASHER | 0,80mm | | ♦ | ♦ | ♦ | ♦ |
| 98 | K21.04224 | 389 263 4352 | | 1 | GRUP MİLİ ARKA BİLYA RAYNELİ | THRUST WASHER | 0,75mm | | ♦ | ♦ | ♦ | ♦ |
| 98 | K21.04155 | 389 263 4252 | | 1 | GRUP MİLİ ARKA BİLYA RAYNELİ | THRUST WASHER | 0,70mm | | ♦ | ♦ | ♦ | ♦ |
| 98 | K21.04223 | 389 263 4152 | | 1 | GRUP MİLİ ARKA BİLYA RAYNELİ | THRUST WASHER | 0,65mm | | ♦ | ♦ | ♦ | ♦ |
| 98 | K21.04153 | 389 263 4052 | | 1 | GRUP MİLİ ARKA BİLYA RAYNELİ | THRUST WASHER | 0,60mm | | ♦ | ♦ | ♦ | ♦ |
| 98 | K21.06695 | | | 1 | GRUP MİLİ ARKA BİLYA RAYNELİ | THRUST WASHER | 0,55mm | | ♦ | ♦ | ♦ | ♦ |
| 98 | K21.06692 | | | 1 | GRUP MİLİ ARKA BİLYA RAYNELİ | THRUST WASHER | 0,50mm | | ♦ | ♦ | ♦ | ♦ |
| 98 | K21.06694 | | | 1 | GRUP MİLİ ARKA BİLYA RAYNELİ | THRUST WASHER | 0,45mm | | ♦ | ♦ | ♦ | ♦ |
| 98 | K21.06693 | 389 263 0452 | | 1 | GRUP MİLİ ARKA BİLYA RAYNELİ | THRUST WASHER | 0,40mm | | ♦ | ♦ | ♦ | ♦ |
| 98 | K21.04358 | | | 1 | GRUP MİLİ ARKA BİLYA RAYNELİ | THRUST WASHER | 0,30mm | | ♦ | ♦ | ♦ | ♦ |
| 98 | K21.04357 | | | 1 | GRUP MİLİ ARKA BİLYA RAYNELİ | THRUST WASHER | 0,20mm | | ♦ | ♦ | ♦ | ♦ |
| 98 | K21.04156 | 389 263 0152 | | 1 | GRUP MİLİ ARKA BİLYA RAYNELİ | THRUST WASHER | 0,10mm | | ♦ | ♦ | ♦ | ♦ |
| 99 | K21.04209 | 389 263 0062 | | 2 | KÜÇÜK GERİ VİTES PULU | THRUST WASHER | 1,00mm | | ♦ | ♦ | ♦ | ♦ |
| 100 | | 389 263 1531 | | 1 | KÜÇÜK GERİ VİTES DİŞLİSİ 18 DİŞ | REV.IDLER GEAR 18 T. | | (5) | ♦ | ♦ | ♦ | ♦ |
| 100 | | 389 263 0331 | (389 263 0031) | 1 | KÜÇÜK GERİ VİTES DİŞLİSİ 18 DİŞ | REV.IDLER GEAR 18 T. | | (6) | ♦ | ♦ | ♦ | ♦ |
| 101 | K21.03838 | 012 981 8910 | (012 981 9010) | 1 | KÜÇÜK GERİ VİTES MASURA BİLYA | NEEDLE CAGE | 42X50X51mm | | ♦ | ♦ | ♦ | ♦ |
| 102 | K21.06031 | 389 263 0850 | | 1 | K.GERİ VİTES MASURA BİLYA ÇANAĞI | BUSHING | 18mm | (5) | ♦ | ♦ | ♦ | ♦ |
| 102 | | 389 263 0050 | | 1 | K.GERİ VİTES MASURA BİLYA ÇANAĞI | BUSHING | 19mm | (6) | ♦ | ♦ | ♦ | ♦ |
| 103 | K21.06037 | 976 263 0030 | (976 263 1230) | 1 | KÜÇÜK GERİ VİTES PİMİ | PIN | | (5) | ♦ | ♦ | ♦ | ♦ |
| 103 | | 389 263 0430 | | 1 | KÜÇÜK GERİ VİTES PİMİ | PIN | | (6) | ♦ | ♦ | ♦ | ♦ |
| 104 | K21.07010 | 945 263 0041 | | 1 | KÜÇÜK GERİ VİTES PİM KİLİTLEMESİ | KEY | | (5) | ♦ | ♦ | ♦ | ♦ |
| 104 | | 389 263 0041 | | 1 | KÜÇÜK GERİ VİTES PİM KİLİTLEMESİ | KEY | | (6) | ♦ | ♦ | ♦ | ♦ |
| 105 | | 655 260 3623 | (389 261 3126) | 1 | ŞANZIMAN ORTA GÖVDE | HOUSING | | | ♦ | ♦ | ♦ | ♦ |
| 105 | | 389 261 2903 | (389 261 3303) | 1 | ŞANZIMAN ORTA GÖVDE | HOUSING | | | ♦ | ♦ | ♦ | ♦ |
| 105 | | 389 261 2603 | | 1 | ŞANZIMAN ORTA GÖVDE | HOUSING | | | ♦ | ♦ | ♦ | ♦ |
| 105 | | 389 261 1703 | | 1 | ŞANZIMAN ORTA GÖVDE | HOUSING | | | ♦ | ♦ | ♦ | ♦ |
| 106 | | 389 993 0501 | | 1 | KİLİTLEME MİL YAYI | SPRING | | | ♦ | ♦ | ♦ | ♦ |
| 107 | K21.03394 | 389 268 4825 | | 1 | KİLİTLEME MİLİ | SHIFTING ROD | | | ♦ | ♦ | ♦ | ♦ |
| 108 | | 007993 012200 | | 1 | KİLİTLEME MİLİ SEKMANI | RETAINING RING | | | ♦ | ♦ | ♦ | ♦ |
| 109 | | 389 268 0051 | | 1 | KİLİTLEME MİL BURCU | SPACER RING | | | ♦ | ♦ | ♦ | ♦ |
| 110 | | 000998 006019 | | 1 | KİLİTLEME MİLİ AYAR RAYNELİ | FITTED WASHER | 0,10mm | | ♦ | ♦ | ♦ | ♦ |
| 110 | | 000998 006020 | | 1 | KİLİTLEME MİLİ AYAR RAYNELİ | FITTED WASHER | 0,20mm | | ♦ | ♦ | ♦ | ♦ |
| 110 | | 000988 006021 | | 1 | KİLİTLEME MİLİ AYAR RAYNELİ | FITTED WASHER | 0,30mm | | ♦ | ♦ | ♦ | ♦ |
| 110 | | 000988 006013 | | 1 | KİLİTLEME MİLİ AYAR RAYNELİ | FITTED WASHER | 0,50mm | | ♦ | ♦ | ♦ | ♦ |
| 110 | | 000988 006001 | | 1 | KİLİTLEME MİLİ AYAR RAYNELİ | FITTED WASHER | 1,00mm | | ♦ | ♦ | ♦ | ♦ |
| 111 | K21.03489 | 389 268 0674 | | 1 | KİLİTLEME MİL FİŞEĞİ | PIN | | | ♦ | ♦ | ♦ | ♦ |
| 112 | K21.03486 | 389 267 0974 | | 1 | AĞIR SERİ KİLİTLEME MİLİ | PIN | | | ♦ | ♦ | ♦ | ♦ |
| 113 | K21.06006 | 389 993 3401 | (389 993 0601) | 1 | AĞIR SERİ KİLİTLEME YAYI | SPRING | | | ♦ | ♦ | ♦ | ♦ |
| 114 | K21.03543 | | | Kit | CONTA TAKIMI | GASKET KIT | | | ♦ | ♦ | ♦ | ♦ |
| 115 | K21.06851 | 001 260 2057 | (001 260 2657) | 1 | VALF | VALVE | | | ♦ | ♦ | ♦ | ♦ |

NOTES :
Parts encoded alphabetic and numaric are used together.

NOTLAR :
Alfabetik ve rakam ile kodlanan parçalar birlikte kullanılır.





Original parts names, oem numbers, symbols and descriptions used in this catalogue are for reference purposes only.

# GEARBOX G 155 - 16 , G 180 - 16 / 11,9 - 14,0

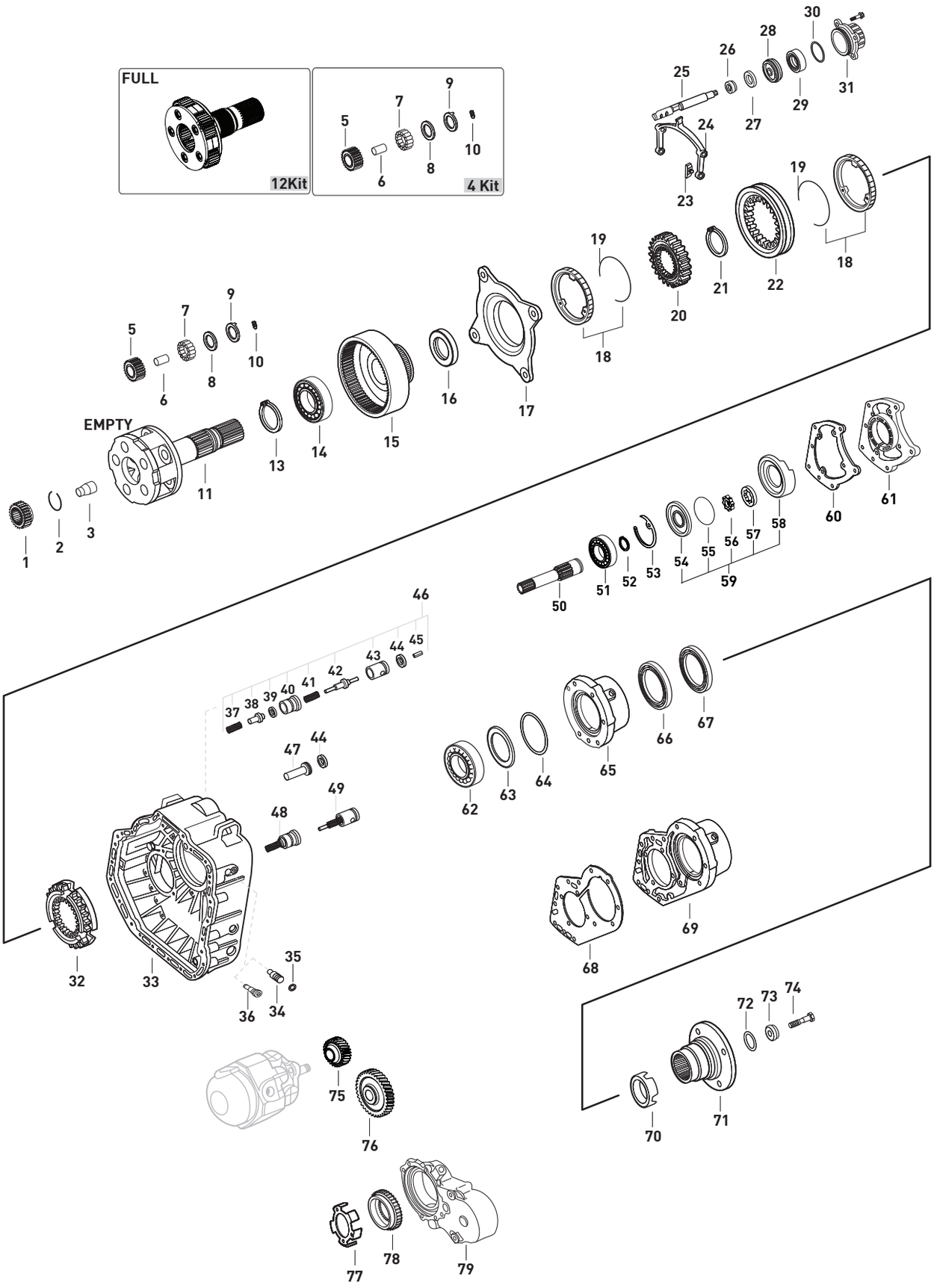




Original parts names, oem numbers, symbols and descriptions used in this catalogue are for reference purposes only.

| Fig. | Kacmaz No | Oem No | Oem Old No | Pcs. | Ürün Tanımı | Description | Sizes | Not | G155-16/11,9 | G155-16/14,0 | G180-16/11,9 | G180-16/14,0 |
|---|---|---|---|---|---|---|---|---|---|---|---|---|
| 1 | K21.03113 | 389 262 0209 | | 1 | GÜNEŞ DİŞLİ 25 DİŞ | SUN GEAR 25 T. | | (A) | ♦ | ♦ | ♦ | ♦ |
| 1 | K21.03014 | 389 262 0409 | | 1 | GÜNEŞ DİŞLİ 25 DİŞ | SUN GEAR 25 T . | | (B) | ♦ | ♦ | ♦ | ♦ |
| 1 | K21.03127 | 389 262 0009 | | 1 | GÜNEŞ DİŞLİ 25 DİŞ | SUN GEAR 25 T. | | (C) | ♦ | ♦ | ♦ | ♦ |
| 2 | | 007993 040200 | | 1 | ŞANZ.HEYKEL YAĞ BORU SEKMANI | SNAP RING | | | ♦ | ♦ | ♦ | ♦ |
| 3 | | 389 269 0134 | | 1 | ŞANZ.HEYKEL YAĞ BORUSU | OIL TUBE | | | ♦ | ♦ | ♦ | ♦ |
| 4 | K21.03123 | 389 260 0497 | | 1 | HEYKEL KOZA DİŞLİ TAKIMI | PLANETARY GEAR SET | | (A) | ♦ | ♦ | ♦ | ♦ |
| 4 | K21.03124 | 389 260 0297 | | 1 | HEYKEL KOZA DİŞLİ TAKIMI | PLANETARY GEAR SET | | (B) | ♦ | ♦ | ♦ | ♦ |
| 4 | | 389 260 0097 | | 1 | HEYKEL KOZA DİŞLİ TAKIMI | PLANETARY GEAR SET | | (C) | ♦ | ♦ | ♦ | ♦ |
| 5 | K21.06034 | 389 262 0906 | | 5 | HEYKEL KOZA DİŞLİ 26 DİŞ | PLANETARY GEAR 26 T. | | (A) | ♦ | ♦ | ♦ | ♦ |
| 6 | K21.03437 | 389 262 0407 | | 5 | HEYKEL KOZA DİŞLİ PİMİ | PLANETARY GEAR PIN | | (A) | ♦ | ♦ | ♦ | ♦ |
| 7 | K21.03816 | 000 981 4186 | (000 981 4386) | 125 | HEYKEL KOZA DİŞLİ TANE BİLYA | NEEDLE ROLLER | D5X39,6 | (A) | ♦ | ♦ | ♦ | ♦ |
| 7 | K21.03836 | 001 981 2787 | (001 981 2887) | 125 | HEYKEL KOZA DİŞLİ TANE BİLYA | NEEDLE ROLLER | D5X36,8 | (B)(C) | ♦ | ♦ | ♦ | ♦ |
| | | | (001 981 2987) | | | | | | | | | |
| 8 | K21.04074 | 389 262 0162 | (389 262 6462) | 10 | HEYKEL KOZA DİŞLİ PULU | THRUST WASHER | | | ♦ | ♦ | ♦ | ♦ |
| | | | (389 262 0562) | | | | | | | | | |
| 9 | K21.04075 | 945 262 1162 | (945 262 0162) | 10 | HEYKEL KOZA DİŞLİ PULU | THRUST WASHER | | (A) | ♦ | ♦ | ♦ | ♦ |
| | | | (389 262 1462) | | | | | | | | | |
| 9 | K21.06982 | 389 262 0262 | | 10 | HEYKEL KOZA DİŞLİ PULU | THRUST WASHER | | (B) | ♦ | ♦ | ♦ | ♦ |
| 10 | K21.03418 | 000914 006109 | | 5 | HEYKEL KOZA DİŞLİ VİDASI | THREADED PIN | M6X14 | | ♦ | ♦ | ♦ | ♦ |
| 11 | K21.03125 | 389 260 9061 | (389 260 8961) | 1 | ŞANZIMAN HEYKELİ (BOŞ) | PLANETARY CARRIER (EMPTY) | | (A) | ♦ | ♦ | ♦ | ♦ |
| | | | (389 260 7661) | | | | | | | | | |
| | | | (389 260 1361) | | | | | | | | | |
| 11 | K21.03360 | 389 260 0661 | | 1 | ŞANZIMAN HEYKELİ (BOŞ) | PLANETARY CARRIER (EMPTY) | | (B)(C) | ♦ | ♦ | ♦ | ♦ |
| 12 | K21.03682 | | | Kit | ŞANZIMAN HEYKELİ (DOLU) | PLANETARY CARRIER (FULL) | | (A) | ♦ | ♦ | ♦ | ♦ |
| 13 | K21.06864 | 000472 130000 | | 1 | ÇEMBER DİŞLİ BİLYA SEKMANI | RETAINING RING | 130X4mm | | ♦ | ♦ | ♦ | ♦ |
| 14 | K21.03614 | 008 981 1325 | (004 981 8725) | 1 | ÇEMBER DİŞLİ BİLYASI | ROLLER BEARING | 90X130X14mm | | ♦ | ♦ | ♦ | ♦ |
| | | | (004 981 8825) | | | | | | | | | |
| | | | (004 981 9425) | | | | | | | | | |
| 15 | K21.03425 | 389 262 0208 | | 1 | ÇEMBER DİŞLİ 80 DİŞ | RING GEAR 80 T. | | | ♦ | ♦ | ♦ | ♦ |
| 16 | K21.04076 | 389 262 0251 | | 1 | ŞANZIMAN HEYKELİ ARA PULU | SPACER RING | | | ♦ | ♦ | ♦ | ♦ |
| 17 | K21.03018 | 389 260 2036 | | 1 | TABLA SENKROMENÇ | FOLLOWER RING | | (1) | ♦ | ♦ | ♦ | ♦ |
| 17 | K21.03076 | 389 260 0936 | | 1 | TABLA SENKROMENÇ | FOLLOWER RING | | (2) | ♦ | ♦ | ♦ | ♦ |
| 18 | K21.03017 | 389 262 0537 | (389 262 0037) | 2 | AĞIR SERİ FRENLEME (Mo) | SYNCHRONIZING CONE / Mo | | | ♦ | ♦ | ♦ | ♦ |
| | | | (389 262 0137) | | | | | | | | | |
| | | | (389 262 3337) | | | | | | | | | |
| 18 | K21.03078 | 945 260 0850 | | 2 | AĞIR SERİ FRENLEME (C) | SYNCHRONIZING CONE / C | | | ♦ | ♦ | ♦ | ♦ |
| 19 | K21.03077 | 389 262 0293 | | 2 | FRENLEME TELİ | SPRING | | | ♦ | ♦ | ♦ | ♦ |
| 20 | K21.03079 | 389 262 4935 | (389 262 2035) | 1 | AĞIR SERİ YILDIZ DİŞLİ 73 DİŞ | SYNCHRONIZER HUB 73 T. | | (1) | ♦ | ♦ | ♦ | ♦ |
| | | | (400 262 0335) | | | | | | | | | |
| 20 | K21.03081 | 389 262 0535 | | 1 | AĞIR SERİ YILDIZ DİŞLİ 72 DİŞ | SYNCHRONIZER HUB 72 T. | | (2) | ♦ | ♦ | ♦ | ♦ |
| 21 | K21.04356 | 000471 120000 | | 1 | AĞIR SERİ YILDIZ DİŞLİ SEKMANI | RETAINING RING | | | ♦ | ♦ | ♦ | ♦ |
| 22 | K21.03028 | 945 262 6623 | (945 262 0823) | 1 | AĞIR SERİ HALKA 73 DİŞ | ENGAGING SLEEVE 73 T. | | (1) | ♦ | ♦ | ♦ | ♦ |
| | | | (389 262 1623) | | | | | | | | | |
| | | | (389 262 3823) | | | | | | | | | |
| | | | (945 262 2623) | | | | | | | | | |
| 22 | K21.03420 | 389 262 1523 | (389 262 0123) | 1 | AĞIR SERİ HALKA 72 DİŞ | ENGAGING SLEEVE 72 T. | | (2) | ♦ | ♦ | ♦ | ♦ |
| 23 | K21.03406 | 389 265 2449 | (945 265 0349) | 2 | AĞIR SERİ HİLAL PABUCU | SLIDING PAD | | | ♦ | ♦ | ♦ | ♦ |
| | | | (387 265 0049) | | | | | | | | | |
| | | | (389 265 0949) | | | | | | | | | |
| | | | (389 265 1249) | | | | | | | | | |
| 24 | K21.06411 | 947 265 1701 | (389 265 0901) | 1 | AĞIR SERİ HİLALİ | SHIFTING FORK | | | ♦ | ♦ | ♦ | ♦ |
| | | | (930 265 0001) | | | | | | | | | |
| | | | (947 265 0801) | | | | | | | | | |

NOTES :
Parts encoded alphabetic and numaric are used together.

NOTLAR :
Alfabetik ve rakam ile kodlanan parçalar birlikte kullanılır.





Original parts names, oem numbers, symbols and descriptions used in this catalogue are for reference purposes only.

# GEARBOX G 155 - 16 , G 180 - 16 / 11,9 - 14,0

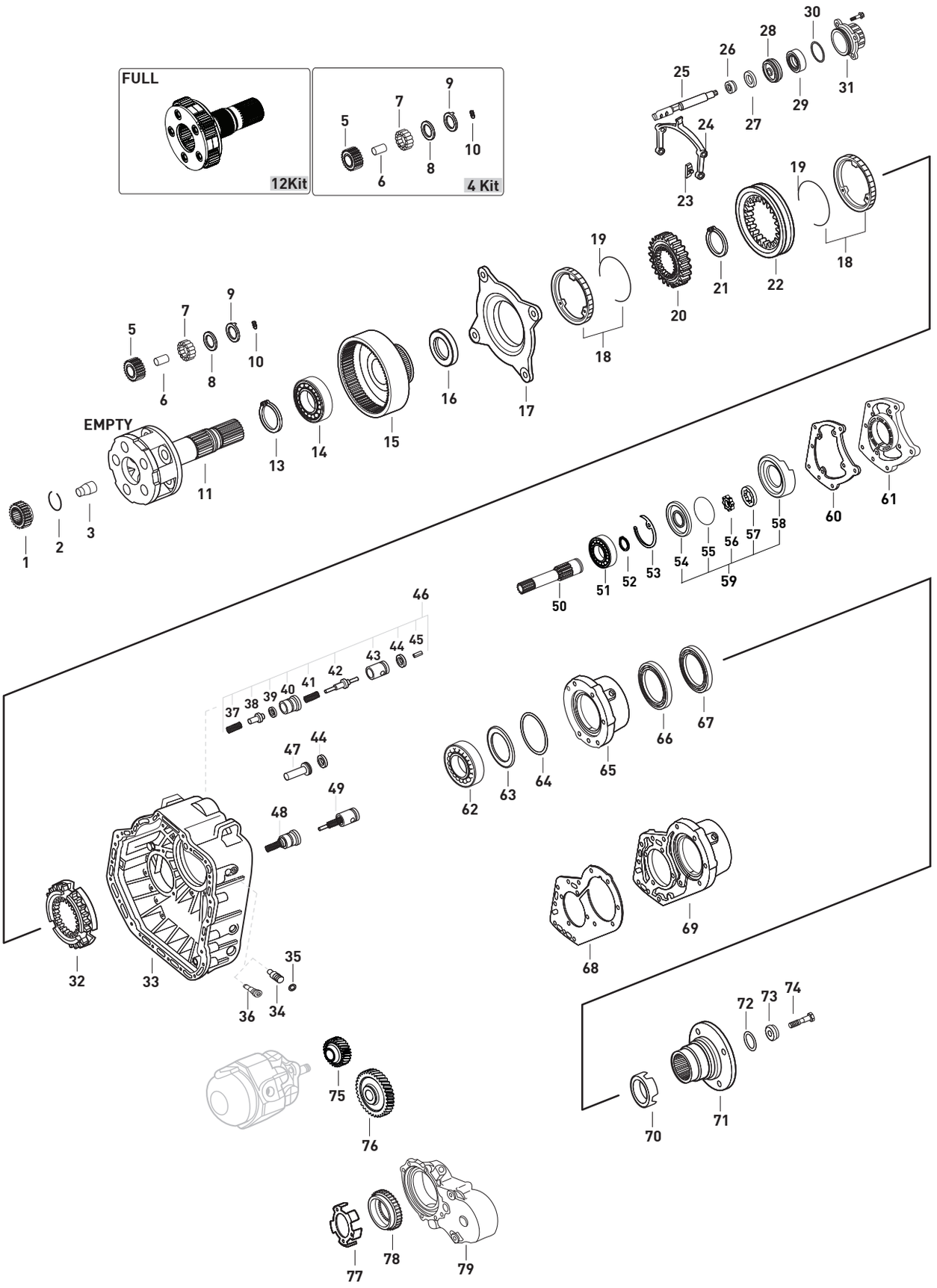




Original parts names, oem numbers, symbols and descriptions used in this catalogue are for reference purposes only.

| Fig. | Kacmaz No | Oem No | Oem Old No | Pcs. | Ürün Tanımı | Description | Sizes | Not | G155-16/11,9 | G155-16/14,0 | G180-16/11,9 | G180-16/14,0 |
|---|---|---|---|---|---|---|---|---|---|---|---|---|
| 25 | | 389 267 7217 | (389 267 3917) | 1 | AĞIR SERİ HİLALİ MİLİ | SHIFTING ROD | | MPS | ♦ | ♦ | ♦ | ♦ |
| 25 | | 389 267 3417 | | 1 | AĞIR SERİ HİLALİ MİLİ | SHIFTING ROD | | EPS | ♦ | ♦ | ♦ | ♦ |
| 26 | K21.03523 | 000 267 0197 | (000 267 0397) | 1 | AĞIR SERİ HİLAL MİL KEÇESİ | OIL SEAL | 22X32X8mm | | ♦ | ♦ | ♦ | ♦ |
| 27 | K21.04178 | 387 267 0650 | (387 267 0250) | 1 | HİLAL MİL BURCU | BUSHING | 34X22X8mm | | ♦ | ♦ | ♦ | ♦ |
| 28 | K21.06975 | 960 267 0818 | (389 267 1018) | 1 | AĞIR SERİ HİLAL MİL PİSTONU | PISTON | | | ♦ | ♦ | ♦ | ♦ |
| | | | (389 267 0118) | | | | | | | | | |
| 29 | K21.03525 | 024 997 8347 | (020 997 6747) | 1 | AĞIR SERİ SİLİNDİR KEÇESİ | SEAL RING | 77X90X17mm | | ♦ | ♦ | ♦ | ♦ |
| | | | (014 997 3647) | | | | | | | | | |
| | | | (014 997 5147) | | | | | | | | | |
| 30 | K21.06399 | 013 997 7548 | | 1 | AĞIR SERİ SİLİNDİR ORİNGİ | O-RING | 89,5X3mm | | ♦ | ♦ | ♦ | ♦ |
| 31 | K21.06469 | 389 267 1419 | | 1 | AĞIR SERİ SİLİNDİRİ | SHIFTING CYLINDER | | | ♦ | ♦ | ♦ | ♦ |
| 32 | K21.03022 | 389 262 9134 | | 1 | SERİ SENKROMENÇ | ENGAGING RING | | (1) | ♦ | ♦ | ♦ | ♦ |
| 32 | K21.03020 | 389 262 4034 | | 1 | SERİ SENKROMENÇ | ENGAGING RING | | (2) | ♦ | ♦ | ♦ | ♦ |
| 32 | K21.03082 | 389 262 2334 | (389 262 1934) | 1 | SERİ SENKROMENÇ | ENGAGING RING | | (2) | ♦ | ♦ | ♦ | ♦ |
| | | | (389 262 0934) | | | | | | | | | |
| 33 | | 389 261 5126 | (389 261 4926) | 1 | ŞANZIMAN ARKA GÖVDE | HOUSING | | (1) | ♦ | ♦ | ♦ | ♦ |
| 33 | | 389 261 4603 | (389 261 2703) | 1 | ŞANZIMAN ARKA GÖVDE | HOUSING | | (2) | ♦ | ♦ | ♦ | ♦ |
| 34 | | 389 265 0974 | | 2 | AĞIR SERİ HİLAL CİVATASI | SCREW | | (2) | ♦ | ♦ | ♦ | ♦ |
| 35 | K21.04212 | 013 997 0048 | (020 997 8248) | 2 | HİLAL CİVATA ORİNGİ | O-RING | 19,2X3mm | (2) | ♦ | ♦ | ♦ | ♦ |
| 36 | K21.06026 | 945 265 3074 | (945 265 1474) | 2 | AĞIR SERİ HİLAL CİVATASI | PIN | | (1) | ♦ | ♦ | ♦ | ♦ |
| | | | (945 265 1774) | | | | | | | | | |
| | | | (945 265 2674) | | | | | | | | | |
| 37 | | 389 993 5301 | | 1 | YAĞ BASINÇ YAYI | SPRING | | | ♦ | ♦ | ♦ | ♦ |
| 38 | | 389 269 1026 | (389 269 0926) | 1 | YAĞ BASINÇ VALFİ | SELECTOR VALVE | | | ♦ | ♦ | ♦ | ♦ |
| 39 | K21.04210 | 013 997 0148 | (020 997 8348) | 1 | YAĞ BASINÇ ORİNGİ | O-RING | 13,3X2,4mm | | ♦ | ♦ | ♦ | ♦ |
| 40 | | 389 269 1444 | (389 269 0744) | 1 | YAĞ BASINÇ VALF GÖVDESİ | VALVE INSERT | | | ♦ | ♦ | ♦ | ♦ |
| 41 | | 389 993 4401 | | 1 | YAĞ BASINÇ VALF MİL YAYI | SPRING | 11,5X41,9X1mm | | ♦ | ♦ | ♦ | ♦ |
| 42 | | 389 269 0826 | | 1 | YAĞ BASINÇ VALF MİLİ | SELECTOR VALVE | | | ♦ | ♦ | ♦ | ♦ |
| 43 | | 389 269 0844 | | 1 | YAĞ BASINÇ VALF TOPU | BUSH | | | ♦ | ♦ | ♦ | ♦ |
| 44 | K21.04212 | 013 997 0048 | (020 997 8248) | 1 | YAĞ BASINÇ VALF ORİNGİ | O-RING | 19,2X3mm | | ♦ | ♦ | ♦ | ♦ |
| 45 | | 001481 004049 | (001481 004001) | 1 | EMNİYET PİMİ | CLAMPING SLEEVE | | | ♦ | ♦ | ♦ | ♦ |
| 46 | K21.06962 | 655 260 0157 | | Kit | YAĞ BASINÇ VALFİ KOMPLE | VALVE KIT | | | ♦ | ♦ | ♦ | ♦ |
| 47 | K21.06979 | 389 265 0176 | (389 265 0076) | 1 | YAĞ BASINÇ VALFİ ALIN FİBERİ | WASHER | | | ♦ | ♦ | ♦ | ♦ |
| 48 | K21.06953 | 960 260 1057 | | Kit | YAĞ BASINÇ VALFİ KOMPLE | VALVE KIT | | | ♦ | ♦ | ♦ | ♦ |
| 49 | K21.06973 | 960 260 1257 | | Kit | YAĞ BASINÇ VALFİ KOMPLE | VALVE KIT | | | ♦ | ♦ | ♦ | ♦ |
| 50 | K21.03085 | 947 264 0005 | (389 269 0310) | 1 | YAĞ POMPA MİLİ | OIL PUMP SHAFT | | | ♦ | ♦ | ♦ | ♦ |
| | | | (389 269 1210) | | | | | | | | | |
| 51 | K21.03613 | 004 981 9225 | (004 981 8625) | 1 | PTO MİL BİLYASI | ROLLER BEARING | 45X75X16mm | | ♦ | ♦ | ♦ | ♦ |
| | | | (004 981 9025) | | | | | | | | | |
| 52 | K21.06964 | 000471 045000 | (003 994 3741) | 1 | PTO MİL BİLYA SEKMANI | RETAINING RING | 1,75mm | | ♦ | ♦ | ♦ | ♦ |
| 53 | K21.94304 | | | 1 | YAĞ POMPA PULU | SPACER WASHER | 0,70mm | | ♦ | ♦ | ♦ | ♦ |
| 53 | K21.04304 | 389 262 6254 | | 1 | YAĞ POMPA PULU | SPACER WASHER | 0,80mm | | ♦ | ♦ | ♦ | ♦ |
| 53 | K21.04303 | 389 262 5954 | | 1 | YAĞ POMPA PULU | SPACER WASHER | 0,90mm | | ♦ | ♦ | ♦ | ♦ |
| 53 | K21.04302 | 389 262 5754 | | 1 | YAĞ POMPA PULU | SPACER WASHER | 1,00mm | | ♦ | ♦ | ♦ | ♦ |
| 53 | K21.04301 | 389 262 5554 | | 1 | YAĞ POMPA PULU | SPACER WASHER | 1,10mm | | ♦ | ♦ | ♦ | ♦ |
| 53 | K21.04305 | 389 262 5354 | | 1 | YAĞ POMPA PULU | SPACER WASHER | 1,20mm | | ♦ | ♦ | ♦ | ♦ |
| 54 | K21.03412 | 945 269 0201 | (389 269 2501) | 1 | YAĞ POMPA KAPAĞI | OIL PUMP COVER | | | ♦ | ♦ | ♦ | ♦ |
| 55 | K21.03511 | 029 997 5748 | | 1 | YAĞ POMPA KAPAK ORİNGİ | O-RING | 112X2,5mm | | ♦ | ♦ | ♦ | ♦ |
| 56 | K21.03413 | 389 269 1406 | (389 269 1506) | 1 | YAĞ POMPA İÇ ROTOR | OIL PUMP GEAR | | | ♦ | ♦ | ♦ | ♦ |
| | | | (945 260 0090) | | | | | | | | | |
| 57 | K21.03414 | 389 269 0706 | (389 269 1206) | 1 | YAĞ POMPA DIŞ ROTOR | ROTOR | | | ♦ | ♦ | ♦ | ♦ |
| 58 | K21.03415 | 389 269 3801 | | 1 | YAĞ POMPA GÖVDESİ | OIL PUMP HOUSING | | | ♦ | ♦ | ♦ | ♦ |
| 59 | K21.03411 | 389 260 0690 | (389 260 0590) | 1 | YAĞ POMPASI | OIL PUMP | | | ♦ | ♦ | ♦ | ♦ |

NOTES :
Parts encoded alphabetic and numaric are used together.

NOTLAR :
Alfabetik ve rakam ile kodlanan parçalar birlikte kullanılır.





Original parts names, oem numbers, symbols and descriptions used in this catalogue are for reference purposes only.

# GEARBOX G 155 - 16 , G 180 - 16 / 11,9 - 14,0

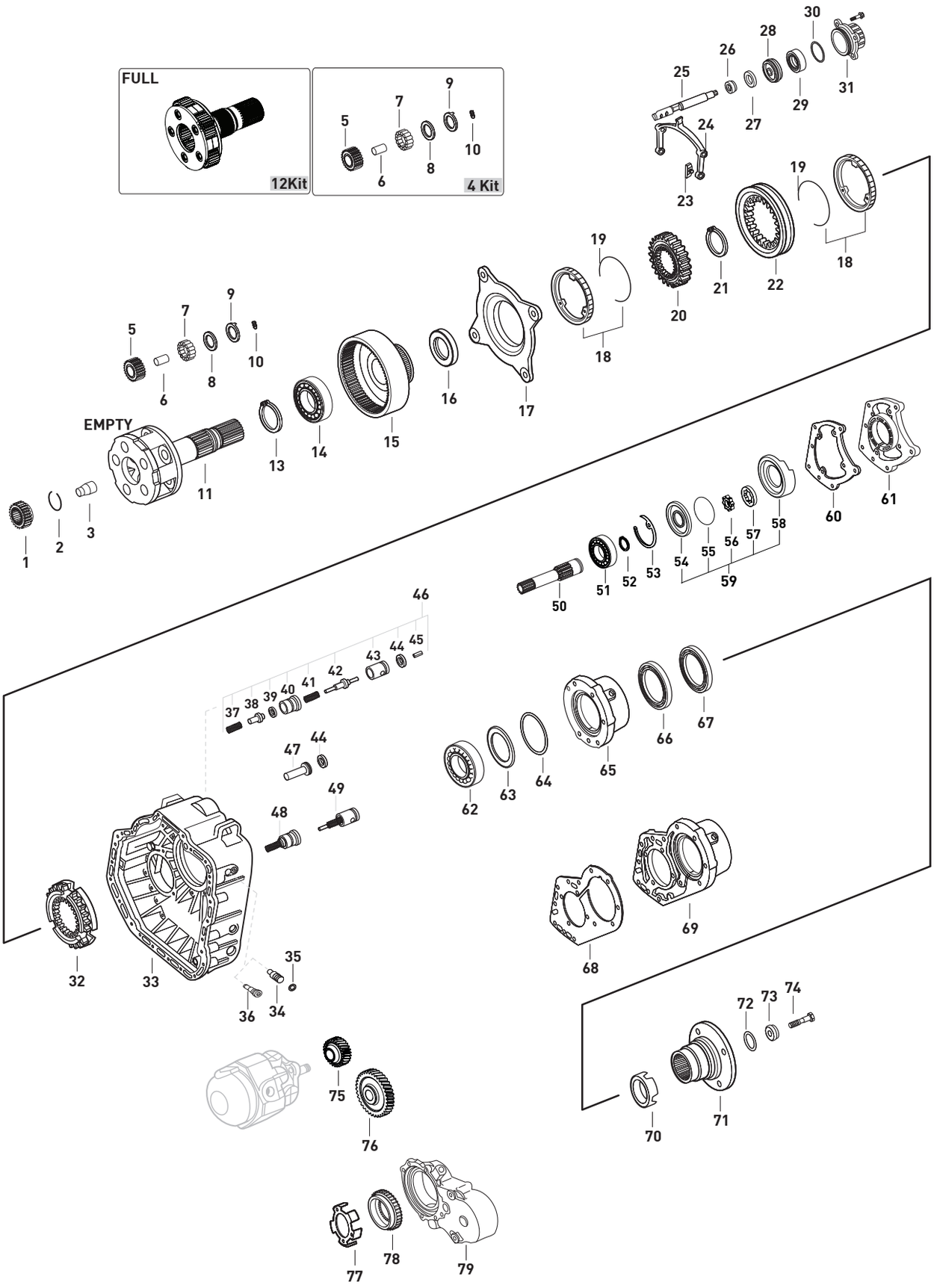




Original parts names, oem numbers, symbols and descriptions used in this catalogue are for reference purposes only.

| Fig. | Kacmaz No | Oem No | Oem Old No | Pcs. | Ürün Tanımı | Description | Sizes | Not | G155-16/11,9 | G155-16/14,0 | G180-16/11,9 | G180-16/14,0 |
|---|---|---|---|---|---|---|---|---|---|---|---|---|
| 60 | K21.06587 | 389 261 1980 | (389 261 1480) | 1 | PTO KAPAK CONTASI | GASKET | | | ♦ | ♦ | ♦ | ♦ |
| 60 | | 389 261 1280 | (389 261 0380) | 1 | PTO KAPAK CONTASI | GASKET | | | ♦ | ♦ | ♦ | ♦ |
| 60 | K21.03667 | 945 261 0680 | (945 261 0580) | 1 | PTO KAPAK CONTASI | GASKET | | | ♦ | ♦ | ♦ | ♦ |
| | | | (945 261 0080) | | | | | | | | | |
| 61 | K21.06260 | 389 261 2433 | (389 261 2333) | 1 | PTO KAPAĞI | COVER | | | ♦ | ♦ | ♦ | ♦ |
| | | | (389 261 0933) | | | | | | | | | |
| 61 | | 389 261 0433 | | 1 | PTO KAPAĞI | COVER | | | ♦ | ♦ | ♦ | ♦ |
| 62 | K21.03617 | 004 981 9325 | (004 981 8925) | 1 | ŞANZIMAN ARKA BİLYA | ROLLER BEARING | 85X150X28mm | | ♦ | ♦ | ♦ | ♦ |
| | | | (004 981 8525) | | | | | | | | | |
| 63 | K21.04077 | 389 262 3954 | | 1 | ŞANZIMAN HEYKEL AYAR PULU | THRUST WASHER | 3,50mm | | ♦ | ♦ | ♦ | ♦ |
| 64 | K21.04081 | 389 262 7754 | | 1 | ŞANZIMAN HEYKELİ AYAR PULU | THRUST WASHER | 1,40mm | | ♦ | ♦ | ♦ | ♦ |
| 64 | K21.04139 | 389 262 5152 | | 1 | ŞANZIMAN HEYKELİ AYAR PULU | THRUST WASHER | 0,80mm | | ♦ | ♦ | ♦ | ♦ |
| 64 | K21.04080 | 389 262 5052 | | 1 | ŞANZIMAN HEYKELİ AYAR PULU | THRUST WASHER | 0,40mm | | ♦ | ♦ | ♦ | ♦ |
| 64 | K21.04079 | 389 262 7654 | | 1 | ŞANZIMAN HEYKELİ AYAR PULU | THRUST WASHER | 0,25mm | | ♦ | ♦ | ♦ | ♦ |
| 64 | K21.04140 | 389 262 4952 | | 1 | ŞANZIMAN HEYKELİ AYAR PULU | THRUST WASHER | 0,20mm | | ♦ | ♦ | ♦ | ♦ |
| 64 | K21.04141 | 389 262 4852 | | 1 | ŞANZIMAN HEYKELİ AYAR PULU | THRUST WASHER | 0,15mm | | ♦ | ♦ | ♦ | ♦ |
| 64 | K21.04078 | 389 262 4752 | | 1 | ŞANZIMAN HEYKELİ AYAR PULU | THRUST WASHER | 0,10mm | | ♦ | ♦ | ♦ | ♦ |
| 65 | K21.06237 | 389 261 0420 | (389 261 0520) | 1 | ŞANZIMAN ARKA KAPAK | COVER | | | ♦ | ♦ | ♦ | ♦ |
| 66 | K21.03507 | 013 997 7347 | (015 997 4247) | 1 | ŞANZIMAN ARKA KEÇE | OIL SEAL | 95X115X13/12mm | | ♦ | ♦ | ♦ | ♦ |
| | | | (013 997 5647) | | | | | | | | | |
| 67 | K21.03528 | 013 997 7247 | (014 997 1947) | 1 | ŞANZIMAN ARKA KEÇE | OIL SEAL | 95X115X13mm | | ♦ | ♦ | ♦ | ♦ |
| | | | (013 997 5547) | | | | | | | | | |
| 68 | | 389 261 1180 | (389 261 0280) | 1 | ŞANZIMAN ARKA KAPAK CONTASI | GASKET | | (3) | ♦ | ♦ | ♦ | ♦ |
| 69 | | 389 261 0320 | (389 261 0220) | 1 | ŞANZIMAN ARKA KAPAK | COVER | | (3) | ♦ | ♦ | ♦ | ♦ |
| 70 | | 945 262 0528 | (389 260 0150) | 1 | ŞANZIMAN KM DEVİR SACI | PULSE STAR | | | ♦ | ♦ | ♦ | ♦ |
| 71 | K21.03084 | 389 262 0445 | | 1 | ŞANZIMAN FLANŞI | COMPANION FLANGE | 4-H, Ø180mm | | ♦ | ♦ | ♦ | ♦ |
| 72 | K21.04310 | 014 997 5148 | (020 997 8648) | 1 | ŞANZIMAN FLANŞ ORİNGİ | O-RING | 72,4X5,3mm | | ♦ | ♦ | ♦ | ♦ |
| 73 | K21.06977 | 389 262 0362 | (945 262 0062) | 1 | ŞANZIMAN FLANŞI ALIN PULU | THRUST WASHER | 95X24mm | | ♦ | ♦ | ♦ | ♦ |
| 74 | K21.06028 | 945 990 0019 | (389 990 2019) | 1 | ŞANZIMAN FLANŞI ALIN VİDASI | SCREW | M24X2X85 | | ♦ | ♦ | ♦ | ♦ |
| | | | (389 990 0219) | | | | | | | | | |
| 75 | K21.03672 | 387 264 2821 | | 1 | DİREKSİYON POMPA DİŞLİSİ | GEAR | | (4) | ♦ | ♦ | ♦ | ♦ |
| 76 | | 387 264 3021 | | 1 | DİREKSİYON POMPA DİŞLİ KARŞILIĞI | GEAR | | (4) | ♦ | ♦ | ♦ | ♦ |
| 76 | | 387 264 4721 | | 1 | DİR.POMPA DİŞLİ KARŞILIĞI | GEAR | | (4) | ♦ | ♦ | ♦ | ♦ |
| 77 | K21.04083 | 387 262 0828 | (387 262 0428) | 1 | ŞANZIMAN KM DEVİR SACI | PULSE STAR | | (4) | ♦ | ♦ | ♦ | ♦ |
| 78 | | 389 264 0021 | (945 264 0121) | 1 | ŞANZIMAN KM DİŞLİSİ 64 DİŞ | GEAR 64 T. | | (4) | ♦ | ♦ | ♦ | ♦ |
| 79 | K21.06279 | 389 261 1120 | | 1 | ŞANZIMAN ARKA KAPAK | COVER | | (4) | ♦ | ♦ | ♦ | ♦ |

NOTES :
Parts encoded alphabetic and numaric are used together.

NOTLAR :
Alfabetik ve rakam ile kodlanan parçalar birlikte kullanılır.





Original parts names, oem numbers, symbols and descriptions used in this catalogue are for reference purposes only.

SYNCHRONIZER KIT CONST.

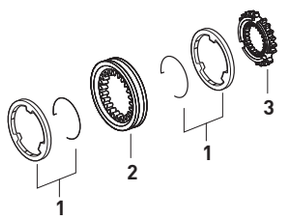


| Fig. | Kacmaz No. | Oem No | Oem Old No | Pcs. | Ürün Tanımı | Description |
|---|---|---|---|---|---|---|
| | K21.06190 | | | Kit | TAK.SENKROMENÇ KİT | SYNCHRONIZER KIT Const |
| 1 | K21.03015 | 389 262 0637 | (387 262 0837) | 2 | TAKVİYE FRENLEME (Mo) | SYNCHRONIZING CONE / Mo |
| 2 | K21.03011 | 389 262 3023 | (389 262 2223) | 1 | TAKVİYE HALKA | ENGAGING SLEEVE |
| | | | (389 262 0623) | | | |
| 3 | K21.03012 | 389 262 5634 | (389 262 3934) | 1 | TAKVİYE SENKROMENÇ | ENGAGING RING |

SYNCHRONIZER KIT 3rd/4th

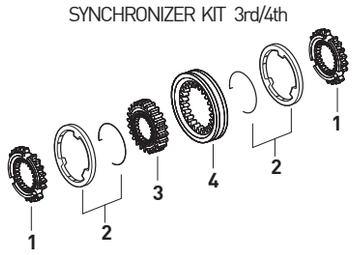


| Fig. | Kacmaz No. | Oem No | Oem Old No | Pcs. | Ürün Tanımı | Description |
|---|---|---|---|---|---|---|
| | K21.06207 | | | Kit | 3./4.VİTES SENK.KİT | SYNCH.KIT 3rd/4th |
| 1 | K21.03027 | 945 262 0534 | (389 262 5034) | 2 | 3./4.VİTES SENKROMENÇ | ENGAGING RING |
| 2 | K21.03016 | 389 262 0737 | (387 262 0937) | 2 | 3./4.VİT.FRENLEME (Mo) | SYNCHRONIZING CONE (Mo) |
| 3 | K21.03100 | 389 262 1535 | | 1 | 3./4.VİTES YILDIZ DİŞLİ | SYNCHRONIZER HUB |
| 4 | K21.03010 | 389 262 2923 | (389 262 0723) | 1 | 3./4.VİTES HALKA | ENGAGING SLEEVE |

SYNCHRONIZER KIT 3rd/4th

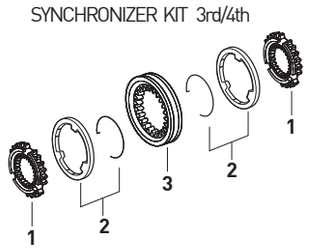


| Fig. | Kacmaz No. | Oem No | Oem Old No | Pcs. | Ürün Tanımı | Description |
|---|---|---|---|---|---|---|
| | K21.96207 | | | Kit | 3./4.VİTES SENK.KİT | SYNCH.KIT 3rd/4th |
| 1 | K21.03027 | 945 262 0534 | (389 262 5034) | 2 | 3./4.VİTES SENKROMENÇ | ENGAGING RING |
| 2 | K21.03016 | 389 262 0737 | (387 262 0937) | 2 | 3./4.VİT.FRENLEME (Mo) | SYNCHRONIZING CONE (Mo) |
| 3 | K21.03010 | 389 262 2923 | (389 262 0723) | 1 | 3./4.VİTES HALKA | ENGAGING SLEEVE |

SYNCHRONIZER KIT 3rd/4th

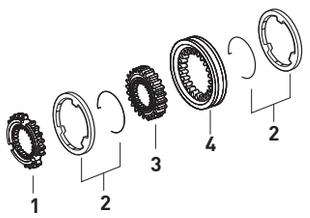


| Fig. | Kacmaz No. | Oem No | Oem Old No | Pcs. | Ürün Tanımı | Description |
|---|---|---|---|---|---|---|
| | K21.06191 | | | Kit | 3./4.VİTES SENK.KİT | SYNCH.KIT 3rd/4th |
| 1 | K21.03012 | 389 262 5634 | (389 262 3934) | 1 | 4.VİTES SENKROMENÇ | ENGAGING RING |
| 2 | K21.03015 | 389 262 0637 | (387 262 0837) | 2 | 3./4.VİT.FRENLEME (Mo) | SYNCHRONIZING CONE / Mo |
| 3 | K21.03399 | 389 262 0635 | | 1 | 3./4.VİTES YILDIZ DİŞLİ | SYNCHRONIZER HUB |
| 4 | K21.03011 | 389 262 3023 | (389 262 2223) | 1 | 3./4.VİTES HALKA | ENGAGING SLEEVE |
| | | | (389 262 0623) | | | |

SYNCHRONIZER KIT 1st/2nd

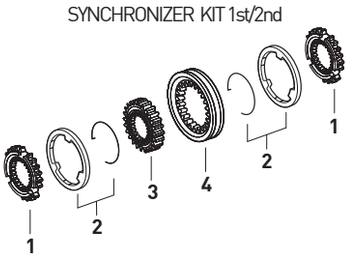


| Fig. | Kacmaz No. | Oem No | Oem Old No | Pcs. | Ürün Tanımı | Description |
|---|---|---|---|---|---|---|
| | K21.06192 | | | Kit | 1./2.VİTES SENK.KİT | SYNCH.KIT 1st/2nd |
| 1 | K21.03025 | 945 262 0434 | (389 262 0034) | 2 | 1./2.VİTES SENKROMENÇ | ENGAGING RING |
| 2 | K21.03016 | 389 262 0737 | (387 262 0937) | 2 | 1./2.VİT.FRENLEME (Mo) | SYNCHRONIZING CONE / Mo |
| 3 | K21.03056 | 389 262 0035 | | 1 | 1./2.VİTES YILDIZ DİŞLİ | SYNCHRONIZER HUB |
| 4 | K21.03010 | 389 262 2923 | (389 262 0723) | 1 | 1./2.VİTES HALKA | ENGAGING SLEEVE |

SYNCHRONIZER KIT 1st/2nd

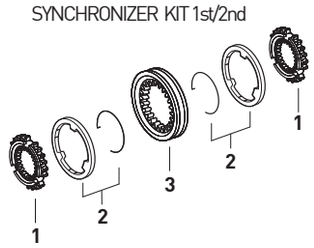


| Fig. | Kacmaz No. | Oem No | Oem Old No | Pcs. | Ürün Tanımı | Description |
|---|---|---|---|---|---|---|
| | K21.96192 | | | Kit | 1./2.VİTES SENK.KİT | SYNCH.KIT 1st/2nd |
| 1 | K21.03025 | 945 262 0434 | (389 262 0034) | 2 | 1./2.VİTES SENKROMENÇ | ENGAGING RING |
| 2 | K21.03016 | 389 262 0737 | (387 262 0937) | 2 | 1./2.VİT.FRENLEME (Mo) | SYNCHRONIZING CONE / Mo |
| 3 | K21.03010 | 389 262 2923 | (389 262 0723) | 1 | 1./2.VİTES HALKA | ENGAGING SLEEVE |



**Original parts names, oem numbers, symbols and descriptions used in this catalogue are for reference purposes only.**

| Fig. | Kacmaz No. | Oem No | Oem Old No | Pcs. | Ürün Tanımı | Description |
|---|---|---|---|---|---|---|
| | K21.06193 | | | Kit | AĞIR SERİ.SENK.KİT | SYNCH.KIT PLANETARY |
| 1 | K21.03018 | 389 260 2036 | | 1 | TABLA SENKROMENÇ | FOLLOWER RING |
| 2 | K21.03017 | 389 262 0537 | (389 262 0037) | 2 | AĞIR SERİ FRENLEME (Mo) | SYNCHRONIZING CONE / Mo |
| 3 | K21.03079 | 389 262 4935 | (389 262 2035) | 1 | A.SERİ YILDIZ DİŞLİ 73 DİŞ | SYNCHRONIZER HUB 73 T. |
| 4 | K21.03028 | 945 262 6623 | (945 262 0823) | 1 | AĞIR SERİ HALKA 73 DİŞ | ENGAGING SLEEVE 73 T. |
| | | | (389 262 1623) | | | |
| | | | (389 262 3823) | | | |
| 5 | K21.03406 | 389 265 2449 | (389 265 1249) | 2 | A.SERİ HİLAL PABUCU | SLIDING PAD |
| 6 | K21.03022 | 389 262 9134 | | 1 | SERİ SENKROMENÇ | ENGAGING RING |

SYNCHRONIZER KIT PLANETARY

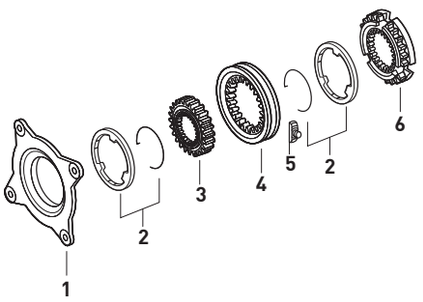


| Fig. | Kacmaz No. | Oem No | Oem Old No | Pcs. | Ürün Tanımı | Description |
|---|---|---|---|---|---|---|
| | K21.06435 | | | Kit | AĞIR SERİ.SENK.KİT | SYNCH.KIT PLANETARY |
| 1 | K21.03018 | 389 260 2036 | | 1 | TABLA SENKROMENÇ | FOLLOWER RING |
| 2 | K21.03017 | 389 262 0537 | (389 262 0037) | 2 | AĞIR SERİ FRENLEME (Mo) | SYNCHRONIZING CONE / Mo |
| 3 | K21.03028 | 945 262 6623 | (945 262 0823) | 1 | AĞIR SERİ HALKA 73 DİŞ | ENGAGING SLEEVE 73 T. |
| | | | (389 262 1623) | | | |
| | | | (389 262 3823) | | | |
| 4 | K21.03406 | 389 265 2449 | (389 265 1249) | 2 | A.SERİ HİLAL PABUCU | SLIDING PAD |
| 5 | K21.03022 | 389 262 9134 | | 1 | SERİ SENKROMENÇ | ENGAGING RING |

SYNCHRONIZER KIT PLANETARY

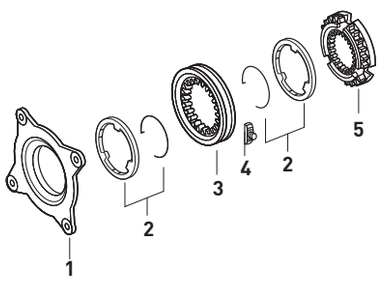


| Fig. | Kacmaz No. | Oem No | Oem Old No | Pcs. | Ürün Tanımı | Description |
|---|---|---|---|---|---|---|
| | K21.06194 | | | Kit | AĞIR SERİ.SENK.KİT | SYNCH.KIT PLANETARY |
| 1 | K21.03017 | 389 262 0537 | (389 262 0037) | 2 | AĞIR SERİ FRENLEME (Mo) | SYNCHRONIZING CONE / Mo |
| 2 | K21.03079 | 389 262 4935 | (389 262 2035) | 1 | A.SERİ YILDIZ DİŞLİ 73 DİŞ | SYNCHRONIZER HUB 73 T. |
| 3 | K21.03028 | 945 262 6623 | (945 262 0823) | 1 | AĞIR SERİ HALKA 73 DİŞ | ENGAGING SLEEVE 73 T. |
| | | | (389 262 1623) | | | |
| | | | (389 262 3823) | | | |
| 4 | K21.03406 | 389 265 2449 | (389 265 1249) | 2 | A.SERİ HİLAL PABUCU | SLIDING PAD |

SYNCHRONIZER KIT PLANETARY

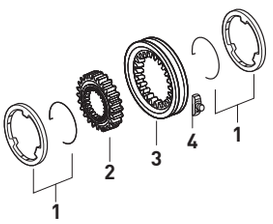


| Fig. | Kacmaz No. | Oem No | Oem Old No | Pcs. | Ürün Tanımı | Description |
|---|---|---|---|---|---|---|
| | K21.06195 | | | Kit | AĞIR SERİ.SENK.KİT | SYNCH.KIT PLANETARY |
| 1 | K21.03018 | 389 260 2036 | | 1 | TABLA SENKROMENÇ | FOLLOWER RING |
| 2 | K21.03017 | 389 262 0537 | (389 262 0037) | 2 | AĞIR SERİ FRENLEME (Mo) | SYNCHRONIZING CONE / Mo |
| 3 | K21.03079 | 389 262 4935 | (389 262 2035) | 1 | A.SERİ YILDIZ DİŞLİ 73 DİŞ | SYNCHRONIZER HUB 73 T. |
| 4 | K21.03028 | 945 262 6623 | (945 262 0823) | 1 | AĞIR SERİ HALKA 73 DİŞ | ENGAGING SLEEVE 73 T. |
| | | | (389 262 1623) | | | |
| | | | (389 262 3823) | | | |
| 5 | K21.03406 | 389 265 2449 | (389 265 1249) | 2 | A.SERİ HİLAL PABUCU | SLIDING PAD |
| 6 | K21.03020 | 389 262 4034 | | 1 | SERİ SENKROMENÇ | ENGAGING RING |

SYNCHRONIZER KIT PLANETARY

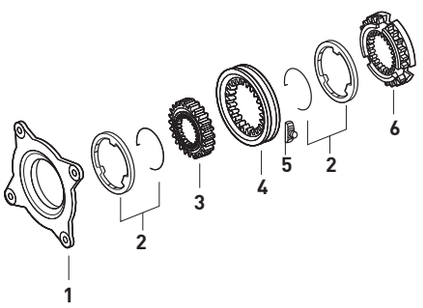


| Fig. | Kacmaz No. | Oem No | Oem Old No | Pcs. | Ürün Tanımı | Description |
|---|---|---|---|---|---|---|
| | K21.06434 | | | Kit | AĞIR SERİ.SENK.KİT | SYNCH.KIT PLANETARY |
| 1 | K21.03018 | 389 260 2036 | | 1 | TABLA SENKROMENÇ | FOLLOWER RING |
| 2 | K21.03017 | 389 262 0537 | (389 262 0037) | 2 | AĞIR SERİ FRENLEME (Mo) | SYNCHRONIZING CONE / Mo |
| 3 | K21.03028 | 945 262 6623 | (945 262 0823) | 1 | AĞIR SERİ HALKA 73 DİŞ | ENGAGING SLEEVE 73 T. |
| | | | (389 262 1623) | | | |
| | | | (389 262 3823) | | | |
| 4 | K21.03406 | 389 265 2449 | (389 265 1249) | 2 | A.SERİ HİLAL PABUCU | SLIDING PAD |
| 5 | K21.03020 | 389 262 4034 | | 1 | SERİ SENKROMENÇ | ENGAGING RING |

SYNCHRONIZER KIT PLANETARY

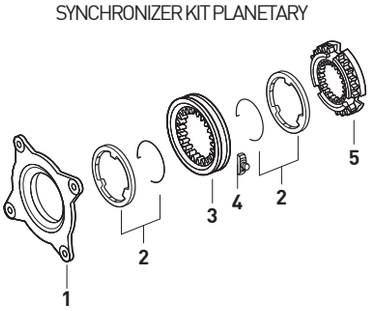




Original parts names, oem numbers, symbols and descriptions used in this catalogue are for reference purposes only.

SYNCHRONIZER KIT PLANETARY

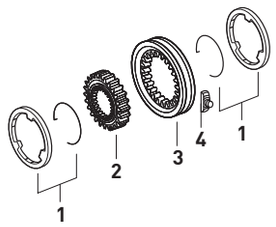


| Fig. | Kacmaz No. | Oem No | Oem Old No | Pcs. | Ürün Tanımı | Description |
|---|---|---|---|---|---|---|
| | K21.06196 | | | Kit | AĞIR SERİ.SENK.KİT | SYNCH.KIT PLANETARY |
| 1 | K21.03017 | 389 262 0537 | (389 262 0037) | 2 | AĞIR SERİ FRENLEME (Mo) | SYNCHRONIZING CONE / Mo |
| 2 | K21.03081 | 389 262 0535 | | 1 | A.SERİ YILDIZ DİŞLİ 72 DİŞ | SYNCHRONIZER HUB 72 T. |
| 3 | K21.03420 | 389 262 1523 | (389 262 0123) | 1 | AĞIR SERİ HALKA 72 DİŞ | ENGAGING SLEEVE 72 T. |
| 4 | K21.03406 | 389 265 2449 | (389 265 1249) | 2 | A.SERİ HİLAL PABUCU | SLIDING PAD |

SYNCHRONIZER KIT PLANETARY

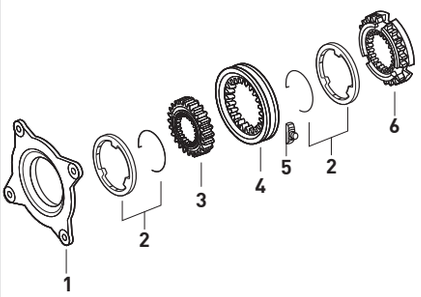


| Fig. | Kacmaz No. | Oem No | Oem Old No | Pcs. | Ürün Tanımı | Description |
|---|---|---|---|---|---|---|
| | K21.06197 | | | Kit | AĞIR SERİ.SENK.KİT | SYNCH.KIT PLANETARY |
| 1 | K21.03076 | 389 260 0936 | | 1 | TABLA SENKROMENÇ | FOLLOWER RING |
| 2 | K21.03017 | 389 262 0537 | (389 262 0037) | 2 | AĞIR SERİ FRENLEME (Mo) | SYNCHRONIZING CONE / Mo |
| 3 | K21.03081 | 389 262 0535 | | 1 | A.SERİ YILDIZ DİŞLİ 72 DİŞ | SYNCHRONIZER HUB 72 T. |
| 4 | K21.03420 | 389 262 1523 | (389 262 0123) | 1 | AĞIR SERİ HALKA 72 DİŞ | ENGAGING SLEEVE 72 T. |
| 5 | K21.03406 | 389 265 2449 | (389 265 1249) | 2 | A.SERİ HİLAL PABUCU | SLIDING PAD |
| 6 | K21.03082 | 389 262 2334 | (389 262 1934) | 1 | SERİ SENKROMENÇ | ENGAGING RING |

SYNCHRONIZER KIT PLANETARY

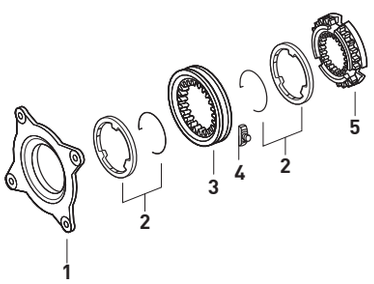


| Fig. | Kacmaz No. | Oem No | Oem Old No | Pcs. | Ürün Tanımı | Description |
|---|---|---|---|---|---|---|
| | K21.06436 | | | Kit | AĞIR SERİ.SENK.KİT | SYNCH.KIT PLANETARY |
| 1 | K21.03076 | 389 260 0936 | | 1 | TABLA SENKROMENÇ | FOLLOWER RING |
| 2 | K21.03017 | 389 262 0537 | (389 262 0037) | 2 | AĞIR SERİ FRENLEME (Mo) | SYNCHRONIZING CONE / Mo |
| 3 | K21.03420 | 389 262 1523 | (389 262 0123) | 1 | AĞIR SERİ HALKA 72 DİŞ | ENGAGING SLEEVE 72 T. |
| 4 | K21.03406 | 389 265 2449 | (389 265 1249) | 2 | A.SERİ HİLAL PABUCU | SLIDING PAD |
| 5 | K21.03082 | 389 262 2334 | (389 262 1934) | 1 | SERİ SENKROMENÇ | ENGAGING RING |



**Original parts names, oem numbers, symbols and descriptions used in this catalogue are for reference purposes only.**

# NOTES / NOTLAR



Original parts names, oem numbers, symbols and descriptions used in this catalogue are for reference purposes only.

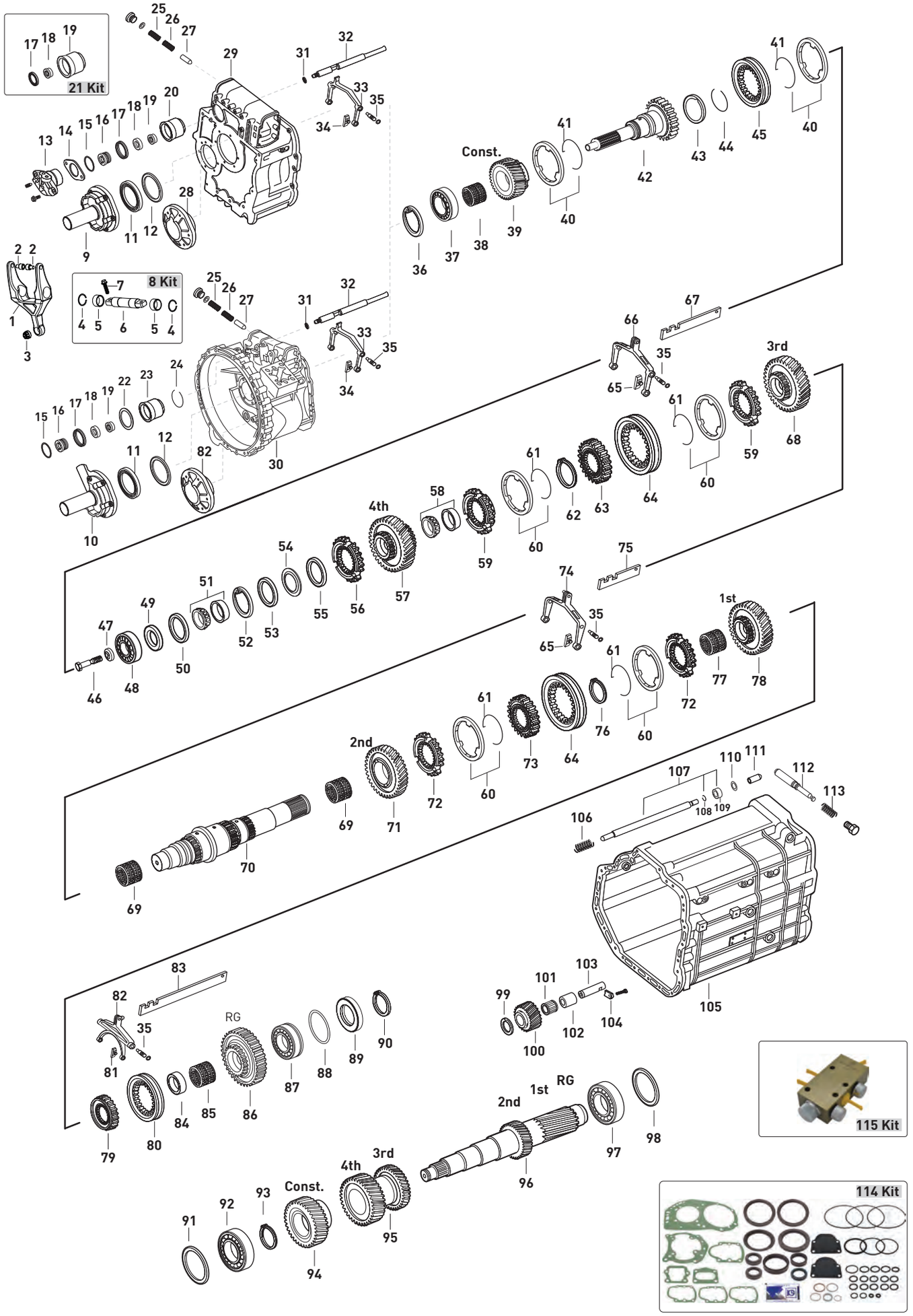




Original parts names, oem numbers, symbols and descriptions used in this catalogue are for reference purposes only.

| Fig. | Kacmaz No | Oem No | Oem Old No | Pcs. | Ürün Tanımı | Description | Sizes | Not | EPS | WSK400+RETARDER | | |
|---|---|---|---|---|---|---|---|---|---|---|---|---|
| 1 | | 650 250 3813 | | 1 | DEBRİYAJ ÇATALI | RELEASE FORK | | | ♦ | ♦ | | |
| 2 | K21.07038 | 000 254 0017 | | 2 | DEBRİYAJ ÇATAL BURÇ VE PİMİ | CAM ROLLER | | | ♦ | ♦ | | |
| 3 | K21.07040 | 000 254 0335 | | 1 | DEBRİYAJ ÇATAL PLASTİK BURCU | PLASTIC BUSHING | | | ♦ | ♦ | | |
| 4 | | 912009 037200 | | 4 | DEBRİYAJ ÇATAL MİL SEKMANI | RETAINING RING | | | ♦ | ♦ | | |
| 5 | | 001 992 8401 | | 2 | DEBRİYAJ ÇATAL MİL BURCU | BUSHING | | | ♦ | ♦ | | |
| 6 | | 650 254 0006 | | 1 | DEBRİYAJ ÇATAL MİLİ | SHAFT | | | ♦ | ♦ | | |
| 7 | | 914112 010025 | | 2 | DEBRİYAJ ÇATAL MİL VİDASI | SCREW | M10X45 | | ♦ | ♦ | | |
| 8 | K21.04309 | | | Kit | DEBRİYAJ ÇATALI TAMİR TAKIMI | RELEASE FORK REPAIR KIT | | | ♦ | ♦ | | |
| 9 | K21.03403 | 389 261 3318 | (389 261 1018) | 1 | PRİZDİREK KEÇE KAPAĞI | COVER | | | ♦ | | | |
| 10 | | 389 261 4918 | | 1 | PRİZDİREK KEÇE KAPAĞI | COVER | | | | ♦ | | |
| 10 | | 389 261 3718 | | 1 | PRİZDİREK KEÇE KAPAĞI | COVER | | | | ♦ | | |
| 11 | K21.03521 | 015 997 1647 | (015 997 0647) | 1 | PRİZDİREK ÖN KEÇE | OIL SEAL | 52X68X8mm | | ♦ | ♦ | | |
| | | | (024 997 2147) | | | | | | | | | |
| 12 | K21.04162 | 389 262 4152 | (389 262 0955) | 1 | PRİZDİREK AYAR RAYNELİ | THRUST WASHER | 0,10mm | | ♦ | ♦ | | |
| 12 | K21.04243 | 389 262 0855 | | 1 | PRİZDİREK AYAR RAYNELİ | THRUST WASHER | 0,15mm | | ♦ | ♦ | | |
| 12 | K21.04151 | 389 262 0755 | | 1 | PRİZDİREK AYAR RAYNELİ | THRUST WASHER | 0,20mm | | ♦ | ♦ | | |
| 12 | K21.06715 | 389 262 3055 | | 1 | PRİZDİREK AYAR RAYNELİ | THRUST WASHER | 0,25mm | | ♦ | ♦ | | |
| 12 | K21.04221 | 389 262 3255 | | 1 | PRİZDİREK AYAR RAYNELİ | THRUST WASHER | 0,31mm | | ♦ | ♦ | | |
| 12 | K21.04163 | 389 262 3555 | (389 262 0655) | 1 | PRİZDİREK AYAR RAYNELİ | THRUST WASHER | 0,40mm | | ♦ | ♦ | | |
| | | | (389 262 4452) | | | | | | | | | |
| 12 | K21.04164 | 389 262 3755 | (389 262 1954) | 1 | PRİZDİREK AYAR RAYNELİ | THRUST WASHER | 0,46mm | | ♦ | ♦ | | |
| 12 | K21.04246 | 389 262 3855 | | 1 | PRİZDİREK AYAR RAYNELİ | THRUST WASHER | 0,49mm | | ♦ | ♦ | | |
| 12 | K21.04250 | 389 262 4055 | (389 262 0155) | 1 | PRİZDİREK AYAR RAYNELİ | THRUST WASHER | 0,55mm | | ♦ | ♦ | | |
| | | | (389 262 2154) | | | | | | | | | |
| 12 | K21.04167 | 389 262 4255 | (389 262 2254) | 1 | PRİZDİREK AYAR RAYNELİ | THRUST WASHER | 0,61mm | | ♦ | ♦ | | |
| 12 | K21.04168 | 389 262 4355 | (389 262 2354) | 1 | PRİZDİREK AYAR RAYNELİ | THRUST WASHER | 0,64mm | | ♦ | ♦ | | |
| 12 | K21.04169 | 389 262 4555 | (389 262 2454) | 1 | PRİZDİREK AYAR RAYNELİ | THRUST WASHER | 0,70mm | | ♦ | ♦ | | |
| 12 | K21.04170 | 389 262 4755 | (389 262 2554) | 1 | PRİZDİREK AYAR RAYNELİ | THRUST WASHER | 0,76mm | | ♦ | ♦ | | |
| 12 | K21.04281 | 389 262 4855 | (389 262 0555) | 1 | PRİZDİREK AYAR RAYNELİ | THRUST WASHER | 0,79mm | | ♦ | ♦ | | |
| 12 | K21.04282 | 389 262 5555 | | 1 | PRİZDİREK AYAR RAYNELİ | THRUST WASHER | 1,00mm | | ♦ | ♦ | | |
| 12 | K21.04171 | 389 262 9654 | (389 262 2654) | 1 | PRİZDİREK AYAR RAYNELİ | THRUST WASHER | 2,00mm | | ♦ | ♦ | | |
| 13 | K21.06236 | 389 267 2819 | (389 267 2719) | 1 | TAKVİYE SİLİNDİR GÖVDE KAPAĞI | COVER | | | ♦ | | | |
| | | | (389 267 2419) | | | | | | | | | |
| | | | (389 267 2319) | | | | | | | | | |
| | | | (389 267 1519) | | | | | | | | | |
| 14 | K21.04158 | 387 263 3352 | | 1 | TAKVİYE SİLİNDİR PULU | SPACER WASHER | 0,20mm | | ♦ | ♦ | | |
| 14 | K21.04159 | 387 263 3452 | | 1 | TAKVİYE SİLİNDİR PULU | SPACER WASHER | 0,40mm | | ♦ | ♦ | | |
| 14 | K21.04179 | 387 263 3552 | | 1 | TAKVİYE SİLİNDİR PULU | SPACER WASHER | 0,60mm | | ♦ | ♦ | | |
| 14 | K21.04181 | 387 263 3652 | | 1 | TAKVİYE SİLİNDİR PULU | SPACER WASHER | 0,80mm | | ♦ | ♦ | | |
| 14 | K21.04180 | 387 263 3752 | | 1 | TAKVİYE SİLİNDİR PULU | SPACER WASHER | 1,00mm | | ♦ | ♦ | | |
| 14 | K21.04251 | 387 263 3852 | | 1 | TAKVİYE SİLİNDİR PULU | SPACER WASHER | 2,00mm | | ♦ | ♦ | | |
| 15 | | 014 997 1248 | | 1 | TAKVİYE SİLİNDİR ORİNGİ | O-RING | 56,2X3mm | | ♦ | | | |
| 15 | K21.06534 | 022 997 4248 | | 1 | TAKVİYE SİLİNDİR ORİNGİ | O-RING | 55,6X3mm | | ♦ | | | |
| 16 | K21.06994 | 945 267 0218 | (387 267 0918) | 1 | TAKVİYE MİL PİSTONU | PISTON | | | ♦ | ♦ | | |
| | | | (387 267 0618) | | | | | | | | | |
| 17 | K21.03524 | 006 997 6447 | (020 997 6647) | 1 | TAKVİYE HAVA KEÇESİ | OIL SEAL | 41X48X11,5mm | | ♦ | ♦ | | |
| | | | (012 997 3347) | | | | | | | | | |
| 18 | K21.04178 | 387 267 0650 | (387 267 0250) | 1 | TAKVİYE HİLAL MİL BURCU | BUSHING | 34X22X8mm | | ♦ | ♦ | | |
| 19 | K21.03523 | 000 267 0197 | (000 267 0397) | 1 | TAKVİYE HİLAL MİL KEÇESİ | OIL SEAL | 22X32X8mm | | ♦ | ♦ | | |
| 20 | K21.06013 | 389 267 3319 | (389 267 0419) | 1 | TAKVİYE SİLİNDİR GÖVDESİ (BOŞ) | CYLINDER (EMPTY) | | | ♦ | | | |
| | | | (389 267 2119) | | | | | | | | | |
| | | | (389 267 2219) | | | | | | | | | |
| 21 | K21.06500 | | | Kit | TAKVİYE SİLİNDİR GÖVDESİ (DOLU) | CYLINDER (FULL) | | | ♦ | | | |

NOTES :
Alfabetic letters are used in conjunction with the encoded parts.

NOTLAR :
Alfabetik harfler ile kodlanan parçalar birlikte kullanılır.





Original parts names, oem numbers, symbols and descriptions used in this catalogue are for reference purposes only.

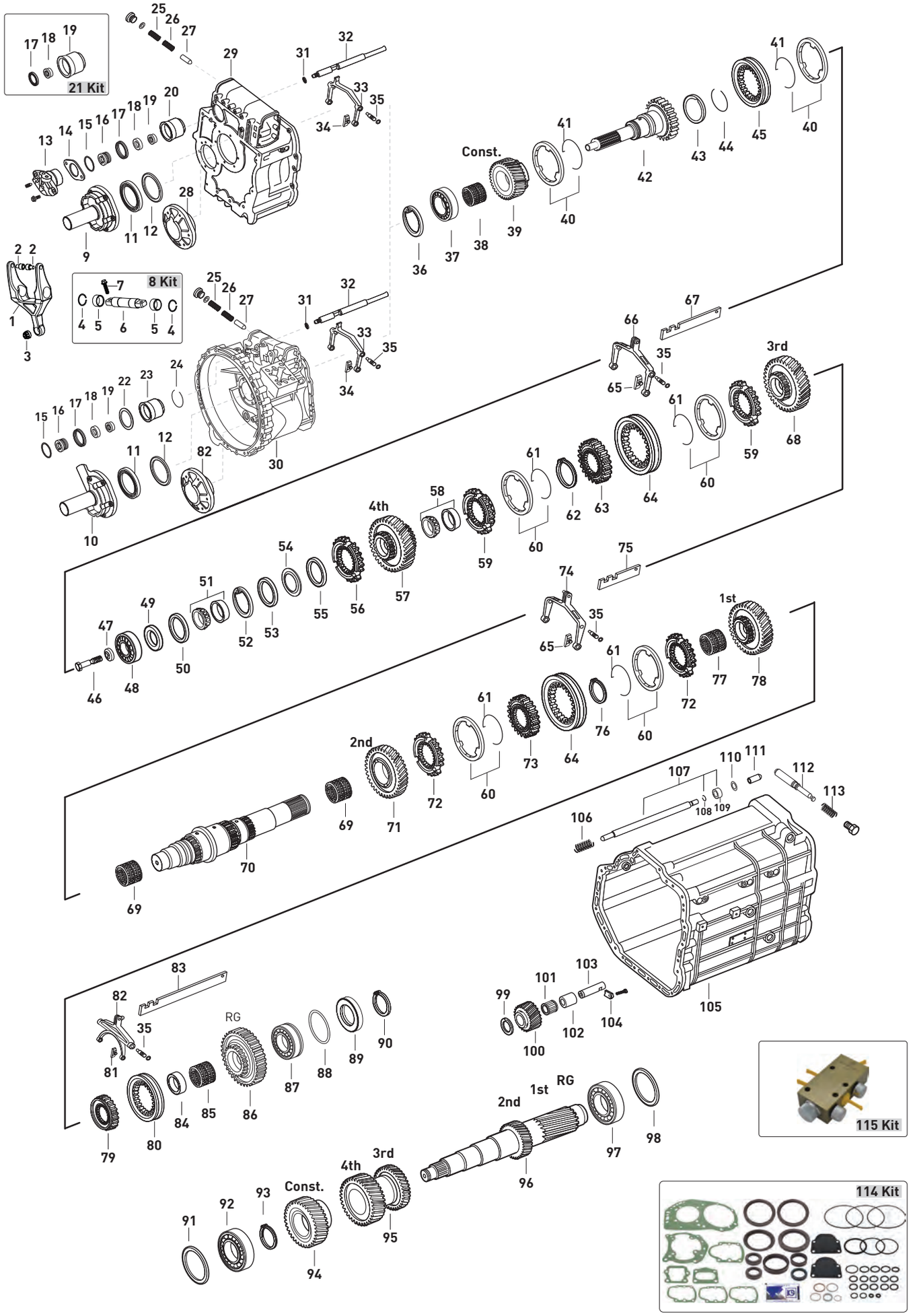




Original parts names, oem numbers, symbols and descriptions used in this catalogue are for reference purposes only.

| Fig. | Kacmaz No | Oem No | Oem Old No | Pcs. | Ürün Tanımı | Description | Sizes | Not | EPS | WSK400+RETARDER | | |
|---|---|---|---|---|---|---|---|---|---|---|---|---|
| 22 | K21.04233 | 389 262 2555 | | 1 | TAKVİYE SİLİNDİR PULU | THRUST WASHER | 0,70mm | | | ♦ | | |
| 22 | K21.04234 | 389 262 2655 | | 1 | TAKVİYE SİLİNDİR PULU | THRUST WASHER | 0,90mm | | | ♦ | | |
| 22 | K21.04112 | 389 262 3254 | | 1 | TAKVİYE SİLİNDİR PULU | THRUST WASHER | 1,05mm | | | ♦ | | |
| 22 | K21.04111 | 389 262 3354 | | 1 | TAKVİYE SİLİNDİR PULU | THRUST WASHER | 1,10mm | | | ♦ | | |
| 22 | K21.04109 | 389 262 3554 | | 1 | TAKVİYE SİLİNDİR PULU | THRUST WASHER | 1,20mm | | | ♦ | | |
| 22 | K21.04105 | 389 262 2052 | | 1 | TAKVİYE SİLİNDİR PULU | THRUST WASHER | 1,40mm | | | ♦ | | |
| 22 | K21.04093 | 389 262 2355 | | 1 | TAKVİYE SİLİNDİR PULU | THRUST WASHER | 1,79mm | | | ♦ | | |
| 22 | K21.04025 | 389 262 3252 | | 1 | TAKVİYE SİLİNDİR PULU | THRUST WASHER | 2,00mm | | | ♦ | | |
| 22 | K21.04024 | 389 262 3352 | | 1 | TAKVİYE SİLİNDİR PULU | THRUST WASHER | 2,50mm | | | ♦ | | |
| 23 | K21.06036 | 945 267 0819 | (945 267 0119) | 1 | TAKVİYE SİLİNDİR GÖVDESİ | CYLINDER | | | | ♦ | | |
| | | | (945 267 0719) | | | | | | | | | |
| | | | (945 267 0019) | | | | | | | | | |
| 24 | | 006 994 4241 | | 1 | TAKVİYE SİLİNDİR GÖVDE SEKMANI | LOCK | 65X2,5mm | | | ♦ | | |
| 25 | K21.06015 | 387 993 4501 | | 1 | ŞANZIMAN TAKVİYE KİLİT FİŞEK YAYI | SPRING | 6,2X63mm | | ♦ | ♦ | | |
| 26 | K21.03500 | 387 993 4401 | (387 993 2501) | 1 | KİLİT YAYI | SPRING | 9,8X63,3mm | | ♦ | ♦ | | |
| 27 | K21.03492 | 389 267 1174 | (387 267 0074) | 1 | KİLİT FİŞEĞİ | PIN | | | ♦ | ♦ | | |
| 28 | | 389 261 1933 | (389 261 0633) | 1 | GRUP MİLİ ÖN BİLYA KAPAĞI | COVER | | | ♦ | ♦ | | |
| | | | (389 262 0133) | | | | | | | | | |
| 29 | | 389 261 9602 | (389 261 0308) | 1 | ŞANZIMAN ÖN GÖVDE | HOUSING | | | ♦ | | | |
| 30 | | 389 261 1408 | (389 261 0708) | 1 | ŞANZIMAN ÖN GÖVDE | HOUSING | | | | ♦ | | |
| 31 | K21.04160 | 387 263 2652 | | 1 | TAKVİYE HİLAL MİL PULU | SPACER WASHER | 0,20mm | | ♦ | ♦ | | |
| 31 | K21.04161 | 387 263 2752 | | 1 | TAKVİYE HİLAL MİL PULU | SPACER WASHER | 0,40mm | | ♦ | ♦ | | |
| 31 | | 387 263 2852 | | 1 | TAKVİYE HİLAL MİL PULU | SPACER WASHER | 0,60mm | | ♦ | ♦ | | |
| 31 | | 387 263 3052 | | 1 | TAKVİYE HİLAL MİL PULU | SPACER WASHER | 1,00mm | | ♦ | ♦ | | |
| 32 | | 389 267 3017 | | 1 | TAKVİYE HİLAL MİLİ | GEAR SHIFT RAIL | | | ♦ | | | |
| 32 | | 389 267 2217 | | 1 | TAKVİYE HİLAL MİLİ | GEAR SHIFT RAIL | | | ♦ | | | |
| 32 | | 945 267 0217 | | 1 | TAKVİYE HİLAL MİLİ | GEAR SHIFT RAIL | | | | ♦ | | |
| 33 | K21.06406 | 389 265 0601 | | 1 | TAKVİYE HİLALİ | GEAR SHIFT FORK | | | ♦ | ♦ | | |
| 34 | K21.03406 | 389 265 2449 | (945 265 0349) | 2 | TAKVİYE HİLAL PABUCU | SLIDING PAD | | | ♦ | ♦ | | |
| | | | (387 265 0049) | | | | | | | | | |
| | | | (389 265 0949) | | | | | | | | | |
| | | | (389 265 1249) | | | | | | | | | |
| 35 | | 389 265 1674 | | 8 | HİLAL CİVATASI | PIN | | OLD | ♦ | ♦ | | |
| 35 | K21.04307 | 960 265 0774 | (945 265 1274) | 8 | HİLAL CİVATASI | PIN | | NEW | ♦ | ♦ | | |
| | | | (945 265 2974) | | | | | | | | | |
| | | | (945 265 2774) | | | | | | | | | |
| 36 | K21.04347 | 387 262 8673 | | 1 | PRİZDİREK ÖN BİLYA SEKMANI | RETAINING RING | 3,15mm | | ♦ | ♦ | | |
| 36 | K21.04346 | 387 262 8773 | | 1 | PRİZDİREK ÖN BİLYA SEKMANI | RETAINING RING | 3,20mm | | ♦ | ♦ | | |
| 36 | K21.07015 | 387 262 8873 | | 1 | PRİZDİREK ÖN BİLYA SEKMANI | RETAINING RING | 3,25mm | | ♦ | ♦ | | |
| 36 | K21.04348 | 387 262 8973 | | 1 | PRİZDİREK ÖN BİLYA SEKMANI | RETAINING RING | 3,30mm | | ♦ | ♦ | | |
| 36 | K21.07016 | 387 262 9073 | | 1 | PRİZDİREK ÖN BİLYA SEKMANI | RETAINING RING | 3,35mm | | ♦ | ♦ | | |
| 36 | K21.04349 | 387 262 9173 | | 1 | PRİZDİREK ÖN BİLYA SEKMANI | RETAINING RING | 3,40mm | | ♦ | ♦ | | |
| 36 | K21.07017 | 387 262 9273 | | 1 | PRİZDİREK ÖN BİLYA SEKMANI | RETAINING RING | 3,45mm | | ♦ | ♦ | | |
| 36 | K21.04350 | 387 262 9373 | | 1 | PRİZDİREK ÖN BİLYA SEKMANI | RETAINING RING | 3,50mm | | ♦ | ♦ | | |
| 36 | | 387 262 6873 | | 1 | PRİZDİREK ÖN BİLYA SEKMANI | RETAINING RING | 3,65mm | | ♦ | ♦ | | |
| 36 | | 387 262 6973 | | 1 | PRİZDİREK ÖN BİLYA SEKMANI | RETAINING RING | 3,70mm | | ♦ | ♦ | | |
| 36 | | 387 262 7073 | | 1 | PRİZDİREK ÖN BİLYA SEKMANI | RETAINING RING | 3,75mm | | ♦ | ♦ | | |
| 36 | | 387 262 7173 | | 1 | PRİZDİREK ÖN BİLYA SEKMANI | RETAINING RING | 3,80mm | | ♦ | ♦ | | |
| 36 | | 387 262 7273 | | 1 | PRİZDİREK ÖN BİLYA SEKMANI | RETAINING RING | 3,85mm | | ♦ | ♦ | | |
| 36 | | 387 262 7373 | | 1 | PRİZDİREK ÖN BİLYA SEKMANI | RETAINING RING | 3,90mm | | ♦ | ♦ | | |
| 36 | | 387 262 7473 | | 1 | PRİZDİREK ÖN BİLYA SEKMANI | RETAINING RING | 3,95mm | | ♦ | ♦ | | |
| 36 | | 387 262 7573 | | 1 | PRİZDİREK ÖN BİLYA SEKMANI | RETAINING RING | 4,00mm | | ♦ | ♦ | | |
| 37 | K21.03618 | 011 981 1305 | (014 981 9005) | 1 | PRİZDİREK ÖN BİLYA | ROLLER BEARING | 75X140X34,25mm | | ♦ | ♦ | | |

NOTES :
Alfabetic letters are used in conjunction with the encoded parts.

NOTLAR :
Alfabetik harfler ile kodlanan parçalar birlikte kullanılır.





Original parts names, oem numbers, symbols and descriptions used in this catalogue are for reference purposes only.

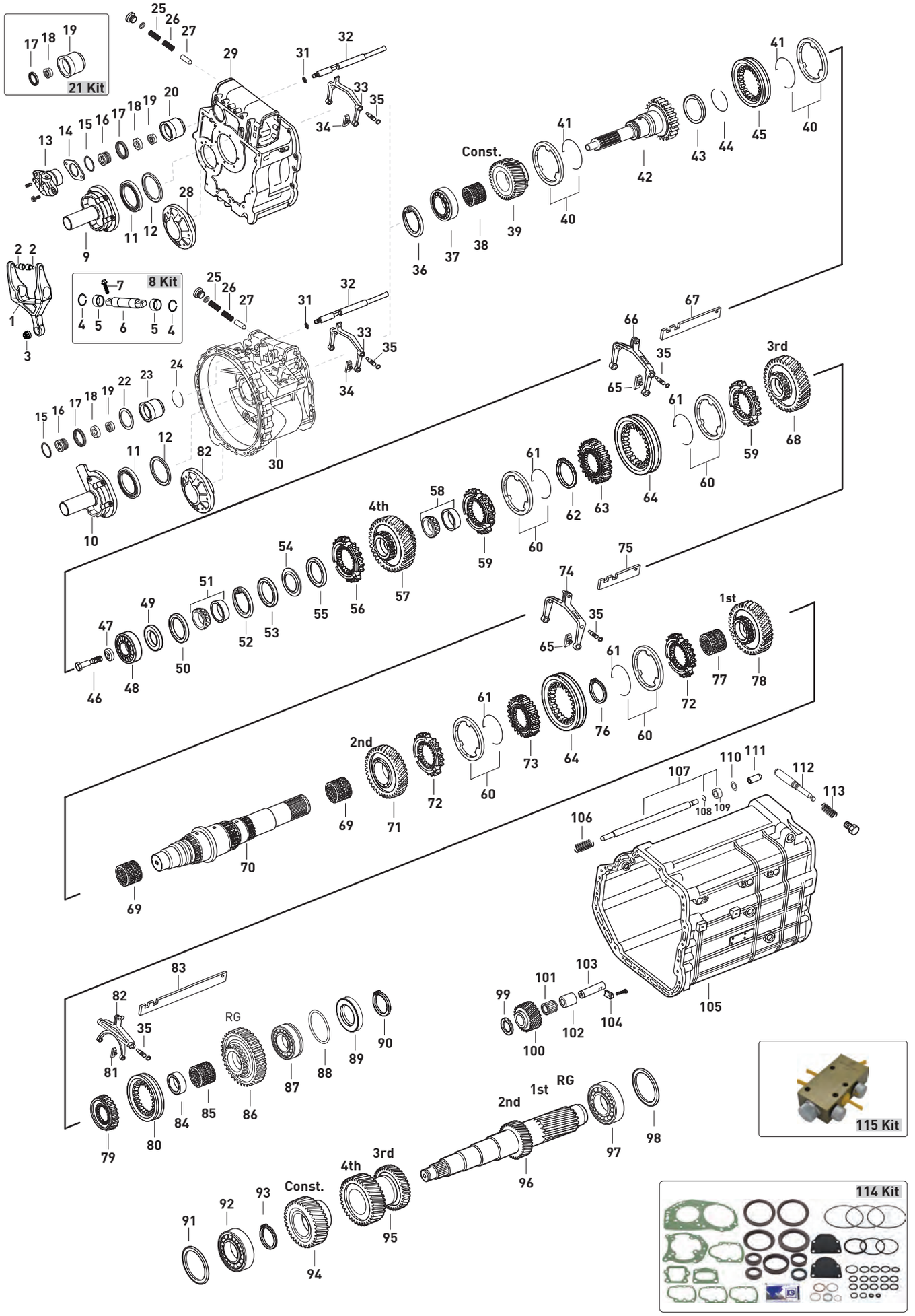




Original parts names, oem numbers, symbols and descriptions used in this catalogue are for reference purposes only.

| Fig. | Kacmaz No | Oem No | Oem Old No | Pcs. | Ürün Tanımı | Description | Sizes | Not | EPS | WSK400+RETARDER |
|---|---|---|---|---|---|---|---|---|---|---|
| 38 | K21.03819 | 009 981 1610 | (008 981 9410) | 1 | TAKVİYE MASURA BİLYA | NEEDLE CAGE | 85X93X37mm | | ♦ | ♦ |
| | | | (019 981 0810) | | | | | | | |
| 39 | K21.03091 | 389 262 7710 | (389 262 2710) | 1 | TAKVİYE DİŞLİSİ 26 DİŞ | CONSTANT GEAR 26 T. | | | ♦ | ♦ |
| 40 | K21.03015 | 389 262 0637 | (387 262 0837) | 2 | TAKVİYE FRENLEME (Mo) | SYNCHRONIZING CONE / Mo | | | ♦ | ♦ |
| | | | (389 262 1037) | | | | | | | |
| 41 | K21.03044 | 387 262 1093 | (387 262 0693) | 2 | FRENLEME TELİ | SPRING | | | ♦ | ♦ |
| | | | (960 262 1393) | | | | | | | |
| 42 | K21.03046 | 389 262 2901 | | 1 | PRİZDİREK 60 DİŞ | INPUT SHAFT 60 T. | | | ♦ | |
| 42 | | 389 262 3101 | | 1 | PRİZDİREK 60 DİŞ | INPUT SHAFT 60 T. | | | | ♦ |
| 43 | K21.03522 | 018 997 7147 | (018 997 7547) | 1 | PRİZDİREK ARKA KEÇE | OIL SEAL | 80X104X10mm | | ♦ | ♦ |
| 44 | K21.04146 | 389 262 0973 | (945 262 0073) | 1 | PRİZDİREK KEÇE SEKMANI | LOCK RING | | | ♦ | ♦ |
| 45 | K21.03011 | 389 262 3023 | (389 262 2223) | 1 | TAKVİYE HALKA | ENGAGING SLEVEE | | | ♦ | ♦ |
| | | | (389 262 0623) | | | | | | | |
| 46 | K21.03407 | 389 990 1819 | | 1 | KAMALI MİL UÇ VİDA (Sol Diş) | SCREW (Bolts -L- teeth) | | | ♦ | ♦ |
| 47 | K21.04126 | 389 262 0062 | | 1 | KAMALI MİL UÇ VİDA PULU | WASHER | | | ♦ | ♦ |
| 48 | K21.03643 | 008 981 2805 | (008 981 4005) | 1 | KAMALI MİL UÇ BİLYA | ROLLER BEARING | 40X91X32mm | | ♦ | ♦ |
| 49 | K21.04127 | 389 262 6454 | | 1 | KAMALI MİL UÇ BİLYA ALT PULU | THRUST WASHER | 2,50mm | | ♦ | ♦ |
| 49 | K21.04120 | 389 262 5552 | | 1 | KAMALI MİL UÇ BİLYA ALT PULU | THRUST WASHER | 1,20mm | | ♦ | ♦ |
| 49 | K21.04149 | | | 1 | KAMALI MİL UÇ BİLYA ALT PULU | THRUST WASHER | 1,10mm | | ♦ | ♦ |
| 49 | K21.04148 | | | 1 | KAMALI MİL UÇ BİLYA ALT PULU | THRUST WASHER | 1,00mm | | ♦ | ♦ |
| 49 | K21.04147 | | | 1 | KAMALI MİL UÇ BİLYA ALT PULU | THRUST WASHER | 0,90mm | | ♦ | ♦ |
| 49 | K21.04121 | 389 262 5652 | | 1 | KAMALI MİL UÇ BİLYA ALT PULU | THRUST WASHER | 0,80mm | | ♦ | ♦ |
| 49 | K21.04128 | 389 262 2954 | | 1 | KAMALI MİL UÇ BİLYA ALT PULU | THRUST WASHER | 0,70mm | | ♦ | ♦ |
| 49 | K21.04129 | 389 262 3054 | | 1 | KAMALI MİL UÇ BİLYA ALT PULU | THRUST WASHER | 0,60mm | | ♦ | ♦ |
| 49 | K21.04122 | 389 262 5752 | | 1 | KAMALI MİL UÇ BİLYA ALT PULU | THRUST WASHER | 0,50mm | | ♦ | ♦ |
| 49 | K21.04130 | 389 262 7954 | | 1 | KAMALI MİL UÇ BİLYA ALT PULU | THRUST WASHER | 0,30mm | | ♦ | ♦ |
| 49 | K21.04123 | 389 262 5852 | | 1 | KAMALI MİL UÇ BİLYA ALT PULU | THRUST WASHER | 0,20mm | | ♦ | ♦ |
| 49 | K21.04124 | 389 262 5952 | | 1 | KAMALI MİL UÇ BİLYA ALT PULU | THRUST WASHER | 0,10mm | | ♦ | ♦ |
| 50 | K21.04024 | 389 262 3352 | | 1 | 4.VİTES ÖN BİLYA AYAR PULU | THRUST WASHER | 2,50mm | | ♦ | ♦ |
| 50 | K21.04025 | 389 262 3252 | | 1 | 4.VİTES ÖN BİLYA AYAR PULU | THRUST WASHER | 2,00mm | | ♦ | ♦ |
| 50 | K21.04026 | 389 262 3152 | | 1 | 4.VİTES ÖN BİLYA AYAR PULU | THRUST WASHER | 1,95mm | | ♦ | ♦ |
| 50 | K21.04027 | 389 262 3052 | | 1 | 4.VİTES ÖN BİLYA AYAR PULU | THRUST WASHER | 1,90mm | | ♦ | ♦ |
| 50 | K21.04028 | 389 262 2952 | | 1 | 4.VİTES ÖN BİLYA AYAR PULU | THRUST WASHER | 1,85mm | | ♦ | ♦ |
| 50 | K21.04092 | 389 262 2455 | | 1 | 4.VİTES ÖN BİLYA AYAR PULU | THRUST WASHER | 1,82mm | | ♦ | ♦ |
| 50 | K21.04093 | 389 262 2355 | | 1 | 4.VİTES ÖN BİLYA AYAR PULU | THRUST WASHER | 1,79mm | | ♦ | ♦ |
| 50 | K21.04094 | 389 262 2255 | | 1 | 4.VİTES ÖN BİLYA AYAR PULU | THRUST WASHER | 1,76mm | | ♦ | ♦ |
| 50 | K21.04095 | 389 262 2155 | | 1 | 4.VİTES ÖN BİLYA AYAR PULU | THRUST WASHER | 1,73mm | | ♦ | ♦ |
| 50 | K21.04096 | 389 262 2055 | | 1 | 4.VİTES ÖN BİLYA AYAR PULU | THRUST WASHER | 1,67mm | | ♦ | ♦ |
| 50 | K21.04097 | 389 262 1955 | | 1 | 4.VİTES ÖN BİLYA AYAR PULU | THRUST WASHER | 1,64mm | | ♦ | ♦ |
| 50 | K21.04098 | 389 262 1855 | | 1 | 4.VİTES ÖN BİLYA AYAR PULU | THRUST WASHER | 1,61mm | | ♦ | ♦ |
| 50 | K21.04099 | 389 262 1755 | | 1 | 4.VİTES ÖN BİLYA AYAR PULU | THRUST WASHER | 1,58mm | | ♦ | ♦ |
| 50 | K21.04100 | 389 262 2352 | | 1 | 4.VİTES ÖN BİLYA AYAR PULU | THRUST WASHER | 1,55mm | | ♦ | ♦ |
| 50 | K21.04101 | 389 262 1655 | | 1 | 4.VİTES ÖN BİLYA AYAR PULU | THRUST WASHER | 1,52mm | | ♦ | ♦ |
| 50 | K21.04102 | 389 262 1555 | | 1 | 4.VİTES ÖN BİLYA AYAR PULU | THRUST WASHER | 1,49mm | | ♦ | ♦ |
| 50 | K21.04103 | 389 262 1455 | | 1 | 4.VİTES ÖN BİLYA AYAR PULU | THRUST WASHER | 1,46mm | | ♦ | ♦ |
| 50 | K21.04104 | 389 262 1355 | | 1 | 4.VİTES ÖN BİLYA AYAR PULU | THRUST WASHER | 1,43mm | | ♦ | ♦ |
| 50 | K21.04105 | 389 262 2052 | | 1 | 4.VİTES ÖN BİLYA AYAR PULU | THRUST WASHER | 1,40mm | | ♦ | ♦ |
| 50 | K21.04106 | 389 262 1952 | | 1 | 4.VİTES ÖN BİLYA AYAR PULU | THRUST WASHER | 1,35mm | | ♦ | ♦ |
| 50 | K21.04107 | 389 262 2754 | | 1 | 4.VİTES ÖN BİLYA AYAR PULU | THRUST WASHER | 1,30mm | | ♦ | ♦ |
| 50 | K21.04108 | 389 262 3654 | | 1 | 4.VİTES ÖN BİLYA AYAR PULU | THRUST WASHER | 1,25mm | | ♦ | ♦ |
| 50 | K21.04109 | 389 262 3554 | | 1 | 4.VİTES ÖN BİLYA AYAR PULU | THRUST WASHER | 1,20mm | | ♦ | ♦ |
| 50 | K21.04110 | 389 262 3454 | | 1 | 4.VİTES ÖN BİLYA AYAR PULU | THRUST WASHER | 1,15mm | | ♦ | ♦ |
| 50 | K21.04111 | 389 262 3354 | | 1 | 4.VİTES ÖN BİLYA AYAR PULU | THRUST WASHER | 1,10mm | | ♦ | ♦ |

NOTES :
Alfabetic letters are used in conjunction with the encoded parts.

NOTLAR :
Alfabetik harfler ile kodlanan parçalar birlikte kullanılır.





Original parts names, oem numbers, symbols and descriptions used in this catalogue are for reference purposes only.

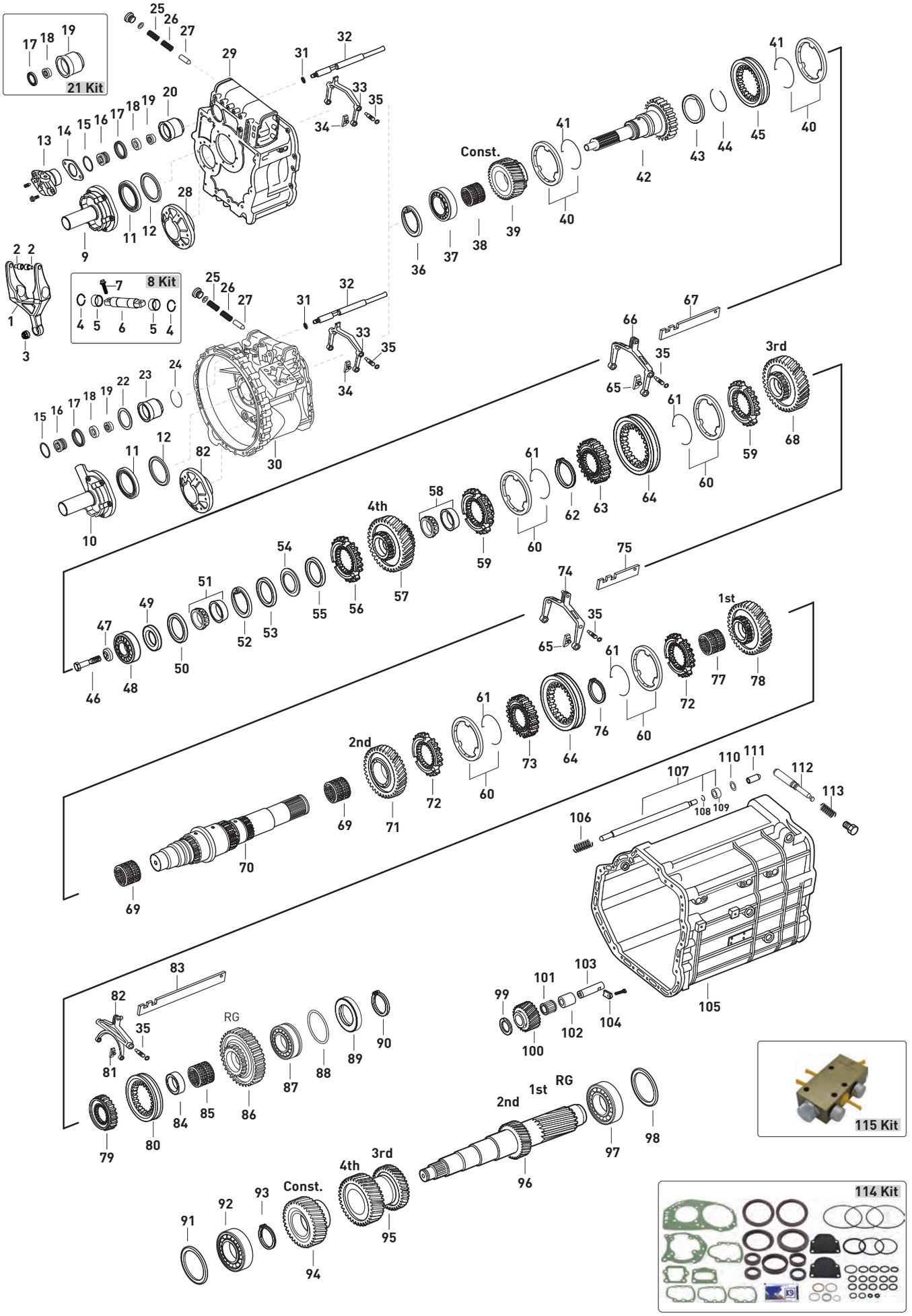






Original parts names, oem numbers, symbols and descriptions used in this catalogue are for reference purposes only.

| Fig. | Kacmaz No | Oem No | Oem Old No | Pcs. | Ürün Tanımı | Description | Sizes | Not | EPS | WSK400+RETARDER | | |
|---|---|---|---|---|---|---|---|---|---|---|---|---|
| 50 | K21.04112 | 389 262 3254 | | 1 | 4.VİTES ÖN BİLYA AYAR PULU | THRUST WASHER | 1,05mm | | ♦ | ♦ | | |
| 50 | K21.04113 | 389 262 2854 | | 1 | 4.VİTES ÖN BİLYA AYAR PULU | THRUST WASHER | 0,50mm | | ♦ | ♦ | | |
| 50 | K21.94113 | | | 1 | 4.VİTES ÖN BİLYA AYAR PULU | THRUST WASHER | 0,40mm | | ♦ | ♦ | | |
| 50 | K21.84113 | | | 1 | 4.VİTES ÖN BİLYA AYAR PULU | THRUST WASHER | 0,30mm | | ♦ | ♦ | | |
| 50 | K21.74113 | | | 1 | 4.VİTES ÖN BİLYA AYAR PULU | THRUST WASHER | 0,20mm | | ♦ | ♦ | | |
| 50 | K21.64113 | | | 1 | 4.VİTES ÖN BİLYA AYAR PULU | THRUST WASHER | 0,10mm | | ♦ | ♦ | | |
| 51 | K21.03633 | 002 981 7905 | (003 981 8305) | 1 | 4.VİTES DİŞLİSİ ÖN BİLYA | ROLLER BEARING | 50X90X32mm | | ♦ | ♦ | | |
| | | | (004 981 4205) | | | | | | | | | |
| | | | (011 981 7605) | | | | | | | | | |
| 52 | K21.04339 | 387 268 0773 | | 1 | 4.VİTES DİŞLİ SEKMANI | RETAINING RING | 3,05mm | | ♦ | ♦ | | |
| 52 | | 387 268 0873 | | 1 | 4.VİTES DİŞLİ SEKMANI | RETAINING RING | 3,08mm | | ♦ | ♦ | | |
| 52 | | 387 268 0973 | | 1 | 4.VİTES DİŞLİ SEKMANI | RETAINING RING | 3,11mm | | ♦ | ♦ | | |
| 52 | | 387 268 1073 | | 1 | 4.VİTES DİŞLİ SEKMANI | RETAINING RING | 3,14mm | | ♦ | ♦ | | |
| 53 | K21.04056 | 389 262 1251 | | 1 | 4.VİTES BİLYA ARA AYAR PULU | THRUST WASHER | 2,20mm | | ♦ | ♦ | | |
| 53 | K21.04055 | 389 262 2151 | | 1 | 4.VİTES BİLYA ARA AYAR PULU | THRUST WASHER | 2,15mm | | ♦ | ♦ | | |
| 53 | K21.04054 | 389 262 1151 | | 1 | 4.VİTES BİLYA ARA AYAR PULU | THRUST WASHER | 2,10mm | | ♦ | ♦ | | |
| 53 | K21.04053 | 389 262 2051 | | 1 | 4.VİTES BİLYA ARA AYAR PULU | THRUST WASHER | 2,05mm | | ♦ | ♦ | | |
| 53 | K21.04052 | 389 262 1051 | | 1 | 4.VİTES BİLYA ARA AYAR PULU | THRUST WASHER | 2,00mm | | ♦ | ♦ | | |
| 53 | K21.04051 | 389 262 1951 | | 1 | 4.VİTES BİLYA ARA AYAR PULU | THRUST WASHER | 1,95mm | | ♦ | ♦ | | |
| 53 | K21.04050 | 389 262 0951 | | 1 | 4.VİTES BİLYA ARA AYAR PULU | THRUST WASHER | 1,90mm | | ♦ | ♦ | | |
| 53 | K21.04049 | 389 262 1851 | | 1 | 4.VİTES BİLYA ARA AYAR PULU | THRUST WASHER | 1,85mm | | ♦ | ♦ | | |
| 53 | K21.04048 | 389 262 0851 | | 1 | 4.VİTES BİLYA ARA AYAR PULU | THRUST WASHER | 1,80mm | | ♦ | ♦ | | |
| 53 | K21.04125 | 389 262 1751 | | 1 | 4.VİTES BİLYA ARA AYAR PULU | THRUST WASHER | 1,75mm | | ♦ | ♦ | | |
| 53 | K21.04157 | | | 1 | 4.VİTES BİLYA ARA AYAR PULU | THRUST WASHER | 1,60mm | | ♦ | ♦ | | |
| 54 | K21.04070 | 389 262 1854 | | 1 | 4.VİTES DİŞLİ BİLYA ARA SACI | SPACER WASHER | | | ♦ | ♦ | | |
| 55 | K21.04057 | 389 262 2751 | | 1 | 4.VİTES BİLYA ARA AYAR PULU | THRUST WASHER | 5,40mm | | ♦ | ♦ | | |
| 55 | K21.04058 | 389 262 2951 | | 1 | 4.VİTES BİLYA ARA AYAR PULU | THRUST WASHER | 5,50mm | | ♦ | ♦ | | |
| 55 | K21.04059 | 389 262 3151 | | 1 | 4.VİTES BİLYA ARA AYAR PULU | THRUST WASHER | 5,60mm | | ♦ | ♦ | | |
| 55 | K21.04060 | 389 262 3351 | | 1 | 4.VİTES BİLYA ARA AYAR PULU | THRUST WASHER | 5,70mm | | ♦ | ♦ | | |
| 55 | K21.04061 | 389 262 3551 | | 1 | 4.VİTES BİLYA ARA AYAR PULU | THRUST WASHER | 5,80mm | | ♦ | ♦ | | |
| 55 | K21.04062 | 389 262 3751 | | 1 | 4.VİTES BİLYA ARA AYAR PULU | THRUST WASHER | 5,90mm | | ♦ | ♦ | | |
| 55 | K21.04063 | 389 262 3951 | | 1 | 4.VİTES BİLYA ARA AYAR PULU | THRUST WASHER | 6,00mm | | ♦ | ♦ | | |
| 55 | K21.04064 | 389 262 4151 | | 1 | 4.VİTES BİLYA ARA AYAR PULU | THRUST WASHER | 6,10mm | | ♦ | ♦ | | |
| 55 | K21.04065 | 389 262 4351 | | 1 | 4.VİTES BİLYA ARA AYAR PULU | THRUST WASHER | 6,20mm | | ♦ | ♦ | | |
| 55 | K21.04066 | 389 262 4551 | | 1 | 4.VİTES BİLYA ARA AYAR PULU | THRUST WASHER | 6,30mm | | ♦ | ♦ | | |
| 55 | K21.04067 | 389 262 4751 | | 1 | 4.VİTES BİLYA ARA AYAR PULU | THRUST WASHER | 6,40mm | | ♦ | ♦ | | |
| 55 | K21.04068 | 389 262 4951 | | 1 | 4.VİTES BİLYA ARA AYAR PULU | THRUST WASHER | 6,50mm | | ♦ | ♦ | | |
| 55 | K21.04069 | 389 262 5151 | | 1 | 4.VİTES BİLYA ARA AYAR PULU | THRUST WASHER | 6,60mm | | ♦ | ♦ | | |
| 56 | K21.03012 | 389 262 5634 | (389 262 3934) | 1 | TAKVİYE SENKROMENÇ | ENGAGING RING | | | ♦ | ♦ | | |
| | | | (389 262 2434) | | | | | | | | | |
| | | | (387 262 0834) | | | | | | | | | |
| 57 | K21.03096 | 389 262 5610 | (389 262 4410) | 1 | 4.VİTES DİŞLİSİ 24 DİŞ | GEAR 4th 24 T. | | | ♦ | ♦ | | |
| 58 | K21.03662 | 011 981 7705 | (014 981 8505) | 1 | 4.VİTES DİŞLİSİ ARKA BİLYA | ROLLER BEARING | 55X90X23mm | | ♦ | ♦ | | |
| | | | (012 981 1505) | | | | | | | | | |
| 59 | K21.03027 | 945 262 0534 | (389 262 5034) | 2 | 3./4.VİTES SENKROMENÇ | ENGAGING RING | | | ♦ | ♦ | | |
| 60 | K21.03016 | 389 262 0737 | (387 262 0937) | 4 | 1./2.-3./4.VİTES FRENLEME (Mo) | SYNCHRONIZING CONE / Mo | | | ♦ | ♦ | | |
| | | | (389 262 1137) | | | | | | | | | |
| 60 | K21.06041 | 945 260 0650 | | 4 | 1./2.-3./4.VİTES FRENLEME (C) | SYNCHRONIZING CONE / C | | | ♦ | ♦ | | |
| 61 | K21.03055 | 387 262 0893 | (387 262 0793) | 4 | FRENLEME TELİ | SPRING | | | ♦ | ♦ | | |
| 62 | K21.04336 | 387 262 0473 | | 1 | 3./4.VİTES YILDIZ DİŞLİ SEKMANI | RETAINING RING | 2,40mm | | ♦ | ♦ | | |
| 62 | | 387 262 0573 | | 1 | 3./4.VİTES YILDIZ DİŞLİ SEKMANI | RETAINING RING | 2,45mm | | ♦ | ♦ | | |
| 62 | K21.04352 | 387 262 0673 | | 1 | 3./4.VİTES YILDIZ DİŞLİ SEKMANI | RETAINING RING | 2,50mm | | ♦ | ♦ | | |
| 62 | | 387 262 0773 | | 1 | 3./4.VİTES YILDIZ DİŞLİ SEKMANI | RETAINING RING | 2,55mm | | ♦ | ♦ | | |

NOTES :
Alfabetic letters are used in conjunction with the encoded parts.

NOTLAR :
Alfabetik harfler ile kodlanan parçalar birlikte kullanılır.





Original parts names, oem numbers, symbols and descriptions used in this catalogue are for reference purposes only.

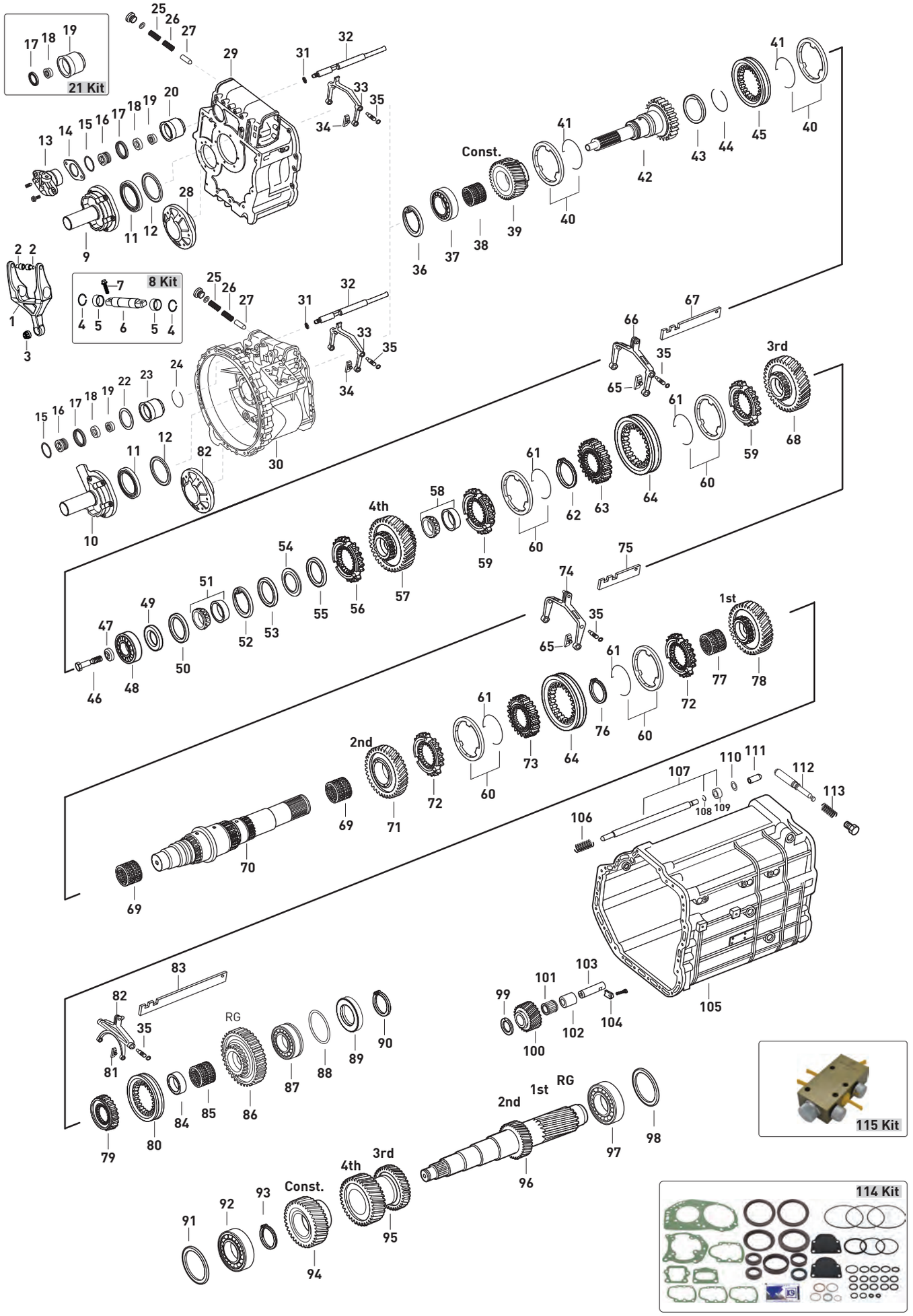




Original parts names, oem numbers, symbols and descriptions used in this catalogue are for reference purposes only.

| Fig. | Kacmaz No | Oem No | Oem Old No | Pcs. | Ürün Tanımı | Description | Sizes | Not | EPS | WSK400+RETARDER | | |
|---|---|---|---|---|---|---|---|---|---|---|---|---|
| 62 | K21.04337 | 387 262 0873 | | 1 | 3./4.VİTES YILDIZ DİŞLİ SEKMANI | RETAINING RING | 2,60mm | | ♦ | ♦ | | |
| 62 | K21.06929 | 387 262 0973 | | 1 | 3./4.VİTES YILDIZ DİŞLİ SEKMANI | RETAINING RING | 2,65mm | | ♦ | ♦ | | |
| 62 | K21.06669 | 387 262 7673 | | 1 | 3./4.VİTES YILDIZ DİŞLİ SEKMANI | RETAINING RING | 2,70mm | | ♦ | ♦ | | |
| 62 | K21.07020 | 387 262 7773 | | 1 | 3./4.VİTES YILDIZ DİŞLİ SEKMANI | RETAINING RING | 2,75mm | | ♦ | ♦ | | |
| 62 | K21.06930 | 387 262 7873 | | 1 | 3./4.VİTES YILDIZ DİŞLİ SEKMANI | RETAINING RING | 2,80mm | | ♦ | ♦ | | |
| 63 | K21.03100 | 389 262 1535 | | 1 | 3./4.VİTES YILDIZ DİŞLİ | SYNCHRONIZER HUB | | | ♦ | ♦ | | |
| 64 | K21.03010 | 389 262 2923 | (389 262 0723) | 2 | 1./2.-3./4.VİTES HALKA | ENGAGING SLEEVE | | | ♦ | ♦ | | |
| 65 | K21.03408 | 389 265 2349 | (389 265 1149) | 4 | 1./ 2-3./4.VİTES HİLAL PABUCU | SLIDING PAD | | | ♦ | ♦ | | |
| | | | (389 265 0849) | | | | | | | | | |
| | | | (945 265 0249) | | | | | | | | | |
| 66 | | 389 260 4230 | (389 260 3030) | 1 | 3./4.VİTES HİLALİ | SHIFTING FORK | | | ♦ | ♦ | | |
| 67 | | 389 265 6304 | | 1 | 3./4.VİTES HİLAL ÇITASI | SHIFTING ROD | | | ♦ | ♦ | | |
| 68 | K21.03101 | 389 262 2113 | | 1 | 3.VİTES DİŞLİSİ 28 DİŞ | GEAR 3rd 28 T. | | | ♦ | ♦ | | |
| 69 | K21.03810 | 018 981 6610 | (010 981 5310) | 2 | 2./3.VİTES MASURA BİLYA | NEEDLE CAGE | 85X93X53mm | | ♦ | ♦ | | |
| 70 | K21.03104 | 389 262 1505 | (389 262 1205) | 1 | KAMALI MİL | MAIN SHAFT | | | ♦ | ♦ | | |
| 71 | K21.03106 | 389 262 1312 | (389 262 1212) | 1 | 2.VİTES DİŞLİSİ 32 DİŞ | GEAR 2nd 32 T. | | | ♦ | ♦ | | |
| 72 | K21.03025 | 945 262 0434 | (389 262 0034) | 2 | 1./2.VİTES SENKROMENÇ | ENGAGING RING | | | ♦ | ♦ | | |
| 73 | K21.03056 | 389 262 0035 | | 1 | 1./2.VİTES YILDIZ DİŞLİ | SYNCHRONIZER HUB | | | ♦ | ♦ | | |
| 74 | | 389 260 4430 | (389 260 0130) | 1 | 1./2.VİTES HİLALİ | SHIFTING FORK | | | ♦ | ♦ | | |
| 75 | | 389 265 6404 | | 1 | 1./2.VİTES HİLAL ÇITASI | SHIFTING ROD | | | ♦ | ♦ | | |
| 76 | K21.04343 | 387 262 2073 | | 1 | 1./2.VİTES YILDIZ DİŞLİ SEKMANI | RETAINING RING | 2,40mm | | ♦ | ♦ | | |
| 76 | K21.06687 | 387 262 2173 | | 1 | 1./2.VİTES YILDIZ DİŞLİ SEKMANI | RETAINING RING | 2,45mm | | ♦ | ♦ | | |
| 76 | K21.04342 | 007 994 0041 | (387 262 2273) | 1 | 1./2.VİTES YILDIZ DİŞLİ SEKMANI | RETAINING RING | 2,50mm | | ♦ | ♦ | | |
| 76 | K21.04359 | 387 262 2373 | | 1 | 1./2.VİTES YILDIZ DİŞLİ SEKMANI | RETAINING RING | 2,55mm | | ♦ | ♦ | | |
| 76 | K21.04345 | 387 262 2473 | | 1 | 1./2.VİTES YILDIZ DİŞLİ SEKMANI | RETAINING RING | 2,60mm | | ♦ | ♦ | | |
| 76 | K21.07021 | 387 262 2573 | | 1 | 1./2.VİTES YILDIZ DİŞLİ SEKMANI | RETAINING RING | 2,65mm | | ♦ | ♦ | | |
| 76 | K21.04344 | 387 262 7973 | | 1 | 1./2.VİTES YILDIZ DİŞLİ SEKMANI | RETAINING RING | 2,70mm | | ♦ | ♦ | | |
| 76 | K21.07022 | 387 262 8073 | | 1 | 1./2.VİTES YILDIZ DİŞLİ SEKMANI | RETAINING RING | 2,75mm | | ♦ | ♦ | | |
| 76 | K21.06588 | 387 262 8173 | | 1 | 1./2.VİTES YILDIZ DİŞLİ SEKMANI | RETAINING RING | 2,80mm | | ♦ | ♦ | | |
| 77 | K21.03817 | 019 981 4410 | (007 981 4210) | 1 | 1.VİTES MASURA BİLYA | NEEDLE CAGE | 75X83X55mm | | ♦ | ♦ | | |
| | | | (008 981 8310) | | | | | | | | | |
| | | | (009 981 0010) | | | | | | | | | |
| 78 | K21.03108 | 389 262 1611 | (389 262 1511) | 1 | 1.VİTES DİŞLİSİ 38 DİŞ | GEAR 1st 38 T. | | | ♦ | ♦ | | |
| 79 | K21.03059 | 389 262 0135 | | 1 | GERİ VİTES YILDIZ DİŞLİ | SYNCHRONIZER HUB | | | ♦ | ♦ | | |
| 80 | K21.03060 | 389 262 1723 | (389 262 0023) | 1 | GERİ VİTES HALKASI | ENGAGING SLEEVE | | | ♦ | ♦ | | |
| 80 | K21.03061 | 389 262 1823 | (389 262 0923) | 1 | GERİ VİTES HALKASI | ENGAGING SLEEVE | | | ♦ | ♦ | | |
| 81 | K21.03410 | 947 265 0249 | (945 265 0149) | 2 | GERİ VİTES HİLAL PABUCU | SLIDING PAD | | | ♦ | ♦ | | |
| 82 | | 389 260 4730 | (389 260 1630) | 1 | GERİ VİTES HİLALİ | SHIFTING FORK | | | ♦ | ♦ | | |
| 83 | | 389 265 3504 | | 1 | GERİ VİTES HİLAL ÇITASI | SHIFTING ROD | | | ♦ | ♦ | | |
| 84 | K21.03112 | 389 262 2550 | (389 262 1650) | 1 | GERİ VİTES MASURA BİLYA ÇANAĞI | BEARING RACE | | | ♦ | ♦ | | |
| | | | (389 262 0050) | | | | | | | | | |
| 85 | K21.03803 | 009 981 1510 | (017 981 7810) | 1 | GERİ VİTES MASURA BİLYA | NEEDLE CAGE | 78X86X35mm | | ♦ | ♦ | | |
| | | | (008 981 9310) | | | | | | | | | |
| | | | (012 981 9110) | | | | | | | | | |
| 86 | K21.03111 | 389 262 0333 | (389 262 0033) | 1 | GERİ VİTES DİŞLİSİ 34 DİŞ | REVERSE GEAR 34 T. | | | ♦ | ♦ | | |
| 87 | K21.03623 | 014 981 6105 | (016 981 1305) | 1 | KAMALI MİL ARKA BİLYA | ROLLER BEARING | 60X130X33,2mm | | ♦ | ♦ | | |
| | | | (014 981 7505) | | | | | | | | | |
| 87 | K21.06277 | 012 981 3905 | | 1 | KAMALI MİL ARKA BİLYA | ROLLER BEARING | 60X130X33,2mm | (K) | ♦ | ♦ | | |
| 88 | K21.04182 | 389 262 3552 | | 1 | KAMALI MİL ARKA BİLYA RAYNELİ | THRUST WASHER | 0,10mm | | ♦ | ♦ | | |
| 88 | K21.04184 | 389 262 3652 | | 1 | KAMALI MİL ARKA BİLYA RAYNELİ | THRUST WASHER | 0,15mm | | ♦ | ♦ | | |
| 88 | K21.04152 | 389 262 3752 | | 1 | KAMALI MİL ARKA BİLYA RAYNELİ | THRUST WASHER | 0,20mm | | ♦ | ♦ | | |
| 88 | K21.94152 | | | 1 | KAMALI MİL ARKA BİLYA RAYNELİ | THRUST WASHER | 0,30mm | | ♦ | ♦ | | |
| 88 | K21.04183 | 389 262 3852 | | 1 | KAMALI MİL ARKA BİLYA RAYNELİ | THRUST WASHER | 0,40mm | | ♦ | ♦ | | |

NOTES :
Alfabetic letters are used in conjunction with the encoded parts.

NOTLAR :
Alfabetik harfler ile kodlanan parçalar birlikte kullanılır.





Original parts names, oem numbers, symbols and descriptions used in this catalogue are for reference purposes only.

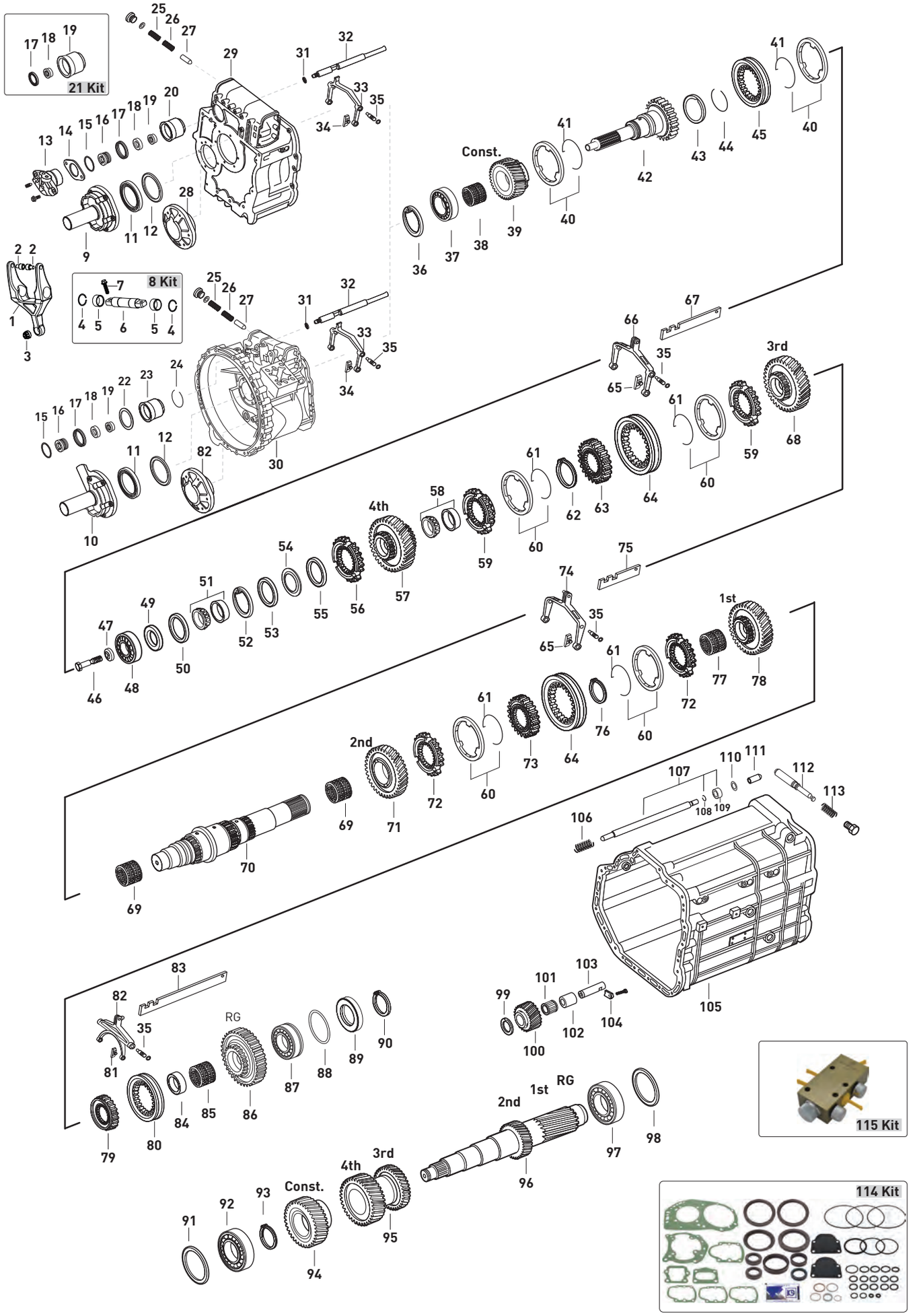




Original parts names, oem numbers, symbols and descriptions used in this catalogue are for reference purposes only.

| Fig. | Kacmaz No | Oem No | Oem Old No | Pcs. | Ürün Tanımı | Description | Sizes | Not | EPS | WSK400+RETARDER | | |
|---|---|---|---|---|---|---|---|---|---|---|---|---|
| 88 | K21.94183 | | | 1 | KAMALI MİL ARKA BİLYA RAYNELİ | THRUST WASHER | 0,50mm | | ♦ | ♦ | | |
| 88 | K21.84183 | | | 1 | KAMALI MİL ARKA BİLYA RAYNELİ | THRUST WASHER | 0,60mm | | ♦ | ♦ | | |
| 88 | K21.74183 | | | 1 | KAMALI MİL ARKA BİLYA RAYNELİ | THRUST WASHER | 0,70mm | | ♦ | ♦ | | |
| 88 | K21.04185 | 389 262 3952 | | 1 | KAMALI MİL ARKA BİLYA RAYNELİ | THRUST WASHER | 0,80mm | | ♦ | ♦ | | |
| 88 | K21.06718 | 010 990 8382 | | 1 | KAMALI MİL ARKA BİLYA RAYNELİ | THRUST WASHER | 1,00mm | | ♦ | ♦ | | |
| 89 | K21.04131 | 389 262 3754 | | 1 | KAMALI MİL ARKA BİLYA PULU | THRUST WASHER | 18,00mm | (K) | ♦ | ♦ | | |
| 90 | K21.04331 | 007 994 1841 | (006 994 9941) | 1 | KAMALI MİL ARKA BİLYA SEKMANI | RETAINING RING | 2,50mm | | ♦ | ♦ | | |
| 91 | K21.04192 | 406 337 0252 | | 1 | GRUP MİLİ ÖN BİLYA RAYNELİ | THRUST WASHER | 0,10mm | | ♦ | ♦ | | |
| 91 | K21.04150 | 406 337 0352 | | 1 | GRUP MİLİ ÖN BİLYA RAYNELİ | THRUST WASHER | 0,20mm | | ♦ | ♦ | | |
| 91 | K21.94150 | | | 1 | GRUP MİLİ ÖN BİLYA RAYNELİ | THRUST WASHER | 0,25mm | | ♦ | ♦ | | |
| 91 | K21.04338 | 406 337 0452 | | 1 | GRUP MİLİ ÖN BİLYA RAYNELİ | THRUST WASHER | 0,30mm | | ♦ | ♦ | | |
| 91 | K21.04196 | 389 263 5352 | (389 263 3252) | 1 | GRUP MİLİ ÖN BİLYA RAYNELİ | THRUST WASHER | 0,40mm | | ♦ | ♦ | | |
| 91 | K21.04194 | 389 263 3352 | | 1 | GRUP MİLİ ÖN BİLYA RAYNELİ | THRUST WASHER | 0,45mm | | ♦ | ♦ | | |
| 91 | K21.06719 | 389 263 5652 | | 1 | GRUP MİLİ ÖN BİLYA RAYNELİ | THRUST WASHER | 0,49mm | | ♦ | ♦ | | |
| 91 | K21.04197 | 389 263 5852 | (389 263 3552) | 1 | GRUP MİLİ ÖN BİLYA RAYNELİ | THRUST WASHER | 0,55mm | | ♦ | ♦ | | |
| 91 | K21.04340 | 389 263 6052 | | 1 | GRUP MİLİ ÖN BİLYA RAYNELİ | THRUST WASHER | 0,61mm | | ♦ | ♦ | | |
| 91 | K21.04198 | 389 263 6352 | (389 263 3852) | 1 | GRUP MİLİ ÖN BİLYA RAYNELİ | THRUST WASHER | 0,70mm | | ♦ | ♦ | | |
| 91 | K21.04154 | 389 263 3952 | | 1 | GRUP MİLİ ÖN BİLYA RAYNELİ | THRUST WASHER | 0,75mm | | ♦ | ♦ | | |
| 91 | K21.04199 | 389 263 6852 | | 1 | GRUP MİLİ ÖN BİLYA RAYNELİ | THRUST WASHER | 0,85mm | | ♦ | ♦ | | |
| 91 | K21.04200 | 389 263 7352 | | 1 | GRUP MİLİ ÖN BİLYA RAYNELİ | THRUST WASHER | 1,00mm | | ♦ | ♦ | | |
| 91 | K21.04201 | 389 263 7852 | | 1 | GRUP MİLİ ÖN BİLYA RAYNELİ | THRUST WASHER | 1,15mm | | ♦ | ♦ | | |
| 91 | K21.04202 | 389 263 8352 | | 1 | GRUP MİLİ ÖN BİLYA RAYNELİ | THRUST WASHER | 1,30mm | | ♦ | ♦ | | |
| 92 | K21.03606 | 015 981 9005 | (014 981 1405) | 1 | GRUP MİLİ ÖN BİLYA | ROLLER BEARING | 50,8X100X35mm | | ♦ | ♦ | | |
| | | | (012 981 7405) | | | | | | | | | |
| | | | (012 981 5105) | | | | | | | | | |
| 93 | K21.07029 | 387 994 1541 | | 1 | GRUP MİLİ ÖN BİLYA SEKMANI | RETAINING RING | 2,35mm | | ♦ | ♦ | | |
| 93 | K21.07030 | 387 994 1341 | | 1 | GRUP MİLİ ÖN BİLYA SEKMANI | RETAINING RING | 2,45mm | | ♦ | ♦ | | |
| 93 | K21.07031 | 387 994 1141 | | 1 | GRUP MİLİ ÖN BİLYA SEKMANI | RETAINING RING | 2,55mm | | ♦ | ♦ | | |
| 93 | K21.07032 | 387 994 0941 | | 1 | GRUP MİLİ ÖN BİLYA SEKMANI | RETAINING RING | 2,65mm | | ♦ | ♦ | | |
| 93 | K21.07033 | 387 994 0741 | | 1 | GRUP MİLİ ÖN BİLYA SEKMANI | RETAINING RING | 2,75mm | | ♦ | ♦ | | |
| 93 | K21.07034 | 387 994 0541 | | 1 | GRUP MİLİ ÖN BİLYA SEKMANI | RETAINING RING | 2,85mm | | ♦ | ♦ | | |
| 93 | K21.07035 | 387 994 0341 | | 1 | GRUP MİLİ ÖN BİLYA SEKMANI | RETAINING RING | 2,95mm | | ♦ | ♦ | | |
| 94 | K21.03114 | 389 263 1110 | | 1 | TAKVİYE DİŞLİ KARŞILIĞI 23 DİŞ | CONSTANT GEAR 23 T. | | | ♦ | ♦ | | |
| 95 | K21.03118 | 389 263 1413 | | 1 | 3./4.VİTES DİŞLİ KARŞILIĞI 21/25 DİŞ | DOUBLE GEAR 3rd/4th 21/25 T. | | | ♦ | ♦ | | |
| 96 | K21.03121 | 389 263 0802 | | 1 | GRUP MİLİ 14/17 DİŞ | COUNTER SHAFT 14/17 T. | | | ♦ | ♦ | | |
| 97 | K21.03624 | 016 981 1205 | (012 981 9405) | 1 | GRUP MİLİ ARKA BİLYA | ROLLER BEARING | 60X130X33,8mm | | ♦ | ♦ | | |
| | | | (012 981 9205) | | | | | | | | | |
| 98 | K21.06697 | | | 1 | GRUP MİLİ ARKA BİLYA RAYNELİ | THRUST WASHER | 1,30mm | | ♦ | ♦ | | |
| 98 | K21.04232 | 389 263 5052 | | 1 | GRUP MİLİ ARKA BİLYA RAYNELİ | THRUST WASHER | 1,15mm | | ♦ | ♦ | | |
| 98 | K21.04231 | 389 263 4952 | | 1 | GRUP MİLİ ARKA BİLYA RAYNELİ | THRUST WASHER | 1,10mm | | ♦ | ♦ | | |
| 98 | K21.04230 | 389 263 4852 | | 1 | GRUP MİLİ ARKA BİLYA RAYNELİ | THRUST WASHER | 1,05mm | | ♦ | ♦ | | |
| 98 | K21.04229 | 389 263 4752 | | 1 | GRUP MİLİ ARKA BİLYA RAYNELİ | THRUST WASHER | 1,00mm | | ♦ | ♦ | | |
| 98 | K21.04228 | 389 263 4652 | | 1 | GRUP MİLİ ARKA BİLYA RAYNELİ | THRUST WASHER | 0,95mm | | ♦ | ♦ | | |
| 98 | K21.04227 | 389 263 4552 | | 1 | GRUP MİLİ ARKA BİLYA RAYNELİ | THRUST WASHER | 0,90mm | | ♦ | ♦ | | |
| 98 | K21.04226 | 389 263 4452 | | 1 | GRUP MİLİ ARKA BİLYA RAYNELİ | THRUST WASHER | 0,85mm | | ♦ | ♦ | | |
| 98 | K21.04225 | 389 263 0552 | | 1 | GRUP MİLİ ARKA BİLYA RAYNELİ | THRUST WASHER | 0,80mm | | ♦ | ♦ | | |
| 98 | K21.04224 | 389 263 4352 | | 1 | GRUP MİLİ ARKA BİLYA RAYNELİ | THRUST WASHER | 0,75mm | | ♦ | ♦ | | |
| 98 | K21.04155 | 389 263 4252 | | 1 | GRUP MİLİ ARKA BİLYA RAYNELİ | THRUST WASHER | 0,70mm | | ♦ | ♦ | | |
| 98 | K21.04223 | 389 263 4152 | | 1 | GRUP MİLİ ARKA BİLYA RAYNELİ | THRUST WASHER | 0,65mm | | ♦ | ♦ | | |
| 98 | K21.04153 | 389 263 4052 | | 1 | GRUP MİLİ ARKA BİLYA RAYNELİ | THRUST WASHER | 0,60mm | | ♦ | ♦ | | |
| 98 | K21.06695 | | | 1 | GRUP MİLİ ARKA BİLYA RAYNELİ | THRUST WASHER | 0,55mm | | ♦ | ♦ | | |
| 98 | K21.06692 | | | 1 | GRUP MİLİ ARKA BİLYA RAYNELİ | THRUST WASHER | 0,50mm | | ♦ | ♦ | | |
| 98 | K21.06694 | | | 1 | GRUP MİLİ ARKA BİLYA RAYNELİ | THRUST WASHER | 0,45mm | | ♦ | ♦ | | |

NOTES :
Alfabetic letters are used in conjunction with the encoded parts.

NOTLAR :
Alfabetik harfler ile kodlanan parçalar birlikte kullanılır.





Original parts names, oem numbers, symbols and descriptions used in this catalogue are for reference purposes only.

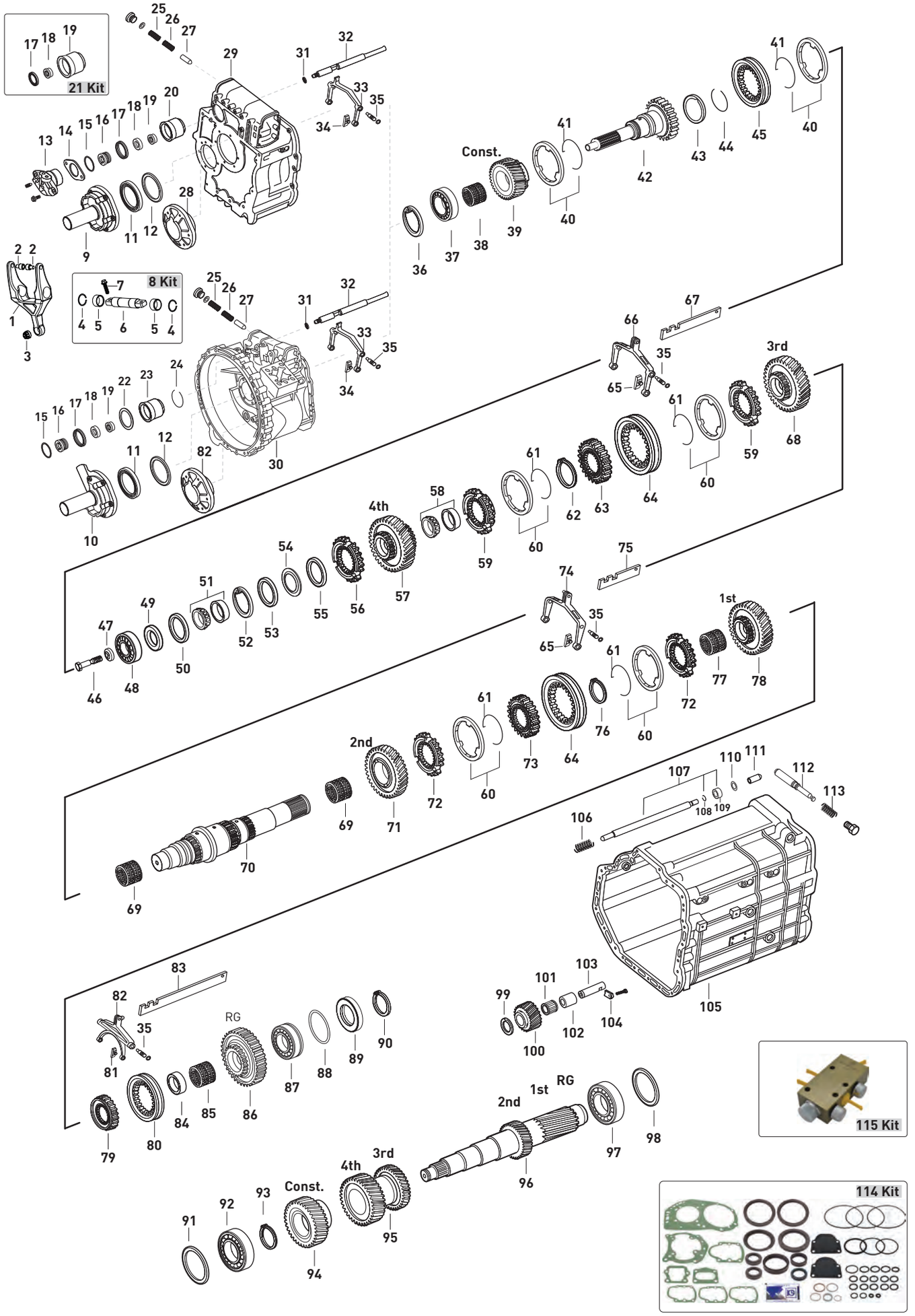




Original parts names, oem numbers, symbols and descriptions used in this catalogue are for reference purposes only.

| Fig. | Kacmaz No | Oem No | Oem Old No | Pcs. | Ürün Tanımı | Description | Sizes | Not | EPS | WSK400+RETARDER |
|---|---|---|---|---|---|---|---|---|---|---|
| 98 | K21.06693 | 389 263 0452 | | 1 | GRUP MİLİ ARKA BİLYA RAYNELİ | THRUST WASHER | 0,40mm | | ♦ | ♦ |
| 98 | K21.04358 | | | 1 | GRUP MİLİ ARKA BİLYA RAYNELİ | THRUST WASHER | 0,30mm | | ♦ | ♦ |
| 98 | K21.04357 | | | 1 | GRUP MİLİ ARKA BİLYA RAYNELİ | THRUST WASHER | 0,20mm | | ♦ | ♦ |
| 98 | K21.04156 | 389 263 0152 | | 1 | GRUP MİLİ ARKA BİLYA RAYNELİ | THRUST WASHER | 0,10mm | | ♦ | ♦ |
| 99 | K21.04209 | 389 263 0062 | | 2 | KÜÇÜK GERİ VİTES PULU | THRUST WASHER | 1,00mm | | ♦ | ♦ |
| 100 | | 389 263 1531 | | 1 | KÜÇÜK GERİ VİTES DİŞLİSİ 18 DİŞ | REVERSE IDLER GEAR 18 T. | | (A) | ♦ | ♦ |
| 100 | | 389 263 0331 | | 1 | KÜÇÜK GERİ VİTES DİŞLİSİ 18 DİŞ | REVERSE IDLER GEAR 18 T. | | (B) | ♦ | ♦ |
| 101 | K21.03838 | 012 981 8910 | (012 981 9010) | 1 | KÜÇÜK GERİ VİTES MASURA BİLYA | NEEDLE CAGE | 42X50X51mm | | ♦ | ♦ |
| | | | (019 981 1310) | | | | | | | |
| 102 | K21.06031 | 389 263 0850 | | 1 | K.GERİ VİTES MASURA BİLYA ÇANAĞI | BUSHING | 18mm | (A) | ♦ | ♦ |
| 102 | | 389 263 0050 | | 1 | K.GERİ VİTES MASURA BİLYA ÇANAĞI | BUSHING | 19mm | (B) | ♦ | ♦ |
| 103 | K21.06037 | 976 263 0030 | (976 263 1230) | 1 | KÜÇÜK GERİ VİTES PİMİ | PIN | | (A) | ♦ | ♦ |
| 103 | | 389 263 0430 | | 1 | KÜÇÜK GERİ VİTES PİMİ | PIN | | (B) | ♦ | ♦ |
| 104 | K21.07010 | 945 263 0041 | | 1 | KÜÇÜK GERİ VİTES PİM KİLİTLEMESİ | KEY | | (A) | ♦ | ♦ |
| 104 | | 389 263 0041 | | 1 | KÜÇÜK GERİ VİTES PİM KİLİTLEMESİ | KEY | | (B) | ♦ | ♦ |
| 105 | | 389 261 2903 | (389 261 3303) | 1 | ŞANZIMAN ORTA GÖVDE | HOUSING | | | ♦ | ♦ |
| 105 | | 655 260 3623 | (389 261 3126) | 1 | ŞANZIMAN ORTA GÖVDE | HOUSING | | | | ♦ |
| 106 | | 389 993 0501 | | 1 | KİLİTLEME MİL YAYI | SPRING | | | ♦ | ♦ |
| 107 | K21.03394 | 389 268 4825 | | 1 | KİLİTLEME MİLİ | SHIFTING ROD | | | ♦ | ♦ |
| 108 | | 007993 012200 | | 1 | KİLİTLEME MİLİ SEKMANI | RETAINING RING | | | ♦ | ♦ |
| 109 | | 389 268 0051 | | 1 | KİLİTLEME MİL BURCU | SPACER RING | | | ♦ | ♦ |
| 110 | | 000988 006019 | | 1 | KİLİTLEME MİLİ AYAR RAYNELİ | FITTED WASHER | 0,10mm | | ♦ | ♦ |
| 110 | | 000988 006020 | | 1 | KİLİTLEME MİLİ AYAR RAYNELİ | FITTED WASHER | 0,20mm | | ♦ | ♦ |
| 110 | | 000988 006021 | | 1 | KİLİTLEME MİLİ AYAR RAYNELİ | FITTED WASHER | 0,30mm | | ♦ | ♦ |
| 110 | | 000988 006013 | | 1 | KİLİTLEME MİLİ AYAR RAYNELİ | FITTED WASHER | 0,50mm | | ♦ | ♦ |
| 110 | | 000988 006001 | | 1 | KİLİTLEME MİLİ AYAR RAYNELİ | FITTED WASHER | 1,00mm | | ♦ | ♦ |
| 111 | K21.03489 | 389 268 0674 | | 1 | KİLİTLEME MİL FİŞEĞİ | PIN | | | ♦ | ♦ |
| 112 | K21.03486 | 389 267 0974 | | 1 | AĞIR SERİ KİLİTLEME MİLİ | PIN | | | ♦ | ♦ |
| 113 | K21.06006 | 389 993 3401 | (389 993 0601) | 1 | AĞIR SERİ KİLİTLEME YAYI | SPRING | | | ♦ | ♦ |
| 114 | K21.03543 | | | Kit | CONTA TAKIMI | GASKET KIT | | | ♦ | ♦ |
| 115 | K21.06851 | 001 260 2057 | (001 260 2657) | 1 | VALF | VALVE | | | ♦ | ♦ |

NOTES :
Alfabetic letters are used in conjunction with the encoded parts.

NOTLAR :
Alfabetik harfler ile kodlanan parçalar birlikte kullanılır.





Original parts names, oem numbers, symbols and descriptions used in this catalogue are for reference purposes only.

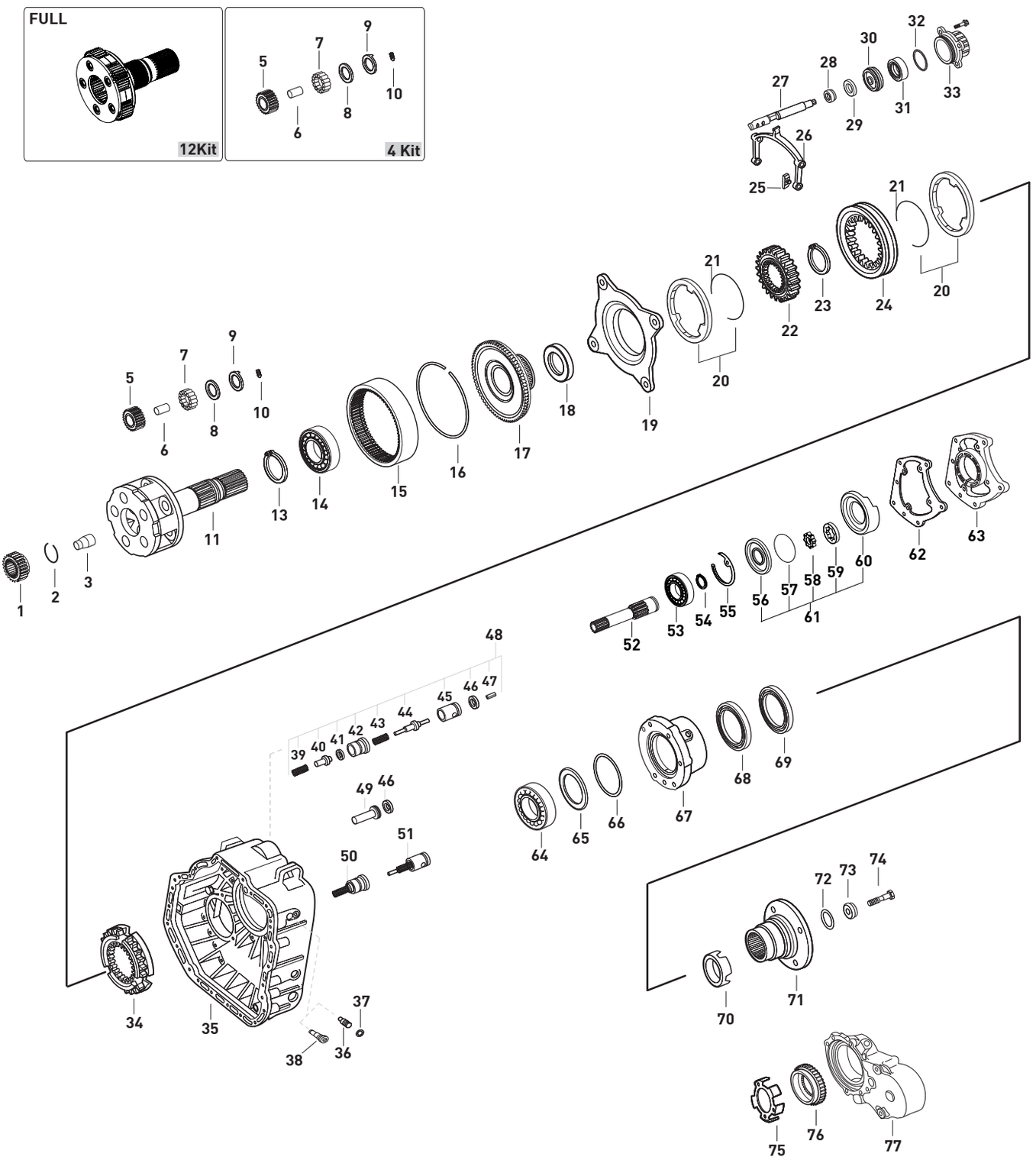




Original parts names, oem numbers, symbols and descriptions used in this catalogue are for reference purposes only.

| Fig. | Kacmaz No | Oem No | Oem Old No | Pcs. | Ürün Tanımı | Description | Sizes | Not | EPS | WSK400+RETARDER | | |
|---|---|---|---|---|---|---|---|---|---|---|---|---|
| 1 | K21.03113 | 389 262 0209 | | 1 | GÜNEŞ DİŞLİ 25 DİŞ | SUN GEAR 25 T. | | | ♦ | ♦ | | |
| 2 | | 007993 040200 | | 1 | ŞANZ.HEYKEL YAĞ BORU SEKMANI | SNAP RING | | | ♦ | ♦ | | |
| 3 | | 389 269 0134 | | 1 | ŞANZ.HEYKEL YAĞ BORUSU | OIL TUBE | | | ♦ | ♦ | | |
| 4 | K21.03123 | 389 260 0497 | | 1 | HEYKEL KOZA DİŞLİ TAKIMI | PLANETARY GEAR SET | | | ♦ | ♦ | | |
| 5 | K21.06034 | 389 262 0906 | | 5 | HEYKEL KOZA DİŞLİ 26 DİŞ | PLANETARY GEAR 26 T. | | | ♦ | ♦ | | |
| 6 | K21.03437 | 389 262 0407 | | 5 | HEYKEL KOZA DİŞLİ PİMİ | PLANETARY GEAR PIN | | | ♦ | ♦ | | |
| 7 | K21.03816 | 000 981 4186 | (000 981 4386) | 125 | HEYKEL KOZA DİŞLİ TANE BİLYA | NEEDLE ROLLER | D5X39,6 | | ♦ | ♦ | | |
| 8 | K21.04074 | 389 262 0162 | (389 262 6462) | 10 | HEYKEL KOZA DİŞLİ PULU | THRUST WASHER | | | ♦ | ♦ | | |
| | | | (389 262 0562) | | | | | | | | | |
| 9 | K21.04075 | 945 262 1162 | (945 262 0162) | 10 | HEYKEL KOZA DİŞLİ PULU | THRUST WASHER | | | ♦ | ♦ | | |
| | | | (389 262 1462) | | | | | | | | | |
| 10 | K21.03418 | 000914 006109 | | 5 | HEYKEL KOZA DİŞLİ VİDASI | THREADED PIN | M6X14 | | ♦ | ♦ | | |
| 11 | K21.03125 | 389 260 9061 | (389 260 8961) | 1 | ŞANZIMAN HEYKELİ (BOŞ) | PLANETARY CARRIER (EMPTY) | | | ♦ | ♦ | | |
| | | | (389 260 7661) | | | | | | | | | |
| | | | (389 260 1361) | | | | | | | | | |
| 12 | K21.03682 | | | Kit | ŞANZIMAN HEYKELİ (DOLU) | PLANETARY CARRIER (FULL) | | | ♦ | ♦ | | |
| 13 | K21.06864 | 000472 130000 | | 1 | ÇEMBER DİŞLİ BİLYA SEKMANI | RETAINING RING | 130X4mm | | ♦ | ♦ | | |
| 14 | K21.03614 | 008 981 1325 | (004 981 8725) | 1 | ÇEMBER DİŞLİ BİLYASI | ROLLER BEARING | 90X130X14mm | | ♦ | ♦ | | |
| | | | (004 981 8825) | | | | | | | | | |
| | | | (004 981 9425) | | | | | | | | | |
| 15 | | 389 262 0408 | | 1 | ÇEMBER DİŞLİ 80 DİŞ | RING WHEEL 80 T. | | | ♦ | ♦ | | |
| 16 | K21.04253 | 389 262 0773 | | 1 | ÇEMBER DİŞLİ SEKMANI | LOCK RING | | | ♦ | ♦ | | |
| 17 | | 389 262 0525 | | 1 | PLANET ÇAN DİŞLİ 80 DİŞ | CARRIER HUB 80 T. | | | ♦ | ♦ | | |
| 18 | K21.04076 | 389 262 0251 | | 1 | ŞANZIMAN HEYKELİ ARA PULU | SPACER RING | | | ♦ | ♦ | | |
| 19 | K21.03018 | 389 260 2036 | | 1 | TABLA SENKROMENÇ | FOLLOWER RING | | | ♦ | ♦ | | |
| 20 | K21.03017 | 389 262 0537 | (389 262 0037) | 2 | AĞIR SERİ FRENLEME (Mo) | SYNCHRONIZING CONE / Mo | | | ♦ | ♦ | | |
| | | | (389 262 0137) | | | | | | | | | |
| | | | (389 262 3337) | | | | | | | | | |
| 20 | K21.03078 | 945 260 0850 | | 2 | AĞIR SERİ FRENLEME (C) | SYNCHRONIZING CONE / C | | | ♦ | ♦ | | |
| 21 | K21.03077 | 389 262 0293 | | 2 | FRENLEME TELİ | SPRING | | | ♦ | ♦ | | |
| 22 | K21.03079 | 389 262 4935 | (389 262 2035) | 1 | AĞIR SERİ YILDIZ DİŞLİ 73 DİŞ | SYNCHRONIZER HUB 73 T. | | | ♦ | ♦ | | |
| | | | (400 262 0335) | | | | | | | | | |
| 23 | K21.04356 | 000471 120000 | | 1 | AĞIR SERİ YILDIZ DİŞLİ SEKMANI | RETAINING RING | | | ♦ | ♦ | | |
| 24 | K21.03028 | 945 262 6623 | (945 262 0823) | 1 | AĞIR SERİ HALKA 73 DİŞ | ENGAGING SLEEVE 73 T. | | | ♦ | ♦ | | |
| | | | (389 262 1623) | | | | | | | | | |
| | | | (389 262 3823) | | | | | | | | | |
| | | | (945 262 2623) | | | | | | | | | |
| 25 | K21.03406 | 389 265 2449 | (945 265 0349) | 2 | AĞIR SERİ HİLAL PABUCU | SLIDING PAD | | | ♦ | ♦ | | |
| | | | (387 265 0049) | | | | | | | | | |
| | | | (389 265 0949) | | | | | | | | | |
| | | | (389 265 1249) | | | | | | | | | |
| 26 | K21.06411 | 947 265 1701 | (389 265 0901) | 1 | AĞIR SERİ HİLALİ | SHIFTING FORK | | | ♦ | ♦ | | |
| | | | (930 265 0001) | | | | | | | | | |
| | | | (947 265 0801) | | | | | | | | | |
| 27 | | 389 267 7217 | (389 267 3917) | 1 | AĞIR SERİ HİLALİ MİLİ | SHIFTING ROD | | MPS | ♦ | ♦ | | |
| 27 | | 389 267 3417 | | 1 | AĞIR SERİ HİLALİ MİLİ | SHIFTING ROD | | EPS | ♦ | ♦ | | |
| 28 | K21.03523 | 000 267 0197 | (000 267 0397) | 1 | AĞIR SERİ HİLAL MİL KEÇESİ | OIL SEAL | 22X32X8mm | | ♦ | ♦ | | |
| 29 | K21.04178 | 387 267 0650 | (387 267 0250) | 1 | AĞIR SERİ HİLAL MİL BURCU | BUSHING | 34X22X8mm | | ♦ | ♦ | | |
| 30 | K21.06975 | 960 267 0818 | (389 267 1018) | 1 | AĞIR SERİ HİLAL MİL PİSTONU | PISTON | | | ♦ | ♦ | | |
| | | | (389 267 0118) | | | | | | | | | |
| 31 | K21.03525 | 024 997 8347 | (020 997 6747) | 1 | AĞIR SERİ SİLİNDİR KEÇESİ | SEAL RING | 77X90X17mm | | ♦ | ♦ | | |
| | | | (014 997 3647) | | | | | | | | | |
| | | | (014 997 5147) | | | | | | | | | |

NOTES :
Parts coded with numbers are used together.

NOTLAR :
Rakamlar ile kodlanan parçalar birlikte kullanılır.





Original parts names, oem numbers, symbols and descriptions used in this catalogue are for reference purposes only.

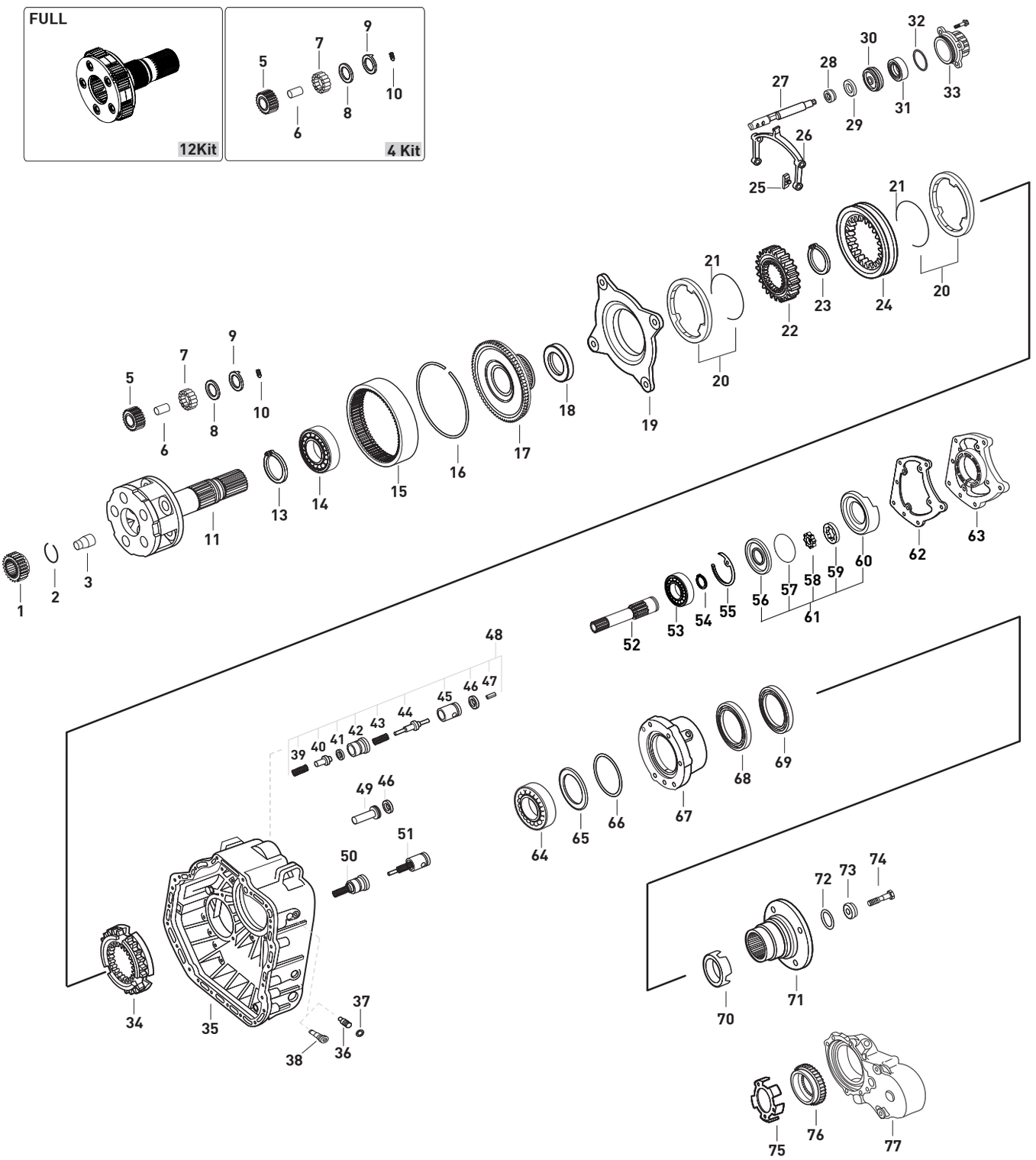




**Original parts names, oem numbers, symbols and descriptions used in this catalogue are for reference purposes only.**

| Fig. | Kacmaz No | Oem No | Oem Old No | Pcs. | Ürün Tanımı | Description | Sizes | Not | EPS | WSK400+RETARDER | | |
|---|---|---|---|---|---|---|---|---|---|---|---|---|
| 32 | K21.06399 | 013 997 7548 | | 1 | AĞIR SERİ SİLİNDİR ORİNGİ | O-RING | 89,5X3mm | | ♦ | ♦ | | |
| 33 | K21.06469 | 389 267 1419 | | 1 | AĞIR SERİ SİLİNDİRİ | SHIFTING CYLINDER | | | ♦ | ♦ | | |
| 34 | K21.03022 | 389 262 9134 | | 1 | SERİ SENKROMENÇ | ENGAGING RING | | (1) | ♦ | ♦ | | |
| 34 | K21.03020 | 389 262 4034 | | 1 | SERİ SENKROMENÇ | ENGAGING RING | | (2) | ♦ | ♦ | | |
| 35 | | 389 261 5126 | (389 261 4926) | 1 | ŞANZIMAN ARKA GÖVDE | HOUSING | | (1) | ♦ | ♦ | | |
| 35 | | 389 261 4603 | (389 261 2703) | 1 | ŞANZIMAN ARKA GÖVDE | HOUSING | | (2) | ♦ | ♦ | | |
| 36 | | 389 265 0974 | | 2 | AĞIR SERİ HİLAL CİVATASI | PIN | | (2) | ♦ | ♦ | | |
| 37 | K21.04212 | 013 997 0048 | (020 997 8248) | 2 | HİLAL CİVATA ORİNGİ | O-RING | 19,2X3mm | (2) | ♦ | ♦ | | |
| 38 | K21.06026 | 945 265 3074 | (945 265 1474) | 2 | AĞIR SERİ HİLAL CİVATASI | PIN | | (1) | ♦ | ♦ | | |
| | | | (945 265 1774) | | | | | | | | | |
| | | | (945 265 2674) | | | | | | | | | |
| 39 | | 389 993 5301 | | 1 | YAĞ BASINÇ YAYI | SPRING | | | ♦ | ♦ | | |
| 40 | | 389 269 1026 | (389 269 0926) | 1 | YAĞ BASINÇ VALFİ | SELECTOR VALVE | | | ♦ | ♦ | | |
| 41 | K21.04210 | 013 997 0148 | (020 997 8348) | 1 | YAĞ BASINÇ ORİNGİ | O-RING | 13,3X2,4mm | | ♦ | ♦ | | |
| 42 | | 389 269 1444 | (389 269 0744) | 1 | YAĞ BASINÇ VALF GÖVDESİ | VALVE INSERT | | | ♦ | ♦ | | |
| 43 | | 389 993 4401 | | 1 | YAĞ BASINÇ VALF MİL YAYI | SPRING | 11,5X41,9X1mm | | ♦ | ♦ | | |
| 44 | | 389 269 0826 | | 1 | YAĞ BASINÇ VALF MİLİ | SELECTOR VALVE | | | ♦ | ♦ | | |
| 45 | | 389 269 0844 | | 1 | YAĞ BASINÇ VALF TOPU | BALL | | | ♦ | ♦ | | |
| 46 | K21.04212 | 013 997 0048 | (020 997 8248) | 1 | YAĞ BASINÇ VALF ORİNGİ | O-RING | 19,2X3mm | | ♦ | ♦ | | |
| 47 | | 001481 004049 | (001481 004001) | 1 | EMNİYET PİMİ | CLAMPING SLEEVE | | | ♦ | ♦ | | |
| 48 | K21.06962 | 655 260 0157 | | Kit | YAĞ BASINÇ VALFİ KOMPLE | VALVE KIT | | | ♦ | ♦ | | |
| 49 | K21.06979 | 389 265 0176 | (389 265 0076) | 1 | YAĞ BASINÇ VALFİ ALIN FİBERİ | WASHER | | | ♦ | ♦ | | |
| 50 | K21.06953 | 960 260 1057 | | Kit | YAĞ BASINÇ VALFİ KOMPLE | VALVE KIT | | | ♦ | ♦ | | |
| 51 | K21.06973 | 960 260 1257 | | Kit | YAĞ BASINÇ VALFİ KOMPLE | VALVE KIT | | | ♦ | ♦ | | |
| 52 | K21.03085 | 947 264 0005 | (389 269 0310) | 1 | YAĞ POMPA MİLİ | OIL PUMP SHAFT | | | ♦ | ♦ | | |
| | | | (389 269 1210) | | | | | | | | | |
| 53 | K21.03613 | 004 981 9225 | (004 981 8625) | 1 | YAĞ POMPA MİL BİLYASI | ROLLER BEARING | 45X75X16mm | | ♦ | ♦ | | |
| | | | (004 981 9025) | | | | | | | | | |
| 54 | K21.06964 | 000471 045000 | (003 994 3741) | 1 | PTO MİL BİLYA SEKMANI | RETAINING RING | 1,75mm | | ♦ | ♦ | | |
| 55 | K21.94304 | | | 1 | YAĞ POMPA PULU | SPACER WASHER | 0,70mm | | ♦ | ♦ | | |
| 55 | K21.04304 | 389 262 6254 | | 1 | YAĞ POMPA PULU | SPACER WASHER | 0,80mm | | ♦ | ♦ | | |
| 55 | K21.04303 | 389 262 5954 | | 1 | YAĞ POMPA PULU | SPACER WASHER | 0,90mm | | ♦ | ♦ | | |
| 55 | K21.04302 | 389 262 5754 | | 1 | YAĞ POMPA PULU | SPACER WASHER | 1,00mm | | ♦ | ♦ | | |
| 55 | K21.04301 | 389 262 5554 | | 1 | YAĞ POMPA PULU | SPACER WASHER | 1,10mm | | ♦ | ♦ | | |
| 55 | K21.04305 | 389 262 5354 | | 1 | YAĞ POMPA PULU | SPACER WASHER | 1,20mm | | ♦ | ♦ | | |
| 56 | K21.03412 | 945 269 0201 | (389 269 2501) | 1 | YAĞ POMPA KAPAĞI | OIL PUMP COVER | | | ♦ | ♦ | | |
| 57 | K21.03511 | 029 997 5748 | | 1 | YAĞ POMPA KAPAK ORİNGİ | O-RING | 112X2,5mm | | ♦ | ♦ | | |
| 58 | K21.03413 | 389 269 1406 | (389 269 1506) | 1 | YAĞ POMPA İÇ ROTOR | OIL PUMP GEAR | | | ♦ | ♦ | | |
| | | | (945 260 0090) | | | | | | | | | |
| 59 | K21.03414 | 389 269 0706 | (389 269 1206) | 1 | YAĞ POMPA DIŞ ROTOR | ROTOR | | | ♦ | ♦ | | |
| 60 | K21.03415 | 389 269 3801 | | 1 | YAĞ POMPA GÖVDESİ | OIL PUMP HOUSING | | | ♦ | ♦ | | |
| 61 | K21.03411 | 389 260 0690 | (389 260 0590) | 1 | YAĞ POMPASI | OIL PUMP | | | ♦ | ♦ | | |
| 62 | K21.06587 | 389 261 1980 | (389 261 1480) | 1 | PTO KAPAK CONTASI | GASKET | | | ♦ | ♦ | | |
| 62 | K21.03667 | 945 261 0680 | (945 261 0580) | 1 | PTO KAPAK CONTASI | GASKET | | | ♦ | ♦ | | |
| | | | (945 261 0080) | | | | | | | | | |
| 63 | K21.06260 | 389 261 2433 | (389 261 2333) | 1 | PTO KAPAĞI | COVER | | | ♦ | ♦ | | |
| | | | (389 261 0933) | | | | | | | | | |
| 64 | K21.03617 | 004 981 9325 | (004 981 8925) | 1 | ŞANZIMAN ARKA BİLYA | ROLLER BEARING | 85X150X28mm | | ♦ | ♦ | | |
| | | | (004 981 8525) | | | | | | | | | |
| 65 | K21.04077 | 389 262 3954 | | 1 | ŞANZIMAN HEYKEL AYAR PULU | THRUST WASHER | 3,50mm | | ♦ | ♦ | | |
| 66 | K21.04081 | 389 262 7754 | | 1 | ŞANZIMAN HEYKELİ AYAR PULU | THRUST WASHER | 1,40mm | | ♦ | ♦ | | |
| 66 | K21.04139 | 389 262 5152 | | 1 | ŞANZIMAN HEYKELİ AYAR PULU | THRUST WASHER | 0,80mm | | ♦ | ♦ | | |
| 66 | K21.04080 | 389 262 5052 | | 1 | ŞANZIMAN HEYKELİ AYAR PULU | THRUST WASHER | 0,40mm | | ♦ | ♦ | | |

NOTES :
Parts coded with numbers are used together.

NOTLAR :
Rakamlar ile kodlanan parçalar birlikte kullanılır.





Original parts names, oem numbers, symbols and descriptions used in this catalogue are for reference purposes only.

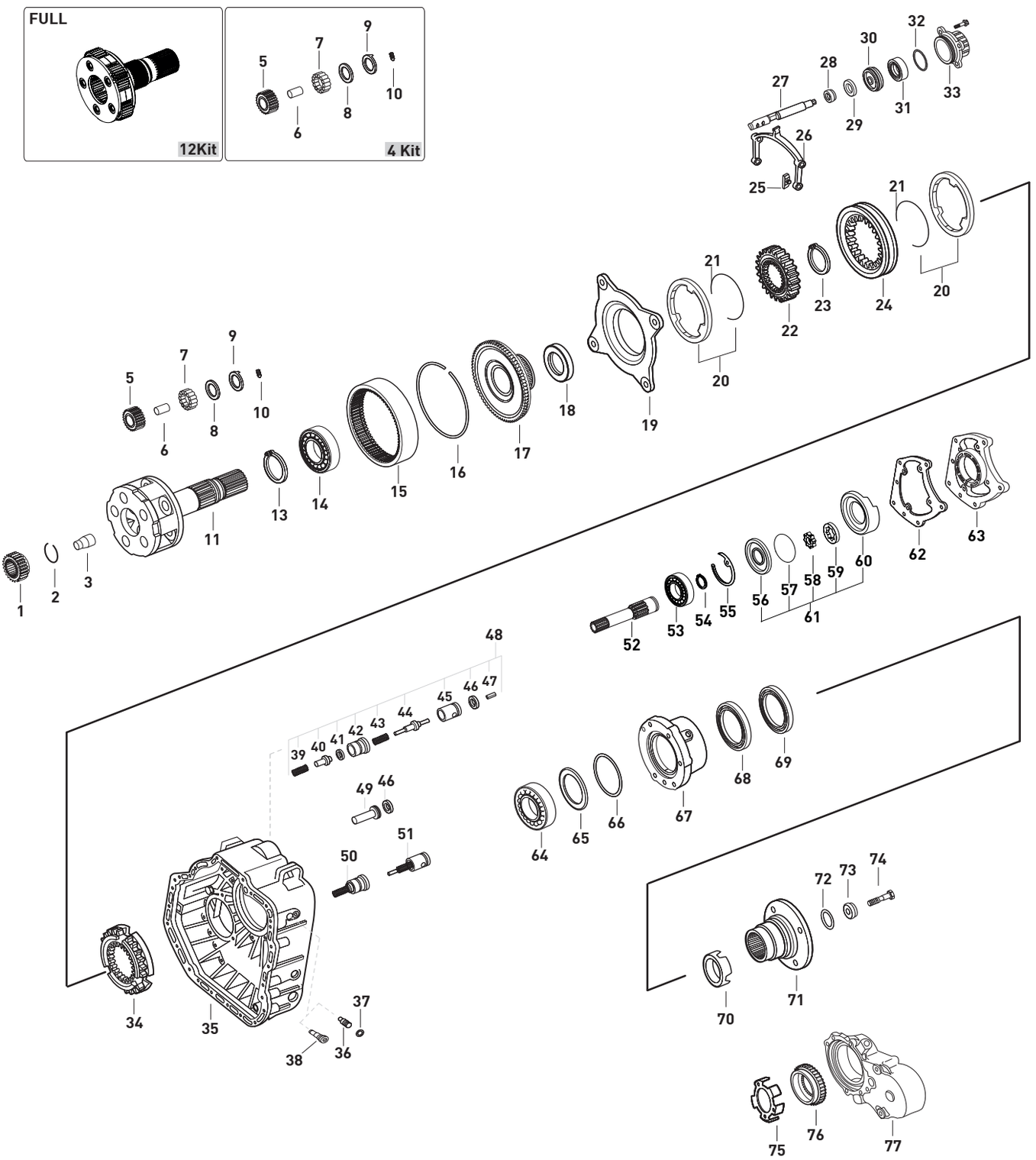




**Original parts names, oem numbers, symbols and descriptions used in this catalogue are for reference purposes only.**

| Fig. | Kacmaz No | Oem No | Oem Old No | Pcs. | Ürün Tanımı | Description | Sizes | Not | EPS | WSK400+RETARDER |
|---|---|---|---|---|---|---|---|---|---|---|
| 66 | K21.04079 | 389 262 7654 | | 1 | ŞANZIMAN HEYKELİ AYAR PULU | THRUST WASHER | 0,25mm | | ♦ | ♦ |
| 66 | K21.04140 | 389 262 4952 | | 1 | ŞANZIMAN HEYKELİ AYAR PULU | THRUST WASHER | 0,20mm | | ♦ | ♦ |
| 66 | K21.04141 | 389 262 4852 | | 1 | ŞANZIMAN HEYKELİ AYAR PULU | THRUST WASHER | 0,15mm | | ♦ | ♦ |
| 66 | K21.04078 | 389 262 4752 | | 1 | ŞANZIMAN HEYKELİ AYAR PULU | THRUST WASHER | 0,10mm | | ♦ | ♦ |
| 67 | K21.06237 | 389 261 0420 | (389 261 0520) | 1 | ŞANZIMAN ARKA KAPAK | COVER | | | ♦ | ♦ |
| 68 | K21.03507 | 013 997 7347 | (015 997 4247) | 1 | ŞANZIMAN ARKA KEÇE | OIL SEAL | 95X115X13/12mm | | ♦ | ♦ |
| | | | (013 997 5647) | | | | | | | |
| 69 | K21.03528 | 013 997 7247 | (014 997 1947) | 1 | ŞANZIMAN ARKA KEÇE | OIL SEAL | 95X115X13mm | | ♦ | ♦ |
| | | | (013 997 5547) | | | | | | | |
| 70 | | 945 262 0528 | (389 260 0150) | 1 | ŞANZIMAN KM DEVİR SACI | PULSE STAR | | | ♦ | ♦ |
| 71 | K21.03084 | 389 262 0445 | | 1 | ŞANZIMAN FLANŞI | COMPANION FLANGE | 4-H, Ø180mm | | ♦ | ♦ |
| 72 | K21.04310 | 014 997 5148 | (020 997 8648) | 1 | ŞANZIMAN FLANŞ ORİNGİ | O-RING | 72,4X5,3mm | | ♦ | ♦ |
| 73 | K21.06977 | 389 262 0362 | (945 262 0062) | 1 | ŞANZIMAN FLANŞI ALIN PULU | THRUST WASHER | 95X24mm | | ♦ | ♦ |
| 74 | K21.06028 | 945 990 0019 | (389 990 2019) | 1 | ŞANZIMAN FLANŞI ALIN VİDASI | SCREW | M24X2X85 | | ♦ | ♦ |
| | | | (389 990 0219) | | | | | | ♦ | ♦ |
| 75 | K21.04083 | 387 262 0828 | (387 262 0428) | 1 | ŞANZIMAN KM DEVİR SACI | PULSE STAR | | | ♦ | ♦ |
| 76 | | 389 264 0021 | (945 264 0121) | 1 | ŞANZIMAN KM DİŞLİSİ 64 DİŞ | GEAR 64 T. | | | ♦ | ♦ |
| 77 | K21.06279 | 389 261 1120 | | 1 | ŞANZIMAN ARKA KAPAK | COVER | | | ♦ | ♦ |

NOTES :
Parts coded with numbers are used together.

NOTLAR :
Rakamlar ile kodlanan parçalar birlikte kullanılır.





Original parts names, oem numbers, symbols and descriptions used in this catalogue are for reference purposes only.

SYNCHRONIZER KIT CONST.

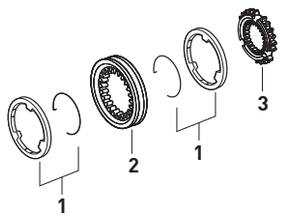


| Fig. | Kacmaz No. | Oem No | Oem Old No | Pcs. | Ürün Tanımı | Description |
|---|---|---|---|---|---|---|
| | K21.06190 | | | Kit | TAK.SENKROMENÇ KİT | SYNCHRONIZER KIT Const |
| 1 | K21.03015 | 389 262 0637 | (387 262 0837) | 2 | TAKVİYE FRENLEME (Mo) | SYNCHRONIZING CONE / Mo |
| 2 | K21.03011 | 389 262 3023 | (389 262 2223) | 1 | TAKVİYE HALKA | ENGAGING SLEEVE |
| | | | (389 262 0623) | | | |
| 3 | K21.03012 | 389 262 5634 | (389 262 3934) | 1 | TAKVİYE SENKROMENÇ | ENGAGING RING |

SYNCHRONIZER KIT 3rd/4th

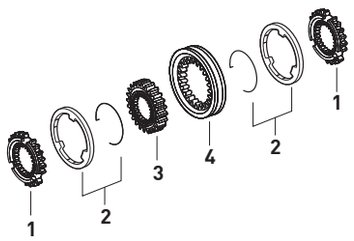


| Fig. | Kacmaz No. | Oem No | Oem Old No | Pcs. | Ürün Tanımı | Description |
|---|---|---|---|---|---|---|
| | K21.06207 | | | Kit | 3./4.VİTES SENK.KİT | SYNCH.KIT 3rd/4th |
| 1 | K21.03027 | 945 262 0534 | (389 262 5034) | 2 | 3./4.VİTES SENKROMENÇ | ENGAGING RING |
| 2 | K21.03016 | 389 262 0737 | (387 262 0937) | 2 | 3./4.VİT.FRENLEME (Mo) | SYNCHRONIZING CONE / Mo |
| 3 | K21.03100 | 389 262 1535 | | 1 | 3./4.VİTES YILDIZ DİŞLİ | SYNCHRONIZER HUB |
| 4 | K21.03010 | 389 262 2923 | (389 262 0723) | 1 | 3./4.VİTES HALKA | ENGAGING SLEEVE |

SYNCHRONIZER KIT 3rd/4th

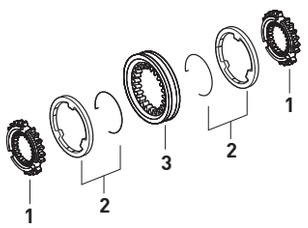


| Fig. | Kacmaz No. | Oem No | Oem Old No | Pcs. | Ürün Tanımı | Description |
|---|---|---|---|---|---|---|
| | K21.96207 | | | Kit | 3./4.VİTES SENK.KİT | SYNCH.KIT 3rd/4th |
| 1 | K21.03027 | 945 262 0534 | (389 262 5034) | 2 | 3./4.VİTES SENKROMENÇ | ENGAGING RING |
| 2 | K21.03016 | 389 262 0737 | (387 262 0937) | 2 | 3./4.VİT.FRENLEME (Mo) | SYNCHRONIZING CONE / Mo |
| 3 | K21.03010 | 389 262 2923 | (389 262 0723) | 1 | 3./4.VİTES HALKA | ENGAGING SLEEVE |

SYNCHRONIZER KIT 1st/2nd

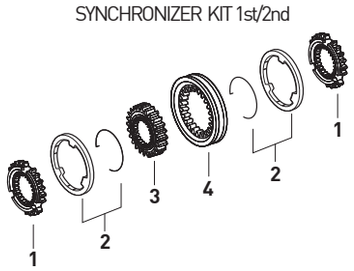


| Fig. | Kacmaz No. | Oem No | Oem Old No | Pcs. | Ürün Tanımı | Description |
|---|---|---|---|---|---|---|
| | K21.06192 | | | Kit | 1./2.VİTES SENK.KİT | SYNCH.KIT 1st/2nd |
| 1 | K21.03025 | 945 262 0434 | (389 262 0034) | 2 | 1./2.VİTES SENKROMENÇ | ENGAGING RING |
| 2 | K21.03016 | 389 262 0737 | (387 262 0937) | 2 | 1./2.VİT.FRENLEME (Mo) | SYNCHRONIZING CONE / Mo |
| 3 | K21.03056 | 389 262 0035 | | 1 | 1./2.VİTES YILDIZ DİŞLİ | SYNCHRONIZER HUB |
| 4 | K21.03010 | 389 262 2923 | (389 262 0723) | 1 | 1./2.VİTES HALKA | ENGAGING SLEEVE |

SYNCHRONIZER KIT 1st/2nd

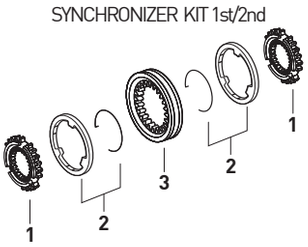


| Fig. | Kacmaz No. | Oem No | Oem Old No | Pcs. | Ürün Tanımı | Description |
|---|---|---|---|---|---|---|
| | K21.96192 | | | Kit | 1./2.VİTES SENK.KİT | SYNCH.KIT 1st/2nd |
| 1 | K21.03025 | 945 262 0434 | (389 262 0034) | 2 | 1./2.VİTES SENKROMENÇ | ENGAGING RING |
| 2 | K21.03016 | 389 262 0737 | (387 262 0937) | 2 | 1./2.VİT.FRENLEME (Mo) | SYNCHRONIZING CONE / Mo |
| 3 | K21.03010 | 389 262 2923 | (389 262 0723) | 1 | 1./2.VİTES HALKA | ENGAGING SLEEVE |



**Original parts names, oem numbers, symbols and descriptions used in this catalogue are for reference purposes only.**

| Fig. | Kacmaz No. | Oem No | Oem Old No | Pcs. | Ürün Tanımı | Description |
|---|---|---|---|---|---|---|
| | K21.06193 | | | Kit | AĞIR SERİ.SENK.KİT | SYNCH.KIT PLANETARY |
| 1 | K21.03018 | 389 260 2036 | | 1 | TABLA SENKROMENÇ | FOLLOWER RING |
| 2 | K21.03017 | 389 262 0537 | (389 262 0037) | 2 | AĞIR SERİ FRENLEME (Mo) | SYNCHRONIZING CONE / Mo |
| 3 | K21.03079 | 389 262 4935 | (389 262 2035) | 1 | A.SERİ YILDIZ DİŞLİ 73 DİŞ | SYNCHRONIZER HUB 73 T. |
| 4 | K21.03028 | 945 262 6623 | (945 262 0823) | 1 | AĞIR SERİ HALKA 73 DİŞ | ENGAGING SLEEVE 73 T. |
| | | | (389 262 1623) | | | |
| | | | (389 262 3823) | | | |
| 5 | K21.03406 | 389 265 2449 | (389 265 1249) | 2 | A.SERİ HİLAL PABUCU | SLIDING PAD |
| 6 | K21.03022 | 389 262 9134 | | 1 | SERİ SENKROMENÇ | ENGAGING RING |

SYNCHRONIZER KIT PLANETARY

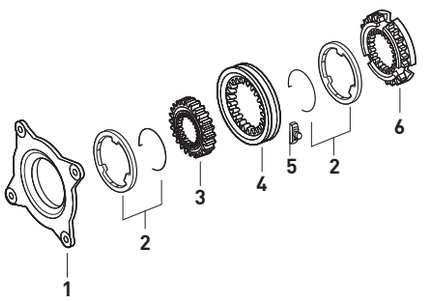


| Fig. | Kacmaz No. | Oem No | Oem Old No | Pcs. | Ürün Tanımı | Description |
|---|---|---|---|---|---|---|
| | K21.06435 | | | Kit | AĞIR SERİ.SENK.KİT | SYNCH.KIT PLANETARY |
| 1 | K21.03018 | 389 260 2036 | | 1 | TABLA SENKROMENÇ | FOLLOWER RING |
| 2 | K21.03017 | 389 262 0537 | (389 262 0037) | 2 | AĞIR SERİ FRENLEME (Mo) | SYNCHRONIZING CONE / Mo |
| 3 | K21.03028 | 945 262 6623 | (945 262 0823) | 1 | AĞIR SERİ HALKA 73 DİŞ | ENGAGING SLEEVE 73 T. |
| | | | (389 262 1623) | | | |
| | | | (389 262 3823) | | | |
| 4 | K21.03406 | 389 265 2449 | (389 265 1249) | 2 | A.SERİ HİLAL PABUCU | SLIDING PAD |
| 5 | K21.03022 | 389 262 9134 | | 1 | SERİ SENKROMENÇ | ENGAGING RING |

SYNCHRONIZER KIT PLANETARY

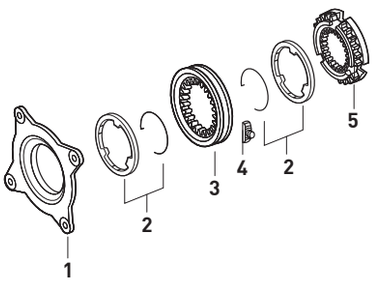


| Fig. | Kacmaz No. | Oem No | Oem Old No | Pcs. | Ürün Tanımı | Description |
|---|---|---|---|---|---|---|
| | K21.06194 | | | Kit | AĞIR SERİ.SENK.KİT | SYNCH.KIT PLANETARY |
| 1 | K21.03017 | 389 262 0537 | (389 262 0037) | 2 | AĞIR SERİ FRENLEME (Mo) | SYNCHRONIZING CONE / Mo |
| 2 | K21.03079 | 389 262 4935 | (389 262 2035) | 1 | A.SERİ YILDIZ DİŞLİ 73 DİŞ | SYNCHRONIZER HUB 73 T. |
| 3 | K21.03028 | 945 262 6623 | (945 262 0823) | 1 | AĞIR SERİ HALKA 73 DİŞ | ENGAGING SLEEVE 73 T. |
| | | | (389 262 1623) | | | |
| | | | (389 262 3823) | | | |
| 4 | K21.03406 | 389 265 2449 | (389 265 1249) | 2 | A.SERİ HİLAL PABUCU | SLIDING PAD |

SYNCHRONIZER KIT PLANETARY

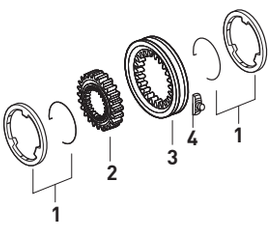


| Fig. | Kacmaz No. | Oem No | Oem Old No | Pcs. | Ürün Tanımı | Description |
|---|---|---|---|---|---|---|
| | K21.06195 | | | Kit | AĞIR SERİ.SENK.KİT | SYNCH.KIT PLANETARY |
| 1 | K21.03018 | 389 260 2036 | | 1 | TABLA SENKROMENÇ | FOLLOWER RING |
| 2 | K21.03017 | 389 262 0537 | (389 262 0037) | 2 | AĞIR SERİ FRENLEME (Mo) | SYNCHRONIZING CONE / Mo |
| 3 | K21.03079 | 389 262 4935 | (389 262 2035) | 1 | A.SERİ YILDIZ DİŞLİ 73 DİŞ | SYNCHRONIZER HUB 73 T. |
| 4 | K21.03028 | 945 262 6623 | (945 262 0823) | 1 | AĞIR SERİ HALKA 73 DİŞ | ENGAGING SLEEVE 73 T. |
| | | | (389 262 1623) | | | |
| | | | (389 262 3823) | | | |
| 5 | K21.03406 | 389 265 2449 | (389 265 1249) | 2 | A.SERİ HİLAL PABUCU | SLIDING PAD |
| 6 | K21.03020 | 389 262 4034 | | 1 | SERİ SENKROMENÇ | ENGAGING RING |

SYNCHRONIZER KIT PLANETARY

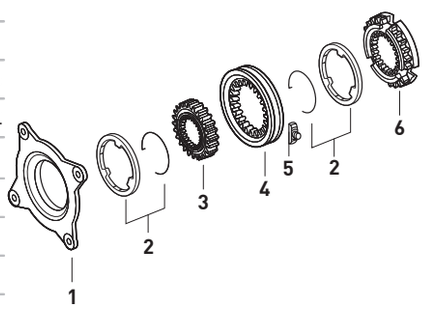


| Fig. | Kacmaz No. | Oem No | Oem Old No | Pcs. | Ürün Tanımı | Description |
|---|---|---|---|---|---|---|
| | K21.06434 | | | Kit | AĞIR SERİ.SENK.KİT | SYNCH.KIT PLANETARY |
| 1 | K21.03018 | 389 260 2036 | | 1 | TABLA SENKROMENÇ | FOLLOWER RING |
| 2 | K21.03017 | 389 262 0537 | (389 262 0037) | 2 | AĞIR SERİ FRENLEME (Mo) | SYNCHRONIZING CONE / Mo |
| 3 | K21.03028 | 945 262 6623 | (945 262 0823) | 1 | AĞIR SERİ HALKA 73 T. | ENGAGING SLEEVE 73 T. |
| | | | (389 262 1623) | | | |
| | | | (389 262 3823) | | | |
| 4 | K21.03406 | 389 265 2449 | (389 265 1249) | 2 | A.SERİ HİLAL PABUCU | SLIDING PAD |
| 5 | K21.03020 | 389 262 4034 | | 1 | SERİ SENKROMENÇ | ENGAGING RING |

SYNCHRONIZER KIT PLANETARY

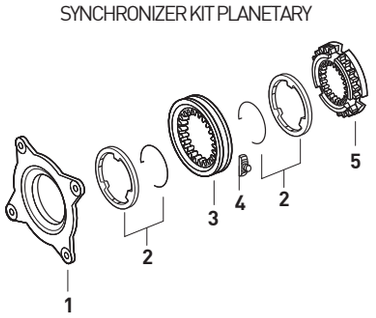




Original parts names, oem numbers, symbols and descriptions used in this catalogue are for reference purposes only.

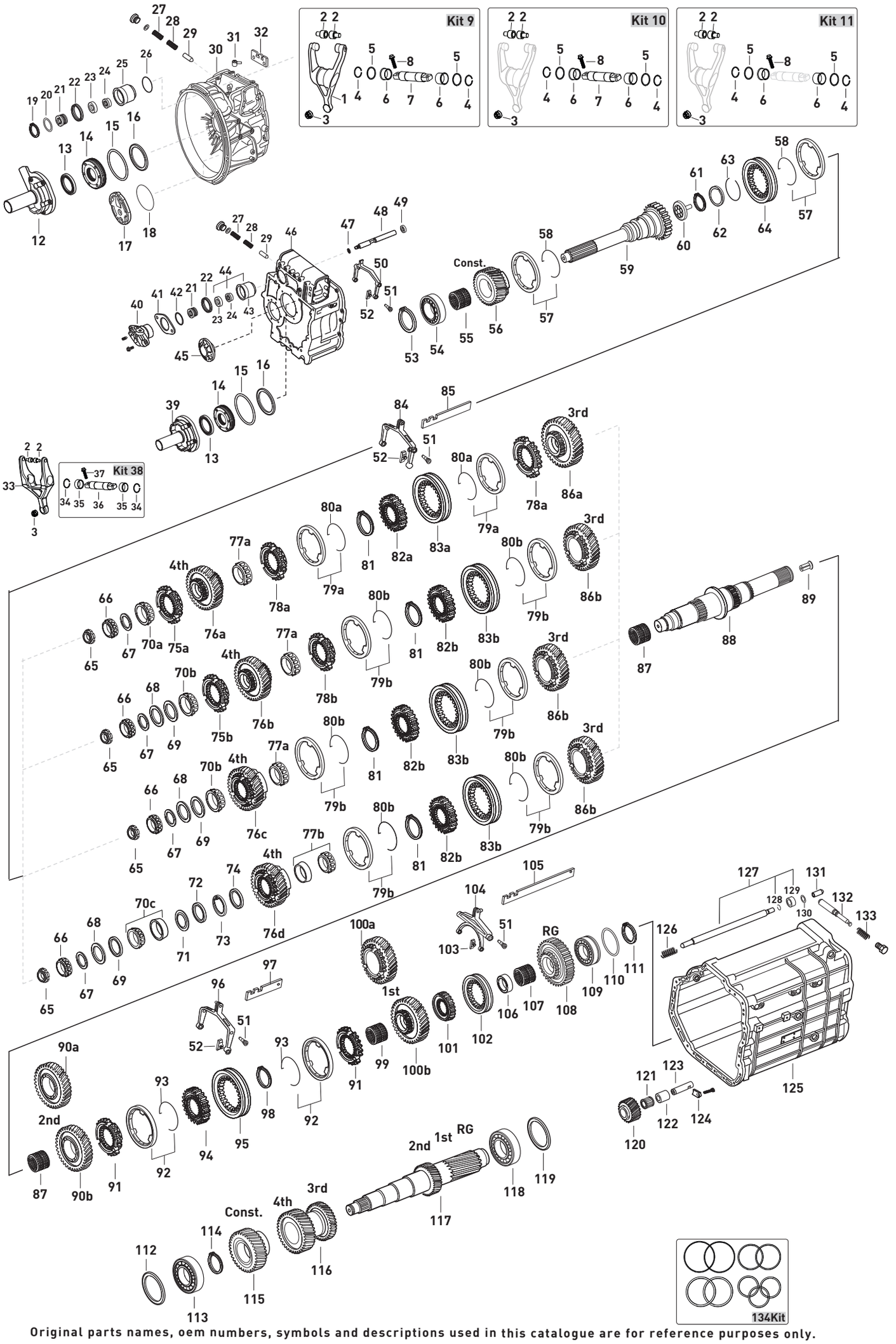


Original parts names, oem numbers, symbols and descriptions used in this catalogue are for reference purposes only.

| Fig. | Kacmaz No | Oem No | Oem Old No | Pcs. | Ürün Tanımı | Description | Sizes | Not | 715240 | 715241 | 715242 | 715252 | 715253 | 715500 | 715501 | 715504 |
|---|---|---|---|---|---|---|---|---|---|---|---|---|---|---|---|---|
| 1 | | 655 250 1513 | | 1 | DEBRİYAJ ÇATALI | RELEASE FORK | | | | | | | | ♦ | ♦ | ♦ |
| 2 | K21.07038 | 000 254 0017 | | 2 | DEBRİYAJ ÇATAL BURÇ VE PİMİ | CAM ROLLER | | | | | | | | ♦ | ♦ | ♦ |
| 3 | K21.07040 | 000 254 0335 | | 1 | DEBRİYAJ ÇATAL PLASTİK BURCU | PLASTIC BUSHING | | | | | | | | ♦ | ♦ | ♦ |
| 4 | | 912009 035100 | | 2 | DEBRİYAJ ÇATAL MİL SEKMANI | RETAINING RING | | | | | | | | ♦ | ♦ | ♦ |
| 5 | | 000988 036100 | | 2 | DEBRİYAJ ÇATAL MİL AYAR PULU | WASHER | | | | | | | | ♦ | ♦ | ♦ |
| 6 | | 002 992 1501 | | 2 | DEBRİYAJ ÇATAL MİL BURCU | BUSHING | | | | | | | | ♦ | ♦ | ♦ |
| 7 | | 655 254 0206 | | 1 | DEBRİYAJ ÇATAL MİLİ | SHAFT | | | | | | | | ♦ | ♦ | ♦ |
| 8 | | 910105 012026 | | 2 | DEBRİYAJ ÇATAL MİL VİDASI | SCREW | M12X40mm | | | | | | | ♦ | ♦ | ♦ |
| 9 | K21.07036 | 655 250 1813 | | Kit | DEBRİYAJ ÇATALI KOMPLE | RELEASE FORK COMPLETE | | | | | | | | ♦ | ♦ | ♦ |
| 9 | K21.97036 | 655 250 1813-S | | Kit | DEB.ÇATALI KOMPLE (BİLYALI TİP) | RELEASE FORK COMPLETE | | WITH BEARING | | | | | | ♦ | ♦ | ♦ |
| 10 | K21.07037 | | | Kit | DEBRİYAJ ÇATALI TAMİR TAKIMI | RELEASE FORK REPAIR KIT | | | | | | | | ♦ | ♦ | ♦ |
| 11 | K21.07039 | | | Kit | DEBRİYAJ ÇATALI TAMİR TK.MİLSİZ | RELEASE FORK REPAIR KIT | | W/OUT SHAFT | | | | | | ♦ | ♦ | ♦ |
| 12 | K21.03429 | 945 261 1118 | (945 261 0118) | 1 | PRİZDİREK KEÇE KAPAĞI | COVER | | | | | | | | ♦ | ♦ | ♦ |
| | | | (945 261 0818) | | | | | | | | | | | | | |
| 13 | K21.03509 | 019 997 0547 | (023 997 7847) | 1 | PRİZDİREK KEÇESİ | OIL SEAL | 56X72X8mm | | ♦ | ♦ | ♦ | ♦ | ♦ | ♦ | ♦ | ♦ |
| | | | (019 997 0647) | | | | | | | | | | | | | |
| | | | (022 997 8547) | | | | | | | | | | | | | |
| 14 | K21.06038 | 389 261 0665 | (389 261 0765) | 1 | YAĞ TUTUCU DİSK | OIL BAFFLE | 75X16mm | | ♦ | ♦ | ♦ | ♦ | ♦ | ♦ | ♦ | ♦ |
| | | | (389 261 0865) | | | | | | | | | | | | | |
| 15 | K21.06635 | 020 997 7848 | | 1 | PRİZDİREK KEÇE KAPAK ORİNGİ | O-RING | 138X3mm | | ♦ | ♦ | ♦ | ♦ | ♦ | ♦ | ♦ | ♦ |
| 15 | K21.06712 | 028 997 2248 | (019 997 7248) | 1 | PRİZDİREK KEÇE KAPAK ORİNGİ | O-RING | 140X3mm | | ♦ | ♦ | ♦ | ♦ | ♦ | ♦ | ♦ | ♦ |
| 16 | K21.04162 | 389 262 4152 | (389 262 0955) | 1 | PRİZDİREK AYAR RAYNELİ | THRUST WASHER | 0,10mm | | ♦ | ♦ | ♦ | ♦ | ♦ | ♦ | ♦ | ♦ |
| 16 | K21.04243 | 389 262 0855 | | 1 | PRİZDİREK AYAR RAYNELİ | THRUST WASHER | 0,15mm | | ♦ | ♦ | ♦ | ♦ | ♦ | ♦ | ♦ | ♦ |
| 16 | K21.04151 | 389 262 0755 | | 1 | PRİZDİREK AYAR RAYNELİ | THRUST WASHER | 0,20mm | | ♦ | ♦ | ♦ | ♦ | ♦ | ♦ | ♦ | ♦ |
| 16 | K21.06715 | 389 262 3055 | | 1 | PRİZDİREK AYAR RAYNELİ | THRUST WASHER | 0,25mm | | ♦ | ♦ | ♦ | ♦ | ♦ | ♦ | ♦ | ♦ |
| 16 | K21.04221 | 389 262 3255 | | 1 | PRİZDİREK AYAR RAYNELİ | THRUST WASHER | 0,31mm | | ♦ | ♦ | ♦ | ♦ | ♦ | ♦ | ♦ | ♦ |
| 16 | K21.04163 | 389 262 3555 | (389 262 0655) | 1 | PRİZDİREK AYAR RAYNELİ | THRUST WASHER | 0,40mm | | ♦ | ♦ | ♦ | ♦ | ♦ | ♦ | ♦ | ♦ |
| | | | (389 262 4452) | | | | | | | | | | | | | |
| 16 | K21.04164 | 389 262 3755 | (389 262 1954) | 1 | PRİZDİREK AYAR RAYNELİ | THRUST WASHER | 0,46mm | | ♦ | ♦ | ♦ | ♦ | ♦ | ♦ | ♦ | ♦ |
| 16 | K21.04246 | 389 262 3855 | | 1 | PRİZDİREK AYAR RAYNELİ | THRUST WASHER | 0,49mm | | ♦ | ♦ | ♦ | ♦ | ♦ | ♦ | ♦ | ♦ |
| 16 | K21.04250 | 389 262 4055 | (389 262 0155) | 1 | PRİZDİREK AYAR RAYNELİ | THRUST WASHER | 0,55mm | | ♦ | ♦ | ♦ | ♦ | ♦ | ♦ | ♦ | ♦ |
| | | | (389 262 2154) | | | | | | | | | | | | | |
| 16 | K21.04167 | 389 262 4255 | (389 262 2254) | 1 | PRİZDİREK AYAR RAYNELİ | THRUST WASHER | 0,61mm | | ♦ | ♦ | ♦ | ♦ | ♦ | ♦ | ♦ | ♦ |
| 16 | K21.04168 | 389 262 4355 | (389 262 2354) | 1 | PRİZDİREK AYAR RAYNELİ | THRUST WASHER | 0,64mm | | ♦ | ♦ | ♦ | ♦ | ♦ | ♦ | ♦ | ♦ |
| 16 | K21.04169 | 389 262 4555 | (389 262 2454) | 1 | PRİZDİREK AYAR RAYNELİ | THRUST WASHER | 0,70mm | | ♦ | ♦ | ♦ | ♦ | ♦ | ♦ | ♦ | ♦ |
| 16 | K21.04170 | 389 262 4755 | (389 262 2554) | 1 | PRİZDİREK AYAR RAYNELİ | THRUST WASHER | 0,76mm | | ♦ | ♦ | ♦ | ♦ | ♦ | ♦ | ♦ | ♦ |
| 16 | K21.04281 | 389 262 4855 | (389 262 0555) | 1 | PRİZDİREK AYAR RAYNELİ | THRUST WASHER | 0,79mm | | ♦ | ♦ | ♦ | ♦ | ♦ | ♦ | ♦ | ♦ |
| 16 | K21.04282 | 389 262 5555 | | 1 | PRİZDİREK AYAR RAYNELİ | THRUST WASHER | 1,00mm | | ♦ | ♦ | ♦ | ♦ | ♦ | ♦ | ♦ | ♦ |
| 16 | K21.04171 | 389 262 9654 | (389 262 2654) | 1 | PRİZDİREK AYAR RAYNELİ | THRUST WASHER | 2,00mm | | ♦ | ♦ | ♦ | ♦ | ♦ | ♦ | ♦ | ♦ |
| 17 | | 976 261 1833 | (976 261 1733) | 1 | GRUP MİLİ ÖN BİLYA KAPAĞI | COVER | | | | | | | | ♦ | ♦ | ♦ |
| | | | (976 261 1633) | | | | | | | | | | | | | |
| 18 | K21.06533 | 028 997 2348 | (004 997 2248) | 1 | GRUP MİLİ BİLYA KAPAK ORİNGİ | O-RING | 100X3mm | | | | | | | ♦ | ♦ | ♦ |
| 19 | | 006 994 4241 | (000472 065001) | 1 | TAKVİYE PİSTON SEKMANI | RETAINING RING | 65X2,5mm | | | | | | | ♦ | ♦ | ♦ |
| 20 | K21.04233 | 389 262 2555 | | 1 | TAKVİYE SİLİNDİR PULU | SPACER WASHER | 0,70mm | | | | | | | ♦ | ♦ | ♦ |
| 20 | K21.04234 | 389 262 2655 | | 1 | TAKVİYE SİLİNDİR PULU | SPACER WASHER | 0,90mm | | | | | | | ♦ | ♦ | ♦ |
| 20 | K21.04112 | 389 262 3254 | | 1 | TAKVİYE SİLİNDİR PULU | SPACER WASHER | 1,05mm | | | | | | | ♦ | ♦ | ♦ |
| 20 | K21.04111 | 389 262 3354 | | 1 | TAKVİYE SİLİNDİR PULU | SPACER WASHER | 1,10mm | | | | | | | ♦ | ♦ | ♦ |
| 20 | K21.04109 | 389 262 3554 | | 1 | TAKVİYE SİLİNDİR PULU | SPACER WASHER | 1,20mm | | | | | | | ♦ | ♦ | ♦ |
| 20 | K21.04105 | 389 262 2052 | | 1 | TAKVİYE SİLİNDİR PULU | SPACER WASHER | 1,40mm | | | | | | | ♦ | ♦ | ♦ |
| 20 | K21.04093 | 389 262 2355 | | 1 | TAKVİYE SİLİNDİR PULU | SPACER WASHER | 1,79mm | | | | | | | ♦ | ♦ | ♦ |
| 20 | K21.04025 | 389 262 3252 | | 1 | TAKVİYE SİLİNDİR PULU | SPACER WASHER | 2,00mm | | | | | | | ♦ | ♦ | ♦ |
| 20 | K21.04024 | 389 262 3352 | | 1 | TAKVİYE SİLİNDİR PULU | SPACER WASHER | 2,50mm | | | | | | | ♦ | ♦ | ♦ |
| 21 | K21.06994 | 945 267 0218 | (387 267 0918) | 1 | TAKVİYE MİL PİSTONU | PISTON | | | ♦ | ♦ | ♦ | ♦ | ♦ | ♦ | ♦ | ♦ |

NOTES :
Parts encoded alphabetic and numaric are used together.

GEARBOX TYPE:
715240 - G210 - 16 / 14,2 - 0,83 EPS
715241 - 715242 -715252 - 715253 - G210 - 16 / 14,02 - 0,83
715500 - 715501- 715504 - G210 - 16 / 14,02 - 0,83

NOTLAR :
Alfabetik ve rakam ile kodlanan parçalar birlikte kullanılır.

ŞANZIMAN TİPLERİ:
715240 - G210 - 16 / 14,2 - 0,83 EPS
715241 - 715242 -715252 - 715253 - G210 - 16 / 14,02 - 0,83
715500 - 715501- 715504 - G210 - 16 / 14,02 - 0,83





Original parts names, oem numbers, symbols and descriptions used in this catalogue are for reference purposes only.

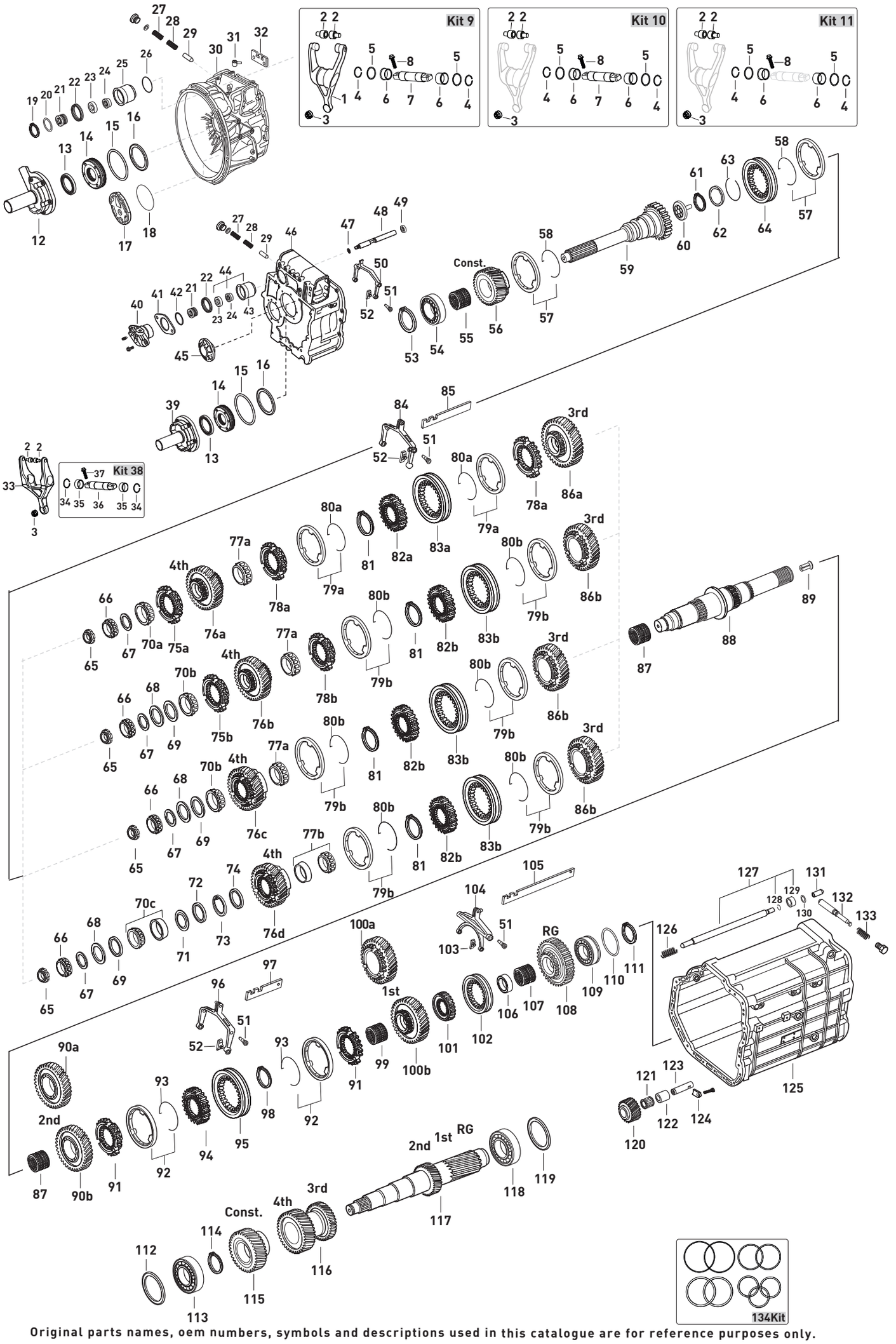


Original parts names, oem numbers, symbols and descriptions used in this catalogue are for reference purposes only.

| Fig. | Kacmaz No | Oem No | Oem Old No | Pcs. | Ürün Tanımı | Description | Sizes | Not | 715240 | 715241 | 715242 | 715252 | 715253 | 715500 | 715501 | 715504 |
|---|---|---|---|---|---|---|---|---|---|---|---|---|---|---|---|---|
| 22 | K21.03524 | 006 997 6447 | (020 997 6647) | 1 | TAKVİYE HAVA KEÇESİ | OIL SEAL | 41X48X11,5mm | | ♦ | ♦ | ♦ | ♦ | ♦ | ♦ | ♦ | ♦ |
| | | | (012 997 3347) | | | | | | | | | | | | | |
| 23 | K21.04178 | 387 267 0650 | (387 267 0250) | 1 | TAKVİYE SİLİNDİR BURCU | BUSHING | 34X22X8mm | | ♦ | ♦ | ♦ | ♦ | ♦ | ♦ | ♦ | ♦ |
| 24 | K21.03523 | 000 267 0197 | (000 267 0397) | 1 | TAKVİYE HİLAL MİL KEÇESİ | OIL SEAL | 22X32X8mm | | ♦ | ♦ | ♦ | ♦ | ♦ | ♦ | ♦ | ♦ |
| 25 | K21.06036 | 945 267 0819 | (945 267 0119) | 1 | TAKVİYE SİLİNDİR GÖVDESİ | CYLINDER | | | | | | | | ♦ | ♦ | ♦ |
| | | | (945 267 0719) | | | | | | | | | | | | | |
| | | | (945 267 0019) | | | | | | | | | | | | | |
| 25 | K21.06056 | 945 267 0619 | (945 267 0219) | 1 | TAKVİYE SİLİNDİR GÖVDESİ | CYLINDER | | | | | | | | ♦ | ♦ | |
| 26 | K21.06534 | 022 997 4248 | | 1 | TAKVİYE SİLİNDİR ORİNGİ | O-RING | 55,6X3mm | | | | | | | ♦ | ♦ | ♦ |
| 26 | | 016 997 6648 | | 1 | TAKVİYE SİLİNDİR ORİNGİ | O-RING | | | | | | | | ♦ | ♦ | |
| 27 | K21.06015 | 387 993 4501 | | 1 | ŞANZ.TAKVİYE KİLİT FİŞEK YAYI | SPRING | 6,2X63mm | | ♦ | ♦ | ♦ | ♦ | ♦ | ♦ | ♦ | ♦ |
| 28 | K21.03500 | 387 993 4401 | (387 993 2501) | 1 | KİLİT YAYI | SPRING | 9,8X63,3mm | | ♦ | ♦ | ♦ | ♦ | ♦ | ♦ | ♦ | ♦ |
| 29 | K21.03492 | 389 267 1174 | (387 267 0074) | 1 | KİLİT FİŞEĞİ | PIN | | | ♦ | ♦ | ♦ | ♦ | ♦ | ♦ | ♦ | ♦ |
| 30 | K21.06526 | 945 260 8412 | (945 261 7501) | 1 | ŞANZIMAN ÖN GÖVDE | HOUSING | | EPS | | | | | | ♦ | ♦ | ♦ |
| 30 | K21.06582 | 945 260 0111 | (945 260 2712) | 1 | ŞANZIMAN ÖN GÖVDE | HOUSING | | MPS | | | | | | ♦ | ♦ | ♦ |
| 30 | | 945 260 5411 | | 1 | ŞANZIMAN ÖN GÖVDE | HOUSING | | | | | | | | ♦ | ♦ | |
| 31 | K21.06529 | 437 261 0082 | (945 261 0082) | 1 | ŞANZIMAN HAVALANDIRMA | CAP | | | | | | | | ♦ | ♦ | ♦ |
| 32 | K21.06585 | 945 267 0359 | | 1 | VİTES HİLAL ÇITA KİLİTLEMESİ | BRACKET | | | | | | | | ♦ | ♦ | ♦ |
| 32 | K21.06509 | 945 267 0459 | | 1 | VİTES HİLAL ÇITA KİLİTLEMESİ | BRACKET | | | | | | | | ♦ | ♦ | ♦ |
| 33 | | 650 250 3813 | | 1 | DEBRİYAJ ÇATALI | RELEASE FORK | | | ♦ | ♦ | ♦ | ♦ | ♦ | | | |
| 34 | | 912009 037200 | | 4 | DEBRİYAJ ÇATAL MİL SEKMANI | RETAINING RING | | | ♦ | ♦ | ♦ | ♦ | ♦ | | | |
| 35 | | 001 992 8401 | | 2 | DEBRİYAJ ÇATAL MİL BURCU | BUSHING | | | ♦ | ♦ | ♦ | ♦ | ♦ | | | |
| 36 | | 650 254 0006 | | 1 | DEBRİYAJ ÇATAL MİLİ | SHAFT | | | ♦ | ♦ | ♦ | ♦ | ♦ | | | |
| 37 | | 914112 010025 | | 2 | DEBRİYAJ ÇATAL MİL VİDASI | SCREW | M10X45 | | ♦ | ♦ | ♦ | ♦ | ♦ | | | |
| 38 | K21.04309 | | | Kit | DEBRİYAJ ÇATALI TAMİR TAKIMI | RELEASE FORK REPAIR KIT | | | ♦ | ♦ | ♦ | ♦ | ♦ | | | |
| 39 | K21.03430 | 389 261 4518 | | 1 | PRİZDİREK KEÇE KAPAĞI | COVER | | | ♦ | ♦ | ♦ | ♦ | ♦ | | | |
| 40 | K21.06236 | 389 267 2819 | (389 267 2719) | 1 | TAKVİYE SİLİNDİR GÖVDE KAPAĞI | COVER | | | ♦ | ♦ | ♦ | ♦ | ♦ | | | |
| | | | (389 267 2419) | | | | | | | | | | | | | |
| | | | (389 267 2319) | | | | | | | | | | | | | |
| | | | (389 267 1519) | | | | | | | | | | | | | |
| 41 | K21.04158 | 387 263 3352 | | 1 | TAKVİYE SİLİNDİR PULU | SPACER WASHER | 0,20mm | | ♦ | ♦ | ♦ | ♦ | ♦ | | | |
| 41 | K21.04159 | 387 263 3452 | | 1 | TAKVİYE SİLİNDİR PULU | SPACER WASHER | 0,40mm | | ♦ | ♦ | ♦ | ♦ | ♦ | | | |
| 41 | K21.04179 | 387 263 3552 | | 1 | TAKVİYE SİLİNDİR PULU | SPACER WASHER | 0,60mm | | ♦ | ♦ | ♦ | ♦ | ♦ | | | |
| 41 | K21.04181 | 387 263 3652 | | 1 | TAKVİYE SİLİNDİR PULU | SPACER WASHER | 0,80mm | | ♦ | ♦ | ♦ | ♦ | ♦ | | | |
| 41 | K21.04180 | 387 263 3752 | | 1 | TAKVİYE SİLİNDİR PULU | SPACER WASHER | 1,00mm | | ♦ | ♦ | ♦ | ♦ | ♦ | | | |
| 41 | K21.04251 | 387 263 3852 | | 1 | TAKVİYE SİLİNDİR PULU | SPACER WASHER | 2,00mm | | ♦ | ♦ | ♦ | ♦ | ♦ | | | |
| 42 | K21.06398 | 007 997 4248 | | 1 | TAKVİYE SİLİNDİR ORİNGİ | O-RING | 63X3mm | | ♦ | ♦ | ♦ | ♦ | ♦ | | | |
| 43 | K21.06013 | 389 267 3319 | (389 267 0419) | 1 | TAKVİYE SİLİNDİR GÖVDESİ (BOŞ) | CYLINDER (EMPTY) | | | ♦ | ♦ | ♦ | ♦ | ♦ | | | |
| | | | (389 267 2119) | | | | | | | | | | | | | |
| | | | (389 267 2219) | | | | | | | | | | | | | |
| 44 | K21.06500 | | | Kit | TAKVİYE SİLİNDİR GÖVDESİ (DOLU) | CYLINDER (FULL) | | | ♦ | ♦ | ♦ | ♦ | ♦ | | | |
| 45 | | 389 261 1933 | (389 261 0633) | 1 | GRUP MİLİ ÖN BİLYA KAPAĞI | COVER | | | ♦ | ♦ | ♦ | ♦ | ♦ | | | |
| | | | (389 261 0133) | | | | | | | | | | | | | |
| 46 | | 389 261 0408 | (389 261 9702) | 1 | ŞANZIMAN ÖN GÖVDE | HOUSING | | | ♦ | ♦ | ♦ | ♦ | ♦ | | | |
| 47 | K21.04160 | 387 263 2652 | | 1 | TAKVİYE HİLAL MİL PULU | SPACER WASHER | 0,20mm | | ♦ | ♦ | ♦ | ♦ | ♦ | ♦ | ♦ | ♦ |
| 47 | K21.04161 | 387 263 2752 | | 1 | TAKVİYE HİLAL MİL PULU | SPACER WASHER | 0,40mm | | ♦ | ♦ | ♦ | ♦ | ♦ | ♦ | ♦ | ♦ |
| 47 | | 387 263 2852 | | 1 | TAKVİYE HİLAL MİL PULU | SPACER WASHER | 0,60mm | | ♦ | ♦ | ♦ | ♦ | ♦ | ♦ | ♦ | ♦ |
| 47 | | 387 263 3052 | | 1 | TAKVİYE HİLAL MİL PULU | SPACER WASHER | 1,00mm | | ♦ | ♦ | ♦ | ♦ | ♦ | ♦ | ♦ | ♦ |
| 48 | | 389 267 3017 | | 1 | TAKVİYE HİLAL MİLİ | GEAR SHIFT RAIL | | | | ♦ | ♦ | | ♦ | | | |
| 48 | | 389 267 2217 | | 1 | TAKVİYE HİLAL MİLİ | GEAR SHIFT RAIL | | | ♦ | | | ♦ | | | | |
| 48 | | 945 267 0117 | | 1 | TAKVİYE HİLAL MİLİ | GEAR SHIFT RAIL | | | | | | | | ♦ | ♦ | ♦ |
| 48 | K21.07003 | 945 267 0017 | | 1 | TAKVİYE HİLAL MİLİ | GEAR SHIFT RAIL | | | | | | | | ♦ | ♦ | ♦ |
| 48 | | 945 267 0617 | | 1 | TAKVİYE HİLAL MİLİ | GEAR SHIFT RAIL | | | | | | | | ♦ | ♦ | |

NOTES :
Parts encoded alphabetic and numaric are used together.

GEARBOX TYPE:
715240 - G210 - 16 / 14,2 - 0,83 EPS
715241 - 715242 -715252 - 715253 - G210 - 16 / 14,02 - 0,83
715500 - 715501- 715504 - G210 - 16 / 14,02 - 0,83

NOTLAR :
Alfabetik ve rakam ile kodlanan parçalar birlikte kullanılır.

ŞANZIMAN TİPLERİ:
715240 - G210 - 16 / 14,2 - 0,83 EPS
715241 - 715242 -715252 - 715253 - G210 - 16 / 14,02 - 0,83
715500 - 715501- 715504 - G210 - 16 / 14,02 - 0,83





Original parts names, oem numbers, symbols and descriptions used in this catalogue are for reference purposes only.

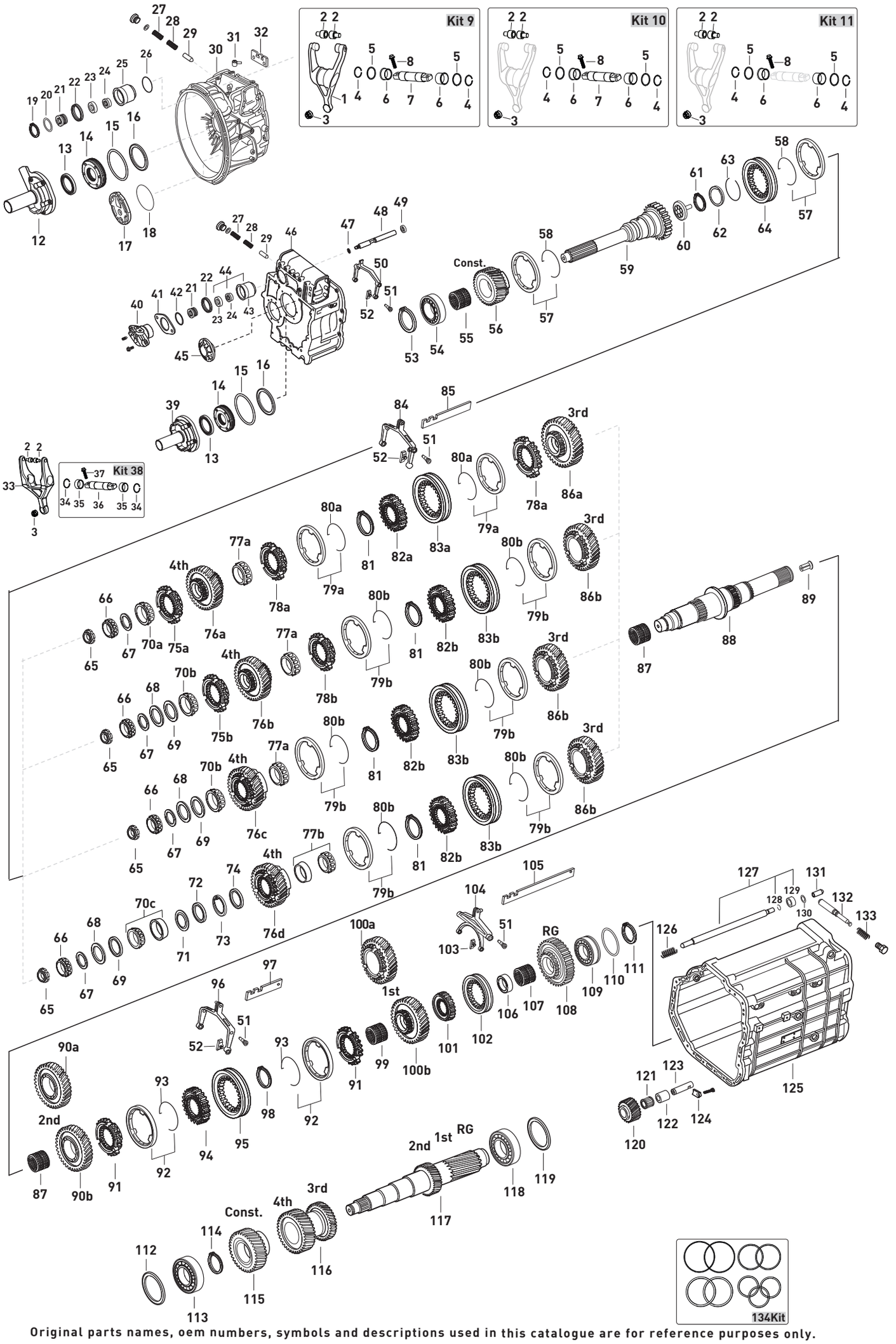




Original parts names, oem numbers, symbols and descriptions used in this catalogue are for reference purposes only.

| Fig. | Kacmaz No | Oem No | Oem Old No | Pcs. | Ürün Tanımı | Description | Sizes | Not | 715240 | 715241 | 715242 | 715252 | 715253 | 715500 | 715501 | 715504 |
|---|---|---|---|---|---|---|---|---|---|---|---|---|---|---|---|---|
| 49 | K21.04252 | 000 992 7603 | (389 267 0050) | 1 | TAKVİYE HİLAL MİL BURCU | BUSHING | 21X27X16mm | | | | | | | ♦ | ♦ | ♦ |
| 50 | | 389 265 1201 | | 1 | TAKVİYE HİLALİ | GEAR SHIFT FORK | | | ♦ | ♦ | ♦ | ♦ | ♦ | | | |
| 50 | K21.06410 | 945 265 0001 | | 1 | TAKVİYE HİLALİ | GEAR SHIFT FORK | | | | | | | | ♦ | ♦ | ♦ |
| 51 | K21.04307 | 960 265 0774 | (945 265 1274) | 8 | HİLAL CİVATASI | PIN | | | ♦ | ♦ | ♦ | ♦ | ♦ | ♦ | ♦ | ♦ |
| | | | (945 265 2974) | | | | | | | | | | | | | |
| | | | (945 265 2774) | | | | | | | | | | | | | |
| 52 | K21.03431 | 960 265 0049 | (947 265 0349) | 6 | TAK./1./2./3./4.VİTES HİLAL PABUCU | SLIDING PAD | | | ♦ | ♦ | ♦ | ♦ | ♦ | ♦ | ♦ | ♦ |
| | | | (389 265 2749) | | | | | | | | | | | | | |
| 53 | K21.04347 | 387 262 8673 | | 1 | PRİZDİREK ÖN BİLYA SEKMANI | RETAINING RING | 3,15mm | | ♦ | ♦ | ♦ | ♦ | ♦ | ♦ | ♦ | ♦ |
| 53 | K21.04346 | 387 262 8773 | | 1 | PRİZDİREK ÖN BİLYA SEKMANI | RETAINING RING | 3,20mm | | ♦ | ♦ | ♦ | ♦ | ♦ | ♦ | ♦ | ♦ |
| 53 | K21.07015 | 387 262 8873 | | 1 | PRİZDİREK ÖN BİLYA SEKMANI | RETAINING RING | 3,25mm | | ♦ | ♦ | ♦ | ♦ | ♦ | ♦ | ♦ | ♦ |
| 53 | K21.04348 | 387 262 8973 | | 1 | PRİZDİREK ÖN BİLYA SEKMANI | RETAINING RING | 3,30mm | | ♦ | ♦ | ♦ | ♦ | ♦ | ♦ | ♦ | ♦ |
| 53 | K21.07016 | 387 262 9073 | | 1 | PRİZDİREK ÖN BİLYA SEKMANI | RETAINING RING | 3,35mm | | ♦ | ♦ | ♦ | ♦ | ♦ | ♦ | ♦ | ♦ |
| 53 | K21.04349 | 387 262 9173 | | 1 | PRİZDİREK ÖN BİLYA SEKMANI | RETAINING RING | 3,40mm | | ♦ | ♦ | ♦ | ♦ | ♦ | ♦ | ♦ | ♦ |
| 53 | K21.07017 | 387 262 9273 | | 1 | PRİZDİREK ÖN BİLYA SEKMANI | RETAINING RING | 3,45mm | | ♦ | ♦ | ♦ | ♦ | ♦ | ♦ | ♦ | ♦ |
| 53 | K21.04350 | 387 262 9373 | | 1 | PRİZDİREK ÖN BİLYA SEKMANI | RETAINING RING | 3,50mm | | ♦ | ♦ | ♦ | ♦ | ♦ | ♦ | ♦ | ♦ |
| 54 | K21.03618 | 011 981 1305 | (014 981 9005) | 1 | PRİZDİREK ÖN BİLYA | ROLLER BEARING | 75X140X34,25mm | | ♦ | ♦ | ♦ | ♦ | ♦ | ♦ | ♦ | ♦ |
| | | | (008 981 8605) | | | | | | | | | | | | | |
| | | | (008 981 2605) | | | | | | | | | | | | | |
| 55 | K21.03815 | 016 981 0010 | (018 981 8710) | 1 | TAKVİYE DİŞLİ MASURA BİLYA | NEEDLE CAGE | 89X97X40mm | | ♦ | ♦ | ♦ | ♦ | ♦ | ♦ | ♦ | ♦ |
| 56 | K21.03030 | 945 262 4110 | (945 262 1610) | 1 | TAKVİYE DİŞLİSİ 32 DİŞ | CONSTANT GEAR 32 T. | | (1) | ♦ | ♦ | ♦ | ♦ | ♦ | ♦ | ♦ | ♦ |
| | | | (945 262 0010) | | | | | | | | | | | | | |
| | | | (389 262 6310) | | | | | | | | | | | | | |
| | | | (945 262 1110) | | | | | | | | | | | | | |
| 56 | K21.03130 | 945 262 9817 | (945 262 5417) | 1 | TAKVİYE DİŞLİSİ 32 DİŞ | CONSTANT GEAR 32 T. | | (2) | | | | | | ♦ | ♦ | ♦ |
| | | | (945 262 7517) | | | | | | | | | | | | | |
| | | | (945 262 7617) | | | | | | | | | | | | | |
| 57 | K21.03015 | 389 262 0637 | (387 262 0837) | 2 | TAKVİYE FRENLEME (Mo) | SYNCHRONIZING CONE / Mo | | (1) | ♦ | ♦ | ♦ | ♦ | ♦ | ♦ | ♦ | ♦ |
| | | | (389 262 1037) | | | | | | | | | | | | | |
| 57 | K21.03401 | 945 260 0450 | | 2 | TAKVİYE FRENLEME (C) | SYNCHRONIZING CONE / C | | (1) | ♦ | ♦ | ♦ | ♦ | ♦ | ♦ | ♦ | ♦ |
| 57 | K21.03136 | 945 260 2245 | (946 262 6337) | 2 | TAKVİYE FRENLEME (Mo) | SYNCHRONIZING CONE / Mo | | (2) | | | | | | ♦ | ♦ | ♦ |
| 57 | K21.06274 | 947 260 2845 | (947 260 0545) | 2 | TAKVİYE FRENLEME (C) | SYNCHRONIZING CONE / C | | (2) | | | | | | ♦ | ♦ | ♦ |
| 58 | K21.03044 | 387 262 1093 | (387 262 0693) | 2 | FRENLEME TELİ | SPRING | | | ♦ | ♦ | ♦ | ♦ | ♦ | ♦ | ♦ | ♦ |
| | | | (960 262 1393) | | | | | | | | | | | | | |
| 59 | K21.03045 | 389 262 6501 | | 1 | PRİZDİREK 60 DİŞ | INPUT SHAFT 60 T. | | | ♦ | ♦ | ♦ | ♦ | ♦ | | | |
| 59 | K21.03143 | 389 262 5101 | | 1 | PRİZDİREK 60 DİŞ | INPUT SHAFT 60 T. | | | ♦ | ♦ | ♦ | ♦ | ♦ | | | |
| 59 | K21.03142 | 389 262 8201 | (945 262 0103) | 1 | PRİZDİREK 60 DİŞ | INPUT SHAFT 60 T. | | | | | | | | ♦ | ♦ | ♦ |
| | | | (389 262 6201) | | | | | | | | | | | | | |
| 59 | K21.03138 | 945 262 0803 | (945 262 6303) | 1 | PRİZDİREK 60 DİŞ | INPUT SHAFT 60 T. | | (PTO) | | | | | | ♦ | ♦ | |
| 59 | | 945 262 4703 | (945 262 2401) | 1 | PRİZDİREK 60 DİŞ | INPUT SHAFT 60 T. | | (PTO) | | | | | | ♦ | ♦ | |
| 59 | | 945 262 2482 | | 1 | PRİZDİREK | INPUT SHAFT | | | | | | | | | ♦ | |
| 60 | K21.04001 | 976 269 0034 | (960 269 0434) | 1 | PRİZDİREK YAĞ PİPETİ | OIL COLLECTOR | | (3) | ♦ | ♦ | ♦ | ♦ | ♦ | ♦ | ♦ | ♦ |
| 60 | K21.04085 | 389 269 8534 | | 1 | PRİZDİREK YAĞ PİPETİ | OIL COLLECTOR | | (4) | ♦ | ♦ | ♦ | ♦ | ♦ | ♦ | ♦ | ♦ |
| 61 | K21.04002 | 000 994 9841 | | 1 | PRİZDİREK YAĞ PİPETİ SEKMANI | RETAINING RING | | (3) | ♦ | ♦ | ♦ | ♦ | ♦ | ♦ | ♦ | ♦ |
| 61 | K21.04086 | 007993 050200 | | 1 | PRİZDİREK YAĞ PİPETİ SEKMANI | RETAINING RING | | (4) | ♦ | ♦ | ♦ | ♦ | ♦ | ♦ | ♦ | ♦ |
| 62 | K21.03510 | 001 262 0362 | (000 262 8762) | 1 | PRİZDİREK ARKA KEÇE | OIL SEAL | 78,5X105X7mm | | ♦ | ♦ | ♦ | ♦ | ♦ | ♦ | ♦ | ♦ |
| | | | (000 262 9162) | | | | | | | | | | | | | |
| 62 | K21.03522 | 018 997 7147 | (018 997 7547) | 1 | PRİZDİREK ARKA KEÇE | OIL SEAL | 80X104X10mm | | ♦ | ♦ | ♦ | ♦ | ♦ | | | |
| 63 | K21.04146 | 389 262 0973 | (945 262 0073) | 1 | PRİZDİREK KEÇE SEKMANI | LOCK RING | | | ♦ | ♦ | ♦ | ♦ | ♦ | ♦ | ♦ | ♦ |
| 64 | K21.03002 | 945 262 2823 | (945 262 0323) | 1 | TAKVİYE HALKA | ENGAGING SLEEVE | | (1) | ♦ | ♦ | ♦ | ♦ | ♦ | ♦ | ♦ | ♦ |
| | | | (945 262 0623) | | | | | | | | | | | | | |
| | | | (389 262 4123) | | | | | | | | | | | | | |
| | | | (389 262 2723) | | | | | | | | | | | | | |

NOTES :
Parts encoded alphabetic and numaric are used together.

GEARBOX TYPE:
715240 - G210 - 16 / 14,2 - 0,83 EPS
715241 - 715242 -715252 - 715253 - G210 - 16 / 14,02 - 0,83
715500 - 715501- 715504 - G210 - 16 / 14,02 - 0,83

NOTLAR :
Alfabetik ve rakam ile kodlanan parçalar birlikte kullanılır.

ŞANZIMAN TİPLERİ:
715240 - G210 - 16 / 14,2 - 0,83 EPS
715241 - 715242 -715252 - 715253 - G210 - 16 / 14,02 - 0,83
715500 - 715501- 715504 - G210 - 16 / 14,02 - 0,83





Original parts names, oem numbers, symbols and descriptions used in this catalogue are for reference purposes only.

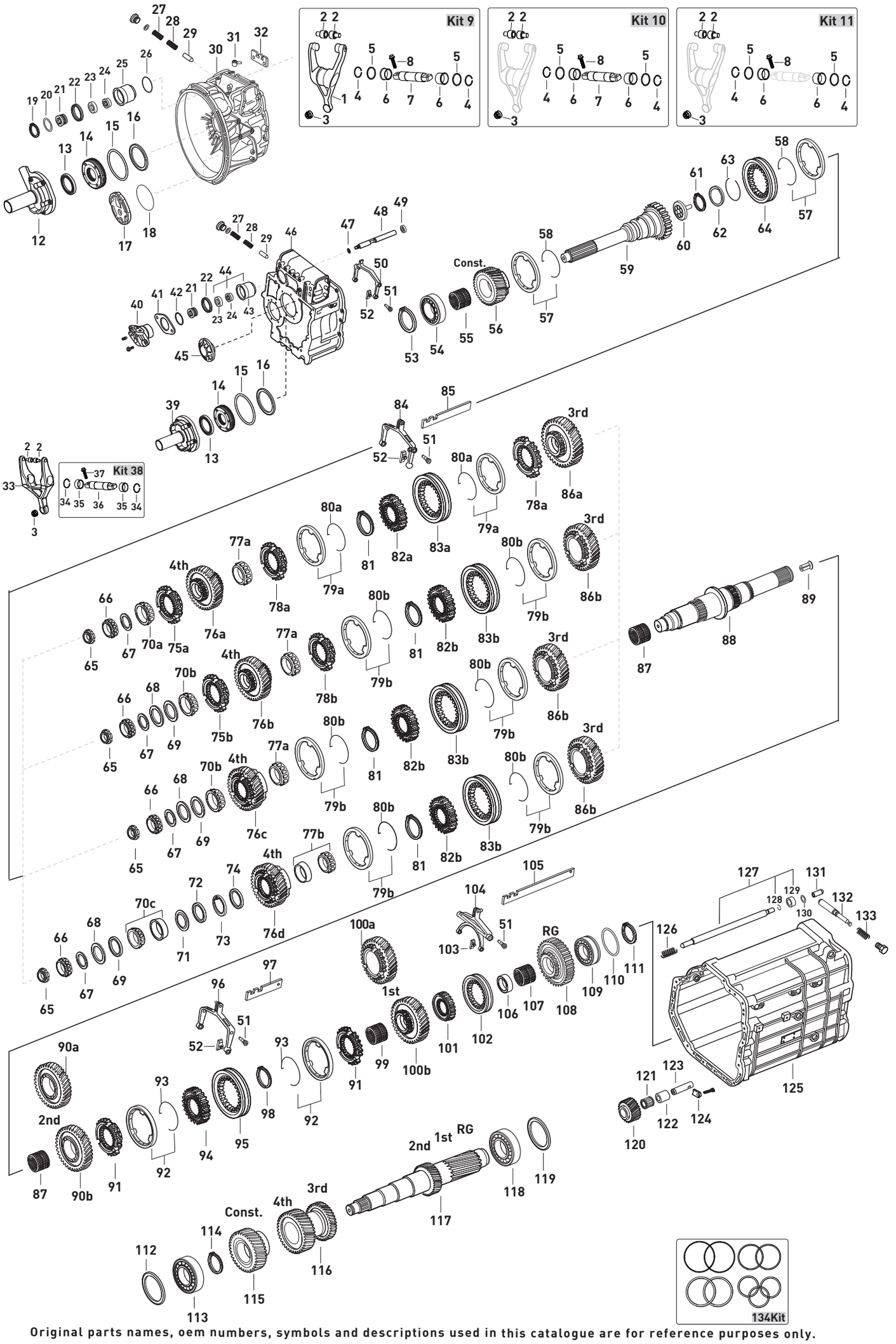




Original parts names, oem numbers, symbols and descriptions used in this catalogue are for reference purposes only.

| Fig. | Kacmaz No | Oem No | Oem Old No | Pcs. | Ürün Tanımı | Description | Sizes | Not | 715240 | 715241 | 715242 | 715252 | 715253 | 715500 | 715501 | 715504 |
|---|---|---|---|---|---|---|---|---|---|---|---|---|---|---|---|---|
| 64 | K21.03137 | 945 262 6823 | (945 262 6423) | 1 | TAKVİYE HALKA | ENGAGING SLEEVE | | (2) | | | | | | ♦ | ♦ | ♦ |
| 65 | K21.03432 | 945 990 0250 | (945 990 0150) | 1 | KAMALI MİL SOMUNU | NUT | M30X1,5 | | ♦ | ♦ | ♦ | ♦ | ♦ | ♦ | ♦ | ♦ |
| 66 | K21.03619 | 015 981 1605 | (013 981 1105) | 1 | KAMALI MİL UÇ BİLYA | ROLLER BEARING | 39,69X40,39mm | | ♦ | ♦ | ♦ | ♦ | ♦ | ♦ | ♦ | ♦ |
| 67 | K21.04024 | 389 262 3352 | | 1 | 4.VİTES ÖN BİLYA AYAR PULU | THRUST WASHER | 2,50mm | (A)(B)(C)(D) | ♦ | ♦ | ♦ | ♦ | ♦ | ♦ | ♦ | ♦ |
| 67 | K21.04025 | 389 262 3252 | | 1 | 4.VİTES ÖN BİLYA AYAR PULU | THRUST WASHER | 2,00mm | (A)(B)(C)(D) | ♦ | ♦ | ♦ | ♦ | ♦ | ♦ | ♦ | ♦ |
| 67 | K21.04026 | 389 262 3152 | | 1 | 4.VİTES ÖN BİLYA AYAR PULU | THRUST WASHER | 1,95mm | (A)(B)(C)(D) | ♦ | ♦ | ♦ | ♦ | ♦ | ♦ | ♦ | ♦ |
| 67 | K21.04027 | 389 262 3052 | | 1 | 4.VİTES ÖN BİLYA AYAR PULU | THRUST WASHER | 1,90mm | (A)(B)(C)(D) | ♦ | ♦ | ♦ | ♦ | ♦ | ♦ | ♦ | ♦ |
| 67 | K21.04028 | 389 262 2952 | | 1 | 4.VİTES ÖN BİLYA AYAR PULU | THRUST WASHER | 1,85mm | (A)(B)(C)(D) | ♦ | ♦ | ♦ | ♦ | ♦ | ♦ | ♦ | ♦ |
| 67 | K21.04092 | 389 262 2455 | | 1 | 4.VİTES ÖN BİLYA AYAR PULU | THRUST WASHER | 1,82mm | (A)(B)(C)(D) | ♦ | ♦ | ♦ | ♦ | ♦ | ♦ | ♦ | ♦ |
| 67 | K21.04093 | 389 262 2355 | | 1 | 4.VİTES ÖN BİLYA AYAR PULU | THRUST WASHER | 1,79mm | (A)(B)(C)(D) | ♦ | ♦ | ♦ | ♦ | ♦ | ♦ | ♦ | ♦ |
| 67 | K21.04094 | 389 262 2255 | | 1 | 4.VİTES ÖN BİLYA AYAR PULU | THRUST WASHER | 1,76mm | (A)(B)(C)(D) | ♦ | ♦ | ♦ | ♦ | ♦ | ♦ | ♦ | ♦ |
| 67 | K21.04095 | 389 262 2155 | | 1 | 4.VİTES ÖN BİLYA AYAR PULU | THRUST WASHER | 1,73mm | (A)(B)(C)(D) | ♦ | ♦ | ♦ | ♦ | ♦ | ♦ | ♦ | ♦ |
| 67 | K21.04096 | 389 262 2055 | | 1 | 4.VİTES ÖN BİLYA AYAR PULU | THRUST WASHER | 1,67mm | (A)(B)(C)(D) | ♦ | ♦ | ♦ | ♦ | ♦ | ♦ | ♦ | ♦ |
| 67 | K21.04097 | 389 262 1955 | | 1 | 4.VİTES ÖN BİLYA AYAR PULU | THRUST WASHER | 1,64mm | (A)(B)(C)(D) | ♦ | ♦ | ♦ | ♦ | ♦ | ♦ | ♦ | ♦ |
| 67 | K21.04098 | 389 262 1855 | | 1 | 4.VİTES ÖN BİLYA AYAR PULU | THRUST WASHER | 1,61mm | (A)(B)(C)(D) | ♦ | ♦ | ♦ | ♦ | ♦ | ♦ | ♦ | ♦ |
| 67 | K21.04099 | 389 262 1755 | | 1 | 4.VİTES ÖN BİLYA AYAR PULU | THRUST WASHER | 1,58mm | (A)(B)(C)(D) | ♦ | ♦ | ♦ | ♦ | ♦ | ♦ | ♦ | ♦ |
| 67 | K21.04100 | 389 262 2352 | | 1 | 4.VİTES ÖN BİLYA AYAR PULU | THRUST WASHER | 1,55mm | (A)(B)(C)(D) | ♦ | ♦ | ♦ | ♦ | ♦ | ♦ | ♦ | ♦ |
| 67 | K21.04101 | 389 262 1655 | | 1 | 4.VİTES ÖN BİLYA AYAR PULU | THRUST WASHER | 1,52mm | (A)(B)(C)(D) | ♦ | ♦ | ♦ | ♦ | ♦ | ♦ | ♦ | ♦ |
| 67 | K21.04102 | 389 262 1555 | | 1 | 4.VİTES ÖN BİLYA AYAR PULU | THRUST WASHER | 1,49mm | (A)(B)(C)(D) | ♦ | ♦ | ♦ | ♦ | ♦ | ♦ | ♦ | ♦ |
| 67 | K21.04103 | 389 262 1455 | | 1 | 4.VİTES ÖN BİLYA AYAR PULU | THRUST WASHER | 1,46mm | (A)(B)(C)(D) | ♦ | ♦ | ♦ | ♦ | ♦ | ♦ | ♦ | ♦ |
| 67 | K21.04104 | 389 262 1355 | | 1 | 4.VİTES ÖN BİLYA AYAR PULU | THRUST WASHER | 1,43mm | (A)(B)(C)(D) | ♦ | ♦ | ♦ | ♦ | ♦ | ♦ | ♦ | ♦ |
| 67 | K21.04105 | 389 262 2052 | | 1 | 4.VİTES ÖN BİLYA AYAR PULU | THRUST WASHER | 1,40mm | (A)(B)(C)(D) | ♦ | ♦ | ♦ | ♦ | ♦ | ♦ | ♦ | ♦ |
| 67 | K21.04106 | 389 262 1952 | | 1 | 4.VİTES ÖN BİLYA AYAR PULU | THRUST WASHER | 1,35mm | (A)(B)(C)(D) | ♦ | ♦ | ♦ | ♦ | ♦ | ♦ | ♦ | ♦ |
| 67 | K21.04107 | 389 262 2754 | | 1 | 4.VİTES ÖN BİLYA AYAR PULU | THRUST WASHER | 1,30mm | (A)(B)(C)(D) | ♦ | ♦ | ♦ | ♦ | ♦ | ♦ | ♦ | ♦ |
| 67 | K21.04108 | 389 262 3654 | | 1 | 4.VİTES ÖN BİLYA AYAR PULU | THRUST WASHER | 1,25mm | (A)(B)(C)(D) | ♦ | ♦ | ♦ | ♦ | ♦ | ♦ | ♦ | ♦ |
| 67 | K21.04109 | 389 262 3554 | | 1 | 4.VİTES ÖN BİLYA AYAR PULU | THRUST WASHER | 1,20mm | (A)(B)(C)(D) | ♦ | ♦ | ♦ | ♦ | ♦ | ♦ | ♦ | ♦ |
| 67 | K21.04110 | 389 262 3454 | | 1 | 4.VİTES ÖN BİLYA AYAR PULU | THRUST WASHER | 1,15mm | (A)(B)(C)(D) | ♦ | ♦ | ♦ | ♦ | ♦ | ♦ | ♦ | ♦ |
| 67 | K21.04111 | 389 262 3354 | | 1 | 4.VİTES ÖN BİLYA AYAR PULU | THRUST WASHER | 1,10mm | (A)(B)(C)(D) | ♦ | ♦ | ♦ | ♦ | ♦ | ♦ | ♦ | ♦ |
| 67 | K21.04112 | 389 262 3254 | | 1 | 4.VİTES ÖN BİLYA AYAR PULU | THRUST WASHER | 1,05mm | (A)(B)(C)(D) | ♦ | ♦ | ♦ | ♦ | ♦ | ♦ | ♦ | ♦ |
| 67 | K21.04113 | 389 262 2854 | | 1 | 4.VİTES ÖN BİLYA AYAR PULU | THRUST WASHER | 0,50mm | (A)(B)(C)(D) | ♦ | ♦ | ♦ | ♦ | ♦ | ♦ | ♦ | ♦ |
| 67 | K21.94113 | | | 1 | 4.VİTES ÖN BİLYA AYAR PULU | THRUST WASHER | 0,40mm | (A)(B)(C)(D) | ♦ | ♦ | ♦ | ♦ | ♦ | ♦ | ♦ | ♦ |
| 67 | K21.84113 | | | 1 | 4.VİTES ÖN BİLYA AYAR PULU | THRUST WASHER | 0,30mm | (A)(B)(C)(D) | ♦ | ♦ | ♦ | ♦ | ♦ | ♦ | ♦ | ♦ |
| 67 | K21.74113 | | | 1 | 4.VİTES ÖN BİLYA AYAR PULU | THRUST WASHER | 0,20mm | (A)(B)(C)(D) | ♦ | ♦ | ♦ | ♦ | ♦ | ♦ | ♦ | ♦ |
| 67 | K21.64113 | | | 1 | 4.VİTES ÖN BİLYA AYAR PULU | THRUST WASHER | 0,10mm | (A)(B)(C)(D) | ♦ | ♦ | ♦ | ♦ | ♦ | ♦ | ♦ | ♦ |
| 68 | K21.04120 | 389 262 5552 | | 1 | KAMALI MİL UÇ BİLYA ALT PULU | THRUST WASHER | 1,20mm | (B)(C)(D) | ♦ | ♦ | ♦ | ♦ | ♦ | | | |
| 68 | K21.04149 | | | 1 | KAMALI MİL UÇ BİLYA ALT PULU | THRUST WASHER | 1,10mm | (B)(C)(D) | ♦ | ♦ | ♦ | ♦ | ♦ | | | |
| 68 | K21.04148 | | | 1 | KAMALI MİL UÇ BİLYA ALT PULU | THRUST WASHER | 1,00mm | (B)(C)(D) | ♦ | ♦ | ♦ | ♦ | ♦ | | | |
| 68 | K21.04147 | | | 1 | KAMALI MİL UÇ BİLYA ALT PULU | THRUST WASHER | 0,90mm | (B)(C)(D) | ♦ | ♦ | ♦ | ♦ | ♦ | | | |
| 68 | K21.04121 | 389 262 5652 | | 1 | KAMALI MİL UÇ BİLYA ALT PULU | THRUST WASHER | 0,80mm | (B)(C)(D) | ♦ | ♦ | ♦ | ♦ | ♦ | | | |
| 68 | K21.04128 | 389 262 2954 | | 1 | KAMALI MİL UÇ BİLYA ALT PULU | THRUST WASHER | 0,70mm | (B)(C)(D) | ♦ | ♦ | ♦ | ♦ | ♦ | | | |
| 68 | K21.04129 | 389 262 3054 | | 1 | KAMALI MİL UÇ BİLYA ALT PULU | THRUST WASHER | 0,60mm | (B)(C)(D) | ♦ | ♦ | ♦ | ♦ | ♦ | | | |
| 68 | K21.04122 | 389 262 5752 | | 1 | KAMALI MİL UÇ BİLYA ALT PULU | THRUST WASHER | 0,50mm | (B)(C)(D) | ♦ | ♦ | ♦ | ♦ | ♦ | | | |
| 68 | K21.04130 | 389 262 7954 | | 1 | KAMALI MİL UÇ BİLYA ALT PULU | THRUST WASHER | 0,30mm | (B)(C)(D) | ♦ | ♦ | ♦ | ♦ | ♦ | | | |
| 68 | K21.04123 | 389 262 5852 | | 1 | KAMALI MİL UÇ BİLYA ALT PULU | THRUST WASHER | 0,20mm | (B)(C)(D) | ♦ | ♦ | ♦ | ♦ | ♦ | | | |
| 68 | K21.04124 | 389 262 5952 | | 1 | KAMALI MİL UÇ BİLYA ALT PULU | THRUST WASHER | 0,10mm | (B)(C)(D) | ♦ | ♦ | ♦ | ♦ | ♦ | | | |
| 69 | K21.04010 | 389 262 2351 | | 1 | 4.VİTES ÖN BİLYA AYAR PULU | THRUST WASHER | 7,00mm | (B)(C)(D) | ♦ | ♦ | ♦ | ♦ | ♦ | | | |
| 70a | K21.03629 | 015 981 7605 | (015 981 2005) | 1 | 4.VİTES DİŞLİSİ ÖN BİLYA | ROLLER BEARING | 50X41mm | (A) | ♦ | ♦ | ♦ | ♦ | ♦ | ♦ | ♦ | ♦ |
| | | | (011 981 4705) | | | | | | | | | | | | | |
| | | | (011 981 5305) | | | | | | | | | | | | | |
| 70b | K21.03630 | 011 981 6005 | | 1 | 4.VİTES DİŞLİSİ ÖN BİLYA | ROLLER BEARING | 50X32mm | (B)(C) | ♦ | ♦ | ♦ | ♦ | ♦ | | | |
| 70c | K21.03633 | 002 981 7905 | (003 981 8305) | 1 | 4.VİTES DİŞLİSİ ÖN BİLYA | ROLLER BEARING | 50X90X32mm | (D) | ♦ | ♦ | ♦ | ♦ | ♦ | | | |
| | | | (004 981 4205) | | | | | | | | | | | | | |
| | | | (011 981 7605) | | | | | | | | | | | | | |

NOTES :
Parts encoded alphabetic and numaric are used together.

GEARBOX TYPE:
715240 - G210 - 16 / 14,2 - 0,83 EPS
715241 - 715242 -715252 - 715253 - G210 - 16 / 14,02 - 0,83
715500 - 715501- 715504 - G210 - 16 / 14,02 - 0,83

NOTLAR :
Alfabetik ve rakam ile kodlanan parçalar birlikte kullanılır.

ŞANZIMAN TİPLERİ:
715240 - G210 - 16 / 14,2 - 0,83 EPS
715241 - 715242 -715252 - 715253 - G210 - 16 / 14,02 - 0,83
715500 - 715501- 715504 - G210 - 16 / 14,02 - 0,83





Original parts names, oem numbers, symbols and descriptions used in this catalogue are for reference purposes only.

# GEARBOX G 210 - 16 / 14,2 - 0,83

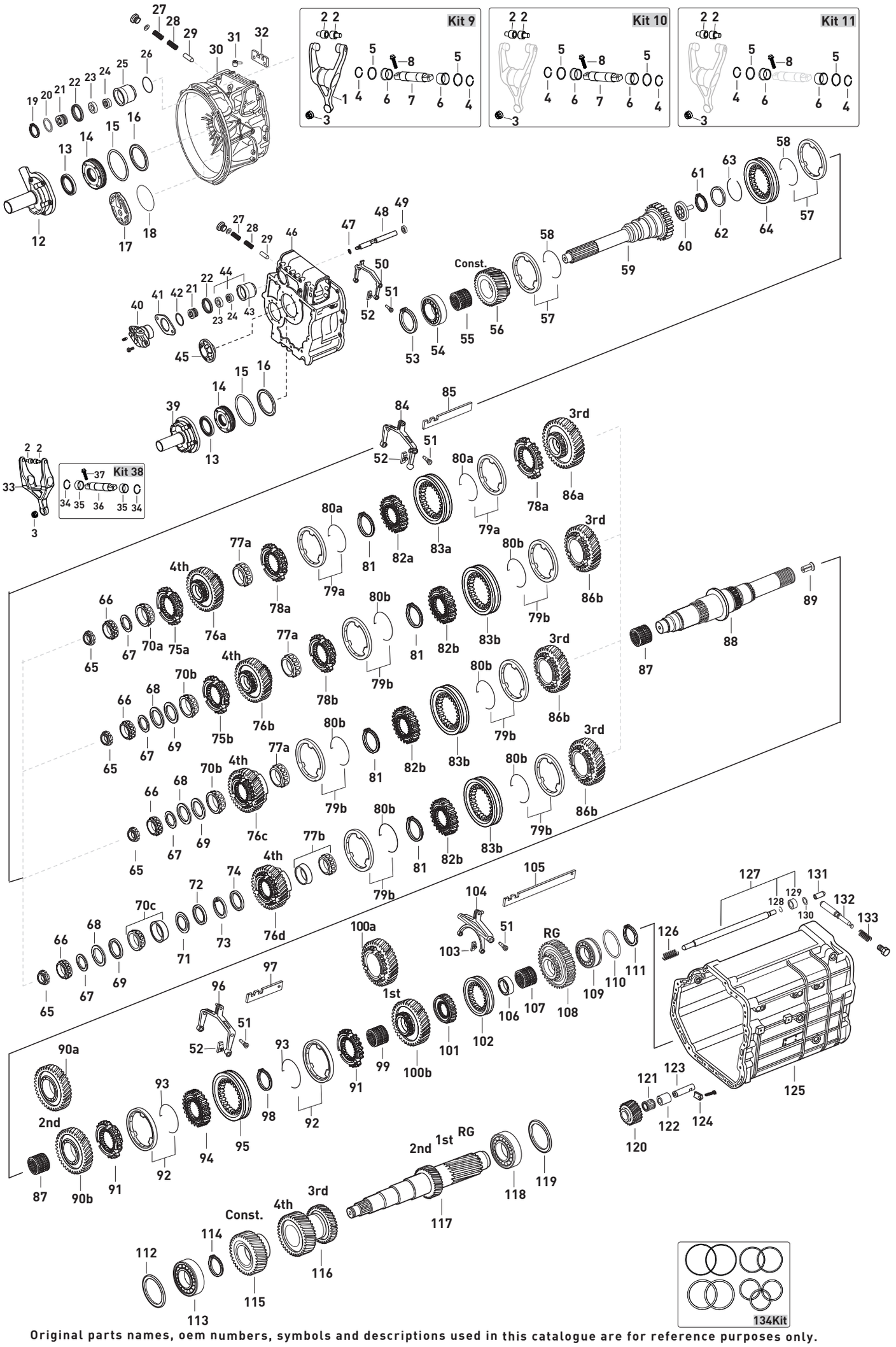


Original parts names, oem numbers, symbols and descriptions used in this catalogue are for reference purposes only.

| Fig. | Kacmaz No | Oem No | Oem Old No | Pcs. | Ürün Tanımı | Description | Sizes | Not | 715240 | 715241 | 715242 | 715252 | 715253 | 715500 | 715501 | 715504 |
|---|---|---|---|---|---|---|---|---|---|---|---|---|---|---|---|---|
| 71 | K21.04070 | 389 262 1854 | | 1 | 4.VİTES DİŞLİ BİLYA ARA SACI | SPACER WASHER | | (D) | ♦ | ♦ | ♦ | ♦ | ♦ | | | |
| 72 | K21.04056 | 389 262 1251 | | 1 | 4.VİTES BİLYA ARA AYAR PULU | THRUST WASHER | 2,20mm | (D) | ♦ | ♦ | ♦ | ♦ | ♦ | | | |
| 72 | K21.04055 | 389 262 2151 | | 1 | 4.VİTES BİLYA ARA AYAR PULU | THRUST WASHER | 2,15mm | (D) | ♦ | ♦ | ♦ | ♦ | ♦ | | | |
| 72 | K21.04054 | 389 262 1151 | | 1 | 4.VİTES BİLYA ARA AYAR PULU | THRUST WASHER | 2,10mm | (D) | ♦ | ♦ | ♦ | ♦ | ♦ | | | |
| 72 | K21.04053 | 389 262 2051 | | 1 | 4.VİTES BİLYA ARA AYAR PULU | THRUST WASHER | 2,05mm | (D) | ♦ | ♦ | ♦ | ♦ | ♦ | | | |
| 72 | K21.04052 | 389 262 1051 | | 1 | 4.VİTES BİLYA ARA AYAR PULU | THRUST WASHER | 2,00mm | (D) | ♦ | ♦ | ♦ | ♦ | ♦ | | | |
| 72 | K21.04051 | 389 262 1951 | | 1 | 4.VİTES BİLYA ARA AYAR PULU | THRUST WASHER | 1,95mm | (D) | ♦ | ♦ | ♦ | ♦ | ♦ | | | |
| 72 | K21.04050 | 389 262 0951 | | 1 | 4.VİTES BİLYA ARA AYAR PULU | THRUST WASHER | 1,90mm | (D) | ♦ | ♦ | ♦ | ♦ | ♦ | | | |
| 72 | K21.04049 | 389 262 1851 | | 1 | 4.VİTES BİLYA ARA AYAR PULU | THRUST WASHER | 1,85mm | (D) | ♦ | ♦ | ♦ | ♦ | ♦ | | | |
| 72 | K21.04048 | 389 262 0851 | | 1 | 4.VİTES BİLYA ARA AYAR PULU | THRUST WASHER | 1,80mm | (D) | ♦ | ♦ | ♦ | ♦ | ♦ | | | |
| 72 | K21.04125 | 389 262 1751 | | 1 | 4.VİTES BİLYA ARA AYAR PULU | THRUST WASHER | 1,75mm | (D) | ♦ | ♦ | ♦ | ♦ | ♦ | | | |
| 72 | K21.04157 | | | 1 | 4.VİTES BİLYA ARA AYAR PULU | THRUST WASHER | 1,60mm | (D) | ♦ | ♦ | ♦ | ♦ | ♦ | | | |
| 73 | K21.04339 | 387 268 0773 | | 1 | 4.VİTES DİŞLİ SEKMANI | RETAINING RING | 3,05mm | (D) | ♦ | ♦ | ♦ | ♦ | ♦ | | | |
| 73 | | 387 268 0873 | | 1 | 4.VİTES DİŞLİ SEKMANI | RETAINING RING | 3,08mm | (D) | ♦ | ♦ | ♦ | ♦ | ♦ | | | |
| 73 | | 387 268 0973 | | 1 | 4.VİTES DİŞLİ SEKMANI | RETAINING RING | 3,11mm | (D) | ♦ | ♦ | ♦ | ♦ | ♦ | | | |
| 73 | | 387 268 1073 | | 1 | 4.VİTES DİŞLİ SEKMANI | RETAINING RING | 3,14mm | (D) | ♦ | ♦ | ♦ | ♦ | ♦ | | | |
| 74 | K21.04057 | 389 262 2751 | | 1 | 4.VİTES BİLYA ARA AYAR PULU | THRUST WASHER | 5,40mm | (D) | ♦ | ♦ | ♦ | ♦ | ♦ | | | |
| 74 | K21.04058 | 389 262 2951 | | 1 | 4.VİTES BİLYA ARA AYAR PULU | THRUST WASHER | 5,50mm | (D) | ♦ | ♦ | ♦ | ♦ | ♦ | | | |
| 74 | K21.04059 | 389 262 3151 | | 1 | 4.VİTES BİLYA ARA AYAR PULU | THRUST WASHER | 5,60mm | (D) | ♦ | ♦ | ♦ | ♦ | ♦ | | | |
| 74 | K21.04060 | 389 262 3351 | | 1 | 4.VİTES BİLYA ARA AYAR PULU | THRUST WASHER | 5,70mm | (D) | ♦ | ♦ | ♦ | ♦ | ♦ | | | |
| 74 | K21.04061 | 389 262 3551 | | 1 | 4.VİTES BİLYA ARA AYAR PULU | THRUST WASHER | 5,80mm | (D) | ♦ | ♦ | ♦ | ♦ | ♦ | | | |
| 74 | K21.04062 | 389 262 3751 | | 1 | 4.VİTES BİLYA ARA AYAR PULU | THRUST WASHER | 5,90mm | (D) | ♦ | ♦ | ♦ | ♦ | ♦ | | | |
| 74 | K21.04063 | 389 262 3951 | | 1 | 4.VİTES BİLYA ARA AYAR PULU | THRUST WASHER | 6,00mm | (D) | ♦ | ♦ | ♦ | ♦ | ♦ | | | |
| 74 | K21.04064 | 389 262 4151 | | 1 | 4.VİTES BİLYA ARA AYAR PULU | THRUST WASHER | 6,10mm | (D) | ♦ | ♦ | ♦ | ♦ | ♦ | | | |
| 74 | K21.04065 | 389 262 4351 | | 1 | 4.VİTES BİLYA ARA AYAR PULU | THRUST WASHER | 6,20mm | (D) | ♦ | ♦ | ♦ | ♦ | ♦ | | | |
| 74 | K21.04066 | 389 262 4551 | | 1 | 4.VİTES BİLYA ARA AYAR PULU | THRUST WASHER | 6,30mm | (D) | ♦ | ♦ | ♦ | ♦ | ♦ | | | |
| 74 | K21.04067 | 389 262 4751 | | 1 | 4.VİTES BİLYA ARA AYAR PULU | THRUST WASHER | 6,40mm | (D) | ♦ | ♦ | ♦ | ♦ | ♦ | | | |
| 74 | K21.04068 | 389 262 4951 | | 1 | 4.VİTES BİLYA ARA AYAR PULU | THRUST WASHER | 6,50mm | (D) | ♦ | ♦ | ♦ | ♦ | ♦ | | | |
| 74 | K21.04069 | 389 262 5151 | | 1 | 4.VİTES BİLYA ARA AYAR PULU | THRUST WASHER | 6,60mm | (D) | ♦ | ♦ | ♦ | ♦ | ♦ | | | |
| 75a | K21.03024 | 389 262 5434 | (945 262 0334) | 1 | TAKVİYE SENKROMENÇ | ENGAGING RING | | (A)(1) | ♦ | ♦ | ♦ | ♦ | ♦ | ♦ | ♦ | ♦ |
| | | | (945 262 0134) | | | | | | | | | | | | | |
| 75a | K21.03147 | 945 262 7734 | (945 262 3634) | 1 | TAKVİYE SENKROMENÇ | ENGAGING RING | | (A)(2) | | | | | | ♦ | ♦ | ♦ |
| 75b | K21.03007 | 945 262 4034 | (389 262 5334) | 1 | TAKVİYE SENKROMENÇ | ENGAGING RING | | (B) | ♦ | ♦ | ♦ | ♦ | ♦ | | | |
| | | | (945 262 4434) | | | | | | | | | | | | | |
| 76a | K21.03026 | 945 262 8810 | (945 262 9310) | 1 | 4.VİTES DİŞLİSİ 29 DİŞ | GEAR 4th 29 T. | | (A) | ♦ | ♦ | ♦ | ♦ | ♦ | ♦ | ♦ | ♦ |
| | | | (945 262 9210) | | | | | | | | | | | | | |
| | | | (945 262 9117) | | | | | | | | | | | | | |
| | | | (945 262 0510) | | | | | | | | | | | | | |
| 76b | K21.03144 | 389 262 8710 | (389 262 8610) | 1 | 4.VİTES DİŞLİSİ 29 DİŞ | GEAR 4th 29 T. | | (B) | ♦ | ♦ | ♦ | ♦ | ♦ | | | |
| 76c | K21.03499 | 389 260 9719 | (389 260 2508) | 1 | 4.VİTES DİŞLİSİ 29 DİŞ | GEAR 4th 29 T. | | (C) | ♦ | ♦ | ♦ | ♦ | ♦ | | | |
| 76d | K21.03498 | 389 260 8908 | | 1 | 4.VİTES DİŞLİSİ 29 DİŞ | GEAR 4th 29 T. | | (D) | ♦ | ♦ | ♦ | ♦ | ♦ | | | |
| 77a | K21.03631 | 015 981 7705 | (014 981 1605) | 1 | 4.VİTES DİŞLİSİ ARKA BİLYA | ROLLER BEARING | 55X23mm | (A)(B)(C) | ♦ | ♦ | ♦ | ♦ | ♦ | ♦ | ♦ | ♦ |
| | | | (017 981 5705) | | | | | | | | | | | | | |
| 77b | K21.03662 | 011 981 7705 | (014 981 8505) | 1 | 4.VİTES DİŞLİSİ ARKA BİLYA | ROLLER BEARING | 55X90X23mm | (D) | ♦ | ♦ | ♦ | ♦ | ♦ | | | |
| | | | (012 981 1505) | | | | | | | | | | | | | |
| 78a | K21.03027 | 945 262 0534 | (389 262 5034) | 2 | 3./4.VİTES SENKROMENÇ | ENGAGING RING | | (A)(1) | ♦ | ♦ | ♦ | ♦ | ♦ | ♦ | ♦ | ♦ |
| 78a | K21.03146 | 945 262 8234 | (945 262 5434) | 2 | 3./4.VİTES SENKROMENÇ | ENGAGING RING | | (A)(2) | | | | | | ♦ | ♦ | ♦ |
| 78b | K21.03007 | 945 262 4034 | (389 262 5334) | 1 | 4.VİTES SENKROMENÇ | ENGAGING RING | | (B) | ♦ | ♦ | ♦ | ♦ | ♦ | | | |
| | | | (945 262 4434) | | | | | | | | | | | | | |
| 79a | K21.03016 | 389 262 0737 | (387 262 0937) | 2 | 3./4.VİTES FRENLEME (Mo) | SYNCHRONIZING CONE / Mo | | (A)(1) | ♦ | ♦ | ♦ | ♦ | ♦ | ♦ | ♦ | ♦ |
| | | | (389 262 1137) | | | | | | | | | | | | | |
| 79a | K21.06041 | 945 260 0650 | | 2 | 3./4.VİTES FRENLEME (C) | SYNCHRONIZING CONE / C | | (A)(1) | ♦ | ♦ | ♦ | ♦ | ♦ | ♦ | ♦ | ♦ |
| 79a | K21.03148 | 947 260 1945 | (947 260 4645) | 2 | 3./4.VİTES FRENLEME (Mo) | SYNCHRONIZING CONE / Mo | | (A)(2) | | | | | | ♦ | ♦ | ♦ |

NOTES :
Parts encoded alphabetic and numaric are used together.

GEARBOX TYPE:
715240 - G210 - 16 / 14,2 - 0,83 EPS
715241 - 715242 -715252 - 715253 - G210 - 16 / 14,02 - 0,83
715500 - 715501- 715504 - G210 - 16 / 14,02 - 0,83

NOTLAR :
Alfabetik ve rakam ile kodlanan parçalar birlikte kullanılır.

ŞANZIMAN TİPLERİ:
715240 - G210 - 16 / 14,2 - 0,83 EPS
715241 - 715242 -715252 - 715253 - G210 - 16 / 14,02 - 0,83
715500 - 715501- 715504 - G210 - 16 / 14,02 - 0,83





Original parts names, oem numbers, symbols and descriptions used in this catalogue are for reference purposes only.

# GEARBOX G 210 - 16 / 14,2 - 0,83

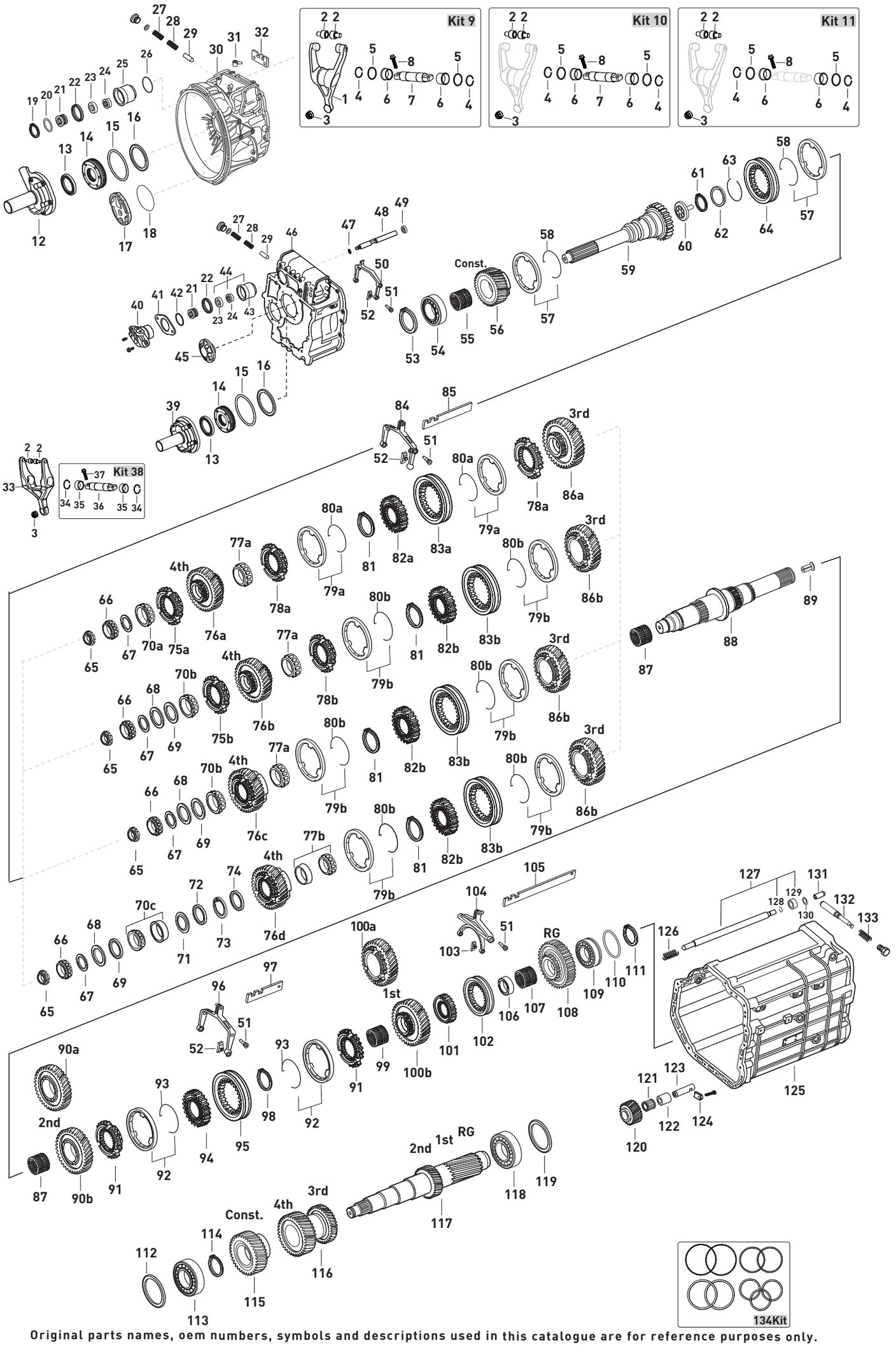




Original parts names, oem numbers, symbols and descriptions used in this catalogue are for reference purposes only.

| Fig. | Kacmaz No | Oem No | Oem Old No | Pcs. | Ürün Tanımı | Description | Sizes | Not | 715240 | 715241 | 715242 | 715252 | 715253 | 715500 | 715501 | 715504 |
|---|---|---|---|---|---|---|---|---|---|---|---|---|---|---|---|---|
| 79b | K21.03015 | 389 262 0637 | (387 262 0837) | 2 | 3./4.VİTES FRENLEME (Mo) | SYNCHRONIZING CONE / Mo | | (B)(C)(D) | ♦ | ♦ | ♦ | ♦ | ♦ | | | |
| 80a | K21.03055 | 387 262 0893 | (387 262 0793) | 2 | FRENLEME TELİ | SPRING | | (A) | ♦ | ♦ | ♦ | ♦ | ♦ | ♦ | ♦ | ♦ |
| 80b | K21.03044 | 387 262 1093 | (387 262 0693) | 2 | FRENLEME TELİ | SPRING | | (B)(C)(D) | ♦ | ♦ | ♦ | ♦ | ♦ | | | |
| | | | (960 262 1393) | | | | | | | | | | | | | |
| 81 | K21.04343 | 387 262 2073 | | 1 | 3./4.VİTES YILDIZ DİŞLİ SEKMANI | RETAINING RING | 2,40mm | | ♦ | ♦ | ♦ | ♦ | ♦ | ♦ | ♦ | ♦ |
| 81 | K21.06687 | 387 262 2173 | | 1 | 3./4.VİTES YILDIZ DİŞLİ SEKMANI | RETAINING RING | 2,45mm | | ♦ | ♦ | ♦ | ♦ | ♦ | ♦ | ♦ | ♦ |
| 81 | K21.04342 | 007 994 0041 | (387 262 2273) | 1 | 3./4.VİTES YILDIZ DİŞLİ SEKMANI | RETAINING RING | 2,50mm | | ♦ | ♦ | ♦ | ♦ | ♦ | ♦ | ♦ | ♦ |
| 81 | K21.04359 | 387 262 2373 | | 1 | 3./4.VİTES YILDIZ DİŞLİ SEKMANI | RETAINING RING | 2,55mm | | ♦ | ♦ | ♦ | ♦ | ♦ | ♦ | ♦ | ♦ |
| 81 | K21.04345 | 387 262 2473 | | 1 | 3./4.VİTES YILDIZ DİŞLİ SEKMANI | RETAINING RING | 2,60mm | | ♦ | ♦ | ♦ | ♦ | ♦ | ♦ | ♦ | ♦ |
| 81 | K21.07021 | 387 262 2573 | | 1 | 3./4.VİTES YILDIZ DİŞLİ SEKMANI | RETAINING RING | 2,65mm | | ♦ | ♦ | ♦ | ♦ | ♦ | ♦ | ♦ | ♦ |
| 81 | K21.04344 | 387 262 7973 | | 1 | 3./4.VİTES YILDIZ DİŞLİ SEKMANI | RETAINING RING | 2,70mm | | ♦ | ♦ | ♦ | ♦ | ♦ | ♦ | ♦ | ♦ |
| 81 | K21.07022 | 387 262 8073 | | 1 | 3./4.VİTES YILDIZ DİŞLİ SEKMANI | RETAINING RING | 2,75mm | | ♦ | ♦ | ♦ | ♦ | ♦ | ♦ | ♦ | ♦ |
| 81 | K21.06588 | 387 262 8173 | | 1 | 3./4.VİTES YILDIZ DİŞLİ SEKMANI | RETAINING RING | 2,80mm | | ♦ | ♦ | ♦ | ♦ | ♦ | ♦ | ♦ | ♦ |
| 82a | K21.03149 | 389 262 4735 | (389 262 4635) | 1 | 3./4.VİTES YILDIZ DİŞLİ | SYNCHRONIZER HUB | | (A) | ♦ | ♦ | ♦ | ♦ | ♦ | ♦ | ♦ | ♦ |
| 82b | K21.03150 | 389 262 2835 | | 1 | 3./4.VİTES YILDIZ DİŞLİ | SYNCHRONIZER HUB | | (B)(C)(D) | ♦ | ♦ | ♦ | ♦ | ♦ | | | |
| 83a | K21.03009 | 945 262 2723 | (945 262 0423) | 1 | 3./4.VİTES HALKA | ENGAGING SLEEVE | | (A)(1) | ♦ | ♦ | ♦ | ♦ | ♦ | ♦ | ♦ | ♦ |
| | | | (389 262 2623) | | | | | | | | | | | | | |
| 83a | K21.03151 | 945 262 6523 | (930 262 0523) | 1 | 3./4.VİTES HALKA | ENGAGING SLEEVE | | (A)(2) | | | | | | ♦ | ♦ | ♦ |
| 83b | K21.03002 | 945 262 2823 | (945 262 0323) | 1 | 3./4.VİTES HALKA | ENGAGING SLEEVE | | (B)(C)(D) | ♦ | ♦ | ♦ | ♦ | ♦ | | | |
| | | | (945 262 0623) | | | | | | | | | | | | | |
| | | | (389 262 4123) | | | | | | | | | | | | | |
| | | | (389 262 2723) | | | | | | | | | | | | | |
| 84 | K21.06405 | 945 260 1030 | (945 265 0802) | 1 | 3./4.VİTES HİLALİ | SHIFTING FORK 3rd/4th | | (A) | | | | | | ♦ | ♦ | ♦ |
| 84 | | 389 260 5530 | | 1 | 3./4.VİTES HİLALİ | SHIFTING FORK 3rd/4th | | (A) | ♦ | ♦ | ♦ | ♦ | ♦ | | | |
| 84 | | 389 260 3830 | (389 260 3630) | 1 | 3./4.VİTES HİLALİ | SHIFTING FORK 3rd/4th | | (B)(C)(D) | ♦ | ♦ | ♦ | ♦ | ♦ | | | |
| 85 | | 945 265 0404 | (945 265 3204) | 1 | 3./4.VİTES HİLAL ÇITASI | SHIFTING ROD 3rd/4th | | | | | | | | ♦ | ♦ | ♦ |
| 85 | | 389 265 7904 | | 1 | 3./4.VİTES HİLAL ÇITASI | SHIFTING ROD 3rd/4th | | | ♦ | ♦ | ♦ | ♦ | ♦ | | | |
| 86a | K21.03152 | 945 262 3513 | (945 262 3413) | 1 | 3.VİTES DİŞLİSİ 34 DİŞ | GEAR 3rd 34 T. | | (A) | ♦ | ♦ | ♦ | ♦ | ♦ | ♦ | ♦ | ♦ |
| | | | (930 262 0713) | | | | | | | | | | | | | |
| 86b | K21.03154 | 389 262 1813 | | 1 | 3.VİTES DİŞLİSİ 34 DİŞ | GEAR 3rd 34 T. | | (B)(C)(D) | ♦ | ♦ | ♦ | ♦ | ♦ | | | |
| 87 | K21.03810 | 018 981 6610 | (010 981 5310) | 2 | 2./3.VİTES MASURA BİLYA | NEEDLE BEARING | 85X93X53mm | | ♦ | ♦ | ♦ | ♦ | ♦ | ♦ | ♦ | ♦ |
| 88 | K21.03156 | 945 262 4505 | | 1 | KAMALI MİL | MAIN SHAFT | | (A)(5) | ♦ | ♦ | ♦ | ♦ | ♦ | ♦ | ♦ | ♦ |
| 88 | K21.03029 | 945 262 3605 | (945 262 3505) | 1 | KAMALI MİL | MAIN SHAFT | | (A)(6) | ♦ | ♦ | ♦ | ♦ | ♦ | ♦ | ♦ | ♦ |
| 88 | K21.06042 | 930 262 1205 | (930 262 2405) | 1 | KAMALI MİL | MAIN SHAFT | | (A)(7) | | | | | | ♦ | ♦ | ♦ |
| 88 | K21.03157 | 389 262 2405 | | 1 | KAMALI MİL | MAIN SHAFT | | (B)(C)(D)(8) | ♦ | ♦ | ♦ | ♦ | ♦ | | | |
| 89 | K21.04364 | 001 990 2759 | | 1 | KAMALI MİL YAĞ BORUSU | OIL PIPE | | (A)(7) | | | | | | ♦ | ♦ | ♦ |
| 90a | K21.03159 | 389 260 4919 | (389 262 2112) | 1 | 2.VİTES DİŞLİSİ 39 DİŞ | GEAR 2nd 39 T. | | (B)(C)(D) | ♦ | ♦ | ♦ | ♦ | ♦ | | | |
| | | | (389 262 4734) | | | | | | | | | | | | | |
| 90b | K21.03158 | 389 262 2812 | (389 262 2512) | 1 | 2.VİTES DİŞLİSİ 39 DİŞ | GEAR 2nd 39 T. | | (A) | | | | | | ♦ | ♦ | ♦ |
| | | | (389 262 3712) | | | | | | | | | | | | | |
| | | | (945 262 3112) | | | | | | | | | | | | | |
| 91 | K21.03025 | 945 262 0434 | (389 262 0034) | 2 | 1./2.VİTES SENKROMENÇ | ENGAGING RING | | (1) | ♦ | ♦ | ♦ | ♦ | ♦ | ♦ | ♦ | ♦ |
| 91 | K21.03160 | 945 262 5534 | | 2 | 1./2.VİTES SENKROMENÇ | ENGAGING RING | | (2) | | | | | | ♦ | ♦ | ♦ |
| 92 | K21.03016 | 389 262 0737 | (387 262 0937) | 2 | 1./2.VİTES FRENLEME (Mo) | SYNCHRONIZING CONE / Mo | | (1) | ♦ | ♦ | ♦ | ♦ | ♦ | ♦ | ♦ | ♦ |
| | | | (389 262 1137) | | | | | | | | | | | | | |
| 92 | K21.06041 | 945 260 0650 | | 2 | 1./2.VİTES FRENLEME (C) | SYNCHRONIZING CONE / C | | (1) | ♦ | ♦ | ♦ | ♦ | ♦ | ♦ | ♦ | ♦ |
| 92 | K21.03148 | 947 260 1945 | (947 260 4645) | 2 | 1./2.VİTES FRENLEME (Mo) | SYNCHRONIZING CONE / Mo | | (2) | | | | | | ♦ | ♦ | ♦ |
| | | | (946 262 6137) | | | | | | | | | | | | | |
| 93 | K21.03055 | 387 262 0893 | (387 262 0793) | 2 | FRENLEME TELİ | SPRING | | | ♦ | ♦ | ♦ | ♦ | ♦ | ♦ | ♦ | ♦ |
| 94 | K21.03161 | 389 262 2535 | (945 262 0135) | 1 | 1./2.VİTES YILDIZ DİŞLİ | SYNCRONIZER HUB | | | ♦ | ♦ | ♦ | ♦ | ♦ | ♦ | ♦ | ♦ |
| 95 | K21.03009 | 945 262 2723 | (945 262 0423) | 1 | 1./2.VİTES HALKA | ENGAGING SLEEVE | | (1) | ♦ | ♦ | ♦ | ♦ | ♦ | ♦ | ♦ | ♦ |
| | | | (389 262 2623) | | | | | | | | | | | | | |
| 95 | K21.03151 | 945 262 6523 | (930 262 0523) | 1 | 1./2.VİTES HALKA | ENGAGING SLEEVE | | (2) | | | | | | ♦ | ♦ | ♦ |

NOTES :
Parts encoded alphabetic and numaric are used together.

GEARBOX TYPE:
715240 - G210 - 16 / 14,2 - 0,83 EPS
715241 - 715242 -715252 - 715253 - G210 - 16 / 14,02 - 0,83
715500 - 715501- 715504 - G210 - 16 / 14,02 - 0,83

NOTLAR :
Alfabetik ve rakam ile kodlanan parçalar birlikte kullanılır.

ŞANZIMAN TİPLERİ:
715240 - G210 - 16 / 14,2 - 0,83 EPS
715241 - 715242 -715252 - 715253 - G210 - 16 / 14,02 - 0,83
715500 - 715501- 715504 - G210 - 16 / 14,02 - 0,83





Original parts names, oem numbers, symbols and descriptions used in this catalogue are for reference purposes only.

# GEARBOX G 210 - 16 / 14,2 - 0,83

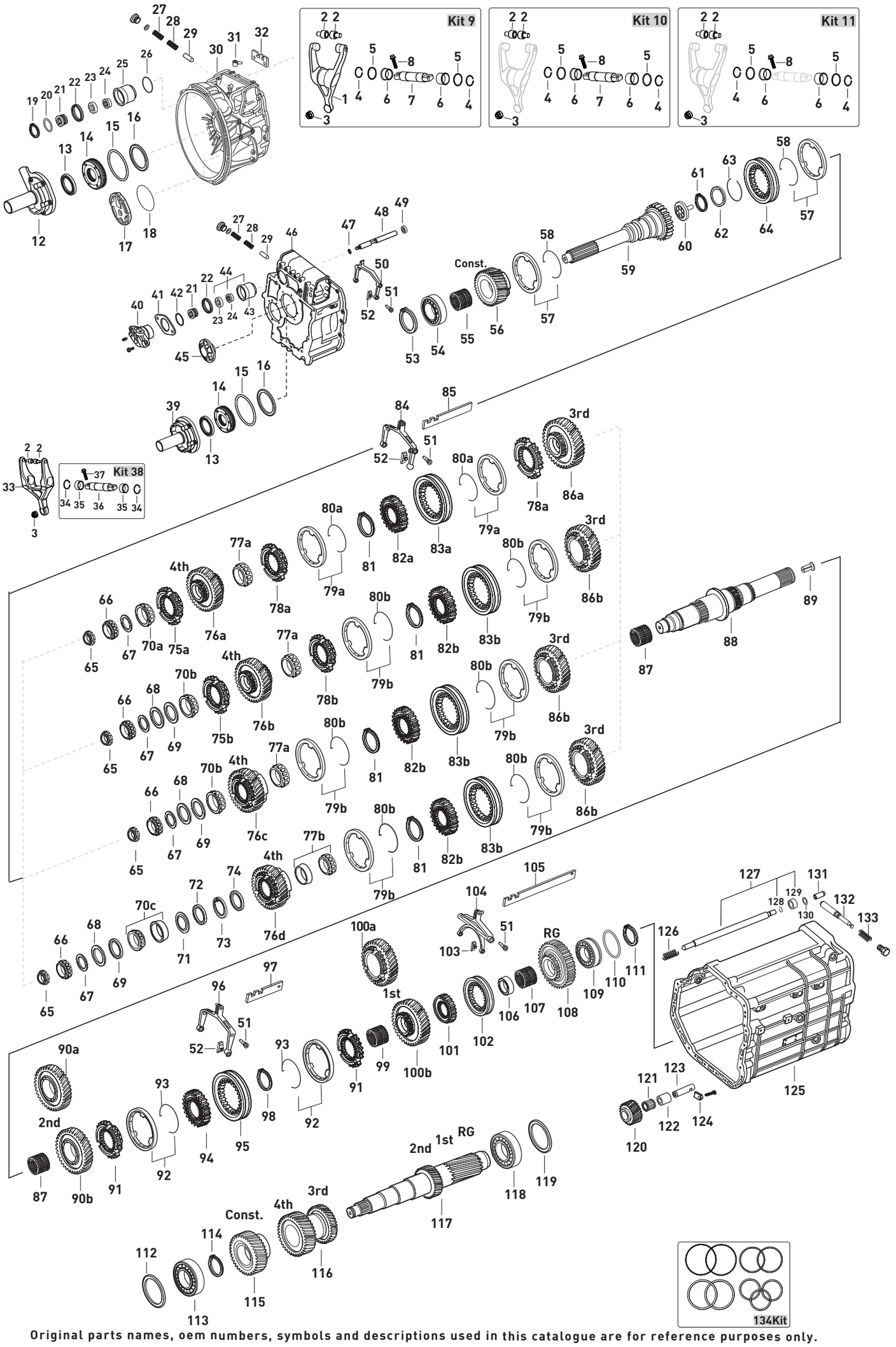


Original parts names, oem numbers, symbols and descriptions used in this catalogue are for reference purposes only.

| Fig. | Kacmaz No | Oem No | Oem Old No | Pcs. | Ürün Tanımı | Description | Sizes | Not | 715240 | 715241 | 715242 | 715252 | 715253 | 715500 | 715501 | 715504 |
|---|---|---|---|---|---|---|---|---|---|---|---|---|---|---|---|---|
| 96 | K21.06258 | 945 260 0230 | (945 260 0330) | 1 | 1./2.VİTES HİLALİ | SHIFTING FORK 1st/2nd | | (A) | | | | | | ♦ | ♦ | ♦ |
| | | | (945 265 0301) | | | | | | | | | | | | | |
| 96 | | 389 260 4530 | | 1 | 1./2.VİTES HİLALİ | SHIFTING FORK 1st/2nd | | (B)(C)(D) | ♦ | ♦ | ♦ | ♦ | ♦ | | | |
| 97 | K21.06702 | 945 265 2704 | (945 265 0304) | 1 | 1./2.VİTES HİLAL ÇITASI | SHIFTING ROD 1st/2nd | | (A) | | | | | | ♦ | ♦ | ♦ |
| | | | (945 265 1304) | | | | | | | | | | | | | |
| | | | (945 265 1204) | | | | | | | | | | | | | |
| 97 | | 389 265 7804 | | 1 | 1./2.VİTES HİLAL ÇITASI | SHIFTING ROD 1st/2nd | | (B)(C)(D) | ♦ | ♦ | ♦ | ♦ | ♦ | | | |
| 98 | K21.04343 | 387 262 2073 | | 1 | 1./2.VİTES YILDIZ DİŞLİ SEKMANI | RETAINING RING | 2,40mm | | ♦ | ♦ | ♦ | ♦ | ♦ | ♦ | ♦ | ♦ |
| 98 | K21.06687 | 387 262 2173 | | 1 | 1./2.VİTES YILDIZ DİŞLİ SEKMANI | RETAINING RING | 2,45mm | | ♦ | ♦ | ♦ | ♦ | ♦ | ♦ | ♦ | ♦ |
| 98 | K21.04342 | 007 994 0041 | (387 262 2273) | 1 | 1./2.VİTES YILDIZ DİŞLİ SEKMANI | RETAINING RING | 2,50mm | | ♦ | ♦ | ♦ | ♦ | ♦ | ♦ | ♦ | ♦ |
| 98 | K21.04359 | 387 262 2373 | | 1 | 1./2.VİTES YILDIZ DİŞLİ SEKMANI | RETAINING RING | 2,55mm | | ♦ | ♦ | ♦ | ♦ | ♦ | ♦ | ♦ | ♦ |
| 98 | K21.04345 | 387 262 2473 | | 1 | 1./2.VİTES YILDIZ DİŞLİ SEKMANI | RETAINING RING | 2,60mm | | ♦ | ♦ | ♦ | ♦ | ♦ | ♦ | ♦ | ♦ |
| 98 | K21.07021 | 387 262 2573 | | 1 | 1./2.VİTES YILDIZ DİŞLİ SEKMANI | RETAINING RING | 2,65mm | | ♦ | ♦ | ♦ | ♦ | ♦ | ♦ | ♦ | ♦ |
| 98 | K21.04344 | 387 262 7973 | | 1 | 1./2.VİTES YILDIZ DİŞLİ SEKMANI | RETAINING RING | 2,70mm | | ♦ | ♦ | ♦ | ♦ | ♦ | ♦ | ♦ | ♦ |
| 98 | K21.07022 | 387 262 8073 | | 1 | 1./2.VİTES YILDIZ DİŞLİ SEKMANI | RETAINING RING | 2,75mm | | ♦ | ♦ | ♦ | ♦ | ♦ | ♦ | ♦ | ♦ |
| 98 | K21.06588 | 387 262 8173 | | 1 | 1./2.VİTES YILDIZ DİŞLİ SEKMANI | RETAINING RING | 2,80mm | | ♦ | ♦ | ♦ | ♦ | ♦ | ♦ | ♦ | ♦ |
| 99 | K21.03839 | 945 981 0010 | (018 981 8110) | 1 | 1.VİTES MASURA BİLYA | NEEDLE CAGE | 75X83X48mm | (A)(5)(7) | | | | | | ♦ | ♦ | ♦ |
| | | | (018 981 7610) | | | | | | | | | | | | | |
| 99 | K21.03817 | 019 981 4410 | (007 981 4210) | 1 | 1.VİTES MASURA BİLYA | NEEDLE CAGE | 75X83X55mm | (A)(B)(C)(D) (6)(8) | ♦ | ♦ | ♦ | ♦ | ♦ | ♦ | ♦ | ♦ |
| | | | (008 981 8310) | | | | | | | | | | | | | |
| | | | (009 981 0010) | | | | | | | | | | | | | |
| 100a | | 945 260 1608 | (389 260 6108) | 1 | 1.VİTES DİŞLİSİ 44 DİŞ | GEAR 1st 44 T. | | (B)(C)(D) | ♦ | ♦ | ♦ | ♦ | ♦ | | | |
| 100b | K21.03162 | 946 262 0811 | (389 262 2711) | 1 | 1.VİTES DİŞLİSİ 44 DİŞ | GEAR 1st 44 T. | | (A) | | | | | | ♦ | ♦ | ♦ |
| | | | (946 262 0911) | | | | | | | | | | | | | |
| | | | (945 262 3111) | | | | | | | | | | | | | |
| | | | (389 262 2011) | | | | | | | | | | | | | |
| | | | (945 262 0811) | | | | | | | | | | | | | |
| 101 | K21.06995 | 945 262 3935 | | 1 | GERİ VİTES YILDIZ DİŞLİ | SYNCHRONIZER HUB | | (9) | | | | | | ♦ | ♦ | |
| 101 | K21.03163 | 945 262 3835 | | 1 | GERİ VİTES YILDIZ DİŞLİ | SYNCHRONIZER HUB | | (11) | | | | | | ♦ | ♦ | |
| 101 | K21.03059 | 389 262 0135 | | 1 | GERİ VİTES YILDIZ DİŞLİ | SYNCHRONIZER HUB | | (10)(12)(13) | ♦ | ♦ | ♦ | ♦ | ♦ | ♦ | ♦ | ♦ |
| 101 | K21.03164 | 389 262 3935 | | 1 | GERİ VİTES YILDIZ DİŞLİ | SYNCHRONIZER HUB | | (14) | | | | | | ♦ | ♦ | |
| 102 | K21.03060 | 389 262 1723 | (389 262 0023) | 1 | GERİ VİTES HALKASI | ENGAGING SLEEVE | | (10)(12) | | ♦ | ♦ | | ♦ | ♦ | ♦ | ♦ |
| 102 | K21.03061 | 389 262 1823 | (389 262 0923) | 1 | GERİ VİTES HALKASI | ENGAGING SLEEVE | | (9)(11)(13) (14) | ♦ | | | ♦ | | ♦ | ♦ | |
| 103 | K21.03410 | 947 265 0249 | (945 265 0149) | 2 | GERİ VİTES HİLAL PABUCU | SLIDING PAD | | | ♦ | ♦ | ♦ | ♦ | ♦ | ♦ | ♦ | ♦ |
| 104 | K21.06259 | 945 260 0430 | (945 265 0003) | 1 | GERİ VİTES HİLALİ | SHIFTING FORK RG | | | | | | | | ♦ | ♦ | ♦ |
| 104 | | 389 260 4830 | (389 260 3430) | 1 | GERİ VİTES HİLALİ | SHIFTING FORK | | | ♦ | ♦ | ♦ | ♦ | ♦ | | | |
| 105 | | 945 265 1004 | | 1 | GERİ VİTES HİLAL ÇITASI | SHIFTING ROD | | | | | | | | ♦ | ♦ | ♦ |
| 105 | | 945 265 1104 | (945 265 0204) | 1 | GERİ VİTES HİLAL ÇITASI | SHIFTING ROD | | | | | | | | | ♦ | ♦ |
| 105 | | 389 265 3504 | | 1 | GERİ VİTES HİLAL ÇITASI | SHIFTING ROD | | | ♦ | ♦ | ♦ | ♦ | ♦ | | | |
| 106 | K21.03065 | 389 262 0150 | | 1 | GERİ VİTES MASURA BİLYA ÇANAĞI | BEARING RACE | | (7)(9)(10) | | | | | | ♦ | ♦ | ♦ |
| 106 | K21.03112 | 389 262 2550 | (389 262 1650) | 1 | GERİ VİTES MASURA BİLYA ÇANAĞI | BEARING RACE | | (5)(6)(8)(11) (12)(13)(14) | ♦ | ♦ | ♦ | ♦ | ♦ | ♦ | ♦ | ♦ |
| | | | (389 262 0050) | | | | | | | | | | | | | |
| 107 | K21.03813 | 013 981 1810 | (013 981 2610) | 1 | GERİ VİTES MASURA BİLYA | NEEDLE CAGE | 78X86X33mm | (7)(9)(10) | | | | | | ♦ | ♦ | ♦ |
| 107 | K21.03803 | 009 981 1510 | (017 981 7810) | 1 | GERİ VİTES MASURA BİLYA | NEEDLE CAGE | 78X86X35mm | (5)(6)(8)(11) (12)(13)(14) | ♦ | ♦ | ♦ | ♦ | ♦ | ♦ | ♦ | ♦ |
| | | | (008 981 9310) | | | | | | | | | | | | | |
| | | | (012 981 9110) | | | | | | | | | | | | | |
| 108 | K21.06044 | 960 262 0033 | | 1 | GERİ VİTES DİŞLİSİ 40 DİŞ | REVERSE GEAR 40 T. | | (9)(7) | | | | | | ♦ | ♦ | |
| 108 | K21.06045 | 930 262 0233 | | 1 | GERİ VİTES DİŞLİSİ 40 DİŞ | REVERSE GEAR 40 T. | | (10)(7) | | | | | | ♦ | ♦ | ♦ |
| 108 | K21.03167 | 945 262 4433 | | 1 | GERİ VİTES DİŞLİSİ 40 DİŞ | REVERSE GEAR 40 T. | | (11)(5)(6) | | | | | | ♦ | ♦ | |
| 108 | K21.03165 | 945 262 3233 | (389 262 2033) | 1 | GERİ VİTES DİŞLİSİ 40 DİŞ | REVERSE GEAR 40 T. | | (12)(5)(6) | | ♦ | ♦ | | ♦ | ♦ | ♦ | ♦ |
| 108 | | 389 262 1733 | | 1 | GERİ VİTES DİŞLİSİ 40 DİŞ | REVERSE GEAR 40 T. | | (13)(8) | ♦ | | | ♦ | | | | |
| 108 | K21.03168 | 945 262 3333 | (389 262 2133) | 1 | GERİ VİTES DİŞLİSİ 40 DİŞ | REVERSE GEAR 40 T. | | (14)(5)(6) | | | | | | ♦ | ♦ | |
| 109 | K21.03661 | 002 981 8181 | | 1 | KAMALI MİL ARKA BİLYA | ROLLER BEARING | 60X130X35,2mm | (7)(9)(10) | | | | | | ♦ | ♦ | ♦ |

NOTES :
Parts encoded alphabetic and numaric are used together.

GEARBOX TYPE:
715240 - G210 - 16 / 14,2 - 0,83 EPS
715241 - 715242 -715252 - 715253 - G210 - 16 / 14,02 - 0,83
715500 - 715501- 715504 - G210 - 16 / 14,02 - 0,83

NOTLAR :
Alfabetik ve rakam ile kodlanan parçalar birlikte kullanılır.

ŞANZIMAN TİPLERİ:
715240 - G210 - 16 / 14,2 - 0,83 EPS
715241 - 715242 -715252 - 715253 - G210 - 16 / 14,02 - 0,83
715500 - 715501- 715504 - G210 - 16 / 14,02 - 0,83





Original parts names, oem numbers, symbols and descriptions used in this catalogue are for reference purposes only.

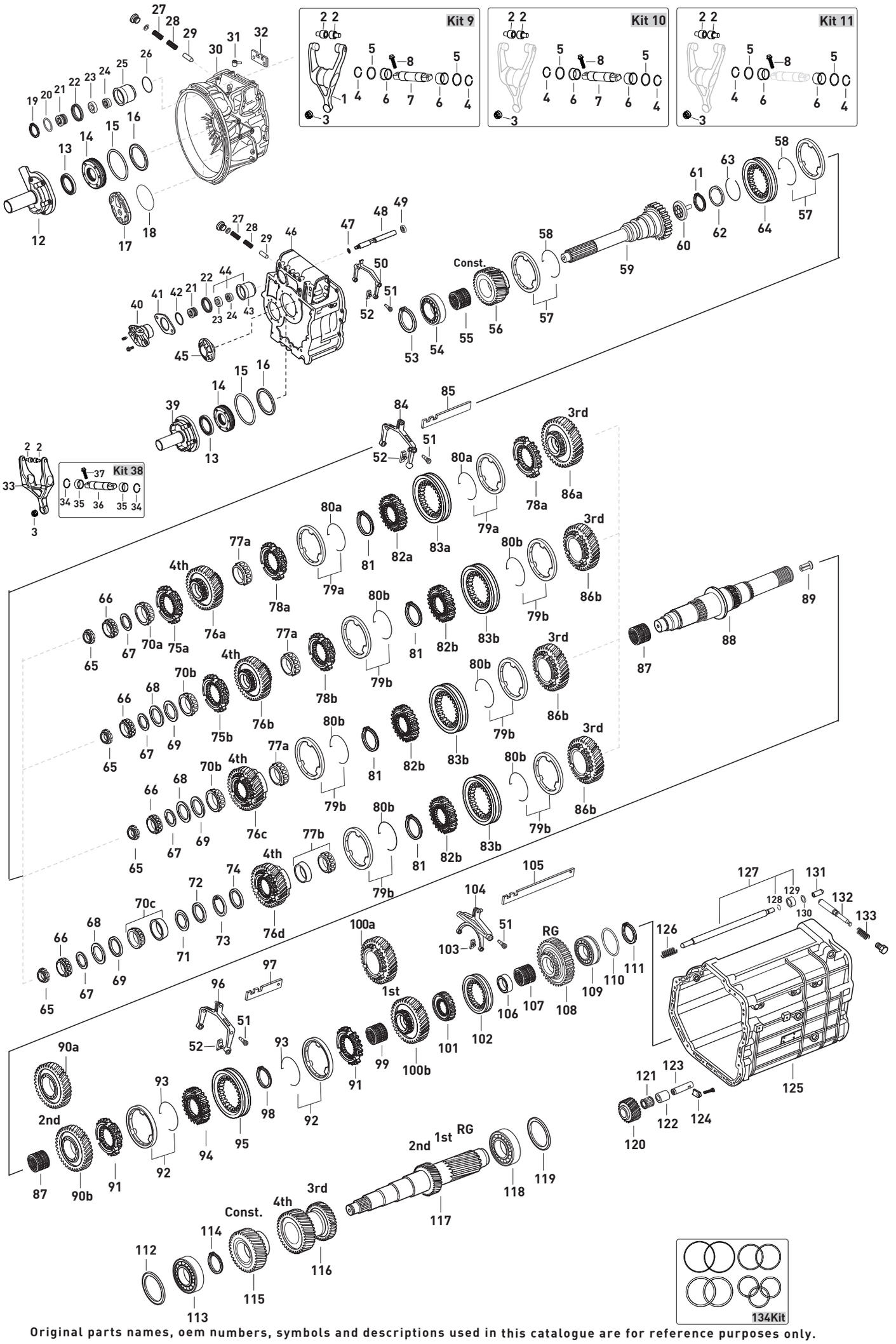


Original parts names, oem numbers, symbols and descriptions used in this catalogue are for reference purposes only.

| Fig. | Kacmaz No | Oem No | Oem Old No | Pcs. | Ürün Tanımı | Description | Sizes | Not | 715240 | 715241 | 715242 | 715252 | 715253 | 715500 | 715501 | 715504 |
|---|---|---|---|---|---|---|---|---|---|---|---|---|---|---|---|---|
| 109 | K21.03623 | 014 981 6105 | (016 981 1305) | 1 | KAMALI MİL ARKA BİLYA | ROLLER BEARING | 60X130X33,2mm | (5)(6)(8)(11) (12)(13)(14) | ♦ | ♦ | ♦ | ♦ | ♦ | ♦ | ♦ | ♦ |
| | | | (014 981 7505) | | | | | | | | | | | | | |
| 110 | K21.04182 | 389 262 3552 | | 1 | KAMALI MİL ARKA BİLYA RAYNELİ | THRUST WASHER | 0,10mm | | ♦ | ♦ | ♦ | ♦ | ♦ | ♦ | ♦ | ♦ |
| 110 | K21.04184 | 389 262 3652 | | 1 | KAMALI MİL ARKA BİLYA RAYNELİ | THRUST WASHER | 0,15mm | | ♦ | ♦ | ♦ | ♦ | ♦ | ♦ | ♦ | ♦ |
| 110 | K21.04152 | 389 262 3752 | | 1 | KAMALI MİL ARKA BİLYA RAYNELİ | THRUST WASHER | 0,20mm | | ♦ | ♦ | ♦ | ♦ | ♦ | ♦ | ♦ | ♦ |
| 110 | K21.94152 | | | 1 | KAMALI MİL ARKA BİLYA RAYNELİ | THRUST WASHER | 0,30mm | | ♦ | ♦ | ♦ | ♦ | ♦ | ♦ | ♦ | ♦ |
| 110 | K21.04183 | 389 262 3852 | | 1 | KAMALI MİL ARKA BİLYA RAYNELİ | THRUST WASHER | 0,40mm | | ♦ | ♦ | ♦ | ♦ | ♦ | ♦ | ♦ | ♦ |
| 110 | K21.94183 | | | 1 | KAMALI MİL ARKA BİLYA RAYNELİ | THRUST WASHER | 0,50mm | | ♦ | ♦ | ♦ | ♦ | ♦ | ♦ | ♦ | ♦ |
| 110 | K21.84183 | | | 1 | KAMALI MİL ARKA BİLYA RAYNELİ | THRUST WASHER | 0,60mm | | ♦ | ♦ | ♦ | ♦ | ♦ | ♦ | ♦ | ♦ |
| 110 | K21.74183 | | | 1 | KAMALI MİL ARKA BİLYA RAYNELİ | THRUST WASHER | 0,70mm | | ♦ | ♦ | ♦ | ♦ | ♦ | ♦ | ♦ | ♦ |
| 110 | K21.04185 | 389 262 3952 | | 1 | KAMALI MİL ARKA BİLYA RAYNELİ | THRUST WASHER | 0,80mm | | ♦ | ♦ | ♦ | ♦ | ♦ | ♦ | ♦ | ♦ |
| 110 | K21.06718 | 010 990 8382 | | 1 | KAMALI MİL ARKA BİLYA RAYNELİ | THRUST WASHER | 1,00mm | | ♦ | ♦ | ♦ | ♦ | ♦ | ♦ | ♦ | ♦ |
| 111 | K21.04331 | 007 994 1841 | (006 994 9941) | 1 | KAMALI MİL ARKA BİLYA SEKMANI | RETAINING RING | 2,50mm | | ♦ | ♦ | ♦ | ♦ | ♦ | ♦ | ♦ | ♦ |
| 112 | K21.04192 | 406 337 0252 | | 1 | GRUP MİLİ ÖN BİLYA RAYNELİ | THRUST WASHER | 0,10mm | | ♦ | ♦ | ♦ | ♦ | ♦ | ♦ | ♦ | ♦ |
| 112 | K21.04150 | 406 337 0352 | | 1 | GRUP MİLİ ÖN BİLYA RAYNELİ | THRUST WASHER | 0,20mm | | ♦ | ♦ | ♦ | ♦ | ♦ | ♦ | ♦ | ♦ |
| 112 | K21.94150 | | | 1 | GRUP MİLİ ÖN BİLYA RAYNELİ | THRUST WASHER | 0,25mm | | ♦ | ♦ | ♦ | ♦ | ♦ | ♦ | ♦ | ♦ |
| 112 | K21.04338 | 406 337 0452 | | 1 | GRUP MİLİ ÖN BİLYA RAYNELİ | THRUST WASHER | 0,30mm | | ♦ | ♦ | ♦ | ♦ | ♦ | ♦ | ♦ | ♦ |
| 112 | K21.04196 | 389 263 5352 | (389 263 3252) | 1 | GRUP MİLİ ÖN BİLYA RAYNELİ | THRUST WASHER | 0,40mm | | ♦ | ♦ | ♦ | ♦ | ♦ | ♦ | ♦ | ♦ |
| 112 | K21.04194 | 389 263 3352 | | 1 | GRUP MİLİ ÖN BİLYA RAYNELİ | THRUST WASHER | 0,45mm | | ♦ | ♦ | ♦ | ♦ | ♦ | ♦ | ♦ | ♦ |
| 112 | K21.06719 | 389 263 5652 | | 1 | GRUP MİLİ ÖN BİLYA RAYNELİ | THRUST WASHER | 0,49mm | | ♦ | ♦ | ♦ | ♦ | ♦ | ♦ | ♦ | ♦ |
| 112 | K21.04197 | 389 263 5852 | (389 263 3552) | 1 | GRUP MİLİ ÖN BİLYA RAYNELİ | THRUST WASHER | 0,55mm | | ♦ | ♦ | ♦ | ♦ | ♦ | ♦ | ♦ | ♦ |
| 112 | K21.04340 | 389 263 6052 | | 1 | GRUP MİLİ ÖN BİLYA RAYNELİ | THRUST WASHER | 0,61mm | | ♦ | ♦ | ♦ | ♦ | ♦ | ♦ | ♦ | ♦ |
| 112 | K21.04198 | 389 263 6352 | (389 263 3852) | 1 | GRUP MİLİ ÖN BİLYA RAYNELİ | THRUST WASHER | 0,70mm | | ♦ | ♦ | ♦ | ♦ | ♦ | ♦ | ♦ | ♦ |
| 112 | K21.04154 | 389 263 3952 | | 1 | GRUP MİLİ ÖN BİLYA RAYNELİ | THRUST WASHER | 0,75mm | | ♦ | ♦ | ♦ | ♦ | ♦ | ♦ | ♦ | ♦ |
| 112 | K21.04199 | 389 263 6852 | | 1 | GRUP MİLİ ÖN BİLYA RAYNELİ | THRUST WASHER | 0,85mm | | ♦ | ♦ | ♦ | ♦ | ♦ | ♦ | ♦ | ♦ |
| 112 | K21.04200 | 389 263 7352 | | 1 | GRUP MİLİ ÖN BİLYA RAYNELİ | THRUST WASHER | 1,00mm | | ♦ | ♦ | ♦ | ♦ | ♦ | ♦ | ♦ | ♦ |
| 112 | K21.04201 | 389 263 7852 | | 1 | GRUP MİLİ ÖN BİLYA RAYNELİ | THRUST WASHER | 1,15mm | | ♦ | ♦ | ♦ | ♦ | ♦ | ♦ | ♦ | ♦ |
| 112 | K21.04202 | 389 263 8352 | | 1 | GRUP MİLİ ÖN BİLYA RAYNELİ | THRUST WASHER | 1,30mm | | ♦ | ♦ | ♦ | ♦ | ♦ | ♦ | ♦ | ♦ |
| 113 | K21.03606 | 015 981 9005 | (014 981 1405) | 1 | GRUP MİLİ ÖN BİLYA | ROLLER BEARING | 50,8X100X35mm | | ♦ | ♦ | ♦ | ♦ | ♦ | ♦ | ♦ | ♦ |
| | | | (012 981 7405) | | | | | | | | | | | | | |
| | | | (012 981 5105) | | | | | | | | | | | | | |
| 114 | K21.06425 | 389 994 0041 | | 1 | GRUP MİLİ ÖN BİLYA SEKMANI | RETAINING RING | 2,50mm | | ♦ | ♦ | ♦ | ♦ | ♦ | ♦ | ♦ | ♦ |
| 115 | K21.03170 | 945 263 0710 | (945 263 0810) | 1 | TAKVİYE DİŞLİ KARŞILIĞI 31 DİŞ | CONSTANT GEAR 31 T. | | | ♦ | ♦ | ♦ | ♦ | ♦ | ♦ | ♦ | ♦ |
| | | | (389 263 1410) | | | | | | | | | | | | | |
| 116 | K21.03171 | 945 263 2913 | (945 263 0213) | 1 | 3./4.VİTES DİŞLİ KARŞILIĞI 27/34 DİŞ | DOUBLE GEAR 3rd/4th 27/34 T. | | (A) | ♦ | ♦ | ♦ | ♦ | ♦ | ♦ | ♦ | ♦ |
| | | | (945 263 1013) | | | | | | | | | | | | | |
| | | | (945 263 0513) | | | | | | | | | | | | | |
| | | | (945 263 1413) | | | | | | | | | | | | | |
| | | | (945 263 1513) | | | | | | | | | | | | | |
| | | | (945 263 7113) | | | | | | | | | | | | | |
| | | | (945 263 7013) | | | | | | | | | | | | | |
| | | | (945 263 6913) | | | | | | | | | | | | | |
| 116 | K21.03174 | 389 263 1913 | | 1 | 3./4.VİT.DİŞLİ KARŞILIĞI 27/34 DİŞ | DOUBLE GEAR 3rd/4th 27/34 T. | | (B)(C)(D) | ♦ | ♦ | ♦ | ♦ | ♦ | | | |
| 117 | K21.03175 | 945 263 2902 | (945 263 0902) | 1 | GRUP MİLİ 16/21 DİŞ | COUNTER SHAFT 16/21 T. | | | ♦ | ♦ | ♦ | ♦ | ♦ | ♦ | ♦ | ♦ |
| | | | (389 263 3102) | | | | | | | | | | | | | |
| | | | (389 263 2502) | | | | | | | | | | | | | |
| | | | (389 263 1602) | | | | | | | | | | | | | |
| | | | (389 263 1302) | | | | | | | | | | | | | |
| 118 | K21.03624 | 016 981 1205 | (012 981 9405) | 1 | GRUP MİLİ ARKA BİLYA | ROLLER BEARING | 60X130X33,8mm | | ♦ | ♦ | ♦ | ♦ | ♦ | ♦ | ♦ | ♦ |
| | | | (012 981 9205) | | | | | | | | | | | | | |
| 119 | K21.06697 | | | 1 | GRUP MİLİ ARKA BİLYA RAYNELİ | THRUST WASHER | 1,30mm | | ♦ | ♦ | ♦ | ♦ | ♦ | | | |
| 119 | K21.04232 | 389 263 5052 | | 1 | GRUP MİLİ ARKA BİLYA RAYNELİ | THRUST WASHER | 1,15mm | | ♦ | ♦ | ♦ | ♦ | ♦ | | | |
| 119 | K21.04231 | 389 263 4952 | | 1 | GRUP MİLİ ARKA BİLYA RAYNELİ | THRUST WASHER | 1,10mm | | ♦ | ♦ | ♦ | ♦ | ♦ | | | |

NOTES :
Parts encoded alphabetic and numaric are used together.

GEARBOX TYPE:
715240 - G210 - 16 / 14,2 - 0,83 EPS
715241 - 715242 -715252 - 715253 - G210 - 16 / 14,02 - 0,83
715500 - 715501- 715504 - G210 - 16 / 14,02 - 0,83

NOTLAR :
Alfabetik ve rakam ile kodlanan parçalar birlikte kullanılır.

ŞANZIMAN TİPLERİ:
715240 - G210 - 16 / 14,2 - 0,83 EPS
715241 - 715242 -715252 - 715253 - G210 - 16 / 14,02 - 0,83
715500 - 715501- 715504 - G210 - 16 / 14,02 - 0,83





Original parts names, oem numbers, symbols and descriptions used in this catalogue are for reference purposes only.

# GEARBOX G 210 - 16 / 14,2 - 0,83

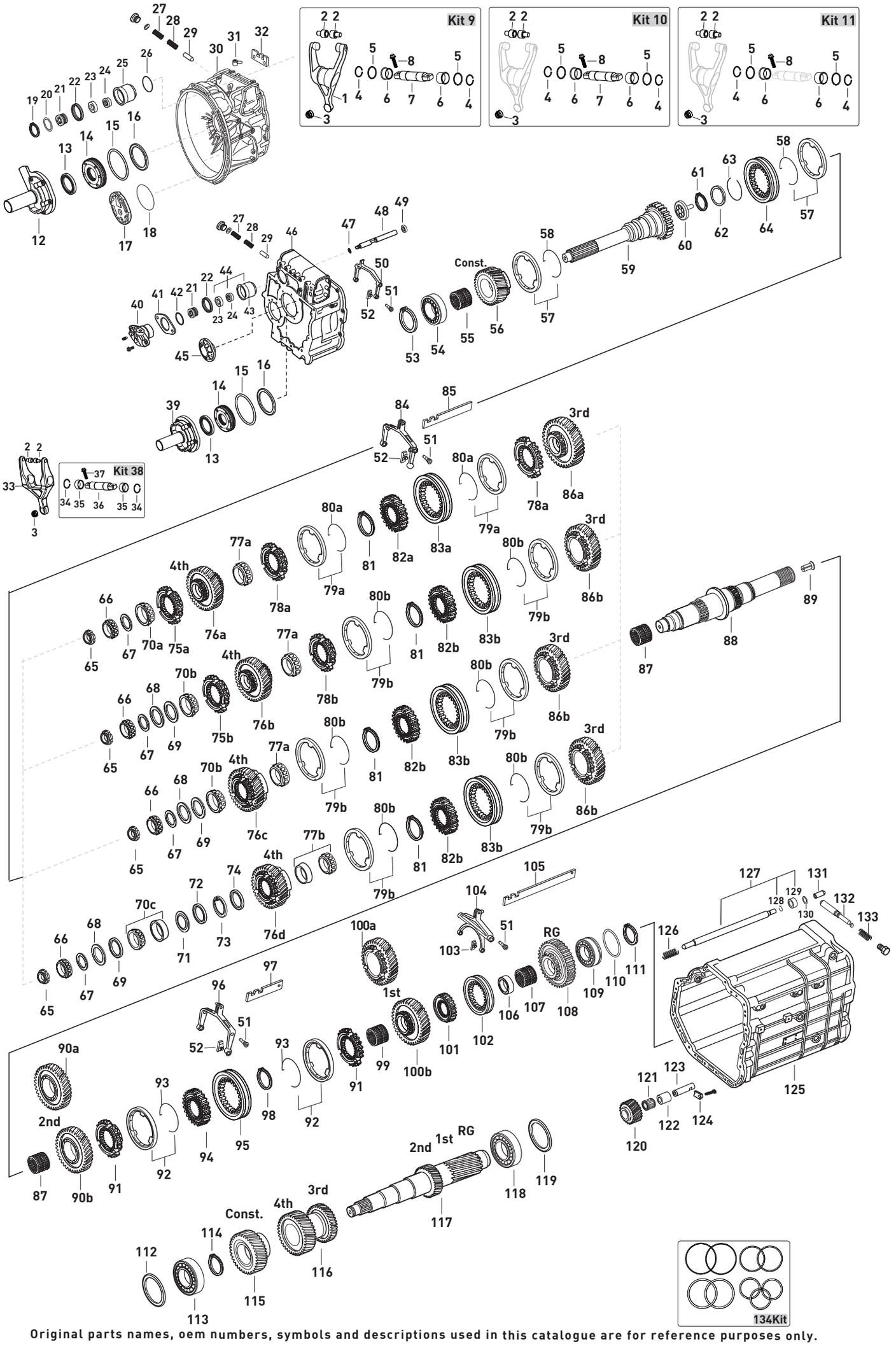




Original parts names, oem numbers, symbols and descriptions used in this catalogue are for reference purposes only.

| Fig. | Kacmaz No | Oem No | Oem Old No | Pcs. | Ürün Tanımı | Description | Sizes | Not | 715240 | 715241 | 715242 | 715252 | 715253 | 715500 | 715501 | 715504 |
|---|---|---|---|---|---|---|---|---|---|---|---|---|---|---|---|---|
| 119 | K21.04230 | 389 263 4852 | | 1 | GRUP MİLİ ARKA BİLYA RAYNELİ | THRUST WASHER | 1,05mm | | ♦ | ♦ | ♦ | ♦ | ♦ | | | |
| 119 | K21.04229 | 389 263 4752 | | 1 | GRUP MİLİ ARKA BİLYA RAYNELİ | THRUST WASHER | 1,00mm | | ♦ | ♦ | ♦ | ♦ | ♦ | | | |
| 119 | K21.04228 | 389 263 4652 | | 1 | GRUP MİLİ ARKA BİLYA RAYNELİ | THRUST WASHER | 0,95mm | | ♦ | ♦ | ♦ | ♦ | ♦ | | | |
| 119 | K21.04227 | 389 263 4552 | | 1 | GRUP MİLİ ARKA BİLYA RAYNELİ | THRUST WASHER | 0,90mm | | ♦ | ♦ | ♦ | ♦ | ♦ | | | |
| 119 | K21.04226 | 389 263 4452 | | 1 | GRUP MİLİ ARKA BİLYA RAYNELİ | THRUST WASHER | 0,85mm | | ♦ | ♦ | ♦ | ♦ | ♦ | | | |
| 119 | K21.04225 | 389 263 0552 | | 1 | GRUP MİLİ ARKA BİLYA RAYNELİ | THRUST WASHER | 0,80mm | | ♦ | ♦ | ♦ | ♦ | ♦ | | | |
| 119 | K21.04224 | 389 263 4352 | | 1 | GRUP MİLİ ARKA BİLYA RAYNELİ | THRUST WASHER | 0,75mm | | ♦ | ♦ | ♦ | ♦ | ♦ | | | |
| 119 | K21.04155 | 389 263 4252 | | 1 | GRUP MİLİ ARKA BİLYA RAYNELİ | THRUST WASHER | 0,70mm | | ♦ | ♦ | ♦ | ♦ | ♦ | | | |
| 119 | K21.04223 | 389 263 4152 | | 1 | GRUP MİLİ ARKA BİLYA RAYNELİ | THRUST WASHER | 0,65mm | | ♦ | ♦ | ♦ | ♦ | ♦ | | | |
| 119 | K21.04153 | 389 263 4052 | | 1 | GRUP MİLİ ARKA BİLYA RAYNELİ | THRUST WASHER | 0,60mm | | ♦ | ♦ | ♦ | ♦ | ♦ | | | |
| 119 | K21.06695 | | | 1 | GRUP MİLİ ARKA BİLYA RAYNELİ | THRUST WASHER | 0,55mm | | ♦ | ♦ | ♦ | ♦ | ♦ | | | |
| 119 | K21.06692 | | | 1 | GRUP MİLİ ARKA BİLYA RAYNELİ | THRUST WASHER | 0,50mm | | ♦ | ♦ | ♦ | ♦ | ♦ | | | |
| 119 | K21.06694 | | | 1 | GRUP MİLİ ARKA BİLYA RAYNELİ | THRUST WASHER | 0,45mm | | ♦ | ♦ | ♦ | ♦ | ♦ | | | |
| 119 | K21.06693 | 389 263 0452 | | 1 | GRUP MİLİ ARKA BİLYA RAYNELİ | THRUST WASHER | 0,40mm | | ♦ | ♦ | ♦ | ♦ | ♦ | | | |
| 119 | K21.04358 | | | 1 | GRUP MİLİ ARKA BİLYA RAYNELİ | THRUST WASHER | 0,30mm | | ♦ | ♦ | ♦ | ♦ | ♦ | | | |
| 119 | K21.04357 | | | 1 | GRUP MİLİ ARKA BİLYA RAYNELİ | THRUST WASHER | 0,20mm | | ♦ | ♦ | ♦ | ♦ | ♦ | | | |
| 119 | K21.04156 | 389 263 0152 | | 1 | GRUP MİLİ ARKA BİLYA RAYNELİ | THRUST WASHER | 0,10mm | | ♦ | ♦ | ♦ | ♦ | ♦ | | | |
| 120 | K21.06048 | 389 263 1031 | | 1 | KÜÇÜK GERİ VİTES DİŞLİSİ 21 DİŞ | REVERSE IDLER GEAR 21 T. | | | ♦ | ♦ | ♦ | ♦ | ♦ | ♦ | ♦ | ♦ |
| 121 | K21.03838 | 012 981 8910 | (012 981 9010) | 1 | KÜÇÜK GERİ VİTES MASURA BİLYA | NEEDLE CAGE | 42X50X51mm | | ♦ | ♦ | ♦ | ♦ | ♦ | ♦ | ♦ | ♦ |
| | | | (019 981 1310) | | | | | | | | | | | | | |
| 122 | K21.06031 | 389 263 0850 | | 1 | K.GERİ VİTES MASURA BİLYA ÇANAĞI | BUSHING | 18mm | | ♦ | ♦ | ♦ | ♦ | ♦ | ♦ | ♦ | ♦ |
| 123 | K21.06037 | 976 263 0030 | (976 263 1230) | 1 | KÜÇÜK GERİ VİTES PİMİ | PIN | | | ♦ | ♦ | ♦ | ♦ | ♦ | ♦ | ♦ | ♦ |
| 123 | | 389 263 0430 | | 1 | KÜÇÜK GERİ VİTES PİMİ | PIN | | | ♦ | ♦ | ♦ | ♦ | ♦ | | | |
| 124 | K21.07010 | 945 263 0041 | | 1 | KÜÇÜK GERİ VİTES PİM KİLİTLEMESİ | KEY | | | ♦ | ♦ | ♦ | ♦ | ♦ | ♦ | ♦ | ♦ |
| 125 | | 655 260 3623 | (389 261 3126) | 1 | ŞANZIMAN ORTA GÖVDE | HOUSING | | | ♦ | ♦ | ♦ | ♦ | ♦ | | | |
| 125 | | 930 260 2511 | (945 260 9911) | 1 | ŞANZIMAN ORTA GÖVDE | HOUSING | | | | | | | | ♦ | ♦ | ♦ |
| 126 | | 389 993 0501 | | 1 | KİLİTLEME MİL YAYI | SPRING | | | ♦ | ♦ | ♦ | ♦ | ♦ | ♦ | ♦ | ♦ |
| 127 | K21.06046 | 945 268 0225 | | 1 | KİLİTLEME MİLİ | SHIFTING ROD | | | | | | | | ♦ | ♦ | ♦ |
| 127 | K21.03394 | 389 268 4825 | | 1 | KİLİTLEME MİLİ | SHIFTING ROD | | | ♦ | ♦ | ♦ | ♦ | ♦ | | | |
| 128 | | 007993 012200 | | 1 | KİLİTLEME MİLİ SEKMANI | RETAINING RING | | | ♦ | ♦ | ♦ | ♦ | ♦ | ♦ | ♦ | ♦ |
| 129 | | 389 268 0051 | | 1 | KİLİTLEME MİL BURCU | SPACER RING | | | ♦ | ♦ | ♦ | ♦ | ♦ | ♦ | ♦ | ♦ |
| 130 | | 000998 006019 | | 1 | KİLİTLEME MİLİ AYAR RAYNELİ | FITTED WASHER | 0,10mm | | ♦ | ♦ | ♦ | ♦ | ♦ | ♦ | ♦ | ♦ |
| 130 | | 000998 006020 | | 1 | KİLİTLEME MİLİ AYAR RAYNELİ | FITTED WASHER | 0,20mm | | ♦ | ♦ | ♦ | ♦ | ♦ | ♦ | ♦ | ♦ |
| 130 | | 000988 006021 | | 1 | KİLİTLEME MİLİ AYAR RAYNELİ | FITTED WASHER | 0,30mm | | ♦ | ♦ | ♦ | ♦ | ♦ | ♦ | ♦ | ♦ |
| 130 | | 000988 006013 | | 1 | KİLİTLEME MİLİ AYAR RAYNELİ | FITTED WASHER | 0,50mm | | ♦ | ♦ | ♦ | ♦ | ♦ | ♦ | ♦ | ♦ |
| 130 | | 000988 006001 | | 1 | KİLİTLEME MİLİ AYAR RAYNELİ | FITTED WASHER | 1,00mm | | ♦ | ♦ | ♦ | ♦ | ♦ | ♦ | ♦ | ♦ |
| 131 | K21.03489 | 389 268 0674 | | 1 | KİLİTLEME MİL FİŞEĞİ | PIN | | | ♦ | ♦ | ♦ | ♦ | ♦ | ♦ | ♦ | ♦ |
| 132 | K21.03486 | 389 267 0974 | | 1 | AĞIR SERİ KİLİTLEME MİLİ | PIN | | MPS | ♦ | ♦ | ♦ | ♦ | ♦ | ♦ | ♦ | ♦ |
| 132 | K21.06004 | 945 267 0274 | (389 267 0274) | 1 | AĞIR SERİ KİLİTLEME MİLİ | PIN | | EPS | ♦ | ♦ | ♦ | ♦ | ♦ | ♦ | ♦ | ♦ |
| 133 | K21.06006 | 389 993 3401 | (389 993 0601) | 1 | AĞIR SERİ KİLİTLEME YAYI | SPRING | | | ♦ | ♦ | ♦ | ♦ | ♦ | ♦ | ♦ | ♦ |
| 134 | K21.04317 | | | Kit | RAYNEL TAKIMI | WASHER KIT | | | ♦ | ♦ | ♦ | ♦ | ♦ | ♦ | ♦ | ♦ |

NOTES :
Parts encoded alphabetic and numaric are used together.

GEARBOX TYPE:
715240 - G210 - 16 / 14,2 - 0,83 EPS
715241 - 715242 -715252 - 715253 - G210 - 16 / 14,02 - 0,83
715500 - 715501- 715504 - G210 - 16 / 14,02 - 0,83

NOTLAR :
Alfabetik ve rakam ile kodlanan parçalar birlikte kullanılır.

ŞANZIMAN TİPLERİ:
715240 - G210 - 16 / 14,2 - 0,83 EPS
715241 - 715242 -715252 - 715253 - G210 - 16 / 14,02 - 0,83
715500 - 715501- 715504 - G210 - 16 / 14,02 - 0,83





Original parts names, oem numbers, symbols and descriptions used in this catalogue are for reference purposes only.

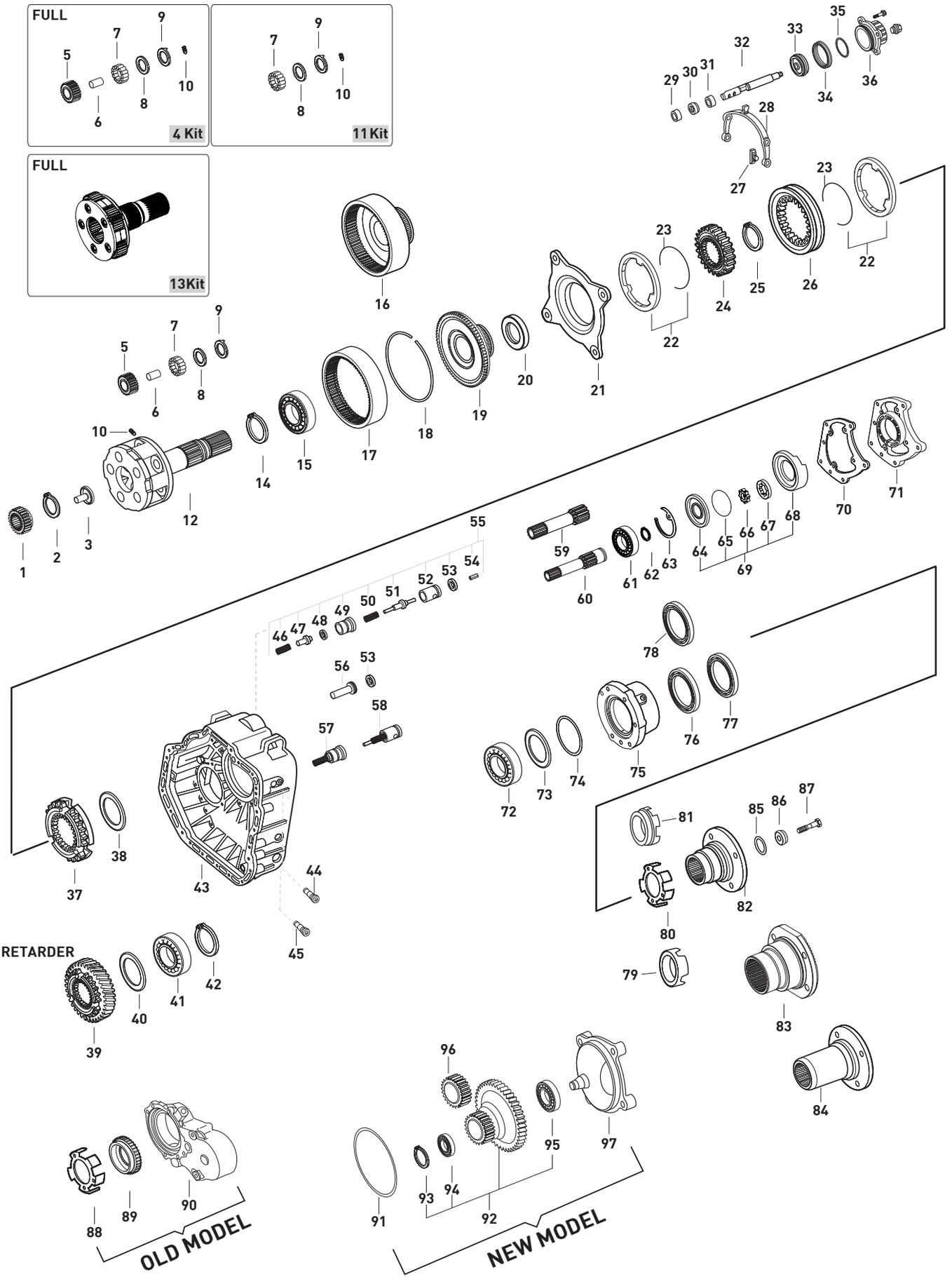






Original parts names, oem numbers, symbols and descriptions used in this catalogue are for reference purposes only.

| Fig. | Kacmaz No | Oem No | Oem Old No | Pcs. | Ürün Tanımı | Description | Sizes | Not | 715240 | 715241 | 715242 | 715252 | 715253 | 715500 | 715501 | 715504 |
|---|---|---|---|---|---|---|---|---|---|---|---|---|---|---|---|---|
| 1 | K21.03169 | 945 262 0909 | (389 262 0809) | 1 | GÜNEŞ DİŞLİ 25 DİŞ | SUN GEAR 25 T. | | (A) | ♦ | ♦ | ♦ | ♦ | ♦ | ♦ | ♦ | ♦ |
| | | | (389 262 0909) | | | | | | | | | | | | | |
| 1 | | 389 262 0509 | | 1 | GÜNEŞ DİŞLİ 25 DİŞ | SUN GEAR 25 T. | | (B) | ♦ | ♦ | ♦ | ♦ | ♦ | | | |
| 2 | K21.04115 | 000472 060000 | | 1 | HEYKEL YAĞ PİPET SEKMANI | SNAP RING | 2,00mm | | ♦ | ♦ | ♦ | ♦ | ♦ | ♦ | ♦ | ♦ |
| 3 | K21.03435 | 945 269 0834 | (389 269 4734) | 1 | ŞANZIMAN HEYKELİ YAĞ PİPETİ | OIL TUBE | | | ♦ | ♦ | ♦ | ♦ | ♦ | ♦ | ♦ | ♦ |
| 4 | K21.03178 | 946 260 0097 | (655 260 0197) | Kit | HEYKEL KOZA DİŞLİ TAKIMI | PLANETARY GEAR SET | | (A) | ♦ | ♦ | ♦ | ♦ | ♦ | ♦ | ♦ | ♦ |
| 4 | | 655 260 0097 | | Kit | HEYKEL KOZA DİŞLİ TAKIMI | PLANETARY GEAR SET | | (B) | ♦ | ♦ | ♦ | ♦ | ♦ | | | |
| 5 | K21.03436 | 945 262 0006 | | 5 | HEYKEL KOZA DİŞLİSİ 28 DİŞ | PLANETARY GEAR 28 T. | | (A) | ♦ | ♦ | ♦ | ♦ | ♦ | ♦ | ♦ | ♦ |
| 6 | K21.03437 | 389 262 0407 | | 5 | HEYKEL KOZA DİŞLİ PİMİ | PLANETARY GEAR PIN | | (A) | ♦ | ♦ | ♦ | ♦ | ♦ | ♦ | ♦ | ♦ |
| 7 | K21.03816 | 000 981 4186 | (000 981 4386) | 125 | HEYKEL KOZA DİŞLİ TANE BİLYA | NEEDLE ROLLER | D5X39,6 | | ♦ | ♦ | ♦ | ♦ | ♦ | ♦ | ♦ | ♦ |
| 8 | K21.04074 | 389 262 0162 | (389 262 6462) | 10 | HEYKEL KOZA DİŞLİ PULU | THRUST WASHER | | | ♦ | ♦ | ♦ | ♦ | ♦ | ♦ | ♦ | ♦ |
| | | | (389 262 0562) | | | | | | | | | | | | | |
| 9 | K21.04075 | 945 262 1162 | (945 262 0162) | 10 | HEYKEL KOZA DİŞLİ PULU | THRUST WASHER | | | ♦ | ♦ | ♦ | ♦ | ♦ | ♦ | ♦ | ♦ |
| | | | (389 262 1462) | | | | | | | | | | | | | |
| 10 | K21.03418 | 000914 006109 | | 5 | HEYKEL KOZA DİŞLİ VİDASI | THREADED PIN | M6X14 | | ♦ | ♦ | ♦ | ♦ | ♦ | ♦ | ♦ | ♦ |
| 11 | K21.03663 | | | Kit | HEYKEL BİLYA VE PUL TAKIMI | WASHER KIT | | (A) | ♦ | ♦ | ♦ | ♦ | ♦ | ♦ | ♦ | ♦ |
| 12 | K21.03180 | 946 260 3561 | (946 260 3661) | 1 | ŞANZIMAN HEYKELİ (BOŞ) | PLANETARY CARRIER (EMPTY) | | (A)(3) | ♦ | ♦ | ♦ | ♦ | ♦ | ♦ | ♦ | ♦ |
| | | | (945 260 4561) | | | | | | | | | | | | | |
| | | | (945 260 4461) | | | | | | | | | | | | | |
| 12 | K21.03182 | 389 260 8761 | (389 260 8661) | 1 | ŞANZIMAN HEYKELİ (BOŞ) | PLANETARY CARRIER (EMPTY) | | (A)(B)(4) | ♦ | ♦ | ♦ | ♦ | ♦ | | | |
| | | | (389 260 4661) | | | | | | | | | | | | | |
| | | | (389 260 5261) | | | | | | | | | | | | | |
| 13 | K21.06313 | 945 260 4661 | | Kit | ŞANZIMAN HEYKELİ (DOLU) | PLANETARY CARRIER (FULL) | | (A)(3) | ♦ | ♦ | ♦ | ♦ | ♦ | ♦ | ♦ | ♦ |
| 13 | K21.03683 | | | Kit | ŞANZIMAN HEYKELİ (DOLU) | PLANETARY CARRIER (FULL) | | (A)(B)(4) | ♦ | ♦ | ♦ | ♦ | ♦ | | | |
| 14 | K21.06864 | 000472 130000 | | 1 | ÇEMBER DİŞLİ BİLYA SEKMANI | RETAINING RING | 130X4mm | | ♦ | ♦ | ♦ | ♦ | ♦ | ♦ | ♦ | ♦ |
| 15 | K21.03614 | 008 981 1325 | (004 981 8725) | 1 | ÇEMBER DİŞLİ BİLYASI | ROLLER BEARING | 90X130X14mm | | ♦ | ♦ | ♦ | ♦ | ♦ | ♦ | ♦ | ♦ |
| | | | (004 981 8825) | | | | | | | | | | | | | |
| | | | (004 981 9425) | | | | | | | | | | | | | |
| 16 | K21.03438 | 945 262 0108 | (389 262 0808) | 1 | ÇEMBER DİŞLİ 85 DİŞ | RING WHEEL 85 T. | | (A) | ♦ | ♦ | ♦ | ♦ | ♦ | ♦ | ♦ | ♦ |
| 16 | | 389 262 0608 | | 1 | ÇEMBER DİŞLİ 85 DİŞ | RING WHEEL 85 T. | | (B) | ♦ | ♦ | ♦ | ♦ | ♦ | | | |
| 17 | K21.03440 | 945 262 0208 | | 1 | ÇEMBER DİŞLİ 85 DİŞ | RING WHEEL 85 T. | | (A) | ♦ | ♦ | ♦ | ♦ | ♦ | ♦ | ♦ | ♦ |
| 17 | K21.03449 | 945 262 1208 | (945 262 0808) | 1 | ÇEMBER DİŞLİ 85 DİŞ | RING WHEEL 85 T. | | (A) | | | | | | ♦ | | |
| 17 | K21.03441 | 389 262 0708 | | 1 | ÇEMBER DİŞLİ 85 DİŞ | RING WHEEL 85 T. | | (B) | ♦ | ♦ | ♦ | ♦ | ♦ | | | |
| 18 | K21.04253 | 389 262 0773 | | 1 | ÇEMBER DİŞLİ SEKMANI | LOCK RING | | | ♦ | ♦ | ♦ | ♦ | ♦ | ♦ | ♦ | ♦ |
| 19 | K21.03442 | 930 262 0125 | (389 262 1425) | 1 | PLANET ÇAN DİŞLİ 85 DİŞ | CARRIER HUB 85 T. | | | ♦ | ♦ | ♦ | ♦ | ♦ | ♦ | ♦ | ♦ |
| 20 | K21.04076 | 389 262 0251 | | 1 | ŞANZIMAN HEYKELİ ARA PULU | SPACER RING | | | ♦ | ♦ | ♦ | ♦ | ♦ | ♦ | ♦ | ♦ |
| 21 | K21.03018 | 389 260 2036 | | 1 | TABLA SENKROMENÇ | FOLLOWER RING | | (1) | ♦ | ♦ | ♦ | ♦ | ♦ | ♦ | ♦ | ♦ |
| 21 | K21.03037 | 947 260 3036 | (947 260 0836) | 1 | TABLA SENKROMENÇ | FOLLOWER RING | | (2) | | | | | | ♦ | ♦ | ♦ |
| 22 | K21.03017 | 389 262 0537 | (389 262 0037) | 2 | AĞIR SERİ FRENLEME (Mo) | SYNCHRONIZING CONE / Mo | | (1) | ♦ | ♦ | ♦ | ♦ | ♦ | ♦ | ♦ | ♦ |
| | | | (389 262 0137) | | | | | | | | | | | | | |
| | | | (389 262 3337) | | | | | | | | | | | | | |
| 22 | K21.03078 | 945 260 0850 | | 2 | AĞIR SERİ FRENLEME (C) | SYNCHRONIZING CONE / C | | (1) | ♦ | ♦ | ♦ | ♦ | ♦ | ♦ | ♦ | ♦ |
| 22 | K21.03185 | 947 260 0945 | | 2 | AĞIR SERİ FRENLEME (Mo) | SYNCHRONIZING CONE / Mo | | (2) | | | | | | ♦ | ♦ | ♦ |
| 22 | K21.06273 | 947 260 3045 | | 2 | AĞIR SERİ FRENLEME (C) | SYNCHRONIZING CONE / C | | (2) | | | | | | ♦ | ♦ | ♦ |
| 23 | K21.03077 | 389 262 0293 | | 2 | FRENLEME TELİ | SPRING | | | ♦ | ♦ | ♦ | ♦ | ♦ | ♦ | ♦ | ♦ |
| 24 | K21.03079 | 389 262 4935 | (389 262 2035) | 1 | AĞIR SERİ YILDIZ DİŞLİ 73 DİŞ | SYNCHRONIZER HUB 73 T. | | | ♦ | ♦ | ♦ | ♦ | ♦ | ♦ | ♦ | ♦ |
| | | | (400 262 0335) | | | | | | | | | | | | | |
| 25 | K21.04356 | 000471 120000 | | 1 | AĞIR SERİ YILDIZ DİŞLİ SEKMANI | RETAINING RING | | | ♦ | ♦ | ♦ | ♦ | ♦ | ♦ | ♦ | ♦ |
| 26 | K21.03028 | 945 262 6623 | (945 262 0823) | 1 | AĞIR SERİ HALKA 73 DİŞ | ENGAGING SLEEVE 73 T. | | (1) | ♦ | ♦ | ♦ | ♦ | ♦ | ♦ | ♦ | ♦ |
| | | | (389 262 1623) | | | | | | | | | | | | | |
| | | | (389 262 3823) | | | | | | | | | | | | | |
| | | | (945 262 2623) | | | | | | | | | | | | | |
| 26 | K21.03033 | 945 262 6923 | (930 262 0623) | 1 | AĞIR SERİ HALKA | ENGAGING SLEEVE | | (2) | | | | | | ♦ | ♦ | ♦ |

NOTES :
Parts encoded alphabetic and numaric are used together.

GEARBOX TYPE:
715240 - G210 - 16 / 14,2 - 0,83 EPS
715241 - 715242 -715252 - 715253 - G210 - 16 / 14,02 - 0,83
715500 - 715501- 715504 - G210 - 16 / 14,02 - 0,83

NOTLAR :
Alfabetik ve rakam ile kodlanan parçalar birlikte kullanılır.

ŞANZIMAN TİPLERİ:
715240 - G210 - 16 / 14,2 - 0,83 EPS
715241 - 715242 -715252 - 715253 - G210 - 16 / 14,02 - 0,83
715500 - 715501- 715504 - G210 - 16 / 14,02 - 0,83





Original parts names, oem numbers, symbols and descriptions used in this catalogue are for reference purposes only.

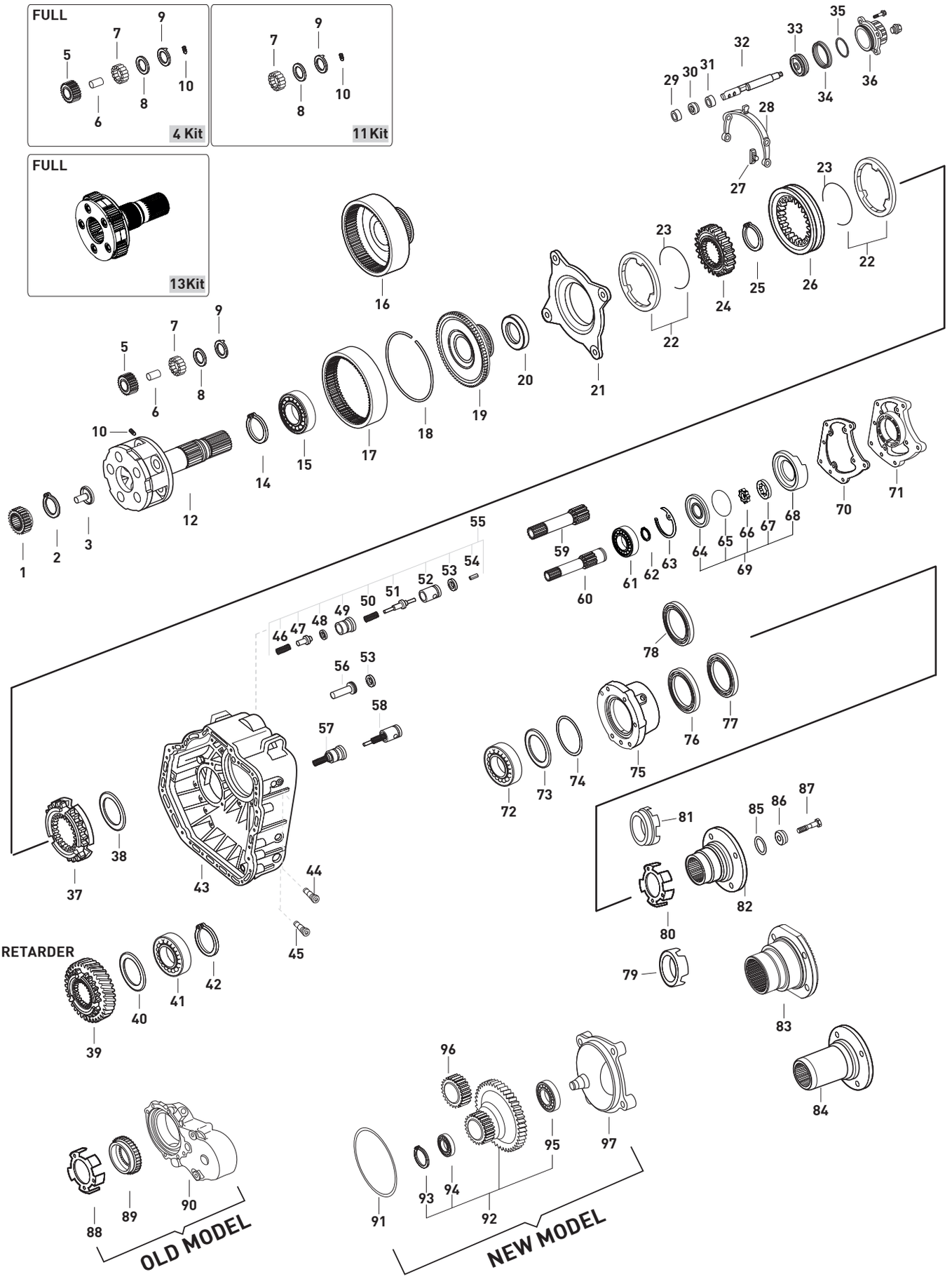






Original parts names, oem numbers, symbols and descriptions used in this catalogue are for reference purposes only.

| Fig. | Kacmaz No | Oem No | Oem Old No | Pcs. | Ürün Tanımı | Description | Sizes | Not | 715240 | 715241 | 715242 | 715252 | 715253 | 715500 | 715501 | 715504 |
|---|---|---|---|---|---|---|---|---|---|---|---|---|---|---|---|---|
| 27 | K21.03406 | 389 265 2449 | (945 265 0349) | 2 | AĞIR SERİ HİLAL PABUCU | SLIDING PAD | | (1) | ♦ | ♦ | ♦ | ♦ | ♦ | ♦ | ♦ | ♦ |
| | | | (387 265 0049) | | | | | | | | | | | | | |
| | | | (389 265 0949) | | | | | | | | | | | | | |
| | | | (389 265 1249) | | | | | | | | | | | | | |
| 27 | K21.03431 | 960 265 0049 | (947 265 0349) | 2 | AĞIR SERİ HİLAL PABUCU | SLIDING PAD | | (2) | | | | | | ♦ | ♦ | ♦ |
| | | | (389 265 2749) | | | | | | | | | | | | | |
| 28 | K21.06411 | 947 265 1701 | (389 265 0901) | 1 | AĞIR SERİ HİLALİ | SHIFTING FORK | | (1) | ♦ | ♦ | ♦ | ♦ | ♦ | ♦ | ♦ | ♦ |
| | | | (930 265 0001) | | | | | | | | | | | | | |
| | | | (947 265 0801) | | | | | | | | | | | | | |
| 28 | K21.06324 | 947 265 1901 | (947 265 0901) | 1 | AĞIR SERİ HİLALİ | SHIFTING FORK | | (2) | | | | | | ♦ | ♦ | ♦ |
| 29 | K21.04254 | 000 992 7703 | (389 267 2250) | 1 | AĞIR SERİ HİLAL MİL BURCU | BUSHING | 21X25X20mm | | ♦ | ♦ | ♦ | ♦ | ♦ | ♦ | ♦ | ♦ |
| 30 | K21.03523 | 000 267 0197 | (000 267 0397) | 1 | AĞIR SERİ HİLAL MİL KEÇESİ | OIL SEAL | 22X32X8mm | | ♦ | ♦ | ♦ | ♦ | ♦ | ♦ | ♦ | ♦ |
| 31 | K21.04178 | 387 267 0650 | (387 267 0250) | 1 | AĞIR SERİ HİLAL MİL BURCU | BUSHING | 34X22X8mm | | ♦ | ♦ | ♦ | ♦ | ♦ | ♦ | ♦ | ♦ |
| 32 | | 389 267 3417 | | 1 | AĞIR SERİ HİLAL MİLİ | SHIFTING ROD | | EPS | ♦ | | | ♦ | | | | |
| 32 | | 389 267 7217 | (389 267 3917) | 1 | AĞIR SERİ HİLAL MİLİ | SHIFTING ROD | | MPS | | ♦ | ♦ | | ♦ | | | |
| 32 | | 389 267 3517 | | 1 | AĞIR SERİ HİLAL MİLİ | SHIFTING ROD | | | | | | | | ♦ | ♦ | ♦ |
| 33 | K21.06975 | 960 267 0818 | (389 267 1018) | 1 | AĞIR SERİ HİLAL MİL PİSTONU | PISTON | | | ♦ | ♦ | ♦ | ♦ | ♦ | ♦ | ♦ | ♦ |
| | | | (389 267 0118) | | | | | | | | | | | | | |
| 34 | K21.03525 | 024 997 8347 | (020 997 6747) | 1 | AĞIR SERİ SİLİNDİR KEÇESİ | SEAL RING | 77X90X17mm | | ♦ | ♦ | ♦ | ♦ | ♦ | ♦ | ♦ | ♦ |
| | | | (014 997 3647) | | | | | | | | | | | | | |
| | | | (014 997 5147) | | | | | | | | | | | | | |
| 35 | K21.06399 | 013 997 7548 | | 1 | AĞIR SERİ SİLİNDİR ORİNGİ | O-RING | 89,5X3mm | | ♦ | ♦ | ♦ | ♦ | ♦ | ♦ | ♦ | ♦ |
| 36 | K21.03540 | 945 267 1119 | (389 267 1319) | 1 | AĞIR SERİ SİLİNDİRİ | SHIFTING CYLINDER | | | ♦ | ♦ | ♦ | ♦ | ♦ | ♦ | ♦ | ♦ |
| | | | (389 267 4219) | | | | | | | | | | | | | |
| | | | (945 267 1319) | | | | | | | | | | | | | |
| | | | (945 267 1619) | | | | | | | | | | | | | |
| 37 | K21.03021 | 389 262 4434 | | 1 | SERİ SENKROMENÇ | ENGAGING RING | | (1) | ♦ | ♦ | ♦ | ♦ | ♦ | | | |
| 37 | K21.03187 | 389 262 9234 | (945 262 1234) | 1 | SERİ SENKROMENÇ | ENGAGING RING | | (1) | ♦ | ♦ | ♦ | ♦ | ♦ | ♦ | ♦ | ♦ |
| 37 | K21.03186 | 945 262 3834 | | 1 | SERİ SENKROMENÇ | ENGAGING RING | | (2) | | | | | | ♦ | ♦ | ♦ |
| 38 | | 389 262 7854 | | 1 | ŞANZIMAN HEYKEL BİLYA PULU | WASHER | 3.50mm | | ♦ | ♦ | ♦ | ♦ | ♦ | | | |
| 39 | K21.06050 | 945 264 0130 | (389 264 0730) | 1 | RETARDER DİŞLİSİ 63 DİŞ | RETARDER GEAR 63 T. | | (1) | | | | | | ♦ | ♦ | |
| 39 | K21.03188 | 930 264 0320 | | 1 | RETARDER DİŞLİSİ 64 DİŞ | RETARDER GEAR 64 T. | | (2) | | | | | | ♦ | | |
| 39 | | 945 264 0520 | | 1 | RETARDER DİŞLİSİ 63 DİŞ | RETARDER GEAR 63 T. | | (2) | | | | | | ♦ | ♦ | |
| 40 | | 387 264 0064 | | 1 | YAĞ TOPLAMA SACI | OIL BAFFLE | | | | | | | | ♦ | ♦ | |
| 41 | | 007 981 8201 | (007 981 8701) | 1 | ŞANZIMAN HEYKEL BİLYASI | BEARING | 103X140X26mm | | | | | | | ♦ | ♦ | |
| 42 | | 000472 140000 | | 1 | HEYKEL BİLYA SEKMANI | LOCK RING | 140X4mm | | | | | | | ♦ | ♦ | |
| 43 | | 945 261 5003 | | 1 | ŞANZIMAN ARKA GÖVDE | HOUSING | | | ♦ | ♦ | ♦ | ♦ | ♦ | | | |
| 43 | | 945 260 6812 | (945 261 4526) | 1 | ŞANZIMAN ARKA GÖVDE | HOUSING | | | | | | | | ♦ | ♦ | ♦ |
| 43 | | 930 260 5911 | (930 260 2311) | 1 | ŞANZIMAN ARKA GÖVDE | HOUSING | | | | | | | | ♦ | | |
| | | | (930 261 1303) | | | | | | | | | | | | | |
| 43 | | 930 260 6011 | (930 260 1511) | 1 | ŞANZIMAN ARKA GÖVDE | HOUSING | | | | | | | | ♦ | | |
| | | | (930 260 2411) | | | | | | | | | | | | | |
| 43 | | 945 260 6912 | (945 261 4326) | 1 | ŞANZIMAN ARKA GÖVDE | HOUSING | | | | | | | | ♦ | | |
| 44 | K21.06026 | 945 265 3074 | (945 265 1474) | 2 | HİLAL CİVATASI | PIN | | | ♦ | ♦ | ♦ | ♦ | ♦ | | | |
| | | | (945 265 1774) | | | | | | | | | | | | | |
| | | | (945 265 2674) | | | | | | | | | | | | | |
| 45 | K21.04307 | 960 265 0774 | (945 265 1274) | 2 | HİLAL CİVATASI | PIN | | | | | | | | ♦ | ♦ | ♦ |
| | | | (945 265 2974) | | | | | | | | | | | | | |
| | | | (945 265 2774) | | | | | | | | | | | | | |
| 46 | | 389 993 5301 | | 1 | YAĞ BASINÇ YAYI | SPRING | | | ♦ | ♦ | ♦ | ♦ | ♦ | ♦ | ♦ | ♦ |
| 47 | | 389 269 1026 | (389 269 0926) | 1 | YAĞ BASINÇ VALFİ | SELECTOR VALVE | | | ♦ | ♦ | ♦ | ♦ | ♦ | ♦ | ♦ | ♦ |
| 48 | K21.04210 | 013 997 0148 | (020 997 8348) | 1 | YAĞ BASINÇ ORİNGİ | O-RING | 13,3X2,4mm | | ♦ | ♦ | ♦ | ♦ | ♦ | ♦ | ♦ | ♦ |
| 49 | | 389 269 1444 | (389 269 0744) | 1 | YAĞ BASINÇ VALF GÖVDESİ | VALVE INSERT | | | ♦ | ♦ | ♦ | ♦ | ♦ | ♦ | ♦ | ♦ |

NOTES :
Parts encoded alphabetic and numaric are used together.

GEARBOX TYPE:
715240 - G210 - 16 / 14,2 - 0,83 EPS
715241 - 715242 -715252 - 715253 - G210 - 16 / 14,02 - 0,83
715500 - 715501- 715504 - G210 - 16 / 14,02 - 0,83

NOTLAR :
Alfabetik ve rakam ile kodlanan parçalar birlikte kullanılır.

ŞANZIMAN TİPLERİ:
715240 - G210 - 16 / 14,2 - 0,83 EPS
715241 - 715242 -715252 - 715253 - G210 - 16 / 14,02 - 0,83
715500 - 715501- 715504 - G210 - 16 / 14,02 - 0,83





Original parts names, oem numbers, symbols and descriptions used in this catalogue are for reference purposes only.

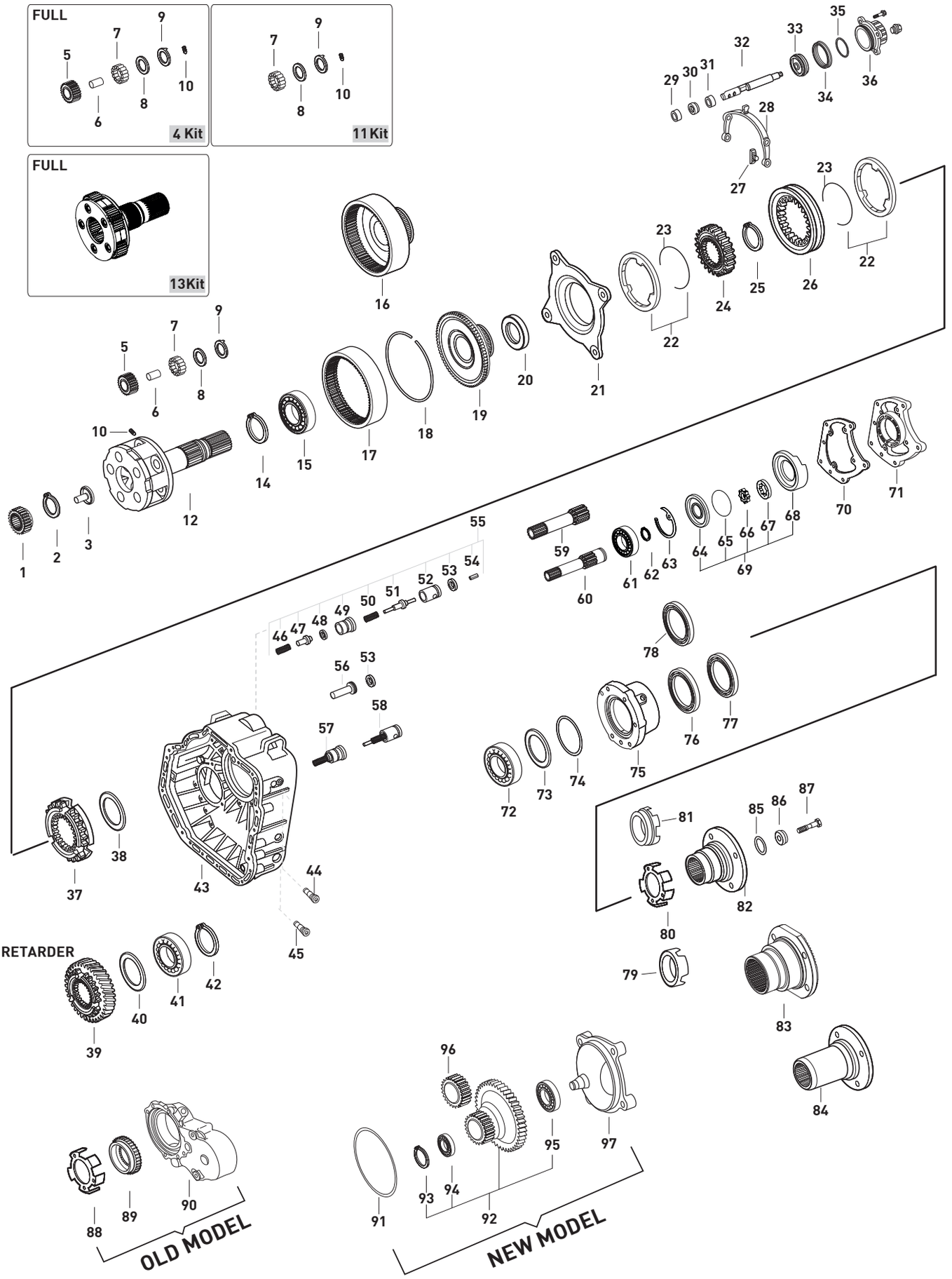






Original parts names, oem numbers, symbols and descriptions used in this catalogue are for reference purposes only.

| Fig. | Kacmaz No | Oem No | Oem Old No | Pcs. | Ürün Tanımı | Description | Sizes | Not | 715240 | 715241 | 715242 | 715252 | 715253 | 715500 | 715501 | 715504 |
|---|---|---|---|---|---|---|---|---|---|---|---|---|---|---|---|---|
| 50 | | 389 993 4401 | | 1 | YAĞ BASINÇ VALF MİL YAYI | SPRING | 11,5X41,9X1mm | | ♦ | ♦ | ♦ | ♦ | ♦ | ♦ | ♦ | ♦ |
| 51 | | 389 269 0826 | | 1 | YAĞ BASINÇ VALF MİLİ | SELECTOR VALVE | | | ♦ | ♦ | ♦ | ♦ | ♦ | ♦ | ♦ | ♦ |
| 52 | | 389 269 0844 | | 1 | YAĞ BASINÇ VALF TOPU | BALL | | | ♦ | ♦ | ♦ | ♦ | ♦ | ♦ | ♦ | ♦ |
| 53 | K21.04212 | 013 997 0048 | (020 997 8248) | 1 | YAĞ BASINÇ VALF ORİNGİ | O-RING | 19,2X3mm | | ♦ | ♦ | ♦ | ♦ | ♦ | ♦ | ♦ | ♦ |
| 54 | | 001481 004049 | (001481 004001) | 1 | EMNİYET PİMİ | CLAMPING SLEEVE | | | ♦ | ♦ | ♦ | ♦ | ♦ | ♦ | ♦ | ♦ |
| 55 | K21.06962 | 655 260 0157 | | Kit | YAĞ BASINÇ VALFİ KOMPLE | VALVE KIT | | | ♦ | ♦ | ♦ | ♦ | ♦ | ♦ | ♦ | ♦ |
| 56 | K21.06979 | 389 265 0176 | (389 265 0076) | 1 | YAĞ BASINÇ VALFİ ALIN FİBERİ | WASHER | | | ♦ | ♦ | ♦ | ♦ | ♦ | ♦ | ♦ | ♦ |
| 57 | K21.06953 | 960 260 1057 | | Kit | YAĞ BASINÇ VALFİ KOMPLE | VALVE KIT | | | ♦ | ♦ | ♦ | ♦ | ♦ | ♦ | ♦ | ♦ |
| 58 | K21.06973 | 960 260 1257 | | Kit | YAĞ BASINÇ VALFİ KOMPLE | VALVE KIT | | | ♦ | ♦ | ♦ | ♦ | ♦ | ♦ | ♦ | ♦ |
| 59 | K21.03670 | 947 264 0105 | | 1 | YAĞ POMPA MİLİ (RETARDER) | OIL PUMP SHAFT | | (5) | | | | | | ♦ | | |
| 59 | K21.03085 | 947 264 0005 | (389 269 0310) | 1 | YAĞ POMPA MİLİ | OIL PUMP SHAFT | | (5) | ♦ | ♦ | ♦ | ♦ | ♦ | ♦ | ♦ | |
| | | | (389 269 1210) | | | | | | | | | | | | | |
| 60 | K21.03198 | 947 269 1010 | (945 269 1010) | 1 | YAĞ POMPA MİLİ | OIL PUMP SHAFT | | (6) | | | | | | ♦ | ♦ | ♦ |
| 60 | K21.06298 | 947 269 1110 | (945 269 1110) | 1 | YAĞ POMPA MİLİ | OIL PUMP SHAFT | | (6) | | | | | | ♦ | ♦ | |
| 61 | K21.03613 | 004 981 9225 | (004 981 8625) | 1 | PTO MİL BİLYASI | ROLLER BEARING | 45X75X16mm | (5) | ♦ | ♦ | ♦ | ♦ | ♦ | ♦ | ♦ | |
| | | | (004 981 9025) | | | | | | | | | | | | | |
| 61 | K21.03648 | 010 981 9025 | (010 981 8425) | 1 | PTO MİL BİLYASI | ROLLER BEARING | 17X35X10mm | (6) | | | | | | ♦ | ♦ | ♦ |
| | | | (008 981 5425) | | | | | | | | | | | | | |
| 62 | K21.06964 | 000471 045000 | (003 994 3741) | 1 | PTO MİL BİLYA SEKMANI | RETAINING RING | 1,75mm | (5) | ♦ | ♦ | ♦ | ♦ | ♦ | ♦ | ♦ | |
| 62 | | 912009 045100 | | 1 | PTO MİL BİLYA SEKMANI | RETAINING RING | | (6) | | | | | | ♦ | ♦ | ♦ |
| 63 | K21.94304 | | | 1 | YAĞ POMPA PULU | SPACER WASHER | 0,70mm | | ♦ | ♦ | ♦ | ♦ | ♦ | ♦ | ♦ | ♦ |
| 63 | K21.04304 | 389 262 6254 | | 1 | YAĞ POMPA PULU | SPACER WASHER | 0,80mm | | ♦ | ♦ | ♦ | ♦ | ♦ | ♦ | ♦ | ♦ |
| 63 | K21.04303 | 389 262 5954 | | 1 | YAĞ POMPA PULU | SPACER WASHER | 0,90mm | | ♦ | ♦ | ♦ | ♦ | ♦ | ♦ | ♦ | ♦ |
| 63 | K21.04302 | 389 262 5754 | | 1 | YAĞ POMPA PULU | SPACER WASHER | 1,00mm | | ♦ | ♦ | ♦ | ♦ | ♦ | ♦ | ♦ | ♦ |
| 63 | K21.04301 | 389 262 5554 | | 1 | YAĞ POMPA PULU | SPACER WASHER | 1,10mm | | ♦ | ♦ | ♦ | ♦ | ♦ | ♦ | ♦ | ♦ |
| 63 | K21.04305 | 389 262 5354 | | 1 | YAĞ POMPA PULU | SPACER WASHER | 1,20mm | | ♦ | ♦ | ♦ | ♦ | ♦ | ♦ | ♦ | ♦ |
| 64 | K21.03558 | 947 264 0287 | | 1 | YAĞ POMPA KAPAĞI | OIL PUMP COVER | | PTO | | | | | | ♦ | | |
| 64 | K21.03412 | 945 269 0201 | (389 269 2501) | 1 | YAĞ POMPA KAPAĞI | OIL PUMP COVER | | | ♦ | ♦ | ♦ | ♦ | ♦ | ♦ | ♦ | ♦ |
| 65 | K21.03511 | 029 997 5748 | | 1 | YAĞ POMPA KAPAK ORİNGİ | O-RING | 112X2,5mm | | ♦ | ♦ | ♦ | ♦ | ♦ | ♦ | ♦ | ♦ |
| 66 | K21.03413 | 389 269 1406 | (389 269 1506) | 1 | YAĞ POMPA İÇ ROTOR | OIL PUMP GEAR | | | ♦ | ♦ | ♦ | ♦ | ♦ | ♦ | ♦ | ♦ |
| | | | (945 260 0090) | | | | | | | | | | | | | |
| 67 | K21.03414 | 389 269 0706 | (389 269 1206) | 1 | YAĞ POMPA DIŞ ROTOR | ROTOR | | | ♦ | ♦ | ♦ | ♦ | ♦ | ♦ | ♦ | ♦ |
| 68 | K21.03478 | 947 269 1001 | | 1 | YAĞ POMPA GÖVDESİ | OIL PUMP HOUSING | | (M) | | | | | | ♦ | ♦ | ♦ |
| 68 | K21.03415 | 389 269 3801 | | 1 | YAĞ POMPA GÖVDESİ | OIL PUMP HOUSING | | (N) | ♦ | ♦ | ♦ | ♦ | ♦ | ♦ | ♦ | ♦ |
| 69 | K21.03475 | 389 260 0790 | | 1 | YAĞ POMPASI | OIL PUMP | | (M) | | | | | | ♦ | ♦ | ♦ |
| 69 | K21.03411 | 389 260 0690 | (389 260 0590) | 1 | YAĞ POMPASI | OIL PUMP | | (N) | ♦ | ♦ | ♦ | ♦ | ♦ | ♦ | ♦ | ♦ |
| 70 | K21.06587 | 389 261 1980 | (389 261 1480) | 1 | PTO KAPAK CONTASI | GASKET | | | ♦ | ♦ | ♦ | ♦ | ♦ | | | |
| 70 | K21.03667 | 945 261 0680 | (945 261 0580) | 1 | PTO KAPAK CONTASI | GASKET | | | ♦ | ♦ | ♦ | ♦ | ♦ | | | |
| | | | (945 261 0080) | | | | | | | | | | | | | |
| 70 | K21.04306 | 945 261 0280 | | 1 | PTO KAPAK CONTASI | GASKET | | | | | | | | ♦ | ♦ | ♦ |
| 71 | K21.06260 | 389 261 2433 | (389 261 2333) | 1 | PTO KAPAĞI | COVER | | | ♦ | ♦ | ♦ | ♦ | ♦ | | | |
| | | | (389 261 0933) | | | | | | | | | | | | | |
| 71 | K21.03566 | 945 261 1033 | (945 261 1433) | 1 | PTO KAPAĞI | COVER | | | ♦ | ♦ | ♦ | ♦ | ♦ | ♦ | ♦ | ♦ |
| | | | (400 261 1133) | | | | | | | | | | | | | |
| 72 | K21.03617 | 004 981 9325 | (004 981 8925) | 1 | ŞANZIMAN ARKA BİLYA | ROLLER BEARING | 85X150X28mm | (4)(7) | ♦ | ♦ | ♦ | ♦ | ♦ | | | |
| | | | (004 981 8525) | | | | | | | | | | | | | |
| 72 | K21.03625 | 008 981 3025 | (008 981 5225) | 1 | ŞANZIMAN ARKA BİLYA | ROLLER BEARING | 80X150X28mm | (3)(8)(9) | ♦ | ♦ | ♦ | ♦ | ♦ | ♦ | ♦ | ♦ |
| | | | (007 981 3325) | | | | | | | | | | | | | |
| 73 | K21.04081 | 389 262 7754 | | 1 | ŞANZIMAN HEYKEL AYAR PULU | THRUST WASHER | 1,40mm | | ♦ | ♦ | ♦ | ♦ | ♦ | ♦ | ♦ | ♦ |
| 73 | K21.04139 | 389 262 5152 | | 1 | ŞANZIMAN HEYKEL AYAR PULU | THRUST WASHER | 0,80mm | | ♦ | ♦ | ♦ | ♦ | ♦ | ♦ | ♦ | ♦ |
| 73 | K21.04080 | 389 262 5052 | | 1 | ŞANZIMAN HEYKEL AYAR PULU | THRUST WASHER | 0,40mm | | ♦ | ♦ | ♦ | ♦ | ♦ | ♦ | ♦ | ♦ |
| 73 | K21.04079 | 389 262 7654 | | 1 | ŞANZIMAN HEYKEL AYAR PULU | THRUST WASHER | 0,25mm | | ♦ | ♦ | ♦ | ♦ | ♦ | ♦ | ♦ | ♦ |
| 73 | K21.04140 | 389 262 4952 | | 1 | ŞANZIMAN HEYKEL AYAR PULU | THRUST WASHER | 0,20mm | | ♦ | ♦ | ♦ | ♦ | ♦ | ♦ | ♦ | ♦ |

NOTES :
Parts encoded alphabetic and numaric are used together.

GEARBOX TYPE:
715240 - G210 - 16 / 14,2 - 0,83 EPS
715241 - 715242 -715252 - 715253 - G210 - 16 / 14,02 - 0,83
715500 - 715501- 715504 - G210 - 16 / 14,02 - 0,83

NOTLAR :
Alfabetik ve rakam ile kodlanan parçalar birlikte kullanılır.

ŞANZIMAN TİPLERİ:
715240 - G210 - 16 / 14,2 - 0,83 EPS
715241 - 715242 -715252 - 715253 - G210 - 16 / 14,02 - 0,83
715500 - 715501- 715504 - G210 - 16 / 14,02 - 0,83





Original parts names, oem numbers, symbols and descriptions used in this catalogue are for reference purposes only.

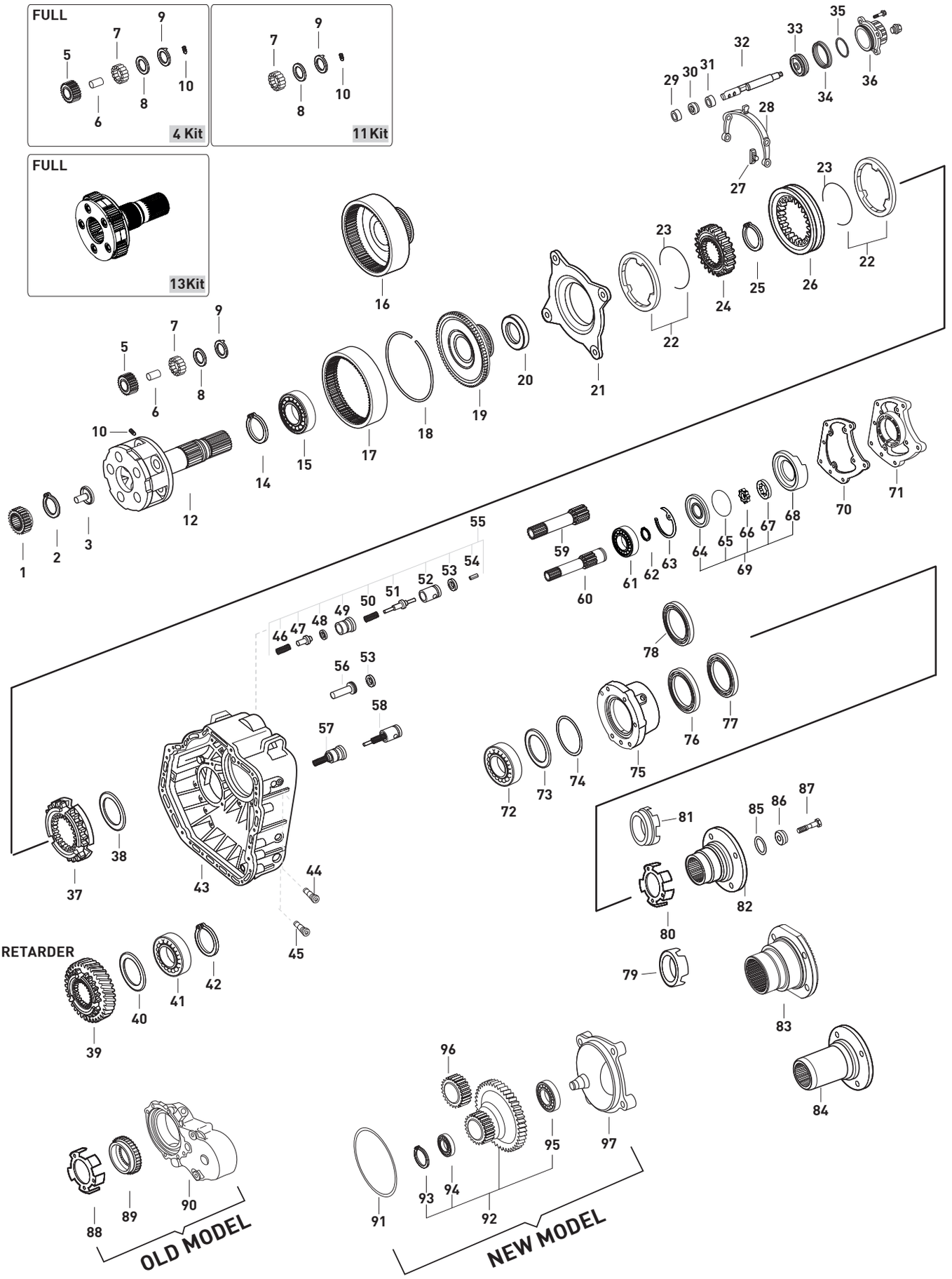






Original parts names, oem numbers, symbols and descriptions used in this catalogue are for reference purposes only.

| Fig. | Kacmaz No | Oem No | Oem Old No | Pcs. | Ürün Tanımı | Description | Sizes | Not | 715240 | 715241 | 715242 | 715252 | 715253 | 715500 | 715501 | 715504 |
|---|---|---|---|---|---|---|---|---|---|---|---|---|---|---|---|---|
| 73 | K21.04141 | 389 262 4852 | | 1 | ŞANZIMAN HEYKEL AYAR PULU | THRUST WASHER | 0,15mm | | ♦ | ♦ | ♦ | ♦ | ♦ | ♦ | ♦ | ♦ |
| 73 | K21.04078 | 389 262 4752 | | 1 | ŞANZIMAN HEYKEL AYAR PULU | THRUST WASHER | 0,10mm | | ♦ | ♦ | ♦ | ♦ | ♦ | ♦ | ♦ | ♦ |
| 74 | K21.06713 | 015 997 2848 | (020 997 8548) | 1 | ŞANZIMAN ARKA KAPAK ORİNGİ | O-RING | 149,5X3mm | | ♦ | ♦ | ♦ | ♦ | ♦ | ♦ | ♦ | ♦ |
| 75 | K21.06237 | 389 261 0420 | (389 261 0520) | 1 | ŞANZIMAN ARKA KAPAK | COVER | | OLD | ♦ | ♦ | ♦ | ♦ | ♦ | ♦ | ♦ | ♦ |
| 75 | K21.06238 | 389 261 1920 | (389 261 2020) | 1 | ŞANZIMAN ARKA KAPAK | COVER | | NEW | ♦ | ♦ | ♦ | ♦ | ♦ | ♦ | ♦ | ♦ |
| 75 | K21.06239 | 930 261 0420 | (930 261 0520) | 1 | ŞANZIMAN ARKA KAPAK | COVER | | RETARDER | | | | | | ♦ | ♦ | ♦ |
| | | | (389 261 1820) | | | | | | | | | | | | | |
| 76 | K21.03507 | 013 997 7347 | (015 997 4247) | 1 | ŞANZIMAN ARKA KEÇE | OIL SEAL | 95X115X13/12mm | | ♦ | ♦ | ♦ | ♦ | ♦ | ♦ | ♦ | ♦ |
| | | | (013 997 5647) | | | | | | | | | | | | | |
| 77 | K21.03528 | 013 997 7247 | (014 997 1947) | 1 | ŞANZIMAN ARKA KEÇE | OIL SEAL | 95X115X13mm | | ♦ | ♦ | ♦ | ♦ | ♦ | ♦ | ♦ | ♦ |
| | | | (013 997 5547) | | | | | | | | | | | | | |
| 78 | K21.03512 | 015 997 7846 | (023 997 1647) | 1 | ŞANZIMAN ARKA KEÇE | OIL SEAL | 95X115X15,5mm | | ♦ | ♦ | ♦ | ♦ | ♦ | ♦ | ♦ | ♦ |
| 79 | | 945 262 0528 | | 1 | ŞANZIMAN KM DEVİR SACI | PULSE STAR | | (7) | ♦ | ♦ | ♦ | ♦ | ♦ | ♦ | ♦ | |
| 80 | K21.04134 | 930 262 0028 | | 1 | ŞANZIMAN KM DEVİR SACI | PULSE STAR | | (8)(10)(11) | | | | | | ♦ | ♦ | ♦ |
| 80 | | 945 262 0228 | | 1 | ŞANZIMAN KM DEVİR SACI | PULSE STAR | | (9) | ♦ | ♦ | ♦ | ♦ | ♦ | ♦ | ♦ | |
| 81 | | 945 262 0628 | (389 260 0350) | 1 | ŞANZIMAN KM DEVİR SACI | PULSE STAR | | (8) | ♦ | ♦ | ♦ | ♦ | ♦ | ♦ | ♦ | |
| 82 | K21.03084 | 389 262 0445 | | 1 | ŞANZIMAN FLANŞI | COMPANION FLANGE | 4-H, Ø180mm | (7) | ♦ | ♦ | ♦ | ♦ | ♦ | ♦ | ♦ | ♦ |
| 82 | K21.03196 | 945 262 0045 | | 1 | ŞANZIMAN FLANŞI | COMPANION FLANGE | 4-H, Ø180mm | (8) | ♦ | ♦ | ♦ | ♦ | ♦ | ♦ | ♦ | ♦ |
| 82 | K21.06052 | 945 262 0245 | | 1 | ŞANZIMAN FLANŞI | COMPANION FLANGE | 4-H, Ø200mm | (9) | | | | | | ♦ | | ♦ |
| 83 | K21.03211 | 930 262 0045 | | 1 | ŞANZIMAN FLANŞI | COMPANION FLANGE | 4-H, Ø180mm | (10) | | | | | | ♦ | | |
| 83 | K21.03443 | 930 262 0245 | | 1 | ŞANZIMAN FLANŞI | COMPANION FLANGE | 4-H, Ø180mm | (11) | | | | | | ♦ | ♦ | |
| 84 | | 945 262 0445 | | 1 | ŞANZIMAN FLANŞI | COMPANION FLANGE | | | | | | | | ♦ | ♦ | |
| 85 | K21.04310 | 014 997 5148 | (020 997 8648) | 1 | ŞANZIMAN FLANŞ ORİNGİ | O-RING | 72,4X5,3mm | | ♦ | ♦ | ♦ | ♦ | ♦ | ♦ | ♦ | ♦ |
| 85 | K21.06978 | 015 997 4348 | | 1 | ŞANZIMAN FLANŞ ORİNGİ | O-RING | 25X3mm | (C) | ♦ | ♦ | ♦ | ♦ | ♦ | ♦ | ♦ | ♦ |
| 86 | K21.04214 | 945 262 0762 | | 1 | ŞANZIMAN FLANŞI ALIN PULU | THRUST WASHER | 93X20mm | (A) | ♦ | ♦ | ♦ | ♦ | ♦ | ♦ | ♦ | ♦ |
| 86 | K21.06977 | 389 262 0362 | (945 262 0062) | 1 | ŞANZIMAN FLANŞI ALIN PULU | THRUST WASHER | 95X24mm | (B) | ♦ | ♦ | ♦ | ♦ | ♦ | ♦ | ♦ | ♦ |
| 86 | K21.06283 | 387 264 1162 | | 1 | ŞANZIMAN FLANŞI ALIN PULU | THRUST WASHER | | (C) | ♦ | ♦ | ♦ | ♦ | ♦ | ♦ | ♦ | ♦ |
| 87 | K21.06280 | 000000 006750 | (000000 005728) | 1 | ŞANZIMAN FLANŞI ALIN VİDASI | SCREW | M20X1,5X80 | (A) | ♦ | ♦ | ♦ | ♦ | ♦ | ♦ | ♦ | ♦ |
| 87 | K21.06028 | 945 990 0019 | (389 990 2019) | 1 | ŞANZIMAN FLANŞI ALIN VİDASI | SCREW | M24X2X85 | (B) | ♦ | ♦ | ♦ | ♦ | ♦ | ♦ | ♦ | ♦ |
| | | | (389 990 0219) | | | | | | | | | | | | | |
| 87 | K21.06281 | 387 990 1719 | | 1 | ŞANZIMAN FLANŞI ALIN VİDASI | SCREW | M24X2X95 | (C) | ♦ | ♦ | ♦ | ♦ | ♦ | ♦ | ♦ | ♦ |
| 88 | K21.04083 | 387 262 0828 | (387 262 0428) | 1 | ŞANZIMAN KM DEVİR SACI | PULSE STAR | | | | | | | | ♦ | ♦ | |
| 89 | | 389 264 0021 | (945 264 0121) | 1 | ŞANZIMAN KM DİŞLİSİ 64 DİŞ | GEAR 64 T | | | | | | | | ♦ | ♦ | |
| 90 | K21.06279 | 389 261 1120 | | 1 | ŞANZIMAN ARKA KAPAK | COVER | | | | | | | | ♦ | ♦ | |
| 91 | | 017 997 9145 | (028 997 8148) | 1 | ŞANZIMAN ARKA KAPAK ORİNGİ | O-RING | | | | | | | | ♦ | ♦ | |
| 92 | K21.06311 | 930 264 0921 | | 1 | DİREKSİYON POMPA DİŞLİSİ | GEAR | | | | | | | | ♦ | | |
| 92 | K21.06312 | 930 264 0821 | | 1 | DİREKSİYON POMPA DİŞLİSİ | GEAR | | | | | | | | ♦ | | |
| 93 | | 000983 020000 | | 1 | DİREK.POMPA DİŞLİ BİLYA SEKMANI | RETAINING RING | | | | | | | | ♦ | | |
| 94 | | 000625 006004 | | 1 | DİREKSİYON POMPA DİŞLİ ÖN BİLYA | ROLLER BEARING | | | | | | | | ♦ | | |
| 95 | | 000625 506007 | | 1 | DİREK.POMPA DİŞLİ ARKA BİLYA | ROLLER BEARING | | | | | | | | ♦ | | |
| 96 | K21.03671 | 930 264 0721 | | 1 | DİREKSİYON POMPA DİŞLİ KARŞILIĞI | GEAR | | | | | | | | ♦ | | |
| 97 | K21.06300 | 930 264 0111 | (930 264 0211) | 1 | DİREKSİYON POMPA KAPAĞI | HOUSING | | | | | | | | ♦ | | |

NOTES :
Parts encoded alphabetic and numaric are used together.

GEARBOX TYPE:
715240 - G210 - 16 / 14,2 - 0,83 EPS
715241 - 715242 -715252 - 715253 - G210 - 16 / 14,02 - 0,83
715500 - 715501- 715504 - G210 - 16 / 14,02 - 0,83

NOTLAR :
Alfabetik ve rakam ile kodlanan parçalar birlikte kullanılır.

ŞANZIMAN TİPLERİ:
715240 - G210 - 16 / 14,2 - 0,83 EPS
715241 - 715242 -715252 - 715253 - G210 - 16 / 14,02 - 0,83
715500 - 715501- 715504 - G210 - 16 / 14,02 - 0,83





Original parts names, oem numbers, symbols and descriptions used in this catalogue are for reference purposes only.

SYNCHRONIZER KIT CONST.
NEW MODEL

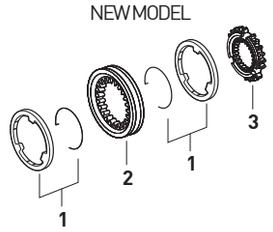


| Fig. | Kacmaz No. | Oem No | Oem Old No | Pcs. | Ürün Tanımı | Description |
|---|---|---|---|---|---|---|
| | K21.06208 | | | Kit | TAK.SENKROMENÇ KİT | SYNCHRONIZER KIT Const |
| 1 | K21.03136 | 945 260 2245 | (946 262 6337) | 2 | TAKVİYE FRENLEME (Mo) | SYNCHRONIZING CONE / Mo |
| 2 | K21.03137 | 945 262 6823 | (945 262 6423) | 1 | TAKVİYE SENK.HALKA | ENGAGING SLEEVE |
| 3 | K21.03147 | 945 262 7734 | (945 262 3634) | 1 | TAKVİYE SENKROMENÇ | ENGAGING RING |

SYNCHRONIZER KIT CONST.
OLD MODEL

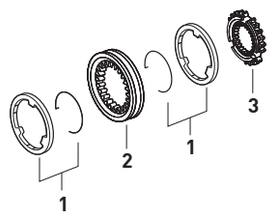


| Fig. | Kacmaz No. | Oem No | Oem Old No | Pcs. | Ürün Tanımı | Description |
|---|---|---|---|---|---|---|
| | K21.06209 | | | Kit | TAK.SENKROMENÇ KİT | SYNCHRONIZER KIT Const |
| 1 | K21.03015 | 389 262 0637 | (387 262 0837) | 2 | TAKVİYE FRENLEME (Mo) | SYNCHRONIZING CONE / Mo |
| 2 | K21.03002 | 945 262 2823 | (945 262 0323) | 1 | TAKVİYE HALKA | ENGAGING SLEEVE |
| | | | (945 262 0623) | | | |
| | | | (389 262 4123) | | | |
| | | | (389 262 2723) | | | |
| 3 | K21.03024 | 389 262 5434 | (945 262 0334) | 1 | TAKVİYE SENKROMENÇ | ENGAGING RING |
| | | | (945 262 0134) | | | |

SYNCHRONIZER KIT 3rd/4th
NEW MODEL

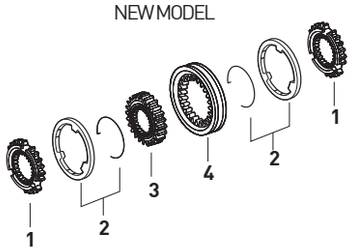


| Fig. | Kacmaz No. | Oem No | Oem Old No | Pcs. | Ürün Tanımı | Description |
|---|---|---|---|---|---|---|
| | K21.06211 | | | Kit | 3./4.VİTES SENK.KİT | SYNCH.KIT 3rd/4th |
| 1 | K21.03146 | 945 262 8234 | (945 262 5434) | 2 | 3./4.VİTES SENKROMENÇ | ENGAGING RING |
| 2 | K21.03148 | 947 260 1945 | (947 260 4645) | 2 | 3./4.VİTES FRENLEME (Mo) | SYNCHRONIZING CONE / Mo |
| | | | (946 262 6137) | | | |
| 3 | K21.03149 | 389 262 4735 | (389 262 4635) | 1 | 3./4.VİTES YILDIZ DİŞLİ | SYNCHRONIZER HUB |
| 4 | K21.03151 | 945 262 6523 | (930 262 0523) | 1 | 3./4.VİTES HALKA | ENGAGING SLEEVE |

SYNCHRONIZER KIT 3rd/4th
NEW MODEL

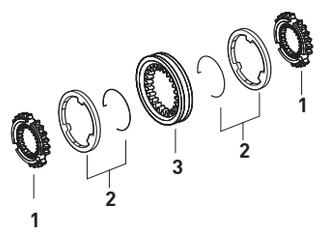


| Fig. | Kacmaz No. | Oem No | Oem Old No | Pcs. | Ürün Tanımı | Description |
|---|---|---|---|---|---|---|
| | K21.06512 | | | Kit | 3./4.VİTES SENK.KİT | SYNCH.KIT 3rd/4th |
| 1 | K21.03146 | 945 262 8234 | (945 262 5434) | 2 | 3./4.VİTES SENKROMENÇ | ENGAGING RING |
| 2 | K21.03148 | 947 260 1945 | (947 260 4645) | 2 | 3./4.VİTES FRENLEME (Mo) | SYNCHRONIZING CONE / Mo |
| | | | (946 262 6137) | | | |
| 3 | K21.03151 | 945 262 6523 | (930 262 0523) | 1 | 3./4.VİTES HALKA | ENGAGING SLEEVE |

SYNCHRONIZER KIT 3rd/4th
OLD MODEL

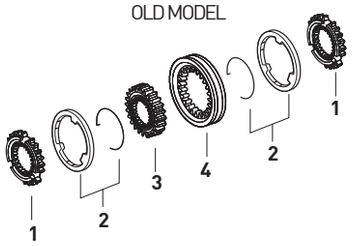


| Fig. | Kacmaz No. | Oem No | Oem Old No | Pcs. | Ürün Tanımı | Description |
|---|---|---|---|---|---|---|
| | K21.06212 | | | Kit | 3./4.VİTES SENK.KİT | SYNCH.KIT 3rd/4th |
| 1 | K21.03027 | 945 262 0534 | (389 262 5034) | 2 | 3./4.VİTES SENKROMENÇ | ENGAGING RING |
| 2 | K21.03016 | 389 262 0737 | (387 262 0937) | 2 | 3./4.VİTES FRENLEME (Mo) | SYNCHRONIZING CONE / Mo |
| 3 | K21.03149 | 389 262 4735 | (389 262 4635) | 1 | 3./4.VİTES YILDIZ DİŞLİ | SYNCHRONIZER HUB |
| 4 | K21.03009 | 945 262 2723 | (945 262 0423) | 1 | 3./4.VİTES HALKA | ENGAGING SLEEVE |
| | | | (389 262 2623) | | | |

SYNCHRONIZER KIT 3rd/4th
OLD MODEL

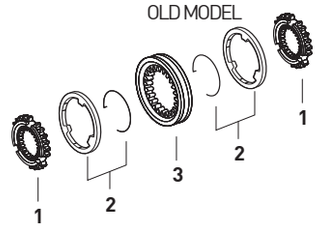


| Fig. | Kacmaz No. | Oem No | Oem Old No | Pcs. | Ürün Tanımı | Description |
|---|---|---|---|---|---|---|
| | K21.06514 | | | Kit | 3./4.VİTES SENK.KİT | SYNCH.KIT 3rd/4th |
| 1 | K21.03027 | 945 262 0534 | (389 262 5034) | 2 | 3./4.VİTES SENKROMENÇ | ENGAGING RING |
| 2 | K21.03016 | 389 262 0737 | (387 262 0937) | 2 | 3./4.VİTES FRENLEME (Mo) | SYNCHRONIZING CONE / Mo |
| 3 | K21.03009 | 945 262 2723 | (945 262 0423) | 1 | 3./4.VİTES HALKA | ENGAGING SLEEVE |
| | | | (389 262 2623) | | | |

SYNCHRONIZER KIT 1st/2nd
NEW MODEL

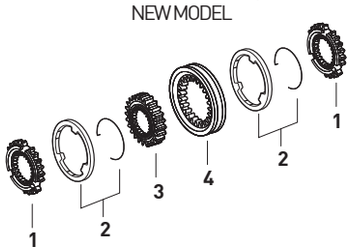


| Fig. | Kacmaz No. | Oem No | Oem Old No | Pcs. | Ürün Tanımı | Description |
|---|---|---|---|---|---|---|
| | K21.06214 | | | Kit | 1./2.VİTES SENK.KİT | SYNCH.KIT 1st/2nd |
| 1 | K21.03160 | 945 262 5534 | | 2 | 1./2.VİTES SENKROMENÇ | ENGAGING RING |
| 2 | K21.03148 | 947 260 1945 | (947 260 4645) | 2 | 1./2.VİTES FRENLEME (Mo) | SYNCHRONIZING CONE / Mo |
| | | | (946 262 6137) | | | |
| 3 | K21.03161 | 389 262 2535 | (945 262 0135) | 1 | 1./2.VİTES YILDIZ DİŞLİ | SYNCHRONIZER HUB |
| 4 | K21.03151 | 945 262 6523 | (930 262 0523) | 1 | 1./2.VİTES HALKA | ENGAGING SLEEVE |



**Original parts names, oem numbers, symbols and descriptions used in this catalogue are for reference purposes only.**

| Fig. | Kacmaz No. | Oem No | Oem Old No | Pcs. | Ürün Tanımı | Description |
|---|---|---|---|---|---|---|
| | K21.06516 | | | Kit | 1./2.VİTES SENK.KİT | SYNCH.KIT 1st/2nd |
| 1 | K21.03160 | 945 262 5534 | | 2 | 1./2.VİTES SENKROMENÇ | ENGAGING RING |
| 2 | K21.03148 | 947 260 1945 | (947 260 4645) | 2 | 1./2.VİTES FRENLEME (Mo) | SYNCHRONIZING CONE / Mo |
| | | | (946 262 6137) | | | |
| 3 | K21.03151 | 945 262 6523 | (930 262 0523) | 1 | 1./2.VİTES HALKA | ENGAGING SLEEVE |

SYNCHRONIZER KIT 1st/2nd
NEW MODEL

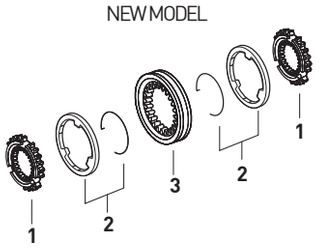


| Fig. | Kacmaz No. | Oem No | Oem Old No | Pcs. | Ürün Tanımı | Description |
|---|---|---|---|---|---|---|
| | K21.06215 | | | Kit | 1./2.VİTES SENK.KİT | SYNCH.KIT 1st/2nd |
| 1 | K21.03025 | 945 262 0434 | (389 262 0034) | 2 | 1.VİTES SENKROMENÇ | ENGAGING RING |
| 2 | K21.03016 | 389 262 0737 | (387 262 0937) | 2 | 1./2.VİTES FRENLEME (Mo) | SYNCHRONIZING CONE / Mo |
| 3 | K21.03161 | 389 262 2535 | (945 262 0135) | 1 | 1./2.VİTES YILDIZ DİŞLİ | SYNCHRONIZER HUB |
| 4 | K21.03009 | 945 262 2723 | (945 262 0423) | 1 | 1./2.VİTES HALKA | ENGAGING SLEEVE |
| | | | (389 262 2623) | | | |

SYNCHRONIZER KIT 1st/2nd
OLD MODEL

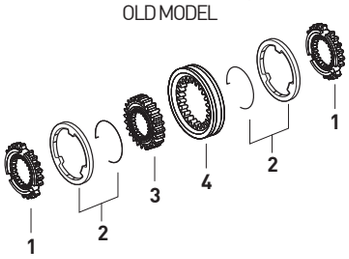


| Fig. | Kacmaz No. | Oem No | Oem Old No | Pcs. | Ürün Tanımı | Description |
|---|---|---|---|---|---|---|
| | K21.06210 | | | Kit | 3./4.VİTES SENK.KİT | SYNCH.KIT 1st/2nd |
| 1 | K21.03015 | 389 262 0637 | (387 262 0837) | 2 | 3./4.VİTES FRENLEME (Mo) | SYNCHRONIZING CONE / Mo |
| 2 | K21.03002 | 945 262 2823 | (945 262 0323) | 1 | 3./4.VİTES HALKA | ENGAGING SLEEVE |
| | | | (945 262 0623) | | | |
| 3 | K21.03007 | 945 262 4034 | (389 262 5334) | 1 | 4.VİTES SENKROMENÇ | ENGAGING RING |

SYNCHRONIZER KIT 3rd/4th
OLD MODEL

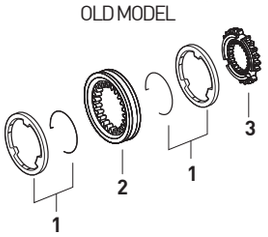


| Fig. | Kacmaz No. | Oem No | Oem Old No | Pcs. | Ürün Tanımı | Description |
|---|---|---|---|---|---|---|
| | K21.06213 | | | Kit | 3./4.VİTES SENK.KİT | SYNCH.KIT 1st/2nd |
| 1 | K21.03007 | 945 262 4034 | (389 262 5334) | 1 | 4.VİTES SENKROMENÇ | ENGAGING RING |
| 2 | K21.03015 | 389 262 0637 | (387 262 0837) | 2 | 3./4.VİTES FRENLEME (Mo) | SYNCHRONIZING CONE / Mo |
| 3 | K21.03150 | 389 262 2835 | | 1 | 3./4.VİTES YILDIZ DİŞLİ | SYNCHRONIZER HUB |
| 4 | K21.03002 | 945 262 2823 | (945 262 0323) | 1 | 3./4.VİTES HALKA | ENGAGING SLEEVE |
| | | | (945 262 0623) | | | |

SYNCHRONIZER KIT 3rd/4th
OLD MODEL

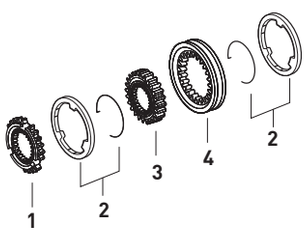


| Fig. | Kacmaz No. | Oem No | Oem Old No | Pcs. | Ürün Tanımı | Description |
|---|---|---|---|---|---|---|
| | K21.06387 | | | Kit | 1./2.VİTES SENK.KİT | SYNCH.KIT 1st/2nd |
| 1 | K21.03025 | 945 262 0434 | (389 262 0034) | 1 | 1.VİTES SENKROMENÇ | ENGAGING RING |
| 2 | K21.03016 | 389 262 0737 | (387 262 0937) | 2 | 1./2.VİTES FRENLEME (Mo) | SYNCHRONIZING CONE / Mo |
| 3 | K21.03161 | 389 262 2535 | (945 262 0135) | 1 | 1./2.VİTES YILDIZ DİŞLİ | SYNCHRONIZER HUB |
| 4 | K21.03009 | 945 262 2723 | (945 262 0423) | 1 | 1./2.VİTES HALKA | ENGAGING SLEEVE |
| | | | (389 262 2623) | | | |

SYNCHRONIZER KIT 1st/2nd

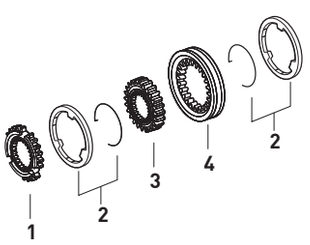


| Fig. | Kacmaz No. | Oem No | Oem Old No | Pcs. | Ürün Tanımı | Description |
|---|---|---|---|---|---|---|
| | K21.06517 | | | Kit | 1./2.VİTES SENK.KİT | SYNCH.KIT 1st/2nd |
| 1 | K21.03025 | 945 262 0434 | (389 262 0034) | 2 | 1./2.VİTES SENKROMENÇ | ENGAGING RING |
| 2 | K21.03016 | 389 262 0737 | (387 262 0937) | 2 | 1./2.VİTES FRENLEME (Mo) | SYNCHRONIZING CONE / Mo |
| 3 | K21.03009 | 945 262 2723 | (945 262 0423) | 1 | 1./2.VİTES HALKA | ENGAGING SLEEVE |
| | | | (389 262 2623) | | | |

SYNCHRONIZER KIT 1st/2nd
OLD MODEL

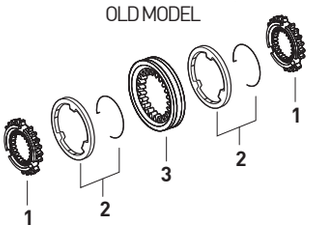


| Fig. | Kacmaz No. | Oem No | Oem Old No | Pcs. | Ürün Tanımı | Description |
|---|---|---|---|---|---|---|
| | K21.06216 | | | Kit | AĞIR SERİ.SENK.KİT | SYNCH.KIT PLANETARY |
| 1 | K21.03037 | 947 260 3036 | (947 260 0836) | 1 | TABLA SENKROMENÇ | FOLLOWER RING |
| 2 | K21.03185 | 947 260 0945 | | 2 | AĞIR SERİ FRENLEME (Mo) | SYNCHRONIZING CONE / Mo |
| 3 | K21.03079 | 389 262 4935 | (389 262 2035) | 1 | A.SERİ YILDIZ DİŞLİ 73 DİŞ | SYNCHRONIZER HUB 73 T. |
| 4 | K21.03033 | 945 262 6923 | (930 262 0623) | 1 | AĞIR SERİ HALKA | ENGAGING SLEEVE |
| 5 | K21.03431 | 960 265 0049 | (947 265 0349) | 2 | A.SERİ HİLAL PABUCU | SLIDING PAD |
| 6 | K21.03186 | 945 262 3834 | | 1 | SERİ SENKROMENÇ | ENGAGING RING |

SYNCHRONIZER KIT PLANETARY
NEW MODEL

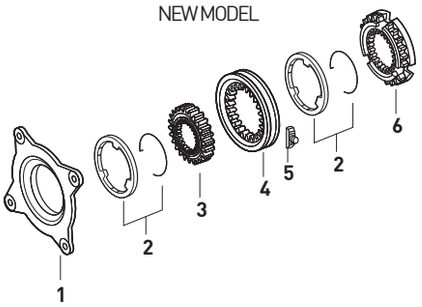






Original parts names, oem numbers, symbols and descriptions used in this catalogue are for reference purposes only.

SYNCHRONIZER KIT PLANETARY
NEW MODEL

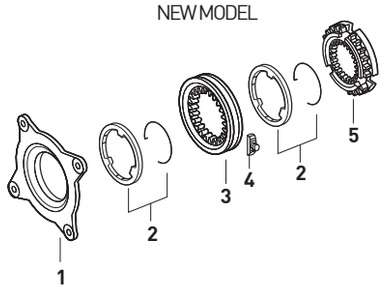


| Fig. | Kacmaz No. | Oem No | Oem Old No | Pcs. | Ürün Tanımı | Description |
|---|---|---|---|---|---|---|
| | K21.06518 | | | Kit | AĞIR SERİ.SENK.KİT | SYNCH.KIT PLANETARY |
| 1 | K21.03037 | 947 260 3036 | (947 260 0836) | 1 | TABLA SENKROMENÇ | FOLLOWER RING |
| 2 | K21.03185 | 947 260 0945 | | 2 | AĞIR SERİ FRENLEME (Mo) | SYNCHRONIZING CONE / Mo |
| 3 | K21.03033 | 945 262 6923 | (930 262 0623) | 1 | AĞIR SERİ HALKA | ENGAGING SLEEVE |
| 4 | K21.03431 | 960 265 0049 | (947 265 0349) | 2 | A.SERİ HİLAL PABUCU | SLIDING PAD |
| 5 | K21.03186 | 945 262 3834 | | 1 | SERİ SENKROMENÇ | ENGAGING RING |

SYNCHRONIZER KIT PLANETARY
NEW MODEL

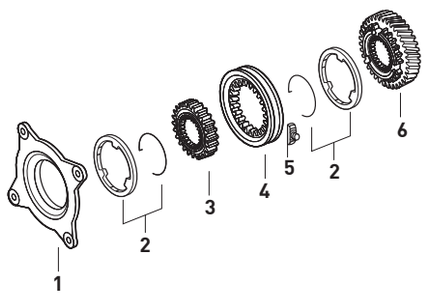


| Fig. | Kacmaz No. | Oem No | Oem Old No | Pcs. | Ürün Tanımı | Description |
|---|---|---|---|---|---|---|
| | K21.06388 | | | Kit | AĞIR SERİ SENK.KİT | SYNCH.KIT PLANETARY |
| 1 | K21.03037 | 947 260 3036 | (947 260 0836) | 1 | TABLA SENKROMENÇ | FOLLOWER RING |
| 2 | K21.03185 | 947 260 0945 | | 2 | AĞIR SERİ FRENLEME (Mo) | SYNCHRONIZING CONE / Mo |
| 3 | K21.03079 | 389 262 4935 | (389 262 2035) | 1 | A.SERİ YILDIZ DİŞLİ 73 DİŞ | SYNCHRONIZER HUB 73 T. |
| 4 | K21.03033 | 945 262 6923 | (930 262 0623) | 1 | AĞIR SERİ HALKA | ENGAGING SLEEVE |
| 5 | K21.03431 | 960 265 0049 | (947 265 0349) | 2 | A.SERİ HİLAL PABUCU | SLIDING PAD |
| 6 | K21.03188 | 930 264 0320 | | 1 | RETARDER DİŞLİSİ 64 DİŞ | RETARDER GEAR 64 T. |

SYNCHRONIZER KIT PLANETARY
NEW MODEL

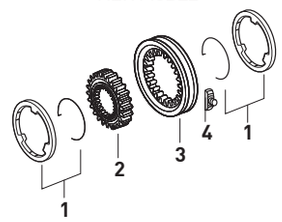


| Fig. | Kacmaz No. | Oem No | Oem Old No | Pcs. | Ürün Tanımı | Description |
|---|---|---|---|---|---|---|
| | K21.06204 | | | Kit | AĞIR SERİ SENK.KİT | SYNCH.KIT PLANETARY |
| 1 | K21.03185 | 947 260 0945 | | 2 | AĞIR SERİ FRENLEME (Mo) | SYNCHRONIZING CONE / Mo |
| 2 | K21.03079 | 389 262 4935 | (389 262 2035) | 1 | A.SERİ YILDIZ DİŞLİ 73 DİŞ | SYNCHRONIZER HUB 73 T. |
| 3 | K21.03033 | 945 262 6923 | (930 262 0623) | 1 | AĞIR SERİ HALKA | ENGAGING SLEEVE |
| 4 | K21.03431 | 960 265 0049 | (947 265 0349) | 2 | A.SERİ HİLAL PABUCU | SLIDING PAD |

SYNCHRONIZER KIT PLANETARY
NEW MODEL

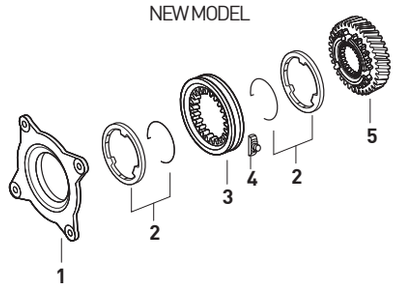


| Fig. | Kacmaz No. | Oem No | Oem Old No | Pcs. | Ürün Tanımı | Description |
|---|---|---|---|---|---|---|
| | K21.06442 | | | Kit | AĞIR SERİ SENK.KİT | SYNCH.KIT PLANETARY |
| 1 | K21.03037 | 947 260 3036 | (947 260 0836) | 1 | TABLA SENKROMENÇ | FOLLOWER RING |
| 2 | K21.03185 | 947 260 0945 | | 2 | AĞIR SERİ FRENLEME (Mo) | SYNCHRONIZING CONE / Mo |
| 3 | K21.03033 | 945 262 6923 | (930 262 0623) | 1 | AĞIR SERİ HALKA | ENGAGING SLEEVE |
| 4 | K21.03431 | 960 265 0049 | (947 265 0349) | 2 | A.SERİ HİLAL PABUCU | SLIDING PAD |
| 5 | K21.03188 | 930 264 0320 | | 1 | RETARDER DİŞLİSİ 64 DİŞ | RETARDER GEAR 64 T. |

SYNCHRONIZER KIT PLANETARY
OLD TYPE

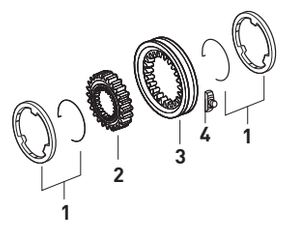


| Fig. | Kacmaz No. | Oem No | Oem Old No | Pcs. | Ürün Tanımı | Description |
|---|---|---|---|---|---|---|
| | K21.06194 | | | Kit | AĞIR SERİ SENK.KİT | SYNCH.KIT PLANETARY |
| 1 | K21.03017 | 389 262 0537 | (389 262 0037) | 2 | AĞIR SERİ FRENLEME (Mo) | SYNCHRONIZING CONE / Mo |
| 2 | K21.03079 | 389 262 4935 | (389 262 2035) | 1 | A.SERİ YILDIZ DİŞLİ 73 DİŞ | SYNCHRONIZER HUB 73 T. |
| 3 | K21.03028 | 945 262 6623 | (945 262 0823) | 1 | AĞIR SERİ HALKA 73 DİŞ | ENGAGING SLEEVE 73 T. |
| | | | (389 262 1623) | | | |
| | | | (389 262 3823) | | | |
| 4 | K21.03406 | 389 265 2449 | (389 265 1249) | 2 | A.SERİ HİLAL PABUCU | SLIDING PAD |

SYNCHRONIZER KIT PLANETARY
OLD TYPE

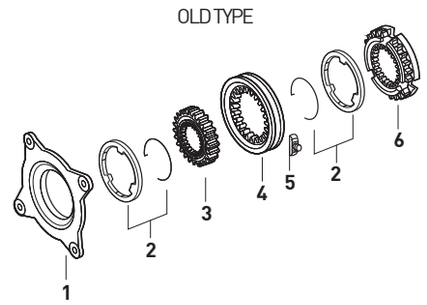


| Fig. | Kacmaz No. | Oem No | Oem Old No | Pcs. | Ürün Tanımı | Description |
|---|---|---|---|---|---|---|
| | K21.06217 | | | Kit | AĞIR SERİ SENK.KİT | SYNCH.KIT PLANETARY |
| 1 | K21.03018 | 389 260 2036 | | 1 | TABLA SENKROMENÇ | FOLLOWER RING |
| 2 | K21.03017 | 389 262 0537 | (389 262 0037) | 2 | AĞIR SERİ FRENLEME (Mo) | SYNCHRONIZING CONE / Mo |
| 3 | K21.03079 | 389 262 4935 | (389 262 2035) | 1 | A.SERİ YILDIZ DİŞLİ 73 DİŞ | SYNCHRONIZER HUB 73 T. |
| 4 | K21.03028 | 945 262 6623 | (945 262 0823) | 1 | AĞIR SERİ HALKA 73 DİŞ | ENGAGING SLEEVE 73 T. |
| | | | (389 262 1623) | | | |
| | | | (389 262 3823) | | | |
| 5 | K21.03406 | 389 265 2449 | (389 265 1249) | 2 | A.SERİ HİLAL PABUCU | SLIDING PAD |
| 6 | K21.03187 | 389 262 9234 | (945 262 1234) | 1 | SERİ SENKROMENÇ | ENGAGING RING |



**Original parts names, oem numbers, symbols and descriptions used in this catalogue are for reference purposes only.**

| Fig. | Kacmaz No. | Oem No | Oem Old No | Pcs. | Ürün Tanımı | Description |
|---|---|---|---|---|---|---|
| | K21.06389 | | | Kit | AĞIR SERİ.SENK.KİT | SYNCH.KIT PLANETARY |
| 1 | K21.03018 | 389 260 2036 | | 1 | TABLA SENKROMENÇ | FOLLOWER RING |
| 2 | K21.03017 | 389 262 0537 | (389 262 0037) | 2 | AĞIR SERİ FRENLEME (Mo) | SYNCHRONIZING CONE / Mo |
| 3 | K21.03079 | 389 262 4935 | (389 262 2035) | 1 | A.SERİ YILDIZ DİŞLİ 73 DİŞ | SYNCHRONIZER HUB 73 T. |
| 4 | K21.03028 | 945 262 6623 | (945 262 0823) | 1 | AĞIR SERİ HALKA 73 DİŞ | ENGAGING SLEEVE 73 T. |
| 5 | K21.03406 | 389 265 2449 | (389 265 1249) | 2 | A.SERİ HİLAL PABUCU | SLIDING PAD |
| 6 | K21.06050 | 945 264 0130 | (389 264 0730) | 1 | RETARDER DİŞLİSİ | RETARDER GEAR |

SYNCHRONIZER KIT PLANETARY

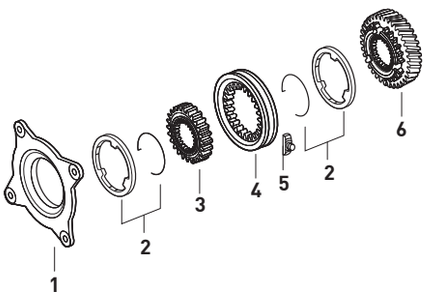


| Fig. | Kacmaz No. | Oem No | Oem Old No | Pcs. | Ürün Tanımı | Description |
|---|---|---|---|---|---|---|
| | K21.06520 | | | Kit | AĞIR SERİ.SENK.KİT | SYNCH.KIT PLANETARY |
| 1 | K21.03018 | 389 260 2036 | | 1 | TABLA SENKROMENÇ | FOLLOWER RING |
| 2 | K21.03017 | 389 262 0537 | (389 262 0037) | 2 | AĞIR SERİ FRENLEME (Mo) | SYNCHRONIZING CONE / Mo |
| 3 | K21.03028 | 945 262 6623 | (945 262 0823) | 1 | AĞIR SERİ HALKA 73 DİŞ | ENGAGING SLEEVE 73 T. |
| 4 | K21.03406 | 389 265 2449 | (389 265 1249) | 2 | A.SERİ HİLAL PABUCU | SLIDING PAD |
| 5 | K21.03187 | 389 262 9234 | (945 262 1234) | 1 | SERİ SENKROMENÇ | ENGAGING RING |

SYNCHRONIZER KIT PLANETARY
OLD MODEL

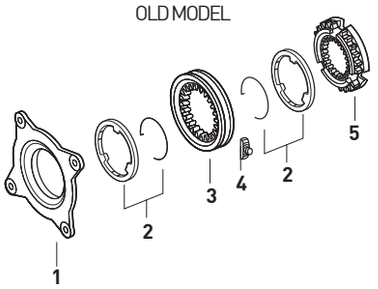


| Fig. | Kacmaz No. | Oem No | Oem Old No | Pcs. | Ürün Tanımı | Description |
|---|---|---|---|---|---|---|
| 1 | K21.06185 | 945 264 0305 | | 1 | PTO MİLİ | INTERM.SHAFT |
| 1 | K21.03496 | 945 264 0805 | (945 264 0505) | 1 | PTO MİLİ | INTERM.SHAFT |
| 1 | K21.03493 | 389 264 0205 | (387 264 0405) | 1 | PTO MİLİ | INTERM.SHAFT |
| 1 | K21.03494 | 387 264 0505 | | 1 | PTO MİLİ | INTERM.SHAFT |
| 2 | | 013 981 0610 | (013 981 0510) | 1 | PTO MİLİ MAS.BİLYA | NEEDLE CAGE |
| 3 | K21.03613 | 004 981 9225 | (004 981 8625) | 1 | PTO MİL BİLYASI | ROLLER BEARING |
| 4 | K21.06964 | 000471 045000 | (003 994 3741) | 1 | PTO MİL SEKMANI | RETAINING RING |
| 5 | | 945 264 0687 | (389 264 0587) | 1 | PTO MİL HALKASI | RING |
| 6 | | 389 264 0223 | | 1 | PTO MİL KOVANI | SLIDING COLLAR |
| 7 | | 000472 080000 | | 1 | PTO SEKMANI | RETAINING RING |
| 8 | | 900055 035301 | | 1 | PTO SEKMANI | RETAINING RING |
| 9 | | 006 981 2525 | (008 981 4125) | 1 | PTO KAPAK BİLYASI | ROLLER BEARING |
| 10 | | 389 264 0780 | (602 264 0280) | 1 | PTO KAPAK CONTASI | GASKET |
| 11 | | 945 264 0611 | | 1 | PTO BAĞ.KAPAĞI | COVER |
| 11 | | 389 264 0311 | | 1 | PTO BAĞ.KAPAĞI | COVER |

P.T.O. (POWER TAKE OFF)

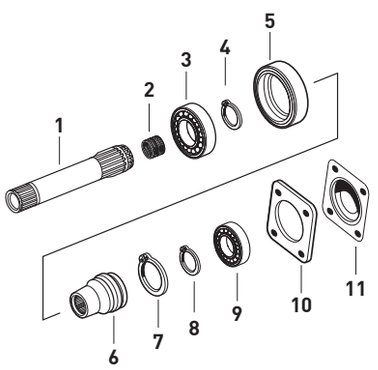


| Fig. | Kacmaz No. | Oem No | Oem Old No | Pcs. | Ürün Tanımı | Description |
|---|---|---|---|---|---|---|
| 1 | K21.03085 | 947 264 0005 | (389 269 0310) | 1 | YAĞ POMPA MİLİ | OIL PUMP SHAFT |
| 1 | K21.03670 | 947 264 0105 | | 1 | YAĞ POMPA MİLİ (RETARDER) | OIL PUMP SHAFT |
| 2 | K21.03511 | 029 997 5748 | | 1 | YAĞ POMPA KAPAK ORİNGİ | O-RING |
| 3 | K21.03558 | 947 264 0287 | | 1 | YAĞ POMPA KAPAĞI | OIL PUMP COVER |
| 4 | K21.03613 | 004 981 9225 | (004 981 8625) | 1 | PTO MİL BİLYASI | ROLLER BEARING |
| 5 | K21.06964 | 000471 045000 | (003 994 3741) | 1 | PTO MİL BİLYA SEKMANI | RETAINING RING |
| 6 | K21.06998 | 017 981 1705 | | 1 | PTO BORU DİŞLİ BİLYASI | ROLLER BEARING |
| 7 | | 947 260 4708 | | 1 | PTO BORU DİŞLİ | GEAR |
| 8 | | 017 981 1805 | | 2 | PTO BORU DİŞLİ BİLYASI | ROLLER BEARING |
| 9 | K21.04334 | 945 264 0006 | | 1 | PTO ARA ADAPTÖR MİLİ | INTERM.SHAFT |
| 10 | | 387 264 3652 | | 2 | BİLYA AYAR RAYNELİ | THRUST WASHER |
| 10 | | 387 264 3752 | | 2 | BİLYA AYAR RAYNELİ | THRUST WASHER |
| 10 | | 387 264 3852 | | 2 | BİLYA AYAR RAYNELİ | THRUST WASHER |
| 11 | | 000988 022010 | | 2 | BİLYA AYAR PULU | THRUST WASHER |
| 12 | K21.04333 | 385 993 5201 | | 1 | YAY | SPRING |
| 13 | | 912009 022100 | | 1 | BİLYA AYAR PUL SEKMANI | RETAINING RING |
| 14 | K21.04332 | 000625 000629 | | 1 | PTO MIL ŞAPKASI | PTO SHAFT CAP |
| 15 | | 016 981 6705 | | 1 | PTO BORU DİŞLİ BİLYASI | ROLLER BEARING |
| 16 | | 947 264 0621 | (947 264 0521) | 1 | PTO BORU DİŞLİ | GEAR |
| 17 | K21.04362 | | | kit | ARA ADAPTÖR MİLİ KOMPLE | INTERM.SHAFT COMP. |
| 18 | K21.06346 | 970 260 0457 | | kit | P.T.O VENTİLİ | VALVE |

P.T.O. (POWER TAKE OFF)

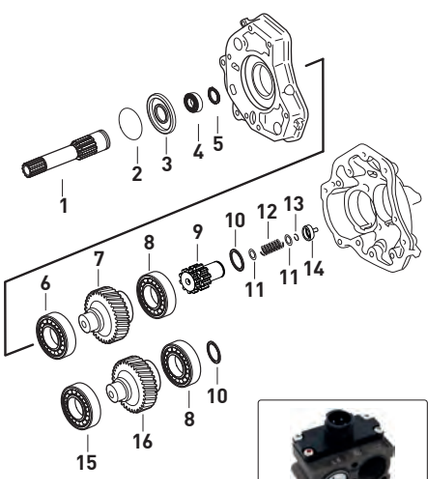





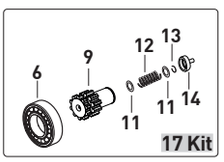

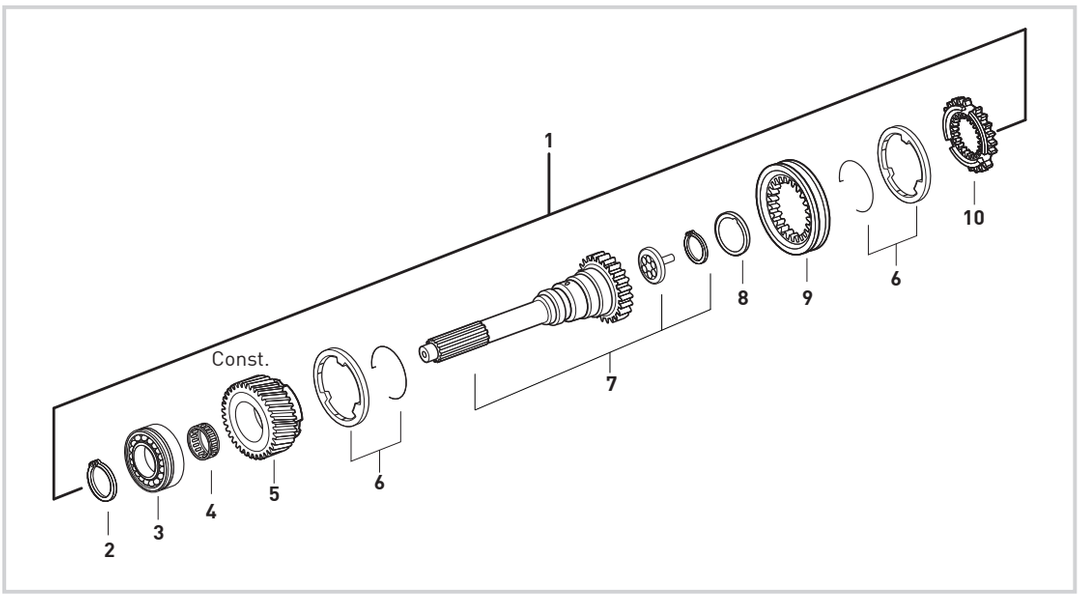


## NEW TYPE

| Fig. | Kacmaz No. | Oem No | Oem Old No | Pcs. | Ürün Tanımı | Description | Sizes |
|---|---|---|---|---|---|---|---|
| 1 | K21.03579 | | | Kit | PRİZDİREK KOMPLE | INPUT SHAFT COMPLETE | |
| 2 | K21.04346 | 387 262 8773 | | 1 | PRİZDİREK ÖN BİLYA SEKMANI | RETAINING RING | 3,20mm |
| 3 | K21.03618 | 011 981 1305 | (014 981 9005) | 1 | PRİZDİREK ÖN BİLYA | ROLLER BEARING | 75X140X34,25mm |
| 4 | K21.03815 | 016 981 0010 | (018 981 8710) | 1 | TAKVİYE DİŞLİ MASURA BİLYA | NEEDLE CAGE | 89X97X40mm |
| 5 | K21.03130 | 945 262 9817 | (945 262 5417) | 1 | TAKVİYE DİŞLİSİ 32 DİŞ | CONSTANT GEAR 32 T. | |
| | | | (945 262 7517) | | | | |
| 6 | K21.03136 | 945 260 2245 | (946 262 6337) | 2 | TAKVİYE FRENLEME (Mo) | SYNCHRONIZING CONE / Mo | |
| 7 | K21.03142 | 389 262 8201 | (945 262 0103) | 1 | PRİZDİREK 60 DİŞ | INPUT SHAFT 60 T. | |
| | | | (389 262 6201) | | | | |
| 8 | K21.03510 | 001 262 0362 | (000 262 8762) | 1 | PRİZDİREK ARKA KEÇE | OIL SEAL | 78,5X105X7mm |
| 9 | K21.03137 | 945 262 6823 | (945 262 6423) | 1 | TAKVİYE HALKA | ENGAGING SLEEVE | |
| 10 | K21.03147 | 945 262 7734 | (945 262 3634) | 1 | TAKVİYE SENKROMENÇ | ENGAGING RING | |

## OLD TYPE

| Fig. | Kacmaz No. | Oem No | Oem Old No | Pcs. | Ürün Tanımı | Description | Sizes |
|---|---|---|---|---|---|---|---|
| 1 | K21.03547 | 945 260 7792 | | Kit | PRİZDİREK KOMPLE | INPUT SHAFT COMPLETE | |
| 2 | K21.04346 | 387 262 8773 | | 1 | PRİZDİREK ÖN BİLYA SEKMANI | RETAINING RING | 3,20mm |
| 3 | K21.03618 | 011 981 1305 | (014 981 9005) | 1 | PRİZDİREK ÖN BİLYA | ROLLER BEARING | 75X140X34,25mm |
| 4 | K21.03815 | 016 981 0010 | (018 981 8710) | 1 | TAKVİYE DİŞLİ MASURA BİLYA | NEEDLE CAGE | 89X97X40mm |
| 5 | K21.03030 | 945 262 4110 | (945 262 1610) | 1 | TAKVİYE DİŞLİSİ 32 DİŞ | CONSTANT GEAR 32 T. | |
| | | | (945 262 0010) | | | | |
| 6 | K21.03015 | 389 262 0637 | (387 262 0837) | 2 | TAKVİYE FRENLEME (Mo) | SYNCHRONIZING CONE / Mo | |
| 7 | K21.03142 | 389 262 8201 | (945 262 0103) | 1 | PRİZDİREK 60 DİŞ | INPUT SHAFT 60 T. | |
| | | | (389 262 6201) | | | | |
| 8 | K21.03510 | 001 262 0362 | (000 262 8762) | 1 | PRİZDİREK ARKA KEÇE | OIL SEAL | 78,5X105X7mm |
| 9 | K21.03002 | 945 262 2823 | (945 262 0323) | 1 | TAKVİYE HALKA | ENGAGING SLEEVE | |
| 10 | K21.03024 | 389 262 5434 | (945 262 0334) | 1 | TAKVİYE SENKROMENÇ | ENGAGING RING | |
| | | | (945 262 0134) | | | | |



**Original parts names, oem numbers, symbols and descriptions used in this catalogue are for reference purposes only.**

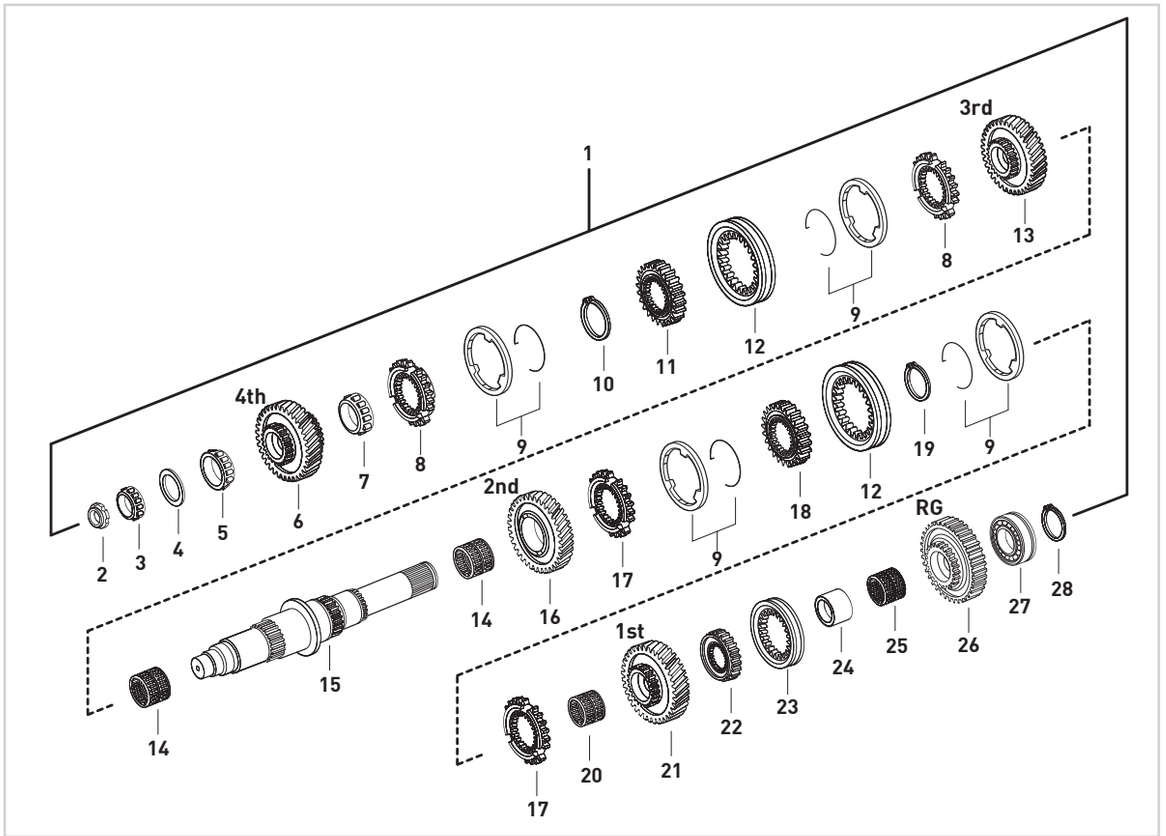


| Fig. | Kacmaz No. | Oem No | Oem Old No | Pcs. | Ürün Tanımı | Description | Sizes |
|---|---|---|---|---|---|---|---|
| 1 | K21.03561 | | | Kit | KAMALI MİL KOMPLE | MAIN SHAFT COMPLETE | |
| 2 | K21.03432 | 945 990 0250 | (945 990 0150) | 1 | KAMALI MİL SOMUNU | NUT | M30X1,5 |
| 3 | K21.03619 | 015 981 1605 | (013 981 1105) | 1 | KAMALI MİL UÇ BİLYA | ROLLER BEARING | 39,69X40,39mm |
| 4 | K21.94095 | | | 1 | 3.VİTES ÖN BİLYA AYAR PULU | THRUST WASHER | 1,70mm |
| 5 | K21.03629 | 015 981 7605 | (015 981 2005) | 1 | 4.VİTES DİŞLİSİ ÖN BİLYA | ROLLER BEARING | 50X41mm |
| 6 | K21.03026 | 945 262 8810 | (945 262 9310) | 1 | 4.VİTES DİŞLİSİ 29 DİŞ | GEAR 4th 29 T. | |
| 7 | K21.03631 | 015 981 7705 | (014 981 1605) | 1 | 4.VİTES DİŞLİSİ ARKA BİLYA | ROLLER BEARING | 55X23mm |
| 8 | K21.03146 | 945 262 8234 | (945 262 5434) | 2 | 3./4.VİTES SENKROMENÇ | ENGAGING RING | |
| 9 | K21.03148 | 947 260 1945 | (947 260 4645) | 4 | 1./2./3./4.VİTES FRENLEME (Mo) | SYNCHRONIZING CONE / Mo | |
| 10 | K21.06588 | 387 262 8173 | | 1 | 3./4.VİT.SENK.YIL.DİŞLİ EMN.SEK. | RETAINING RING | 2,80mm |
| 11 | K21.03149 | 389 262 4735 | (389 262 4635) | 1 | 3./4.VİTES YILDIZ DİŞLİ | SYNCHRONIZER HUB | |
| 12 | K21.03151 | 945 262 6523 | (930 262 0523) | 2 | 1./2./3./4.VİTES HALKA | ENGAGING SLEEVE | |
| 13 | K21.03152 | 945 262 3513 | (930 262 0713) | 1 | 3.VİTES DİŞLİSİ 34 DİŞ | GEAR 3rd 34 T. | |
| 14 | K21.03810 | 018 981 6610 | (010 981 5310) | 2 | 2./3.VİTES MASURA BİLYA | NEEDLE CAGE | 85X93X53mm |
| 15 | K21.03156 | 945 262 4505 | | 1 | KAMALI MİL | MAIN SHAFT | |
| 16 | K21.03158 | 389 262 2812 | (389 262 2512) | 1 | 2.VİTES DİŞLİSİ 39 DİŞ | GEAR 2nd 39 T. | |
| 17 | K21.03160 | 945 262 5534 | | 2 | 1./2.VİTES SENKROMENÇ | ENGAGING RING | |
| 18 | K21.03161 | 389 262 2535 | (945 262 0135) | 1 | 1./2.VİTES YILDIZ DİŞLİ | SYNCHRONIZER HUB | |
| 19 | K21.04343 | 387 262 2073 | | 1 | 1./2.VİT.SENK.YIL.DİŞLİ EMN.SEK. | RETAINING RING | 2,40mm |
| 20 | K21.03839 | 945 981 0010 | (018 981 8110) | 1 | 1.VİTES MASURA BİLYA | NEEDLE CAGE | 75X83X48mm |
| 21 | K21.03162 | 946 262 0811 | (389 262 2711) | 1 | 1.VİTES DİŞLİSİ 44 DİŞ | GEAR 1st 44 T. | |
| 22 | K21.03059 | 389 262 0135 | | 1 | GERİ VİTES YILDIZ DİŞLİ | SYNCHRONIZER HUB | |
| 23 | K21.03060 | 389 262 1723 | (389 262 0023) | 1 | GERİ VİTES HALKASI | ENGAGING SLEEVE | |
| 24 | K21.03112 | 389 262 2550 | (389 262 1650) | 1 | GERİ VİTES MASURA BİLYA ÇANAĞI | BEARING RACE | |
| 25 | K21.03803 | 009 981 1510 | (017 981 7810) | 1 | GERİ VİTES MASURA BİLYA | NEEDLE CAGE | 78X86X35mm |
| 26 | K21.03165 | 945 262 3233 | (389 262 2033) | 1 | GERİ VİTES DİŞLİSİ 40 DİŞ | REVERSE GEAR 40 T. | |
| 27 | K21.03623 | 014 981 6105 | (016 981 1305) | 1 | KAMALI MİL ARKA BİLYA | ROLLER BEARING | 60X130X33,2mm |
| 28 | K21.04331 | 007 994 1841 | (006 994 9941) | 1 | KAMALI MİL ARKA BİLYA SEKMANI | RETAINING RING | 2,50mm |



Original parts names, oem numbers, symbols and descriptions used in this catalogue are for reference purposes only.

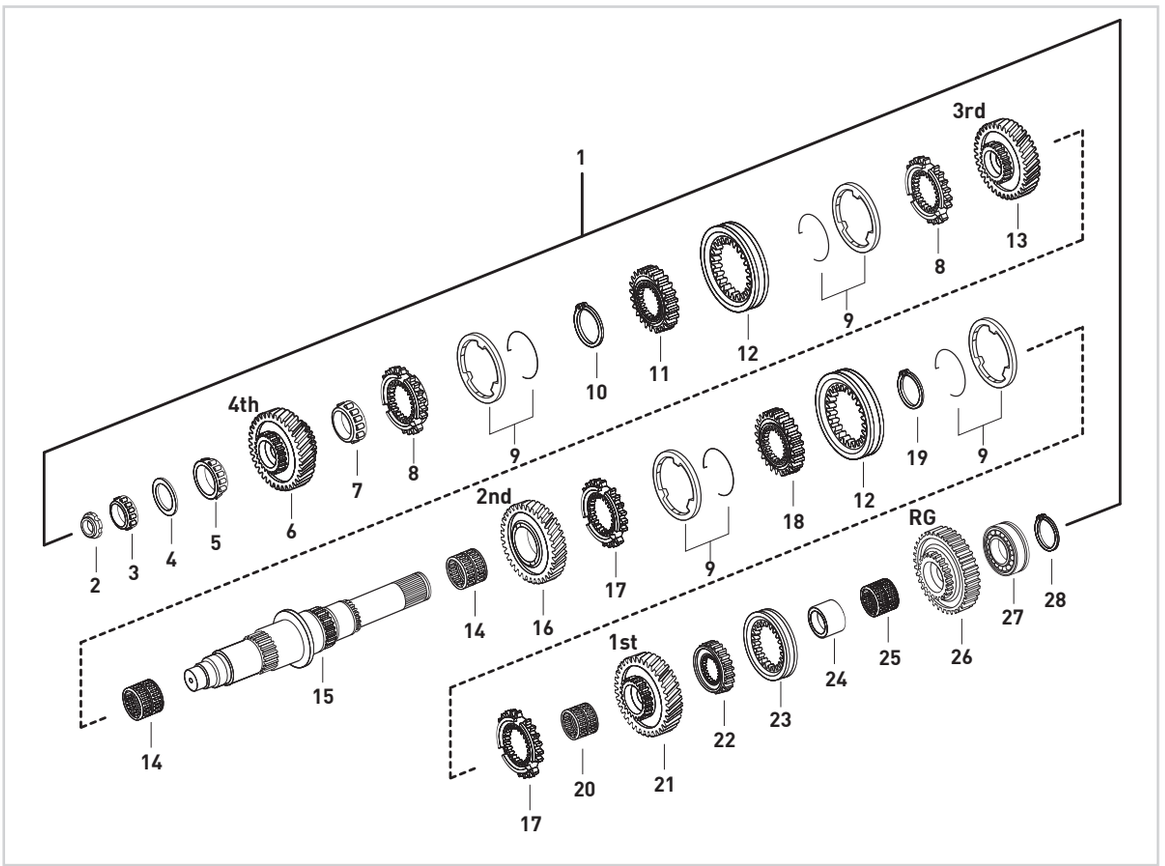


| Fig. | Kacmaz No. | Oem No | Oem Old No | Pcs. | Ürün Tanımı | Description | Sizes |
|---|---|---|---|---|---|---|---|
| 1 | K21.06379 | | | Kit | KAMALI MİL KOMPLE | MAIN SHAFT COMPLETE | |
| 2 | K21.03432 | 945 990 0250 | (945 990 0150) | 1 | KAMALI MİL SOMUNU | NUT | M30X1,5 |
| 3 | K21.03619 | 015 981 1605 | (013 981 1105) | 1 | KAMALI MİL UÇ BİLYA | ROLLER BEARING | 39,69X40,39mm |
| 4 | K21.94095 | | | 1 | 3.VİT.ÖN BİLYA AYAR PULU | THRUST WASHER | 1,70mm |
| 5 | K21.03629 | 015 981 7605 | (015 981 2005) | 1 | 4.VİTES DİŞLİSİ ÖN BİLYA | ROLLER BEARING | 50X41mm |
| 6 | K21.03026 | 945 262 8810 | (945 262 9310) | 1 | 4.VİTES DİŞLİSİ 29 DİŞ | GEAR 4th 29 T. | |
| 7 | K21.03631 | 015 981 7705 | (014 981 1605) | 1 | 4.VİTES DİŞLİSİ ARKA BİLYA | ROLLER BEARING | 55X23mm |
| 8 | K21.03146 | 945 262 8234 | (945 262 5434) | 2 | 3./4.VİTES SENKROMENÇ | ENGAGING RING | |
| 9 | K21.03148 | 947 260 1945 | (947 260 4645) | 4 | 1./2./3./4.VİTES FRENLEME (Mo) | SYNCHRONIZING CONE / Mo | |
| 10 | K21.06588 | 387 262 8173 | | 1 | 3./4.VİT.SENK.YIL.DİŞLİ EMN.SEK. | RETAINING RING | 2,80mm |
| 11 | K21.03149 | 389 262 4735 | (389 262 4635) | 1 | 3./4.VİTES YILDIZ DİŞLİ | SYNCHRONIZER HUB | |
| 12 | K21.03151 | 945 262 6523 | (930 262 0523) | 2 | 1./2./3./4.VİTES HALKA | ENGAGING SLEEVE | |
| 13 | K21.03152 | 945 262 3513 | (930 262 0713) | 1 | 3.VİTES DİŞLİSİ 34 DİŞ | GEAR 3rd 34 T. | |
| 14 | K21.03810 | 018 981 6610 | (010 981 5310) | 2 | 2./3.VİTES MASURA BİLYA | NEEDLE CAGE | 85X93X53mm |
| 15 | K21.06042 | 930 262 1205 | (930 262 2405) | 1 | KAMALI MİL | MAIN SHAFT | |
| 16 | K21.03158 | 389 262 2812 | (389 262 2512) | 1 | 2.VİTES DİŞLİSİ 39 DİŞ | GEAR 2nd 39 T. | |
| 17 | K21.03160 | 945 262 5534 | | 2 | 1./2.VİTES SENKROMENÇ | ENGAGING RING | |
| 18 | K21.03161 | 389 262 2535 | (945 262 0135) | 1 | 1./2.VİTES YILDIZ DİŞLİ | SYNCHRONIZER HUB | |
| 19 | K21.04343 | 387 262 2073 | | 1 | 1./2.VİT.SENK.YIL.DİŞLİ EMN.SEK. | RETAINING RING | 2,40mm |
| 20 | K21.03839 | 945 981 0010 | (018 981 8110) | 1 | 1.VİTES MASURA BİLYA | NEEDLE CAGE | 75X83X48mm |
| 21 | K21.03162 | 946 262 0811 | (389 262 2711) | 1 | 1.VİTES DİŞLİSİ 44 DİŞ | GEAR 1st 44 T. | |
| 22 | K21.03059 | 389 262 0135 | | 1 | GERİ VİTES YILDIZ DİŞLİ | SYNCHRONIZER HUB | |
| 23 | K21.03060 | 389 262 1723 | (389 262 0023) | 1 | GERİ VİTES HALKASI | ENGAGING SLEEVE | |
| 24 | K21.03065 | 389 262 0150 | | 1 | GERİ VİTES MASURA BİLYA ÇANAĞI | BEARING RACE | |
| 25 | K21.03813 | 013 981 1810 | (013 981 2610) | 1 | GERİ VİTES MASURA BİLYA | NEEDLE CAGE | 78X86X33mm |
| 26 | K21.06045 | 930 262 0233 | | 1 | GERİ VİTES DİŞLİSİ 40 DİŞ | REVERSE GEAR 40 T. | |
| 27 | K21.03661 | 002 981 8181 | | 1 | KAMALI MİL ARKA BİLYA | ROLLER BEARING | 60X130X35,2mm |
| 28 | K21.04331 | 007 994 1841 | (006 994 9941) | 1 | KAMALI MİL ARKA BİLYA SEKMANI | RETAINING RING | 2,50mm |

**Original parts names, oem numbers, symbols and descriptions used in this catalogue are for reference purposes only.**

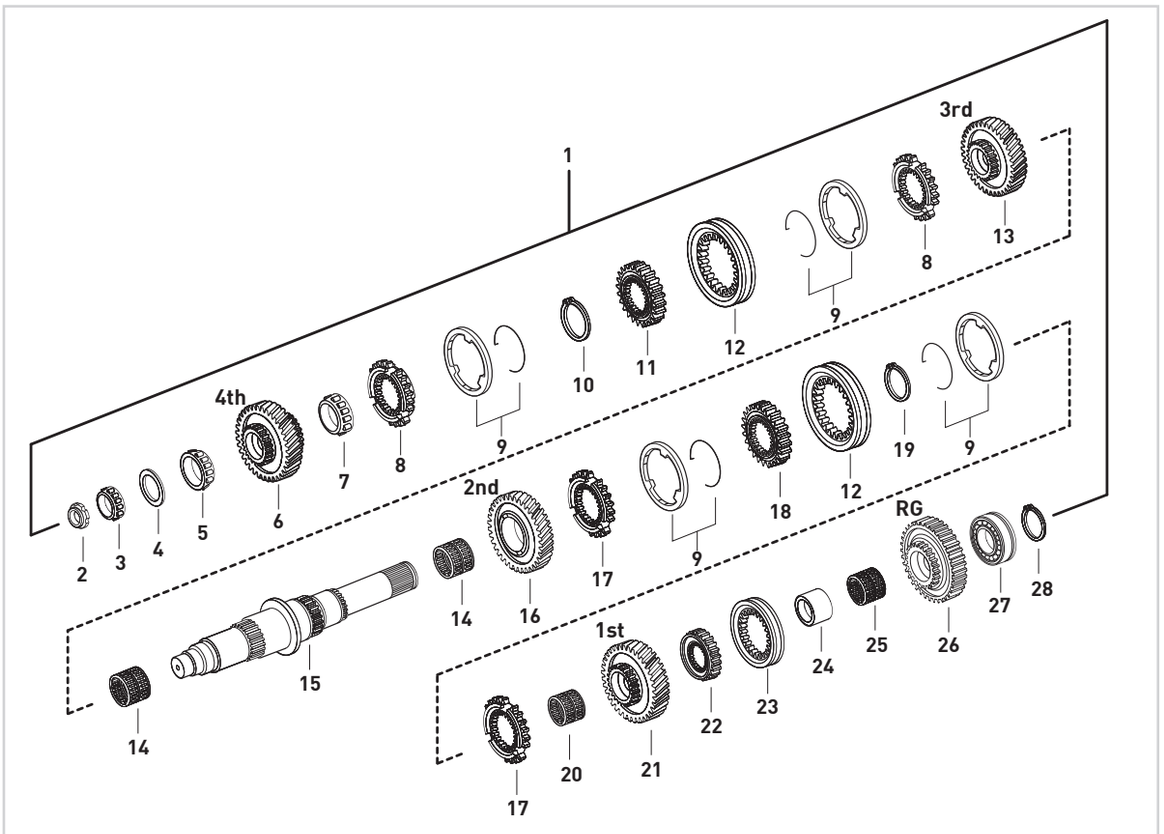


| Fig. | Kacmaz No. | Oem No | Oem Old No | Pcs. | Ürün Tanımı | Description | Sizes |
|---|---|---|---|---|---|---|---|
| 1 | K21.03560 | 947 260 6622 | | Kit | KAMALI MİL KOMPLE | MAIN SHAFT COMPLETE | |
| 2 | K21.03432 | 945 990 0250 | (945 990 0150) | 1 | KAMALI MİL SOMUNU | NUT | M30X1,5 |
| 3 | K21.03619 | 015 981 1605 | (013 981 1105) | 1 | KAMALI MİL UÇ BİLYA | ROLLER BEARING | 39,69X40,39mm |
| 4 | K21.94095 | | | 1 | 3.VİTES ÖN BİLYA AYAR PULU | THRUST WASHER | 1,70mm |
| 5 | K21.03629 | 015 981 7605 | (015 981 2005) | 1 | 4.VİTES DİŞLİSİ ÖN BİLYA | ROLLER BEARING | 50X41mm |
| 6 | K21.03026 | 945 262 8810 | (945 262 9310) | 1 | 4.VİTES DİŞLİSİ 29 DİŞ | GEAR 4th 29 T. | |
| 7 | K21.03631 | 015 981 7705 | (014 981 1605) | 1 | 4.VİTES DİŞLİSİ ARKA BİLYA | ROLLER BEARING | 55X23mm |
| 8 | K21.03027 | 945 262 0534 | (389 262 5034) | 2 | 3./4.VİTES SENKROMENÇ | ENGAGING RING | |
| 9 | K21.03016 | 389 262 0737 | (387 262 0937) | 4 | 1./2./3./4.VİTES FRENLEME (Mo) | SYNCHRONIZING CONE / Mo | |
| 10 | K21.06588 | 387 262 8173 | | 1 | 3./4.VİT.SENK.YIL.DİŞLİ EMN.SEK. | RETAINING RING | 2,80mm |
| 11 | K21.03149 | 389 262 4735 | (389 262 4635) | 1 | 3./4.VİTES YILDIZ DİŞLİ | SYNCHRONIZER HUB | |
| 12 | K21.03009 | 945 262 2723 | (945 262 0423) | 2 | 1./2./3./4.VİTES SENKROMENÇ HALKA | ENGAGING SLEEVE | |
| 13 | K21.03152 | 945 262 3513 | (930 262 0713) | 1 | 3.VİTES DİŞLİSİ 34 DİŞ | GEAR 3rd 34 T. | |
| 14 | K21.03810 | 018 981 6610 | (010 981 5310) | 2 | 2./3.VİTES MASURA BİLYA | NEEDLE CAGE | 85X93X53mm |
| 15 | K21.03156 | 945 262 4505 | | 1 | KAMALI MİL | MAIN SHAFT | |
| 16 | K21.03158 | 389 262 2812 | (389 262 2512) | 1 | 2.VİTES DİŞLİSİ 39 DİŞ | GEAR 2nd 39 T. | |
| 17 | K21.03025 | 945 262 0434 | (389 262 0034) | 2 | 1./2.VİTES SENKROMENÇ | ENGAGING RING | |
| 18 | K21.03161 | 389 262 2535 | (945 262 0135) | 1 | 1./2.VİTES YILDIZ DİŞLİ | SYNCHRONIZER HUB | |
| 19 | K21.04343 | 387 262 2073 | | 1 | 1./2.VİT.SENK.YIL.DİŞLİ EMN.SEK. | RETAINING RING | 2,40mm |
| 20 | K21.03839 | 945 981 0010 | (018 981 8110) | 1 | 1.VİTES MASURA BİLYA | NEEDLE CAGE | 75X83X48mm |
| 21 | K21.03162 | 946 262 0811 | (389 262 2711) | 1 | 1.VİTES DİŞLİSİ 44 DİŞ | GEAR 1st 44 T. | |
| 22 | K21.03059 | 389 262 0135 | | 1 | GERİ VİTES YILDIZ DİŞLİ | SYNCHRONIZER HUB | |
| 23 | K21.03060 | 389 262 1723 | (389 262 0023) | 1 | GERİ VİTES HALKASI | ENGAGING SLEEVE | |
| 24 | K21.03112 | 389 262 2550 | (389 262 1650) | 1 | GERİ VİTES MASURA BİLYA ÇANAĞI | BEARING RACE | |
| 25 | K21.03803 | 009 981 1510 | (017 981 7810) | 1 | GERİ VİTES MASURA BİLYA | NEEDLE CAGE | 78X86X35mm |
| 26 | K21.03165 | 945 262 3233 | (389 262 2033) | 1 | GERİ VİTES DİŞLİSİ 40 DİŞ | REVERSE GEAR 40 T. | |
| 27 | K21.03623 | 014 981 6105 | (016 981 1305) | 1 | KAMALI MİL ARKA BİLYA | ROLLER BEARING | 60X130X33,2mm |
| 28 | K21.04331 | 007 994 1841 | (006 994 9941) | 1 | KAMALI MİL ARKA BİLYA SEKMANI | RETAINING RING | 2,50mm |



Original parts names, oem numbers, symbols and descriptions used in this catalogue are for reference purposes only.

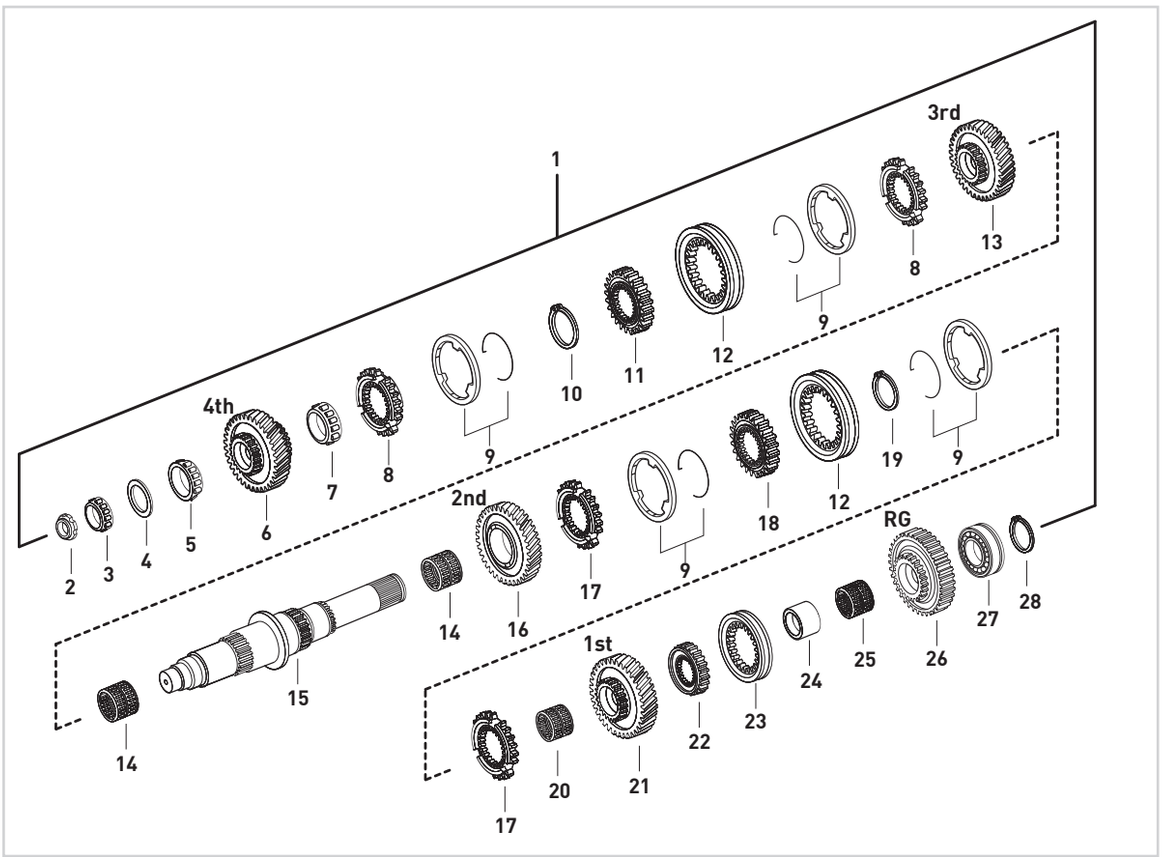


| Fig. | Kacmaz No. | Oem No | Oem Old No | Pcs. | Ürün Tanımı | Description | Sizes |
|---|---|---|---|---|---|---|---|
| 1 | K21.04341 | | | Kit | KAMALI MİL KOMPLE | MAIN SHAFT COMPLETE | |
| 2 | K21.03432 | 945 990 0250 | (945 990 0150) | 1 | KAMALI MİL SOMUNU | NUT | M30X1,5 |
| 3 | K21.03619 | 015 981 1605 | (013 981 1105) | 1 | KAMALI MİL UÇ BİLYA | ROLLER BEARING | 39,69X40,39mm |
| 4 | K21.94095 | | | 1 | 3.VİTES ÖN BİLYA AYAR PULU | THRUST WASHER | 1,70mm |
| 5 | K21.03629 | 015 981 7605 | (015 981 2005) | 1 | 4.VİTES DİŞLİSİ ÖN BİLYA | ROLLER BEARING | 50X41mm |
| 6 | K21.03026 | 945 262 8810 | (945 262 9310) | 1 | 4.VİTES DİŞLİSİ 29 DİŞ | GEAR 4th 29 T. | |
| 7 | K21.03631 | 015 981 7705 | (014 981 1605) | 1 | 4.VİTES DİŞLİSİ ARKA BİLYA | ROLLER BEARING | 55X23mm |
| 8 | K21.03146 | 945 262 8234 | (945 262 5434) | 2 | 3./4.VİTES SENKROMENÇ | ENGAGING RING | |
| 9 | K21.03148 | 947 260 1945 | (947 260 4645) | 4 | 1./2./3./4.VİTES FRENLEME (Mo) | SYNCHRONIZING CONE / Mo | |
| 10 | K21.06588 | 387 262 8173 | | 1 | 3./4.VİT.SENK.YIL.DİŞLİ EMN.SEK. | RETAINING RING | 2,80mm |
| 11 | K21.03149 | 389 262 4735 | (389 262 4635) | 1 | 3./4.VİTES YILDIZ DİŞLİ | SYNCHRONIZER HUB | |
| 12 | K21.03151 | 945 262 6523 | (930 262 0523) | 2 | 1./2./3./4.VİTES HALKA | ENGAGING SLEEVE | |
| 13 | K21.03152 | 945 262 3513 | (930 262 0713) | 1 | 3.VİTES DİŞLİSİ 34 DİŞ | GEAR 3rd 34 T. | |
| 14 | K21.03810 | 018 981 6610 | (010 981 5310) | 2 | 2./3.VİTES MASURA BİLYA | NEEDLE CAGE | 85X93X53mm |
| 15 | K21.06042 | 930 262 1205 | (930 262 2405) | 1 | KAMALI MİL | MAIN SHAFT | |
| 16 | K21.03158 | 389 262 2812 | (389 262 2512) | 1 | 2.VİTES DİŞLİSİ 39 DİŞ | GEAR 2nd 39 T. | |
| 17 | K21.03160 | 945 262 5534 | | 2 | 1./2.VİTES SENKROMENÇ | ENGAGING RING | |
| 18 | K21.03161 | 389 262 2535 | (945 262 0135) | 1 | 1./2.VİTES YILDIZ DİŞLİ | SYNCHRONIZER HUB | |
| 19 | K21.04343 | 387 262 2073 | | 1 | 1./2.VİT.SENK.YIL.DİŞLİ EMN.SEK. | RETAINING RING | 2,40mm |
| 20 | K21.03839 | 945 981 0010 | (018 981 8110) | 1 | 1.VİTES MASURA BİLYA | NEEDLE CAGE | 75X83X48mm |
| 21 | K21.03162 | 946 262 0811 | (389 262 2711) | 1 | 1.VİTES DİŞLİSİ 44 DİŞ | GEAR 1st 44 T. | |
| 22 | K21.03163 | 945 262 3835 | | 1 | GERİ VİTES YILDIZ DİŞLİ | SYNCHRONIZER HUB | |
| 23 | K21.03061 | 389 262 1823 | (389 262 0923) | 1 | GERİ VİTES HALKASI | ENGAGING SLEEVE | |
| 24 | K21.03065 | 389 262 0150 | | 1 | GERİ VİTES MASURA BİLYA ÇANAĞI | BEARING RACE | |
| 25 | K21.03813 | 013 981 1810 | (013 981 2610) | 1 | GERİ VİTES MASURA BİLYA | NEEDLE CAGE | 78X86X33mm |
| 26 | K21.06044 | 960 262 0033 | | 1 | GERİ VİTES DİŞLİSİ 40 DİŞ | REVERSE GEAR 40 T. | |
| 27 | K21.03661 | 002 981 8181 | | 1 | KAMALI MİL ARKA BİLYA | ROLLER BEARING | 60X130X35,2mm |
| 28 | K21.04331 | 007 994 1841 | (006 994 9941) | 1 | KAMALI MİL ARKA BİLYA SEKMANI | RETAINING RING | 2,50mm |



**Original parts names, oem numbers, symbols and descriptions used in this catalogue are for reference purposes only.**

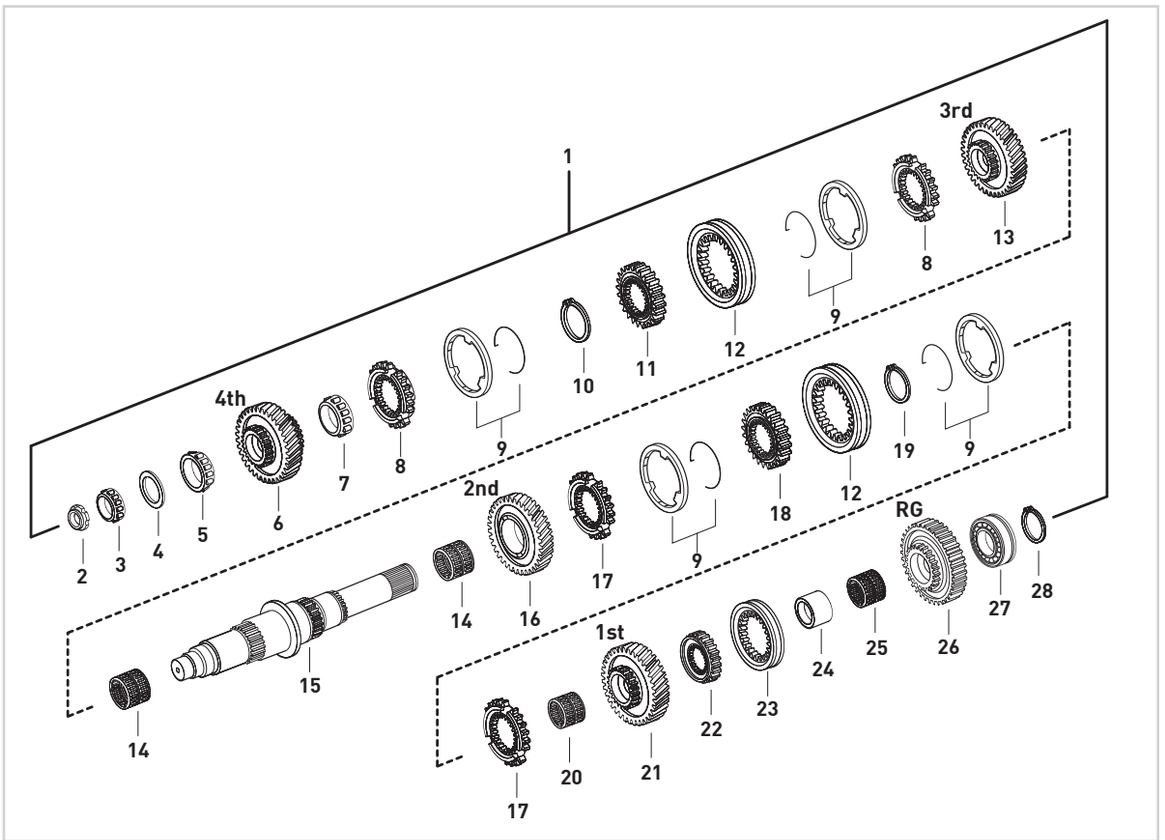


| Fig. | Kacmaz No. | Oem No | Oem Old No | Pcs. | Ürün Tanımı | Description | Sizes |
|---|---|---|---|---|---|---|---|
| 1 | K21.03552 | | | Kit | KAMALI MİL KOMPLE | MAIN SHAFT COMPLETE | |
| 2 | K21.03432 | 945 990 0250 | (945 990 0150) | 1 | KAMALI MİL SOMUNU | NUT | M30X1,5 |
| 3 | K21.03619 | 015 981 1605 | (013 981 1105) | 1 | KAMALI MİL UÇ BİLYA | ROLLER BEARING | 39,69X40,39mm |
| 4 | K21.94095 | | | 1 | 3.VİTES ÖN BİLYA AYAR PULU | THRUST WASHER | 1,70mm |
| 5 | K21.03629 | 015 981 7605 | (015 981 2005) | 1 | 4.VİTES DİŞLİSİ ÖN BİLYA | ROLLER BEARING | 50X41mm |
| 6 | K21.03026 | 945 262 8810 | (945 262 9310) | 1 | 4.VİTES DİŞLİSİ 29 DİŞ | GEAR 4th 29 T. | |
| 7 | K21.03631 | 015 981 7705 | (014 981 1605) | 1 | 4.VİTES DİŞLİSİ ARKA BİLYA | ROLLER BEARING | 55X23mm |
| 8 | K21.03146 | 945 262 8234 | (945 262 5434) | 2 | 3./4.VİTES SENKROMENÇ | ENGAGING RING | |
| 9 | K21.03148 | 947 260 1945 | (947 260 4645) | 4 | 1./2./3./4.VİTES FRENLEME (Mo) | SYNCHRONIZING CONE / Mo | |
| 10 | K21.06588 | 387 262 8173 | | 1 | 3./4.VİT.SENK.YIL.DİŞLİ EMN.SEK. | RETAINING RING | 2,80mm |
| 11 | K21.03149 | 389 262 4735 | (389 262 4635) | 1 | 3./4.VİTES YILDIZ DİŞLİ | SYNCHRONIZER HUB | |
| 12 | K21.03151 | 945 262 6523 | (930 262 0523) | 2 | 1./2./3./4.VİTES HALKA | ENGAGING SLEEVE | |
| 13 | K21.03152 | 945 262 3513 | (930 262 0713) | 1 | 3.VİTES DİŞLİSİ 34 DİŞ | GEAR 3rd 34 T. | |
| 14 | K21.03810 | 018 981 6610 | (010 981 5310) | 2 | 2./3.VİTES MASURA BİLYA | NEEDLE CAGE | 85X93X53mm |
| 15 | K21.03156 | 945 262 4505 | | 1 | KAMALI MİL | MAIN SHAFT | |
| 16 | K21.03158 | 389 262 2812 | (389 262 2512) | 1 | 2.VİTES DİŞLİSİ 39 DİŞ | GEAR 2nd 39 T. | |
| 17 | K21.03160 | 945 262 5534 | | 2 | 1./2.VİTES SENKROMENÇ | ENGAGING RING | |
| 18 | K21.03161 | 389 262 2535 | (945 262 0135) | 1 | 1./2.VİTES YILDIZ DİŞLİ | SYNCHRONIZER HUB | |
| 19 | K21.04343 | 387 262 2073 | | 1 | 1./2.VİT.SENK.YIL.DİŞLİ EMN.SEK. | RETAINING RING | 2,40mm |
| 20 | K21.03839 | 945 981 0010 | (018 981 8110) | 1 | 1.VİTES MASURA BİLYA | NEEDLE CAGE | 75X83X48mm |
| 21 | K21.03162 | 946 262 0811 | (389 262 2711) | 1 | 1.VİTES DİŞLİSİ 44 DİŞ | GEAR 1st 44 T. | |
| 22 | K21.03164 | 389 262 3935 | | 1 | GERİ VİTES YILDIZ DİŞLİ | SYNCHRONIZER HUB | |
| 23 | K21.03061 | 389 262 1823 | (389 262 0923) | 1 | GERİ VİTES HALKASI | ENGAGING SLEEVE | |
| 24 | K21.03112 | 389 262 2550 | (389 262 1650) | 1 | GERİ VİTES MASURA BİLYA ÇANAĞI | BEARING RACE | |
| 25 | K21.03803 | 009 981 1510 | (017 981 7810) | 1 | GERİ VİTES MASURA BİLYA | NEEDLE CAGE | 78X86X35mm |
| 26 | K21.03168 | 945 262 3333 | (389 262 2133) | 1 | GERİ VİTES DİŞLİSİ 40 DİŞ | REVERSE GEAR 40 T. | |
| 27 | K21.03623 | 014 981 6105 | (016 981 1305) | 1 | KAMALI MİL ARKA BİLYA | ROLLER BEARING | 60X130X33,2mm |
| 28 | K21.04331 | 007 994 1841 | (006 994 9941) | 1 | KAMALI MİL ARKA BİLYA SEKMANI | RETAINING RING | 2,50mm |



Original parts names, oem numbers, symbols and descriptions used in this catalogue are for reference purposes only.

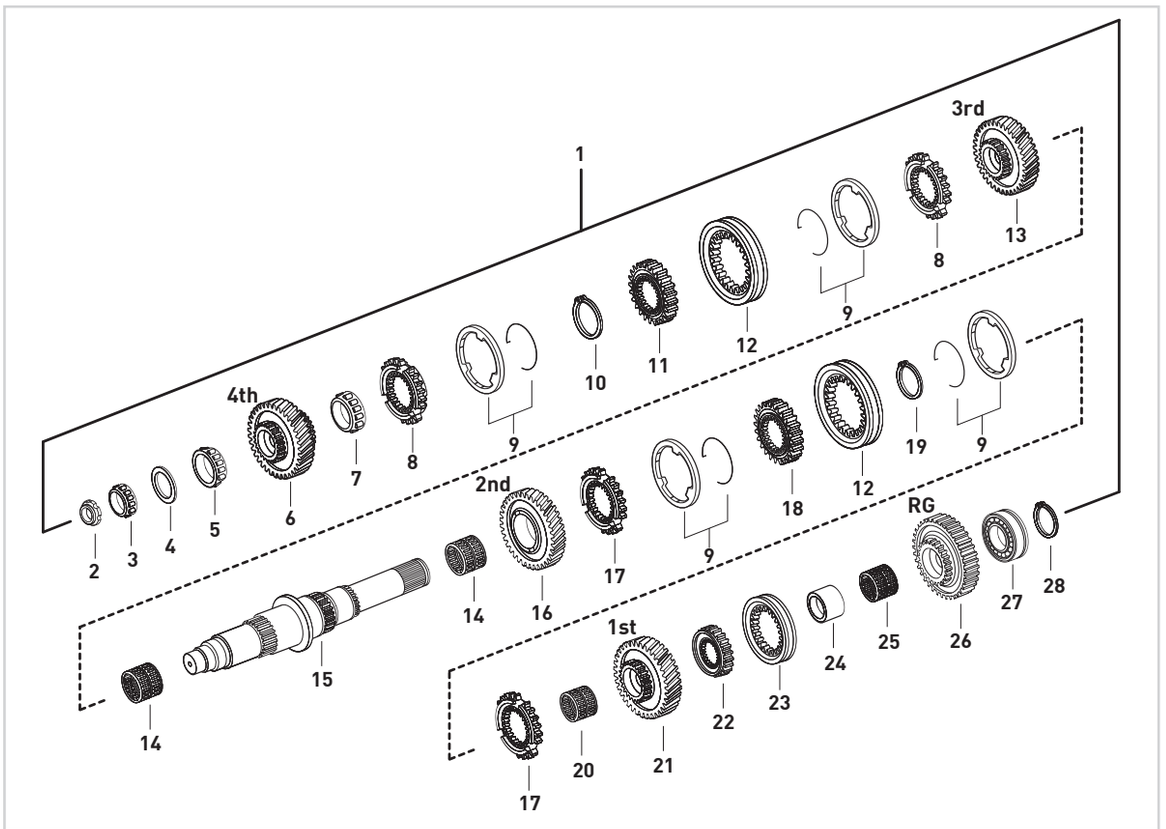


| Fig. | Kacmaz No. | Oem No | Oem Old No | Pcs. | Ürün Tanımı | Description | Sizes |
|---|---|---|---|---|---|---|---|
| 1 | K21.06305 | 947 260 6522 | | Kit | KAMALI MİL KOMPLE | MAIN SHAFT COMPLETE | |
| 2 | K21.03432 | 945 990 0250 | (945 990 0150) | 1 | KAMALI MİL SOMUNU | NUT | M30X1,5 |
| 3 | K21.03619 | 015 981 1605 | (013 981 1105) | 1 | KAMALI MİL UÇ BİLYA | ROLLER BEARING | 39,69X40,39mm |
| 4 | K21.94095 | | | 1 | 3.VİTES ÖN BİLYA AYAR PULU | THRUST WASHER | 1,70mm |
| 5 | K21.03629 | 015 981 7605 | (015 981 2005) | 1 | 4.VİTES DİŞLİSİ ÖN BİLYA | ROLLER BEARING | 50X41mm |
| 6 | K21.03026 | 945 262 8810 | (945 262 9310) | 1 | 4.VİTES DİŞLİSİ 29 DİŞ | GEAR 4th 29 T. | |
| 7 | K21.03631 | 015 981 7705 | (014 981 1605) | 1 | 4.VİTES DİŞLİSİ ARKA BİLYA | ROLLER BEARING | 55X23mm |
| 8 | K21.03027 | 945 262 0534 | (389 262 5034) | 2 | 3./4.VİTES SENKROMENÇ | ENGAGING RING | |
| 9 | K21.03016 | 389 262 0737 | (387 262 0937) | 4 | 1./2./3./4.VİTES FRENLEME (Mo) | SYNCHRONIZING CONE / Mo | |
| 10 | K21.06588 | 387 262 8173 | | 1 | 3./4.VİT.SENK.YIL.DİŞLİ EMN.SEK. | RETAINING RING | 2,80mm |
| 11 | K21.03149 | 389 262 4735 | (389 262 4635) | 1 | 3./4.VİTES YILDIZ DİŞLİ | SYNCHRONIZER HUB | |
| 12 | K21.03009 | 945 262 2723 | (945 262 0423) | 2 | 1./2./3./4.VİTES HALKA | ENGAGING SLEEVE | |
| 13 | K21.03152 | 945 262 3513 | (930 262 0713) | 1 | 3.VİTES DİŞLİSİ 34 DİŞ | GEAR 3rd 34 T. | |
| 14 | K21.03810 | 018 981 6610 | (010 981 5310) | 2 | 2./3.VİTES MASURA BİLYA | NEEDLE CAGE | 85X93X53mm |
| 15 | K21.03156 | 945 262 4505 | | 1 | KAMALI MİL | MAIN SHAFT | |
| 16 | K21.03158 | 389 262 2812 | (389 262 2512) | 1 | 2.VİTES DİŞLİSİ 39 DİŞ | GEAR 2nd 39 T. | |
| 17 | K21.03025 | 945 262 0434 | (389 262 0034) | 2 | 1./2.VİTES SENKROMENÇ | ENGAGING RING | |
| 18 | K21.03161 | 389 262 2535 | (945 262 0135) | 1 | 1./2.VİTES YILDIZ DİŞLİ | SYNCHRONIZER HUB | |
| 19 | K21.04343 | 387 262 2073 | | 1 | 1./2.VİT.SENK.YIL.DİŞLİ EMN.SEK. | RETAINING RING | 2,40mm |
| 20 | K21.03839 | 945 981 0010 | (018 981 8110) | 1 | 1.VİTES MASURA BİLYA | NEEDLE CAGE | 75X83X48mm |
| 21 | K21.03162 | 946 262 0811 | (389 262 2711) | 1 | 1.VİTES DİŞLİSİ 44 DİŞ | GEAR 1st. 44 T. | |
| 22 | K21.03164 | 389 262 3935 | | 1 | GERİ VİTES YILDIZ DİŞLİ | SYNCHRONIZER HUB | |
| 23 | K21.03061 | 389 262 1823 | (389 262 0923) | 1 | GERİ VİTES HALKASI | ENGAGING SLEEVE | |
| 24 | K21.03112 | 389 262 2550 | (389 262 1650) | 1 | GERİ VİTES MASURA BİLYA ÇANAĞI | BEARING RACE | |
| 25 | K21.03803 | 009 981 1510 | (017 981 7810) | 1 | GERİ VİTES MASURA BİLYA | NEEDLE CAGE | 78X86X35mm |
| 26 | K21.03168 | 945 262 3333 | (389 262 2133) | 1 | GERİ VİTES DİŞLİSİ 40 DİŞ | REVERSE GEAR 40 T. | |
| 27 | K21.03623 | 014 981 6105 | (016 981 1305) | 1 | KAMALI MİL ARKA BİLYA | ROLLER BEARING | 60X130X33,2mm |
| 28 | K21.04331 | 007 994 1841 | (006 994 9941) | 1 | KAMALI MİL ARKA BİLYA SEKMANI | RETAINING RING | 2,50mm |



**Original parts names, oem numbers, symbols and descriptions used in this catalogue are for reference purposes only.**

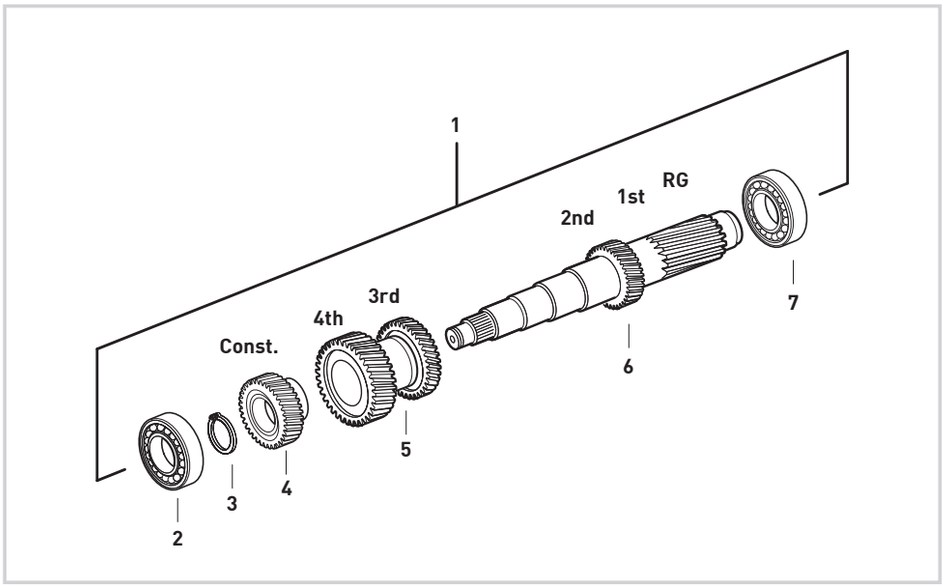


| Fig. | Kacmaz No. | Oem No | Oem Old No | Pcs. | Ürün Tanımı | Description | Sizes |
|---|---|---|---|---|---|---|---|
| 1 | K21.03553 | 945 260 7024 | | Kit | GRUP MİLİ KOMPLE | COUNTER SHAFT COMPLETE | |
| 2 | K21.03606 | 015 981 9005 | (014 981 1405) | 1 | GRUP MİLİ ÖN BİLYA | ROLLER BEARING | 50,8X100X35mm |
| 3 | K21.06425 | 389 994 0041 | | 1 | GRUP MİLİ ÖN BİLYA SEKMANI | RETAINING RING | 2,50mm |
| 4 | K21.03170 | 945 263 0710 | (945 263 0810) | 1 | TAKVİYE DİŞLİ KARŞILIĞI 31 DİŞ | CONSTANT GEAR 31 T. | |
| | | | (389 263 1410) | | | | |
| 5 | K21.03171 | 945 263 2913 | (945 263 0213) | 1 | 3./4.VİTES DİŞLİ KARŞILIĞI 27/34 DİŞ | DOUB.GEAR 3rd/4th 27/34 T. | |
| | | | (945 263 1013) | | | | |
| | | | (945 263 0513) | | | | |
| | | | (945 263 1413) | | | | |
| | | | (945 263 1513) | | | | |
| | | | (945 263 7113) | | | | |
| | | | (945 263 7013) | | | | |
| | | | (945 263 6913) | | | | |
| 6 | K21.03175 | 945 263 2902 | (945 263 0902) | 1 | GRUP MİLİ 16/21 DİŞ | COUNTER SHAFT 16/21 T. | |
| | | | (389 263 3102) | | | | |
| | | | (389 263 2502) | | | | |
| | | | (389 263 1602) | | | | |
| | | | (389 263 1302) | | | | |
| 7 | K21.03624 | 016 981 1205 | (012 981 9405) | 1 | GRUP MİLİ ARKA BİLYA | ROLLER BEARING | 60X130X33,8mm |



Original parts names, oem numbers, symbols and descriptions used in this catalogue are for reference purposes only.

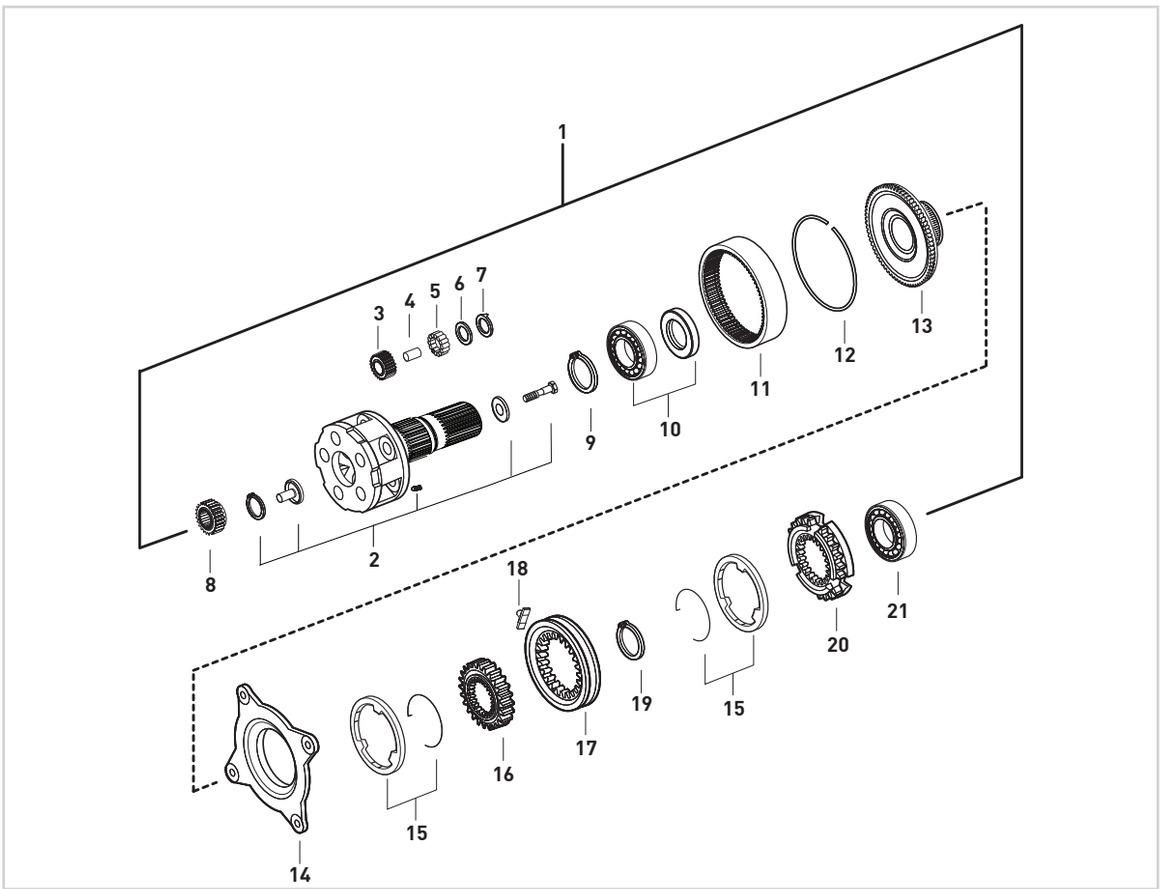


| Fig. | Kacmaz No. | Oem No | Oem Old No | Pcs. | Ürün Tanımı | Description | Sizes |
|---|---|---|---|---|---|---|---|
| 1 | K21.03554 | | | Kit | AĞIR SERİ ARKA AKTARMA KOMPLE | PLANETARY CARRIER COMPLETE | |
| 2 | K21.03180 | 946 260 3561 | (946 260 3661) | 1 | ŞANZIMAN HEYKELİ (BOŞ) | PLANETARY CARRIER (EMPTY) | |
| | | | (945 260 4561) | | | | |
| | | | (945 260 4461) | | | | |
| 3 | K21.03436 | 945 262 0006 | | 5 | HEYKEL KOZA DİŞLİSİ 28 DİŞ | PLANETARY GEAR 28 T. | |
| 4 | K21.03437 | 389 262 0407 | | 5 | HEYKEL KOZA DİŞLİ PİMİ | PLANETARY GEAR PIN | |
| 5 | K21.03816 | 000 981 4386 | (000 981 4186) | 125 | HEYKEL KOZA DİŞLİ TANE BİLYA | NEEDLE ROLLER | D5X39,6 |
| 6 | K21.04074 | 389 262 0162 | (389 262 6462) | 10 | HEYKEL KOZA DİŞLİ PULU | THRUST WASHER | |
| 7 | K21.04075 | 945 262 1162 | (945 262 0162) | 10 | HEYKEL KOZA DİŞLİ PULU | THRUST WASHER | |
| 8 | K21.03169 | 945 262 0909 | (389 262 0809) | 1 | GÜNEŞ DİŞLİ 25 DİŞ | SUN GEAR 25 T. | |
| | | | (389 262 0909) | | | | |
| 9 | K21.06864 | 000472 130000 | | 1 | ÇEMBER DİŞLİ BİLYA SEKMANI | RETAINING RING | 130X4mm |
| 10 | K21.03614 | 008 981 1325 | (004 981 8725) | 1 | ÇEMBER DİŞLİ BİLYASI | ROLLER BEARING | 90X130X14mm |
| 11 | K21.03449 | 945 262 1208 | (945 262 0808) | 1 | ÇEMBER DİŞLİ 85 DİŞ | RING WHEEL 85 T. | |
| 12 | K21.04253 | 389 262 0773 | | 1 | ÇEMBER DİŞLİ SEKMANI | LOCK RING | |
| 13 | K21.03442 | 930 262 0125 | (389 262 1425) | 1 | PLANET ÇAN DİŞLİ 85 DİŞ | CARRIER HUB 85 T. | |
| 14 | K21.03037 | 947 260 3036 | (947 260 0836) | 1 | TABLA SENKROMENÇ | FOLLOWER RING | |
| 15 | K21.03185 | 947 260 0945 | | 2 | AĞIR SERİ FRENLEME (Mo) | SYNCHRONIZING CONE / Mo | |
| 16 | K21.03079 | 389 262 4935 | (389 262 2035) | 1 | AĞIR SERİ YILDIZ DİŞLİ 73 DİŞ | SYNCHRONIZER HUB 73 T. | |
| 17 | K21.03033 | 945 262 6923 | (930 262 0623) | 1 | AĞIR SERİ HALKA | ENGAGING SLEEVE | |
| 18 | K21.03431 | 960 265 0049 | (947 265 0349) | 2 | AĞIR SERİ HİLAL PABUCU | SLIDING PAD | |
| 19 | K21.04356 | 000471 120000 | | 1 | AĞIR SERİ YILDIZ DİŞLİ SEKMANI | RETAINING RING | |
| 20 | K21.03186 | 945 262 3834 | | 1 | SERİ SENKROMENÇ | ENGAGING RING | |
| 21 | K21.03625 | 008 981 3025 | (008 981 5225) | 1 | ŞANZIMAN ARKA BİLYA | ROLLER BEARING | 80X150X28mm |



**Original parts names, oem numbers, symbols and descriptions used in this catalogue are for reference purposes only.**

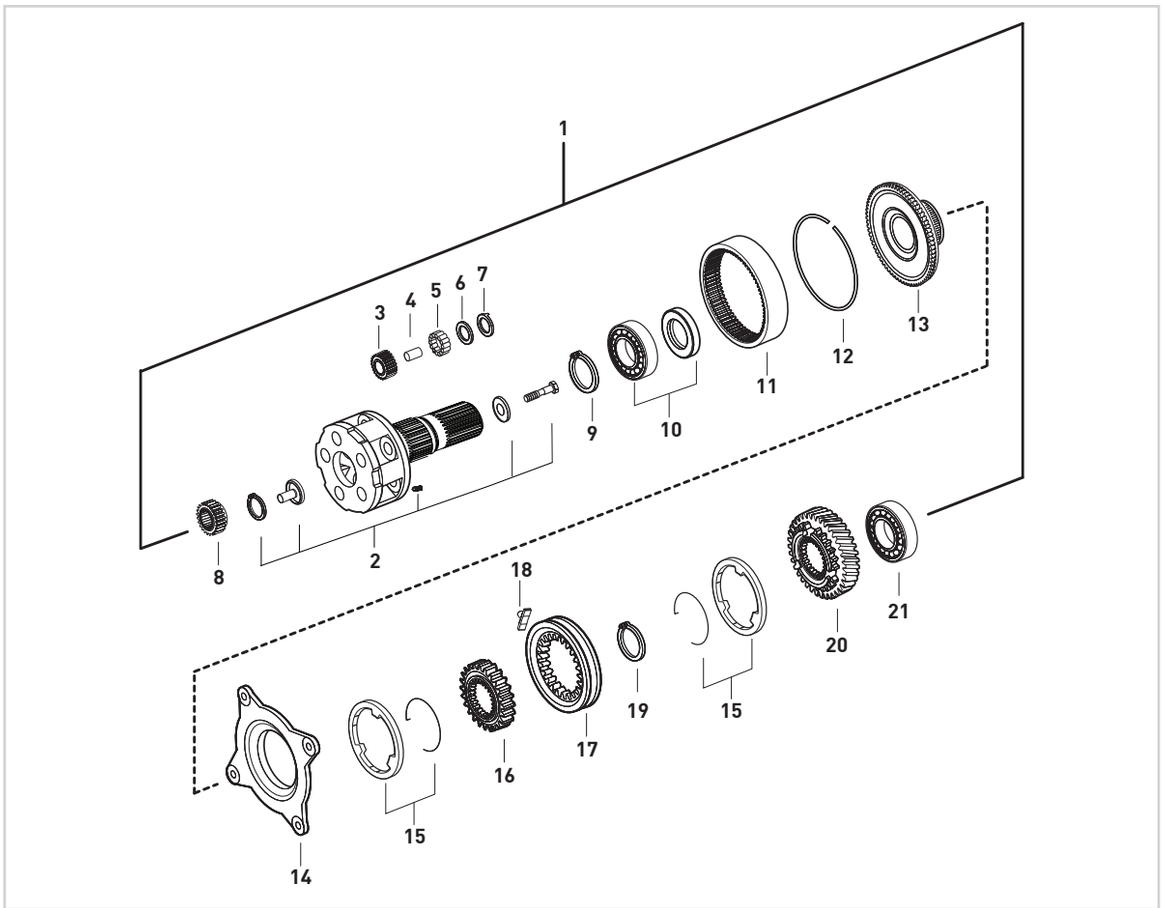


| Fig. | Kacmaz No. | Oem No | Oem Old No | Pcs. | Ürün Tanımı | Description | Sizes |
|---|---|---|---|---|---|---|---|
| 1 | K21.06384 | | | kit | AĞIR SERİ ARKA AKTARMA KOMPLE | PLANETARY CARRIER COMPLETE | |
| 2 | K21.03180 | 946 260 3561 | (946 260 3661) | 1 | ŞANZIMAN HEYKELİ (BOŞ) | PLANETARY CARRIER (EMPTY) | |
| | | | (945 260 4561) | | | | |
| | | | (945 260 4461) | | | | |
| 3 | K21.03436 | 945 262 0006 | | 5 | HEYKEL KOZA DİŞLİSİ 28 DİŞ | PLANETARY GEAR 28 T. | |
| 4 | K21.03437 | 389 262 0407 | | 5 | HEYKEL KOZA DİŞLİ PİMİ | PLANETARY GEAR PIN | |
| 5 | K21.03816 | 000 981 4186 | (000 981 4386) | 125 | HEYKEL KOZA DİŞLİ TANE BİLYA | NEEDLE ROLLER | D5X39,6 |
| 6 | K21.04074 | 389 262 0162 | (389 262 6462) | 10 | HEYKEL KOZA DİŞLİ PULU | THRUST WASHER | |
| 7 | K21.04075 | 945 262 1162 | (945 262 0162) | 10 | HEYKEL KOZA DİŞLİ PULU | THRUST WASHER | |
| 8 | K21.03169 | 945 262 0909 | (389 262 0809) | 1 | GÜNEŞ DİŞLİ 25 DİŞ | SUN GEAR 25 T. | |
| | | | (389 262 0909) | | | | |
| 9 | K21.06864 | 000472 130000 | | 1 | ÇEMBER DİŞLİ BİLYA SEKMANI | RETAINING RING | 130X4mm |
| 10 | K21.03614 | 008 981 1325 | (004 981 8725) | 1 | ÇEMBER DİŞLİ BİLYASI | ROLLER BEARING | 90X130X14mm |
| 11 | K21.03449 | 945 262 1208 | (945 262 0808) | 1 | ÇEMBER DİŞLİ 85 DİŞ | RING WHEEL 85 T. | |
| 12 | K21.04253 | 389 262 0773 | | 1 | ÇEMBER DİŞLİ SEKMANI | LOCK RING | |
| 13 | K21.03442 | 930 262 0125 | (389 262 1425) | 1 | PLANET ÇAN DİŞLİ 85 DİŞ | CARRIER HUB 85 T. | |
| 14 | K21.03037 | 947 260 3036 | (947 260 0836) | 1 | TABLA SENKROMENÇ | FOLLOWER RING | |
| 15 | K21.03185 | 947 260 0945 | | 2 | AĞIR SERİ FRENLEME (Mo) | SYNCHRONIZING CONE / Mo | |
| 16 | K21.03079 | 389 262 4935 | (389 262 2035) | 1 | AĞIR SERİ YILDIZ DİŞLİ 73 DİŞ | SYNCHRONIZER HUB 73 T. | |
| 17 | K21.03033 | 945 262 6923 | (930 262 0623) | 1 | AĞIR SERİ HALKA | ENGAGING SLEEVE | |
| 18 | K21.03431 | 960 265 0049 | (947 265 0349) | 2 | AĞIR SERİ HİLAL PABUCU | SLIDING PAD | |
| 19 | K21.04356 | 000471 120000 | | 1 | AĞIR SERİ YILDIZ DİŞLİ SEKMANI | RETAINING RING | |
| 20 | K21.03188 | 930 264 0320 | | 1 | RETARDER DİŞLİSİ 64 DİŞ | RETARDER GEAR 64 T. | |
| 21 | K21.03625 | 008 981 3025 | (008 981 5225) | 1 | ŞANZIMAN ARKA BİLYA | ROLLER BEARING | 80X150X28mm |



Original parts names, oem numbers, symbols and descriptions used in this catalogue are for reference purposes only.

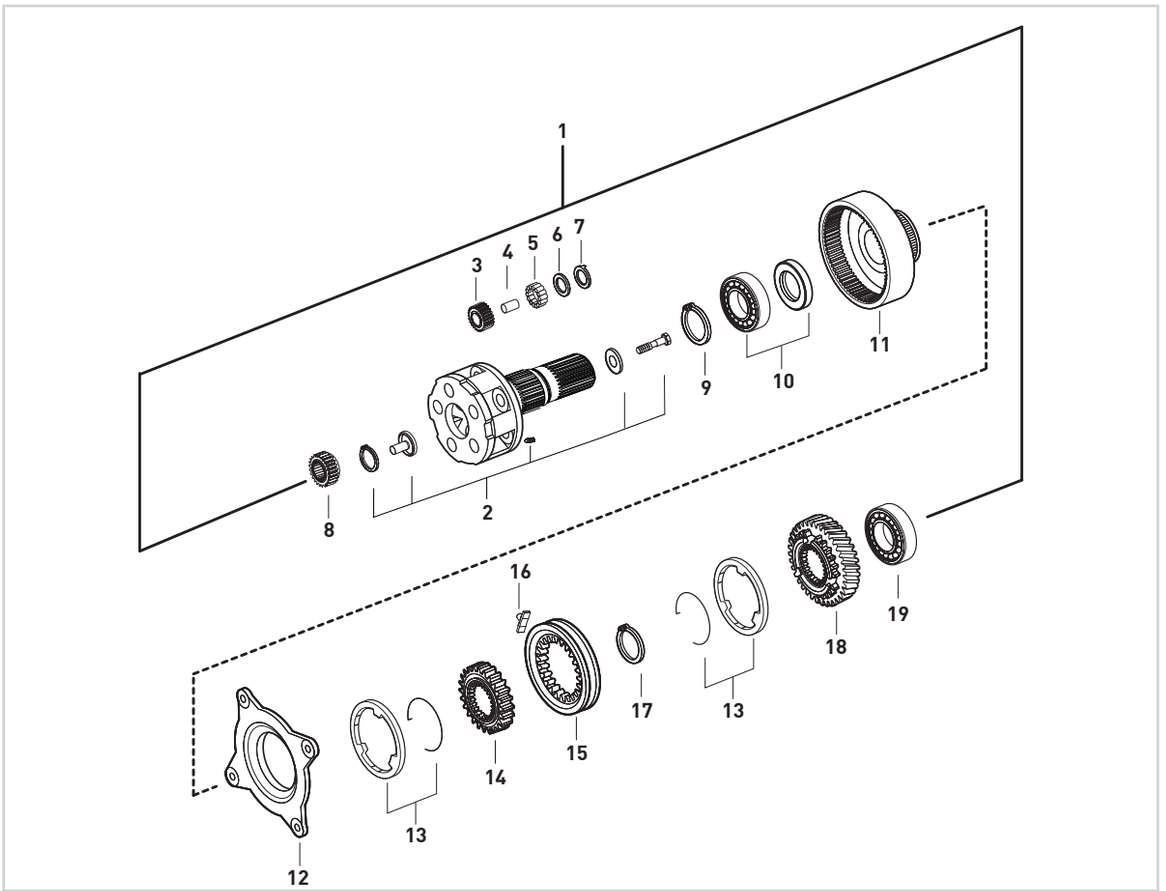


| Fig. | Kacmaz No. | Oem No | Oem Old No | Pcs. | Ürün Tanımı | Description | Sizes |
|---|---|---|---|---|---|---|---|
| 1 | K21.06383 | | | kit | AĞIR SERİ ARKA AKTARMA KOMPLE | PLANETARY CARRIER COMPLETE | |
| 2 | K21.03180 | 946 260 3561 | (946 260 3661) | 1 | ŞANZIMAN HEYKELİ (BOŞ) | PLANETARY CARRIER (EMPTY) | |
| | | | (945 260 4561) | | | | |
| | | | (945 260 4461) | | | | |
| 3 | K21.03436 | 945 262 0006 | | 5 | HEYKEL KOZA DİŞLİSİ 28 DİŞ | PLANETARY GEAR 28 T. | |
| 4 | K21.03437 | 389 262 0407 | | 5 | HEYKEL KOZA DİŞLİ PİMİ | PLANETARY GEAR PIN | |
| 5 | K21.03816 | 000 981 4186 | (000 981 4386) | 125 | HEYKEL KOZA DİŞLİ TANE BİLYA | NEEDLE ROLLER | D5X39,6 |
| 6 | K21.04074 | 389 262 0162 | (389 262 6462) | 10 | HEYKEL KOZA DİŞLİ PULU | THRUST WASHER | |
| 7 | K21.04075 | 389 262 1162 | (945 262 0162) | 10 | HEYKEL KOZA DİŞLİ PULU | THRUST WASHER | |
| 8 | K21.03169 | 945 262 0909 | (389 262 0809) | 1 | GÜNEŞ DİŞLİ 25 DİŞ | SUN GEAR 25 T. | |
| | | | (389 262 0909) | | | | |
| 9 | K21.06864 | 000472 130000 | | 1 | ÇEMBER DİŞLİ BİLYA SEKMANI | RETAINING RING | 130X4mm |
| 10 | K21.03614 | 008 981 1325 | (004 981 8725) | 1 | ÇEMBER DİŞLİ BİLYASI | ROLLER BEARING | 90X130X14mm |
| 11 | K21.03438 | 945 262 0108 | (389 262 0808) | 1 | ÇEMBER DİŞLİ 85 DİŞ | RING WHEEL 85 T. | |
| 12 | K21.03018 | 389 260 2036 | | 1 | TABLA SENKROMENÇ | FOLLOWER RING | |
| 13 | K21.03017 | 389 262 0537 | (389 262 0037) | 2 | AĞIR SERİ FRENLEME (Mo) | SYNCHRONIZING CONE / Mo | |
| 14 | K21.03079 | 389 262 4935 | (389 262 2035) | 1 | AĞIR SERİ YILDIZ DİŞLİ 73 DİŞ | SYNCHRONIZER HUB 73 T. | |
| 15 | K21.03028 | 945 262 6623 | (945 262 0823) | 1 | AĞIR SERİ HALKA 73 DİŞ | ENGAGING SLEEVE 73 T. | |
| | | | (389 262 1623) | | | | |
| | | | (389 262 3823) | | | | |
| 16 | K21.03406 | 389 265 2449 | (389 265 1249) | 2 | AĞIR SERİ HİLAL PABUCU | SLIDING PAD | |
| 17 | K21.04356 | 000471 120000 | | 1 | AĞIR SERİ YILDIZ DİŞLİ SEKMANI | RETAINING RING | |
| 18 | K21.06050 | 945 264 0130 | (389 264 0730) | 1 | RETARDER DİŞLİSİ 63 DİŞ | RETARDER GEAR 63 T. | |
| 19 | K21.03625 | 008 981 3025 | (008 981 5225) | 1 | ŞANZIMAN ARKA BİLYA | ROLLER BEARING | 80X150X28mm |



**Original parts names, oem numbers, symbols and descriptions used in this catalogue are for reference purposes only.**

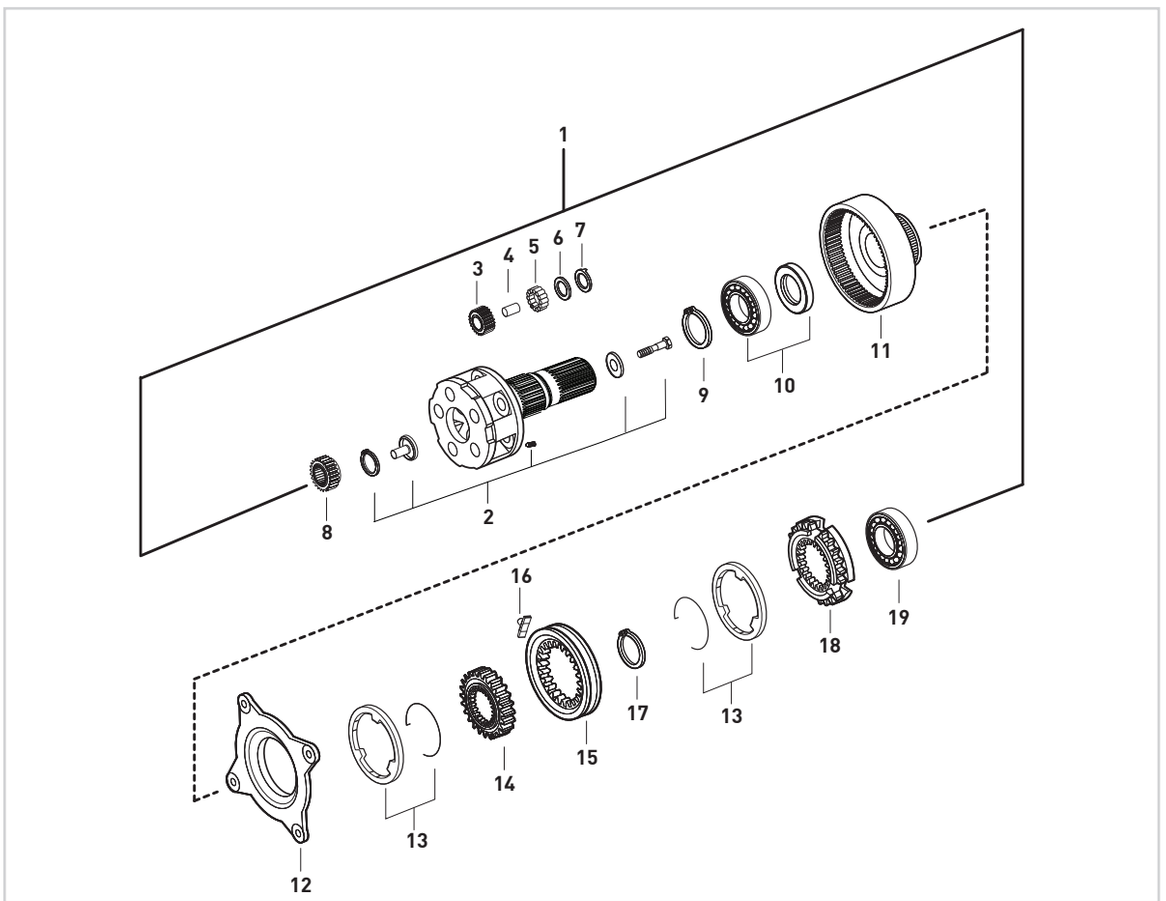


| Fig. | Kacmaz No. | Oem No | Oem Old No | Pcs. | Ürün Tanımı | Description | Sizes |
|---|---|---|---|---|---|---|---|
| 1 | K21.06382 | | | kit | AĞIR SERİ ARKA AKTARMA KOMPLE | PLANETARY CARRIER COMPLETE | |
| 2 | K21.03180 | 946 260 3561 | (946 260 3661) | 1 | ŞANZIMAN HEYKELİ (BOŞ) | PLANETARY CARRIER (EMPTY) | |
| | | | (945 260 4561) | | | | |
| | | | (945 260 4461) | | | | |
| 3 | K21.03436 | 945 262 0006 | | 5 | HEYKEL KOZA DİŞLİSİ 28 DİŞ | PLANETARY GEAR 28 T. | |
| 4 | K21.03437 | 389 262 0407 | | 5 | HEYKEL KOZA DİŞLİ PİMİ | PLANETARY GEAR PIN | |
| 5 | K21.03816 | 000 981 4186 | (000 981 4386) | 125 | HEYKEL KOZA DİŞLİ TANE BİLYA | NEEDLE ROLLER | D5X39,6 |
| 6 | K21.04074 | 389 262 0162 | (389 262 6462) | 10 | HEYKEL KOZA DİŞLİ PULU | THRUST WASHER | |
| 7 | K21.04075 | 389 262 1162 | (945 262 0162) | 10 | HEYKEL KOZA DİŞLİ PULU | THRUST WASHER | |
| 8 | K21.03169 | 945 262 0909 | (389 262 0809) | 1 | GÜNEŞ DİŞLİ 25 DİŞ | SUN GEAR 25 T. | |
| | | | (389 262 0909) | | | | |
| 9 | K21.06864 | 000472 130000 | | 1 | ÇEMBER DİŞLİ BİLYA SEKMANI | RETAINING RING | 130X4mm |
| 10 | K21.03614 | 008 981 1325 | (004 981 8725) | 1 | ÇEMBER DİŞLİ BİLYASI | ROLLER BEARING | 90X130X14mm |
| 11 | K21.03438 | 945 262 0108 | (389 262 0808) | 1 | ÇEMBER DİŞLİ 85 DİŞ | RING WHEEL 85 T. | |
| 12 | K21.03018 | 389 260 2036 | | 1 | TABLA SENKROMENÇ | FOLLOWER RING | |
| 13 | K21.03017 | 389 262 0537 | (389 262 0037) | 2 | AĞIR SERİ FRENLEME (Mo) | SYNCHRONIZING CONE / Mo | |
| 14 | K21.03079 | 389 262 4935 | (389 262 2035) | 1 | AĞIR SERİ YILDIZ DİŞLİ 73 DİŞ | SYNCHRONIZER HUB 73 T. | |
| 15 | K21.03028 | 945 262 6623 | (945 262 0823) | 1 | AĞIR SERİ SENK.HALKA 73 DİŞ | ENGAGING SLEEVE 73 T. | |
| | | | (389 262 1623) | | | | |
| | | | (389 262 3823) | | | | |
| 16 | K21.03406 | 389 265 2449 | (389 265 1249) | 2 | AĞIR SERİ HİLAL PABUCU | SLIDING PAD | |
| 17 | K21.04356 | 000471 120000 | | 1 | AĞIR SERİ YILDIZ DİŞLİ SEKMANI | RETAINING RING | |
| 18 | K21.03187 | 389 262 9234 | (945 262 1234) | 1 | SERİ SENKROMENÇ | ENGAGING RING | |
| 19 | K21.03625 | 008 981 3025 | (008 981 5225) | 1 | ŞANZIMAN ARKA BİLYA | ROLLER BEARING | 80X150X28mm |



Original parts names, oem numbers, symbols and descriptions used in this catalogue are for reference purposes only.

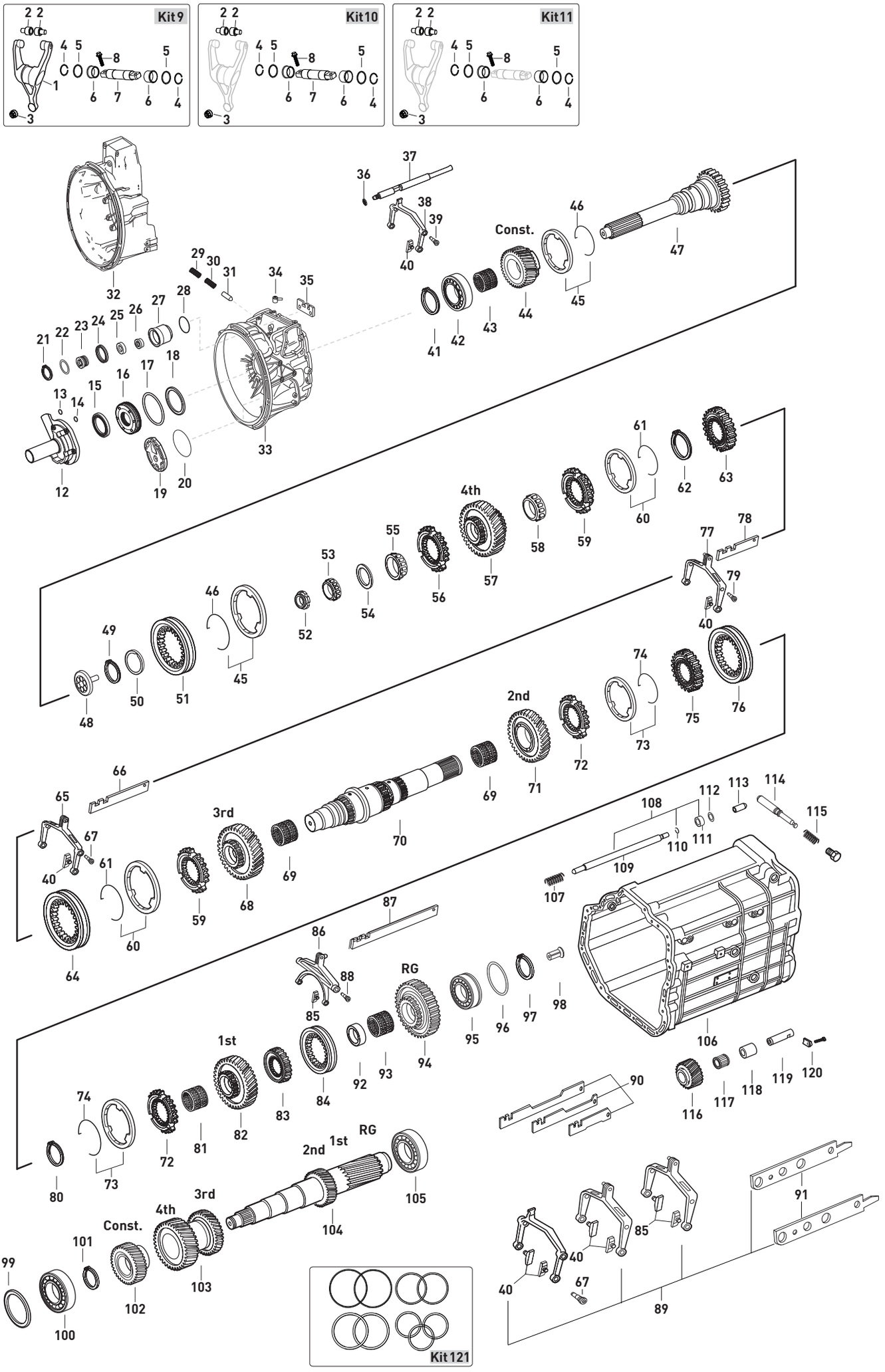




Original parts names, oem numbers, symbols and descriptions used in this catalogue are for reference purposes only.

| Fig. | Kacmaz No | Oem No | Oem Old No | Pcs. | Ürün Tanımı | Description | Sizes | Not | 715507 | 715508 |
|---|---|---|---|---|---|---|---|---|---|---|
| 1 | | 655 250 1513 | | 1 | DEBRİYAJ ÇATALI | RELEASE FORK | | | ♦ | |
| 2 | K21.07038 | 000 254 0017 | | 2 | DEBRİYAJ ÇATAL BURÇ VE PİMİ | CAM ROLLER | | | ♦ | |
| 2 | | 000 254 0217 | | 2 | DEBRİYAJ ÇATAL BURÇ VE PİMİ | CAM ROLLER | | | | ♦ |
| 3 | K21.07040 | 000 254 0335 | | 1 | DEBRİYAJ ÇATAL PLASTİK BURCU | PLASTIC BUSHING | | | ♦ | |
| 3 | | 000 254 0416 | | 1 | DEBRİYAJ ÇATAL PLASTİK BURCU | PLASTIC BUSHING | | | | ♦ |
| 4 | | 912009 035100 | | 2 | DEBRİYAJ ÇATAL MİL SEKMANI | RETAINING RING | | | ♦ | ♦ |
| 5 | | 000988 036100 | | 2 | DEBRİYAJ ÇATAL MİL AYAR PULU | WASHER | | | ♦ | ♦ |
| 6 | | 002 992 1501 | | 2 | DEBRİYAJ ÇATAL MİL BURCU | BUSHING | | | ♦ | |
| 6 | | 005 992 8601 | | 2 | DEBRİYAJ ÇATAL MİL BURCU | BUSHING | | | | ♦ |
| 7 | | 655 254 0206 | | 1 | DEBRİYAJ ÇATAL MİLİ | SHAFT | | | ♦ | ♦ |
| 8 | | 910105 012026 | | 2 | DEBRİYAJ ÇATAL MİL VİDASI | SCREW | M12X40mm | | ♦ | ♦ |
| 9 | K21.07036 | 655 250 1813 | | Kit | DEBRİYAJ ÇATALI KOMPLE | RELEASE FORK COMPLETE | | | ♦ | |
| 9 | K21.97036 | 655 250 1813-S | | Kit | DEB.ÇATALI KOMPLE (BİLYALI TİP) | RELEASE FORK COMPLETE | | WITH BEARING | ♦ | |
| 9 | | 656 250 2013 | | Kit | DEBRİYAJ ÇATALI KOMPLE | RELEASE FORK COMPLETE | | | | ♦ |
| 10 | K21.07037 | | | Kit | DEBRİYAJ ÇATALI TAMİR TAKIMI | RELEASE FORK REPAIR KIT | | | ♦ | |
| 11 | K21.07039 | | | Kit | DEBRİYAJ ÇATALI TAMİR TK.MİLSİZ | RELEASE FORK REPAIR KIT | | W/OUT SHAFT | ♦ | |
| 12 | K21.03429 | 945 261 1118 | (945 261 0118) | 1 | PRİZDİREK KEÇE KAPAĞI | COVER | | | ♦ | ♦ |
| | | | (945 261 0818) | | | | | | | |
| 13 | K21.06637 | 019 997 8348 | (020 997 7948) | 1 | PRİZDİREK KEÇE KAPAK ORİNGİ | O-RING | 14X4mm | | ♦ | ♦ |
| 14 | K21.06636 | 015 997 4048 | (020 997 8748) | 1 | PRİZDİREK KEÇE KAPAK ORİNGİ | O-RING | 5X3mm | | ♦ | ♦ |
| 15 | K21.03509 | 019 997 0547 | (023 997 7847) | 1 | PRİZDİREK KEÇESİ | OIL SEAL | 56X72X8mm | | ♦ | ♦ |
| | | | (019 997 0647) | | | | | | | |
| | | | (022 997 8547) | | | | | | | |
| 16 | K21.06038 | 389 261 0665 | (389 261 0765) | 1 | YAĞ TUTUCU DİSK | OIL BAFFLE | 75X16mm | | ♦ | ♦ |
| | | | (389 261 0865) | | | | | | | |
| 17 | K21.06635 | 020 997 7848 | | 1 | PRİZDİREK KEÇE KAPAK ORİNGİ | O-RING | 138X3mm | | ♦ | ♦ |
| 18 | K21.04162 | 389 262 4152 | (389 262 0955) | 1 | PRİZDİREK AYAR RAYNELİ | THRUST WASHER | 0,10mm | | ♦ | ♦ |
| 18 | K21.04243 | 389 262 0855 | | 1 | PRİZDİREK AYAR RAYNELİ | THRUST WASHER | 0,15mm | | ♦ | ♦ |
| 18 | K21.04151 | 389 262 0755 | | 1 | PRİZDİREK AYAR RAYNELİ | THRUST WASHER | 0,20mm | | ♦ | ♦ |
| 18 | K21.06715 | 389 262 3055 | | 1 | PRİZDİREK AYAR RAYNELİ | THRUST WASHER | 0,25mm | | ♦ | ♦ |
| 18 | K21.04221 | 389 262 3255 | | 1 | PRİZDİREK AYAR RAYNELİ | THRUST WASHER | 0,31mm | | ♦ | ♦ |
| 18 | K21.04163 | 389 262 3555 | (389 262 0655) | 1 | PRİZDİREK AYAR RAYNELİ | THRUST WASHER | 0,40mm | | ♦ | ♦ |
| | | | (389 262 4452) | | | | | | | |
| 18 | K21.04164 | 389 262 3755 | (389 262 1954) | 1 | PRİZDİREK AYAR RAYNELİ | THRUST WASHER | 0,46mm | | ♦ | ♦ |
| 18 | K21.04246 | 389 262 3855 | | 1 | PRİZDİREK AYAR RAYNELİ | THRUST WASHER | 0,49mm | | ♦ | ♦ |
| 18 | K21.04250 | 389 262 4055 | (389 262 0155) | 1 | PRİZDİREK AYAR RAYNELİ | THRUST WASHER | 0,55mm | | ♦ | ♦ |
| | | | (389 262 2154) | | | | | | | |
| 18 | K21.04167 | 389 262 4255 | (389 262 2254) | 1 | PRİZDİREK AYAR RAYNELİ | THRUST WASHER | 0,61mm | | ♦ | ♦ |
| 18 | K21.04168 | 389 262 4355 | (389 262 2354) | 1 | PRİZDİREK AYAR RAYNELİ | THRUST WASHER | 0,64mm | | ♦ | ♦ |
| 18 | K21.04169 | 389 262 4555 | (389 262 2454) | 1 | PRİZDİREK AYAR RAYNELİ | THRUST WASHER | 0,70mm | | ♦ | ♦ |
| 18 | K21.04170 | 389 262 4755 | (389 262 2554) | 1 | PRİZDİREK AYAR RAYNELİ | THRUST WASHER | 0,76mm | | ♦ | ♦ |
| 18 | K21.04281 | 389 262 4855 | (389 262 0555) | 1 | PRİZDİREK AYAR RAYNELİ | THRUST WASHER | 0,79mm | | ♦ | ♦ |
| 18 | K21.04282 | 389 262 5555 | | 1 | PRİZDİREK AYAR RAYNELİ | THRUST WASHER | 1,00mm | | ♦ | ♦ |
| 18 | K21.04171 | 389 262 9654 | (389 262 2654) | 1 | PRİZDİREK AYAR RAYNELİ | THRUST WASHER | 2,00mm | | ♦ | ♦ |
| 19 | | 976 261 1833 | (976 261 1733) | 1 | GRUP MİLİ ÖN BİLYA KAPAĞI | COVER | | | ♦ | ♦ |
| | | | (976 261 1633) | | | | | | | |
| 20 | K21.06533 | 028 997 2348 | (004 997 2248) | 1 | GRUP MİLİ BİLYA KAPAK ORİNGİ | O-RING | 100X3mm | | ♦ | ♦ |
| 21 | | 006 994 4241 | (000472 065001) | 1 | TAKVİYE PİSTON SEKMANI | RETAINING RING | 65X2,5mm | | ♦ | ♦ |
| 22 | K21.04233 | 389 262 2555 | | 1 | TAKVİYE SİLİNDİR PULU | SPACER WASHER | 0,70mm | | ♦ | ♦ |
| 22 | K21.04234 | 389 262 2655 | | 1 | TAKVİYE SİLİNDİR PULU | SPACER WASHER | 0,90mm | | ♦ | ♦ |
| 22 | K21.04112 | 389 262 3254 | | 1 | TAKVİYE SİLİNDİR PULU | SPACER WASHER | 1,05mm | | ♦ | ♦ |
| 22 | K21.04111 | 389 262 3354 | | 1 | TAKVİYE SİLİNDİR PULU | SPACER WASHER | 1,10mm | | ♦ | ♦ |
| 22 | K21.04109 | 389 262 3554 | | 1 | TAKVİYE SİLİNDİR PULU | SPACER WASHER | 1,20mm | | ♦ | ♦ |

NOTES :
Parts encoded alphabetic and numaric are used together.

NOTLAR :
Alfabetik ve rakam ile kodlanan parçalar birlikte kullanılır.





Original parts names, oem numbers, symbols and descriptions used in this catalogue are for reference purposes only.

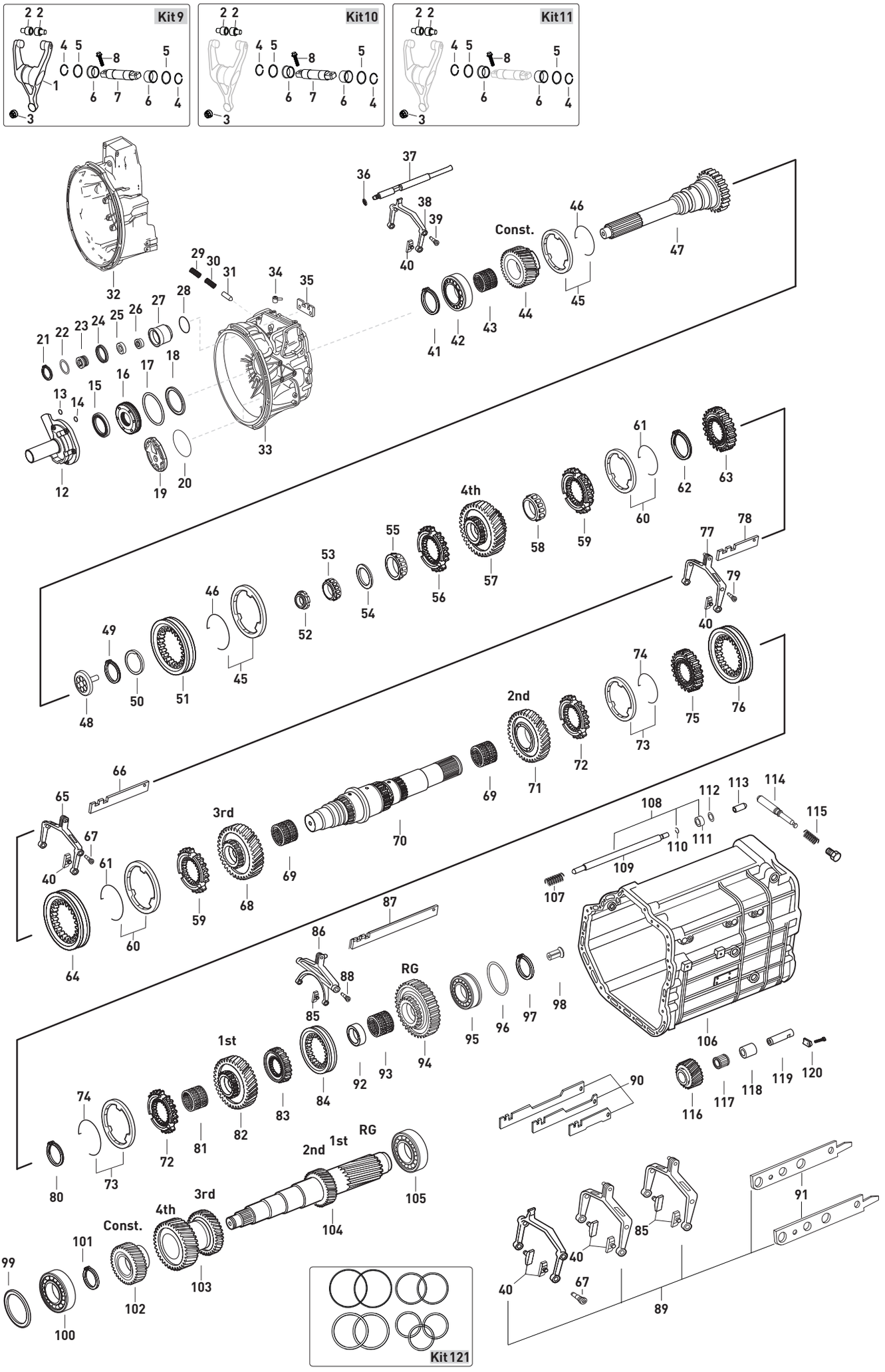




Original parts names, oem numbers, symbols and descriptions used in this catalogue are for reference purposes only.

| Fig. | Kacmaz No | Oem No | Oem Old No | Pcs. | Ürün Tanımı | Description | Sizes | Not | 715507 | 715508 |
|---|---|---|---|---|---|---|---|---|---|---|
| 22 | K21.04105 | 389 262 2052 | | 1 | TAKVİYE SİLİNDİR PULU | SPACER WASHER | 1,40mm | | ♦ | ♦ |
| 22 | K21.04093 | 389 262 2355 | | 1 | TAKVİYE SİLİNDİR PULU | SPACER WASHER | 1,79mm | | ♦ | ♦ |
| 22 | K21.04025 | 389 262 3252 | | 1 | TAKVİYE SİLİNDİR PULU | SPACER WASHER | 2,00mm | | ♦ | ♦ |
| 22 | K21.04024 | 389 262 3352 | | 1 | TAKVİYE SİLİNDİR PULU | SPACER WASHER | 2,50mm | | ♦ | ♦ |
| 23 | K21.06994 | 945 267 0218 | (387 267 0918) | 1 | TAKVİYE MİL PİSTONU | PISTON | | | ♦ | ♦ |
| | | | (387 267 0618) | | | | | | | |
| 24 | K21.03524 | 006 997 6447 | (020 997 6647) | 1 | TAKVİYE HAVA KEÇESİ | OIL SEAL | 41X48X11,5mm | | ♦ | ♦ |
| | | | (012 997 3347) | | | | | | | |
| 25 | K21.04178 | 387 267 0650 | (387 267 0250) | 1 | TAKVİYE SİLİNDİR BURCU | BUSHING | 34X22X8mm | | ♦ | ♦ |
| 26 | K21.03523 | 000 267 0197 | (000 267 0397) | 1 | TAKVİYE HİLAL MİL KEÇESİ | OIL SEAL | 22X32X8mm | | ♦ | ♦ |
| 27 | K21.06036 | 945 267 0819 | (945 267 0119) | 1 | TAKVİYE SİLİNDİR GÖVDESİ | CYLINDER | | (A) | ♦ | ♦ |
| | | | (945 267 0719) | | | | | | | |
| | | | (945 267 0019) | | | | | | | |
| 27 | K21.06056 | 945 267 0619 | (945 267 0219) | 1 | TAKVİYE SİLİNDİR GÖVDESİ | CYLINDER | | (B) | ♦ | |
| 28 | K21.06534 | 022 997 4248 | | 1 | TAKVİYE SİLİNDİR ORİNGİ | O-RING | 55,6X3mm | (A) | ♦ | ♦ |
| 28 | | 016 997 6648 | | 1 | TAKVİYE SİLİNDİR ORİNGİ | O-RING | | (B) | ♦ | |
| 29 | K21.06015 | 387 993 4501 | | 1 | ŞANZ.TAKVİYE KİLİT FİŞEK YAYI | SPRING | 6,2X63mm | | ♦ | ♦ |
| 30 | K21.03500 | 387 993 4401 | (387 993 2501) | 1 | KİLİT YAYI | SPRING | 9,8X63,3mm | | ♦ | ♦ |
| 31 | K21.03492 | 389 267 1174 | (387 267 0074) | 1 | KİLİT FİŞEĞİ | PIN | | | ♦ | ♦ |
| 32 | | 942 250 0105 | | 1 | ŞANZIMAN ÖN GÖVDE | HOUSING | | (PTO) | ♦ | |
| 33 | K21.06526 | 945 260 8412 | (945 261 7501) | 1 | ŞANZIMAN ÖN GÖVDE | HOUSING | | | ♦ | |
| 33 | | 960 260 6912 | | 1 | ŞANZIMAN ÖN GÖVDE | HOUSING | | | | ♦ |
| 34 | K21.06529 | 437 261 0082 | (945 261 0082) | 1 | ŞANZIMAN HAVALANDIRMA | CAP | | | ♦ | ♦ |
| 35 | K21.06509 | 945 267 0459 | | 1 | VİTES HİLAL ÇITA KİLİTLEMESİ | BRACKET | | | ♦ | ♦ |
| 36 | K21.04160 | 387 263 2652 | | 1 | TAKVİYE HİLAL MİL PULU | SPACER WASHER | 0,20mm | | ♦ | ♦ |
| 36 | K21.04161 | 387 263 2752 | | 1 | TAKVİYE HİLAL MİL PULU | SPACER WASHER | 0,40mm | | ♦ | ♦ |
| 36 | | 387 263 2852 | | 1 | TAKVİYE HİLAL MİL PULU | SPACER WASHER | 0,60mm | | ♦ | ♦ |
| 36 | | 387 263 3052 | | 1 | TAKVİYE HİLAL MİL PULU | SPACER WASHER | 1,00mm | | ♦ | ♦ |
| 37 | K21.07003 | 945 267 0017 | | 1 | TAKVİYE HİLAL MİLİ | GEAR SHIFT RAIL | | | ♦ | ♦ |
| 38 | K21.06410 | 945 265 0001 | | 1 | TAKVİYE HİLALİ | GEAR SHIFT FORK | | | ♦ | ♦ |
| 39 | K21.04307 | 960 265 0774 | (945 265 1274) | 2 | HİLAL CİVATASI | PIN | | | ♦ | ♦ |
| | | | (945 265 2974) | | | | | | | |
| | | | (945 265 2774) | | | | | | | |
| 40 | K21.03431 | 960 265 0049 | (947 265 0349) | 6 | 1./2./3./4.VİTES HİLAL PABUCU | SLIDING PAD | | | ♦ | ♦ |
| | | | (389 265 2749) | | | | | | | |
| 41 | K21.04347 | 387 262 8673 | | 1 | PRİZDİREK ÖN BİLYA SEKMANI | RETAINING RING | 3,15mm | | ♦ | ♦ |
| 41 | K21.04346 | 387 262 8773 | | 1 | PRİZDİREK ÖN BİLYA SEKMANI | RETAINING RING | 3,20mm | | ♦ | ♦ |
| 41 | K21.07015 | 387 262 8873 | | 1 | PRİZDİREK ÖN BİLYA SEKMANI | RETAINING RING | 3,25mm | | ♦ | ♦ |
| 41 | K21.04348 | 387 262 8973 | | 1 | PRİZDİREK ÖN BİLYA SEKMANI | RETAINING RING | 3,30mm | | ♦ | ♦ |
| 41 | K21.07016 | 387 262 9073 | | 1 | PRİZDİREK ÖN BİLYA SEKMANI | RETAINING RING | 3,35mm | | ♦ | ♦ |
| 41 | K21.04349 | 387 262 9173 | | 1 | PRİZDİREK ÖN BİLYA SEKMANI | RETAINING RING | 3,40mm | | ♦ | ♦ |
| 41 | K21.07017 | 387 262 9273 | | 1 | PRİZDİREK ÖN BİLYA SEKMANI | RETAINING RING | 3,45mm | | ♦ | ♦ |
| 41 | K21.04350 | 387 262 9373 | | 1 | PRİZDİREK ÖN BİLYA SEKMANI | RETAINING RING | 3,50mm | | ♦ | ♦ |
| 42 | K21.03618 | 011 981 1305 | (014 981 9005) | 1 | PRİZDİREK ÖN BİLYA | ROLLER BEARING | 75X140X34,25mm | | ♦ | ♦ |
| | | | (008 981 8605) | | | | | | | |
| | | | (008 981 2605) | | | | | | | |
| 43 | K21.03815 | 016 981 0010 | (018 981 8710) | 1 | TAKVİYE DİŞLİ MASURA BİLYA | NEEDLE CAGE | 89X97X40mm | | ♦ | ♦ |
| 44 | K21.03030 | 945 262 4110 | (945 262 1610) | 1 | TAKVİYE DİŞLİSİ 32 DİŞ | CONSTANT GEAR 32 T. | | (1) | ♦ | |
| | | | (945 262 0010) | | | | | | | |
| | | | (389 262 6310) | | | | | | | |
| | | | (945 262 1110) | | | | | | | |
| 44 | K21.03130 | 945 262 9817 | (945 262 5417) | 1 | TAKVİYE DİŞLİSİ 32 DİŞ | CONSTANT GEAR 32 T. | | (2) | ♦ | ♦ |
| | | | (945 262 7517) | | | | | | | |

NOTES :
Parts encoded alphabetic and numaric are used together.

NOTLAR :
Alfabetik ve rakam ile kodlanan parçalar birlikte kullanılır.





Original parts names, oem numbers, symbols and descriptions used in this catalogue are for reference purposes only.

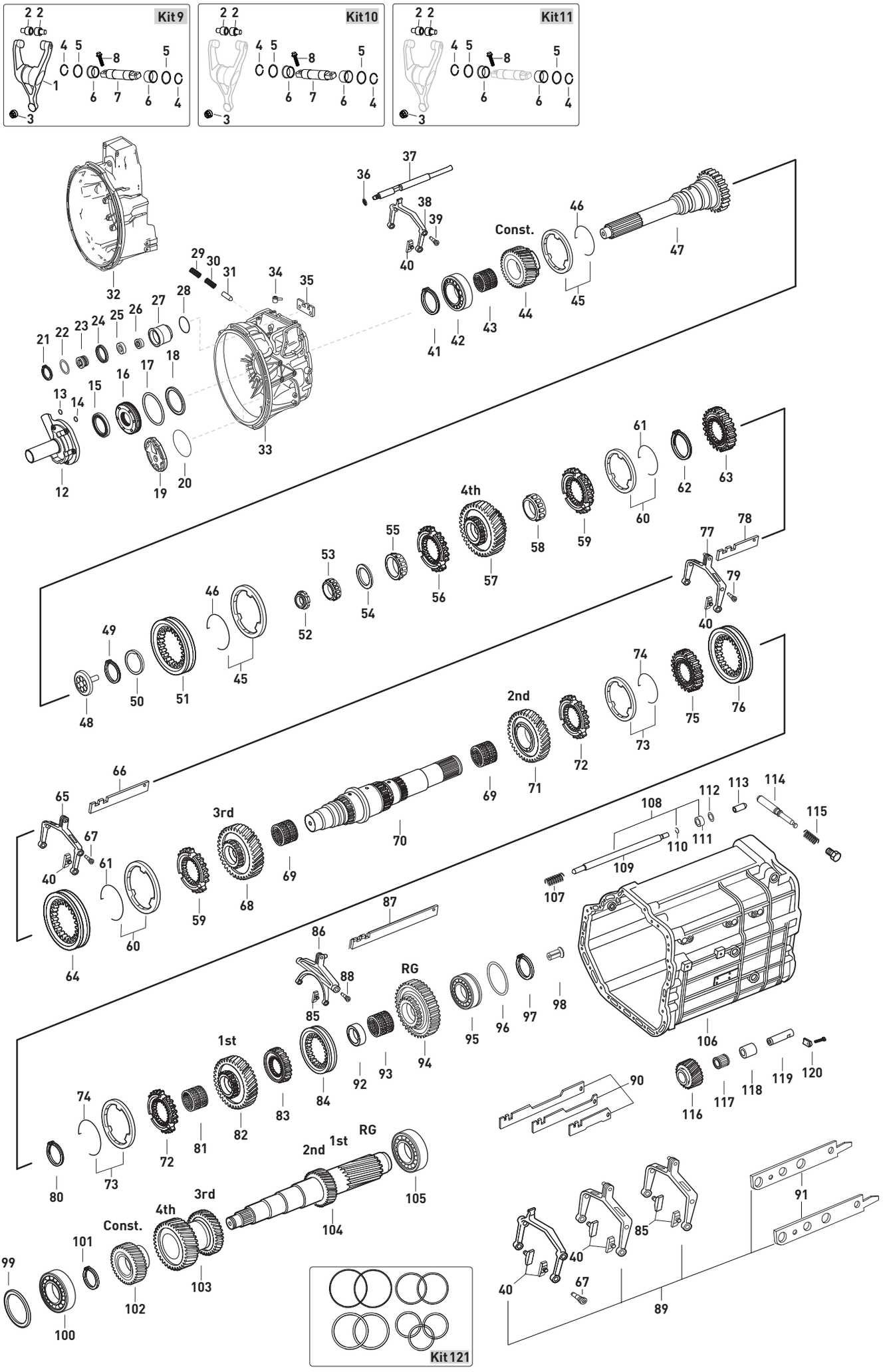




Original parts names, oem numbers, symbols and descriptions used in this catalogue are for reference purposes only.

| Fig. | Kacmaz No | Oem No | Oem Old No | Pcs. | Ürün Tanımı | Description | Sizes | Not | 715507 | 715508 |
|---|---|---|---|---|---|---|---|---|---|---|
| 45 | K21.03015 | 389 262 0637 | (387 262 0837) | 2 | TAKVİYE FRENLEME (Mo) | SYNCHRONIZING CONE / Mo | | (1) | ♦ | |
| | | | (389 262 1037) | | | | | | | |
| 45 | K21.03401 | 945 260 0450 | | 2 | TAKVİYE FRENLEME (C) | SYNCHRONIZING CONE / C | | (1) | ♦ | |
| 45 | K21.03136 | 945 260 2245 | (946 262 6337) | 2 | TAKVİYE FRENLEME (Mo) | SYNCHRONIZING CONE / Mo | | (2) | ♦ | ♦ |
| 45 | K21.06274 | 947 260 2845 | (947 260 0545) | 2 | TAKVİYE FRENLEME (C) | SYNCHRONIZING CONE / C | | (2) | ♦ | ♦ |
| 46 | K21.03044 | 387 262 1093 | (387 262 0693) | 2 | FRENLEME TELİ | SPRING | | | ♦ | ♦ |
| | | | (960 262 1393) | | | | | | | |
| 47 | K21.03142 | 389 262 8201 | (945 262 0103) | 1 | PRİZDİREK 60 DİŞ | INPUT SHAFT 60 T. | | | ♦ | ♦ |
| | | | (389 262 6201) | | | | | | | |
| 47 | K21.03138 | 945 262 0803 | (945 262 6303) | 1 | PRİZDİREK 60 DİŞ | INPUT SHAFT 60 T. | | (PTO) | ♦ | |
| 48 | K21.04001 | 976 269 0034 | (960 269 0434) | 1 | PRİZDİREK YAĞ PİPETİ | OIL COLLECTOR | | | ♦ | ♦ |
| 49 | K21.04002 | 000 994 9841 | | 1 | PRİZDİREK YAĞ PİPET SEKMANI | RETAINING RING | | | ♦ | ♦ |
| 50 | K21.03510 | 001 262 0362 | (000 262 8762) | 1 | PRİZDİREK ARKA KEÇE | OIL SEAL | 78,5X105X7mm | | ♦ | ♦ |
| | | | (000 262 9162) | | | | | | | |
| 51 | K21.03002 | 945 262 2823 | (945 262 0323) | 1 | TAKVİYE HALKA | ENGAGING SLEEVE | | (1) | ♦ | |
| | | | (945 262 0623) | | | | | | | |
| | | | (389 262 4123) | | | | | | | |
| | | | (389 262 2723) | | | | | | | |
| 51 | K21.03137 | 945 262 6823 | (945 262 6423) | 1 | TAKVİYE HALKA | ENGAGING SLEEVE | | (2) | ♦ | ♦ |
| 52 | K21.03432 | 945 990 0250 | (945 990 0150) | 1 | KAMALI MİL SOMUNU | NUT | M30X1,5 | | ♦ | ♦ |
| 53 | K21.03619 | 015 981 1605 | (013 981 1105) | 1 | KAMALI MİL UÇ BİLYA | ROLLER BEARING | 39,69X40,39mm | | ♦ | ♦ |
| 54 | K21.04024 | 389 262 3352 | | 1 | 4.VİTES ÖN BİLYA AYAR PULU | THRUST WASHER | 2,50mm | | ♦ | ♦ |
| 54 | K21.04025 | 389 262 3252 | | 1 | 4.VİTES ÖN BİLYA AYAR PULU | THRUST WASHER | 2,00mm | | ♦ | ♦ |
| 54 | K21.04026 | 389 262 3152 | | 1 | 4.VİTES ÖN BİLYA AYAR PULU | THRUST WASHER | 1,95mm | | ♦ | ♦ |
| 54 | K21.04027 | 389 262 3052 | | 1 | 4.VİTES ÖN BİLYA AYAR PULU | THRUST WASHER | 1,90mm | | ♦ | ♦ |
| 54 | K21.04028 | 389 262 2952 | | 1 | 4.VİTES ÖN BİLYA AYAR PULU | THRUST WASHER | 1,85mm | | ♦ | ♦ |
| 54 | K21.04092 | 389 262 2455 | | 1 | 4.VİTES ÖN BİLYA AYAR PULU | THRUST WASHER | 1,82mm | | ♦ | ♦ |
| 54 | K21.04093 | 389 262 2355 | | 1 | 4.VİTES ÖN BİLYA AYAR PULU | THRUST WASHER | 1,79mm | | ♦ | ♦ |
| 54 | K21.04094 | 389 262 2255 | | 1 | 4.VİTES ÖN BİLYA AYAR PULU | THRUST WASHER | 1,76mm | | ♦ | ♦ |
| 54 | K21.04095 | 389 262 2155 | | 1 | 4.VİTES ÖN BİLYA AYAR PULU | THRUST WASHER | 1,73mm | | ♦ | ♦ |
| 54 | K21.04096 | 389 262 2055 | | 1 | 4.VİTES ÖN BİLYA AYAR PULU | THRUST WASHER | 1,67mm | | ♦ | ♦ |
| 54 | K21.04097 | 389 262 1955 | | 1 | 4.VİTES ÖN BİLYA AYAR PULU | THRUST WASHER | 1,64mm | | ♦ | ♦ |
| 54 | K21.04098 | 389 262 1855 | | 1 | 4.VİTES ÖN BİLYA AYAR PULU | THRUST WASHER | 1,61mm | | ♦ | ♦ |
| 54 | K21.04099 | 389 262 1755 | | 1 | 4.VİTES ÖN BİLYA AYAR PULU | THRUST WASHER | 1,58mm | | ♦ | ♦ |
| 54 | K21.04100 | 389 262 2352 | | 1 | 4.VİTES ÖN BİLYA AYAR PULU | THRUST WASHER | 1,55mm | | ♦ | ♦ |
| 54 | K21.04101 | 389 262 1655 | | 1 | 4.VİTES ÖN BİLYA AYAR PULU | THRUST WASHER | 1,52mm | | ♦ | ♦ |
| 54 | K21.04102 | 389 262 1555 | | 1 | 4.VİTES ÖN BİLYA AYAR PULU | THRUST WASHER | 1,49mm | | ♦ | ♦ |
| 54 | K21.04103 | 389 262 1455 | | 1 | 4.VİTES ÖN BİLYA AYAR PULU | THRUST WASHER | 1,46mm | | ♦ | ♦ |
| 54 | K21.04104 | 389 262 1355 | | 1 | 4.VİTES ÖN BİLYA AYAR PULU | THRUST WASHER | 1,43mm | | ♦ | ♦ |
| 54 | K21.04105 | 389 262 2052 | | 1 | 4.VİTES ÖN BİLYA AYAR PULU | THRUST WASHER | 1,40mm | | ♦ | ♦ |
| 54 | K21.04106 | 389 262 1952 | | 1 | 4.VİTES ÖN BİLYA AYAR PULU | THRUST WASHER | 1,35mm | | ♦ | ♦ |
| 54 | K21.04107 | 389 262 2754 | | 1 | 4.VİTES ÖN BİLYA AYAR PULU | THRUST WASHER | 1,30mm | | ♦ | ♦ |
| 54 | K21.04108 | 389 262 3654 | | 1 | 4.VİTES ÖN BİLYA AYAR PULU | THRUST WASHER | 1,25mm | | ♦ | ♦ |
| 54 | K21.04109 | 389 262 3554 | | 1 | 4.VİTES ÖN BİLYA AYAR PULU | THRUST WASHER | 1,20mm | | ♦ | ♦ |
| 54 | K21.04110 | 389 262 3454 | | 1 | 4.VİTES ÖN BİLYA AYAR PULU | THRUST WASHER | 1,15mm | | ♦ | ♦ |
| 54 | K21.04111 | 389 262 3354 | | 1 | 4.VİTES ÖN BİLYA AYAR PULU | THRUST WASHER | 1,10mm | | ♦ | ♦ |
| 54 | K21.04112 | 389 262 3254 | | 1 | 4.VİTES ÖN BİLYA AYAR PULU | THRUST WASHER | 1,05mm | | ♦ | ♦ |
| 54 | K21.04113 | 389 262 2854 | | 1 | 4.VİTES ÖN BİLYA AYAR PULU | THRUST WASHER | 0,50mm | | ♦ | ♦ |
| 54 | K21.94113 | | | 1 | 4.VİTES ÖN BİLYA AYAR PULU | THRUST WASHER | 0,40mm | | ♦ | ♦ |
| 54 | K21.84113 | | | 1 | 4.VİTES ÖN BİLYA AYAR PULU | THRUST WASHER | 0,30mm | | ♦ | ♦ |
| 54 | K21.74113 | | | 1 | 4.VİTES ÖN BİLYA AYAR PULU | THRUST WASHER | 0,20mm | | ♦ | ♦ |
| 54 | K21.64113 | | | 1 | 4.VİTES ÖN BİLYA AYAR PULU | THRUST WASHER | 0,10mm | | ♦ | ♦ |
| 55 | K21.03629 | 015 981 7605 | (015 981 2005) | 1 | 4.VİTES DİŞLİSİ ÖN BİLYA | ROLLER BEARING | 50X41mm | | ♦ | ♦ |

NOTES :
Parts encoded alphabetic and numaric are used together.

NOTLAR :
Alfabetik ve rakam ile kodlanan parçalar birlikte kullanılır.





Original parts names, oem numbers, symbols and descriptions used in this catalogue are for reference purposes only.

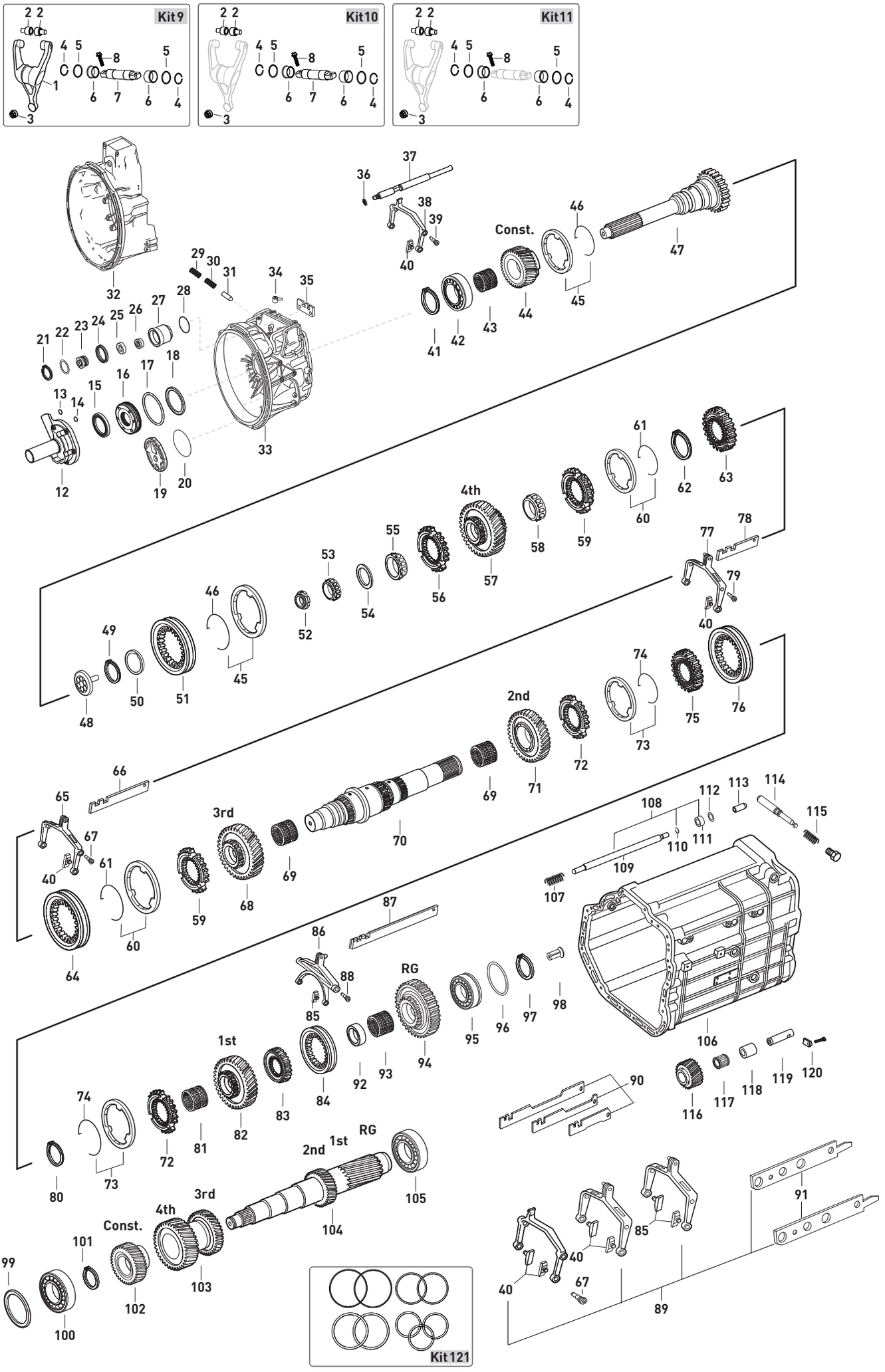




Original parts names, oem numbers, symbols and descriptions used in this catalogue are for reference purposes only.

| Fig. | Kacmaz No | Oem No | Oem Old No | Pcs. | Ürün Tanımı | Description | Sizes | Not | 715507 | 715508 |
|---|---|---|---|---|---|---|---|---|---|---|
| 56 | K21.03024 | 389 262 5434 | (945 262 0334) | 1 | TAKVİYE SENKROMENÇ | ENGAGING RING | | (1) | ♦ | |
| | | | (945 262 0134) | | | | | | | |
| 56 | K21.03147 | 945 262 7734 | (945 262 3634) | 1 | TAKVİYE SENKROMENÇ | ENGAGING RING | | (2) | ♦ | ♦ |
| 57 | K21.03026 | 945 262 8810 | (945 262 9310) | 1 | 4.VİTES DİŞLİSİ 29 DİŞ | GEAR 4th 29 T. | | | ♦ | ♦ |
| | | | (945 262 9210) | | | | | | | |
| | | | (945 262 9117) | | | | | | | |
| | | | (945 262 0510) | | | | | | | |
| 58 | K21.03631 | 015 981 7705 | (014 981 1605) | 1 | 4.VİTES DİŞLİSİ ARKA BİLYA | ROLLER BEARING | 55X23mm | | ♦ | ♦ |
| | | | (017 981 5705) | | | | | | | |
| 59 | K21.03027 | 945 262 0534 | (389 262 5034) | 2 | 3./4.VİTES SENKROMENÇ | ENGAGING RING | | (1) | ♦ | |
| 59 | K21.03146 | 945 262 8234 | (945 262 5434) | 2 | 3./4.VİTES SENKROMENÇ | ENGAGING RING | | (2) | ♦ | ♦ |
| 60 | K21.03016 | 389 262 0737 | (387 262 0937) | 2 | 3./4.VİTES FRENLEME (Mo) | SYNCHRONIZING CONE / Mo | | (1) | ♦ | |
| | | | (389 262 1137) | | | | | | | |
| 60 | K21.06041 | 945 260 0650 | | 2 | 3./4.VİTES FRENLEME (C) | SYNCHRONIZING CONE / C | | (1) | ♦ | |
| 60 | K21.03148 | 947 260 1945 | (947 260 4645) | 2 | 3./4.VİTES FRENLEME (Mo) | SYNCHRONIZING CONE / Mo | | (2) | ♦ | ♦ |
| | | | (946 262 6137) | | | | | | | |
| 60 | K21.06299 | 947 260 3545 | (947 260 5145) | 2 | 3./4.VİTES FRENLEME (C) | SYNCHRONIZING CONE / C | | (2) | ♦ | ♦ |
| | | | (947 260 2945) | | | | | | | |
| | | | (947 260 0745) | | | | | | | |
| 61 | K21.03055 | 387 262 0893 | (387 262 0793) | 2 | FRENLEME TELİ | SPRING | | | ♦ | ♦ |
| 62 | K21.04343 | 387 262 2073 | | 1 | 3./4.VİTES YILDIZ DİŞLİ SEKMANI | RETAINING RING | 2,40mm | | ♦ | ♦ |
| 62 | K21.06687 | 387 262 2173 | | 1 | 3./4.VİTES YILDIZ DİŞLİ SEKMANI | RETAINING RING | 2,45mm | | ♦ | ♦ |
| 62 | K21.04342 | 007 994 0041 | (387 262 2273) | 1 | 3./4.VİTES YILDIZ DİŞLİ SEKMANI | RETAINING RING | 2,50mm | | ♦ | ♦ |
| 62 | K21.04359 | 387 262 2373 | | 1 | 3./4.VİTES YILDIZ DİŞLİ SEKMANI | RETAINING RING | 2,55mm | | ♦ | ♦ |
| 62 | K21.04345 | 387 262 2473 | | 1 | 3./4.VİTES YILDIZ DİŞLİ SEKMANI | RETAINING RING | 2,60mm | | ♦ | ♦ |
| 62 | K21.07021 | 387 262 2573 | | 1 | 3./4.VİTES YILDIZ DİŞLİ SEKMANI | RETAINING RING | 2,65mm | | ♦ | ♦ |
| 62 | K21.04344 | 387 262 7973 | | 1 | 3./4.VİTES YILDIZ DİŞLİ SEKMANI | RETAINING RING | 2,70mm | | ♦ | ♦ |
| 62 | K21.07022 | 387 262 8073 | | 1 | 3./4.VİTES YILDIZ DİŞLİ SEKMANI | RETAINING RING | 2,75mm | | ♦ | ♦ |
| 62 | K21.06588 | 387 262 8173 | | 1 | 3./4.VİTES YILDIZ DİŞLİ SEKMANI | RETAINING RING | 2,80mm | | ♦ | ♦ |
| 63 | K21.03149 | 389 262 4735 | (389 262 4635) | 1 | 3./4.VİTES YILDIZ DİŞLİ | SYNCHRONIZER HUB | | | ♦ | ♦ |
| 64 | K21.03009 | 945 262 2723 | (945 262 0423) | 1 | 3./4.VİTES HALKA | ENGAGING SLEEVE | | (1) | ♦ | |
| | | | (389 262 2623) | | | | | | | |
| 64 | K21.03151 | 945 262 6523 | (930 262 0523) | 1 | 3./4.VİTES HALKA | ENGAGING SLEEVE | | (2) | ♦ | ♦ |
| 65 | K21.06405 | 945 260 1030 | (945 265 0802) | 1 | 3./4.VİTES HİLALİ | SHIFTING FORK 3rd/4th | | | ♦ | |
| 65 | | 945 260 3730 | (945 260 2630) | 1 | 3./4.VİTES HİLALİ | SHIFTING FORK 3rd/4th | | | ♦ | |
| 65 | K21.07008 | 960 265 1002 | | 1 | 3./4.VİTES HİLALİ | SHIFTING FORK 3rd/4th | | | | ♦ |
| 66 | | 945 265 0404 | | 1 | 3./4.VİTES HİLAL ÇITASI | SHIFTING ROD 3rd/4th | | | ♦ | |
| 66 | | 960 265 0604 | | 1 | 3./4.VİTES HİLAL ÇITASI | SHIFTING ROD 3rd/4th | | | | ♦ |
| 67 | K21.04307 | 960 265 0774 | (945 265 1274) | 2 | HİLAL CİVATASI | PIN | | | ♦ | |
| | | | (945 265 2974) | | | | | | | |
| | | | (945 265 2774) | | | | | | | |
| 67 | K21.04308 | 960 265 0874 | (945 265 1374) | 2 | HİLAL CİVATASI | PIN | | | | ♦ |
| | | | (960 265 0674) | | | | | | | |
| 68 | K21.03152 | 945 262 3513 | (945 262 3413) | 1 | 3.VİTES DİŞLİSİ 34 DİŞ | GEAR 3rd 34 T. | | | ♦ | ♦ |
| | | | (930 262 0713) | | | | | | | |
| 69 | K21.03810 | 018 981 6610 | (010 981 5310) | 2 | 2./3.VİTES MASURA BİLYA | NEEDLE CAGE | 85X93X53mm | | ♦ | ♦ |
| 70 | K21.03156 | 945 262 4505 | | 1 | KAMALI MİL | MAIN SHAFT | | (3) | ♦ | |
| 70 | K21.03029 | 945 262 3605 | (945 262 3505) | 1 | KAMALI MİL | MAIN SHAFT | | (4) | ♦ | |
| 70 | K21.06042 | 930 262 1205 | (930 262 2405) | 1 | KAMALI MİL | MAIN SHAFT | | (5) | ♦ | |
| 70 | K21.06503 | 960 262 0205 | | 1 | KAMALI MİL | MAIN SHAFT | | (6) | | ♦ |
| 71 | K21.03158 | 389 262 2812 | (389 262 2512) | 1 | 2.VİTES DİŞLİSİ 39 DİŞ | GEAR 2nd 39 T. | | | ♦ | ♦ |
| | | | (389 262 3712) | | | | | | | |
| | | | (945 262 3112) | | | | | | | |

NOTES :
Parts encoded alphabetic and numaric are used together.

NOTLAR :
Alfabetik ve rakam ile kodlanan parçalar birlikte kullanılır.





Original parts names, oem numbers, symbols and descriptions used in this catalogue are for reference purposes only.

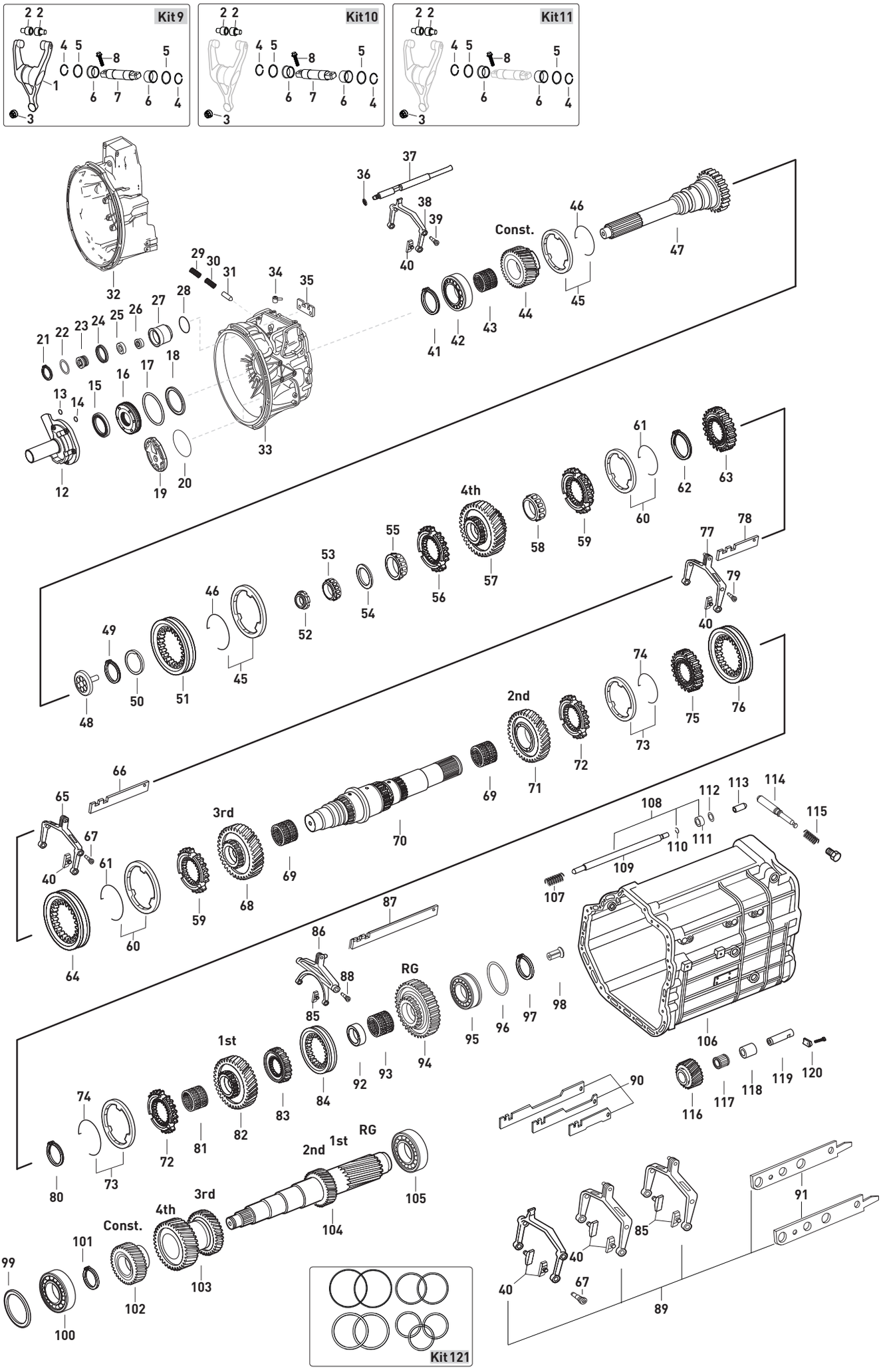




Original parts names, oem numbers, symbols and descriptions used in this catalogue are for reference purposes only.

| Fig. | Kacmaz No | Oem No | Oem Old No | Pcs. | Ürün Tanımı | Description | Sizes | Not | 715507 | 715508 |
|---|---|---|---|---|---|---|---|---|---|---|
| 72 | K21.03025 | 945 262 0434 | (389 262 0034) | 2 | 1./2.VİTES SENKROMENÇ | ENGAGING RING | | (1) | ♦ | |
| 72 | K21.03160 | 945 262 5534 | | 2 | 1./2.VİTES SENKROMENÇ | ENGAGING RING | | (2) | ♦ | ♦ |
| 73 | K21.03016 | 389 262 0737 | (387 262 0937) | 2 | 1./2.VİTES FRENLEME (Mo) | SYNCHRONIZING CONE / Mo | | (1) | ♦ | |
| | | | (389 262 1137) | | | | | | | |
| 73 | K21.06041 | 945 260 0650 | | 2 | 1./2.VİTES FRENLEME (C) | SYNCHRONIZING CONE / C | | (1) | ♦ | |
| 73 | K21.03148 | 947 260 1945 | (947 260 4645) | 2 | 1./2.VİTES FRENLEME (Mo) | SYNCHRONIZING CONE / Mo | | (2) | ♦ | ♦ |
| | | | (946 262 6137) | | | | | | | |
| 73 | K21.06299 | 947 260 3545 | (947 260 5145) | 2 | 1./2.VİTES FRENLEME (C) | SYNCHRONIZING CONE / C | | (2) | ♦ | ♦ |
| | | | (947 260 2945) | | | | | | | |
| | | | (947 260 0745) | | | | | | | |
| 74 | K21.03055 | 387 262 0893 | (387 262 0793) | 2 | FRENLEME TELİ | SPRING | | | ♦ | ♦ |
| 75 | K21.03161 | 389 262 2535 | (945 262 0135) | 1 | 1./2.VİTES YILDIZ DİŞLİ | SYNCHRONIZER HUB | | | ♦ | ♦ |
| 76 | K21.03009 | 945 262 2723 | (945 262 0423) | 1 | 1./2.VİTES HALKA | ENGAGING SLEEVE | | (1) | ♦ | |
| | | | (389 262 2623) | | | | | | | |
| 76 | K21.03151 | 945 262 6523 | (930 262 0523) | 1 | 1./2.VİTES HALKA | ENGAGING SLEEVE | | (2) | ♦ | ♦ |
| 77 | K21.06258 | 945 260 0230 | (945 260 0330) | 1 | 1./2.VİTES HİLALİ | SHIFTING FORK 1st/2nd | | | ♦ | ♦ |
| | | | (945 265 0301) | | | | | | | |
| 77 | | 945 260 3630 | (945 260 3030) | 1 | 1./2.VİTES HİLALİ | SHIFTING FORK 1st/2nd | | | ♦ | ♦ |
| 78 | | 945 265 1904 | | 1 | 1./2.VİTES HİLAL ÇITASI | SHIFTING ROD 1st/2nd | | | ♦ | |
| 78 | | 960 265 1004 | | 1 | 1./2.VİTES HİLAL ÇITASI | SHIFTING ROD 1st/2nd | | | | ♦ |
| 79 | K21.04307 | 960 265 0774 | (945 265 1274) | 2 | HİLAL CİVATASI | PIN | | | ♦ | |
| | | | (945 265 2974) | | | | | | | |
| | | | (945 265 2774) | | | | | | | |
| 80 | K21.04343 | 387 262 2073 | | 1 | 1./2.VİTES YILDIZ DİŞLİ SEKMANI | RETAINING RING | 2,40mm | | ♦ | ♦ |
| 80 | K21.06687 | 387 262 2173 | | 1 | 1./2.VİTES YILDIZ DİŞLİ SEKMANI | RETAINING RING | 2,45mm | | ♦ | ♦ |
| 80 | K21.04342 | 007 994 0041 | (387 262 2273) | 1 | 1./2.VİTES YILDIZ DİŞLİ SEKMANI | RETAINING RING | 2,50mm | | ♦ | ♦ |
| 80 | K21.04359 | 387 262 2373 | | 1 | 1./2.VİTES YILDIZ DİŞLİ SEKMANI | RETAINING RING | 2,55mm | | ♦ | ♦ |
| 80 | K21.04345 | 387 262 2473 | | 1 | 1./2.VİTES YILDIZ DİŞLİ SEKMANI | RETAINING RING | 2,60mm | | ♦ | ♦ |
| 80 | K21.07021 | 387 262 2573 | | 1 | 1./2.VİTES YILDIZ DİŞLİ SEKMANI | RETAINING RING | 2,65mm | | ♦ | ♦ |
| 80 | K21.04344 | 387 262 7973 | | 1 | 1./2.VİTES YILDIZ DİŞLİ SEKMANI | RETAINING RING | 2,70mm | | ♦ | ♦ |
| 80 | K21.07022 | 387 262 8073 | | 1 | 1./2.VİTES YILDIZ DİŞLİ SEKMANI | RETAINING RING | 2,75mm | | ♦ | ♦ |
| 80 | K21.06588 | 387 262 8173 | | 1 | 1./2.VİTES YILDIZ DİŞLİ SEKMANI | RETAINING RING | 2,80mm | | ♦ | ♦ |
| 81 | K21.03839 | 945 981 0010 | (018 981 8110) | 1 | 1.VİTES MASURA BİLYA | NEEDLE CAGE | 75X83X48mm | (3)(5)(6) | ♦ | ♦ |
| | | | (018 981 7610) | | | | | | | |
| 81 | K21.03817 | 019 981 4410 | (007 981 4210) | 1 | 1.VİTES MASURA BİLYA | NEEDLE CAGE | 75X83X55mm | (4) | | ♦ |
| | | | (008 981 8310) | | | | | | | |
| | | | (009 981 0010) | | | | | | | |
| 82 | K21.03162 | 946 262 0811 | (389 262 2711) | 1 | 1.VİTES DİŞLİSİ 44 DİŞ | GEAR 1st 44 T. | | | ♦ | ♦ |
| | | | (946 262 0911) | | | | | | | |
| | | | (945 262 3111) | | | | | | | |
| | | | (389 262 2011) | | | | | | | |
| | | | (945 262 0811) | | | | | | | |
| 83 | K21.06995 | 945 262 3935 | | 1 | GERİ VİTES YILDIZ DİŞLİ | SYNCHRONIZER HUB | | (D) | ♦ | |
| 83 | K21.03163 | 945 262 3835 | | 1 | GERİ VİTES YILDIZ DİŞLİ | SYNCHRONIZER HUB | | (F) | ♦ | |
| 83 | K21.03059 | 389 262 0135 | | 1 | GERİ VİTES YILDIZ DİŞLİ | SYNCHRONIZER HUB | | (C)(E) | ♦ | ♦ |
| 83 | K21.03164 | 389 262 3935 | | 1 | GERİ VİTES YILDIZ DİŞLİ | SYNCHRONIZER HUB | | (G) | ♦ | |
| 84 | K21.03060 | 389 262 1723 | (389 262 0023) | 1 | GERİ VİTES HALKASI | ENGAGING SLEEVE | | (C)(E) | ♦ | ♦ |
| 84 | K21.03061 | 389 262 1823 | (389 262 0923) | 1 | GERİ VİTES HALKASI | ENGAGING SLEEVE | | (D)(F)(G) | ♦ | |
| 85 | K21.03410 | 947 265 0249 | (945 265 0149) | 2 | GERİ VİTES HİLAL PABUCU | SLIDING PAD | | | ♦ | ♦ |
| 86 | K21.06699 | 960 265 0403 | | 1 | GERİ VİTES HİLALİ | SHIFTING FORK | | | | ♦ |
| 86 | K21.06259 | 945 260 0430 | (945 265 0003) | 1 | GERİ VİTES HİLALİ | SHIFTING FORK | | | ♦ | |
| 87 | | 945 265 1104 | (945 265 0204) | 1 | GERİ VİTES HİLAL ÇITASI | SHIFTING ROD | | | ♦ | |
| 87 | | 960 265 2704 | | 1 | GERİ VİTES HİLAL ÇITASI | SHIFTING ROD | | | | ♦ |

NOTES :
Parts encoded alphabetic and numaric are used together.

NOTLAR :
Alfabetik ve rakam ile kodlanan parçalar birlikte kullanılır.





Original parts names, oem numbers, symbols and descriptions used in this catalogue are for reference purposes only.

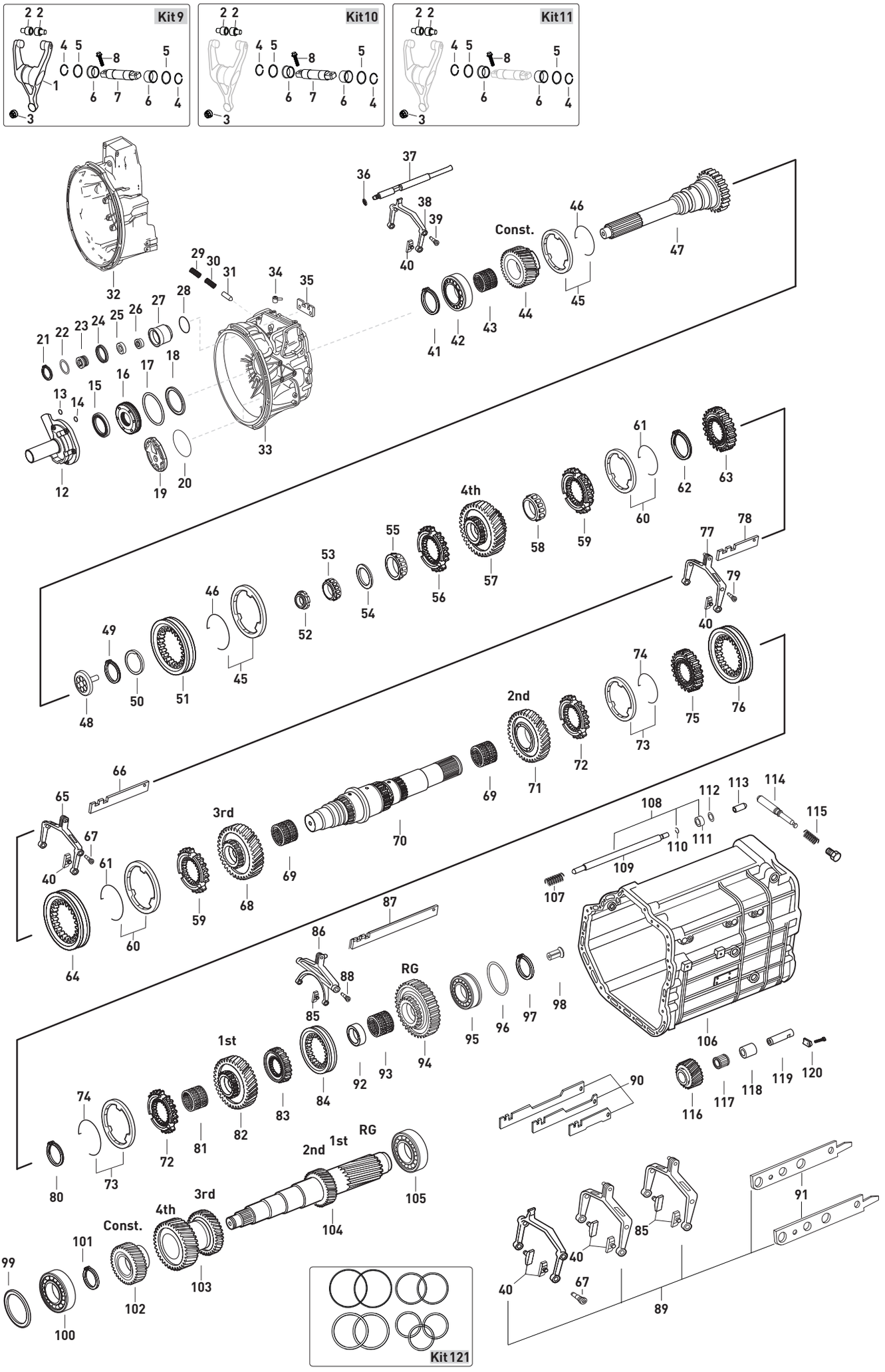




Original parts names, oem numbers, symbols and descriptions used in this catalogue are for reference purposes only.

| Fig. | Kacmaz No | Oem No | Oem Old No | Pcs. | Ürün Tanımı | Description | Sizes | Not | 715507 | 715508 |
|---|---|---|---|---|---|---|---|---|---|---|
| 88 | K21.04307 | 960 265 0774 | (945 265 1274) | 2 | HİLAL CİVATASI | PIN | | | ♦ | |
| | | | (945 265 2974) | | | | | | | |
| | | | (945 265 2774) | | | | | | | |
| 89 | | 960 260 4230 | | Kit | VİTES HİLAL TAKIMI | REPAIR KIT | | | | ♦ |
| 90 | | 960 260 0531 | | Kit | VİTES HİLAL ÇITA TAKIMI | REPAIR KIT | | | | ♦ |
| 91 | | 960 260 0732 | | Kit | VİTES HİLAL ÇITA TAKIMI | REPAIR KIT | | | | ♦ |
| 92 | K21.03065 | 389 262 0150 | | 1 | GERİ VİTES MASURA BİLYA ÇANAĞI | BEARING RACE | | (C)(D)(5)(6) | ♦ | ♦ |
| 92 | K21.03112 | 389 262 2550 | (389 262 1650) | 1 | GERİ VİTES MASURA BİLYA ÇANAĞI | BEARING RACE | | (E)(F)(G)(3)(4) | ♦ | |
| | | | (389 262 0050) | | | | | | | |
| 93 | K21.03813 | 013 981 1810 | (013 981 2610) | 1 | GERİ VİTES MASURA BİLYA | NEEDLE CAGE | 78X86X33mm | (C)(D)(5)(6) | ♦ | ♦ |
| | | | (013 981 1710) | | | | | | | |
| 93 | K21.03803 | 009 981 1510 | (017 981 7810) | 1 | GERİ VİTES MASURA BİLYA | NEEDLE CAGE | 78X86X35mm | (E)(F)(G)(3)(4) | ♦ | |
| | | | (008 981 9310) | | | | | | | |
| | | | (012 981 9110) | | | | | | | |
| 94 | K21.06045 | 930 262 0233 | | 1 | GERİ VİTES DİŞLİSİ 40 DİŞ | REVERSE GEAR 40 T. | | (C)(5)(6) | ♦ | ♦ |
| 94 | K21.06044 | 960 262 0033 | | 1 | GERİ VİTES DİŞLİSİ 40 DİŞ | REVERSE GEAR 40 T. | | (D)(5) | ♦ | |
| 94 | K21.03165 | 945 262 3233 | (389 262 2033) | 1 | GERİ VİTES DİŞLİSİ 40 DİŞ | REVERSE GEAR 40 T. | | (E)(3)(4) | ♦ | ♦ |
| 94 | K21.03167 | 945 262 4433 | | 1 | GERİ VİTES DİŞLİSİ 40 DİŞ | REVERSE GEAR 40 T. | | (F)(3)(4) | ♦ | ♦ |
| 94 | K21.03168 | 945 262 3333 | (389 262 2133) | 1 | GERİ VİTES DİŞLİSİ 40 DİŞ | REVERSE GEAR 40 T. | | (G)(3)(4) | ♦ | ♦ |
| 95 | K21.03661 | 002 981 8181 | | 1 | KAMALI MİL ARKA BİLYA | ROLLER BEARING | 60X130X35,2mm | (C)(D)(5)(6) | ♦ | ♦ |
| 95 | K21.03623 | 014 981 6105 | (016 981 1305) | 1 | KAMALI MİL ARKA BİLYA | ROLLER BEARING | 60X130X33,2mm | (E)(F)(G)(3)(4) | ♦ | |
| | | | (014 981 7505) | | | | | | | |
| 96 | K21.04182 | 389 262 3552 | | 1 | KAMALI MİL ARKA BİLYA RAYNELİ | THRUST WASHER | 0,10mm | | ♦ | ♦ |
| 96 | K21.04184 | 389 262 3652 | | 1 | KAMALI MİL ARKA BİLYA RAYNELİ | THRUST WASHER | 0,15mm | | ♦ | ♦ |
| 96 | K21.04152 | 389 262 3752 | | 1 | KAMALI MİL ARKA BİLYA RAYNELİ | THRUST WASHER | 0,20mm | | ♦ | ♦ |
| 96 | K21.94152 | | | 1 | KAMALI MİL ARKA BİLYA RAYNELİ | THRUST WASHER | 0,30mm | | ♦ | ♦ |
| 96 | K21.04183 | 389 262 3852 | | 1 | KAMALI MİL ARKA BİLYA RAYNELİ | THRUST WASHER | 0,40mm | | ♦ | ♦ |
| 96 | K21.94183 | | | 1 | KAMALI MİL ARKA BİLYA RAYNELİ | THRUST WASHER | 0,50mm | | ♦ | ♦ |
| 96 | K21.84183 | | | 1 | KAMALI MİL ARKA BİLYA RAYNELİ | THRUST WASHER | 0,60mm | | ♦ | ♦ |
| 96 | K21.74183 | | | 1 | KAMALI MİL ARKA BİLYA RAYNELİ | THRUST WASHER | 0,70mm | | ♦ | ♦ |
| 96 | K21.04185 | 389 262 3952 | | 1 | KAMALI MİL ARKA BİLYA RAYNELİ | THRUST WASHER | 0,80mm | | ♦ | ♦ |
| 96 | K21.06718 | 010 990 8382 | | 1 | KAMALI MİL ARKA BİLYA RAYNELİ | THRUST WASHER | 1,00mm | | ♦ | ♦ |
| 97 | K21.04331 | 007 994 1841 | (006 994 9941) | 1 | KAMALI MİL ARKA BİLYA SEKMANI | RETAINING RING | 2,50mm | | ♦ | ♦ |
| 98 | K21.04364 | 001 990 2759 | | 1 | KAMALI MİL YAĞ BORUSU | OIL PIPE | | (5)(6) | ♦ | ♦ |
| 99 | K21.04192 | 406 337 0252 | | 1 | GRUP MİLİ ÖN BİLYA RAYNELİ | THRUST WASHER | 0,10mm | | ♦ | ♦ |
| 99 | K21.04150 | 406 337 0352 | | 1 | GRUP MİLİ ÖN BİLYA RAYNELİ | THRUST WASHER | 0,20mm | | ♦ | ♦ |
| 99 | K21.94150 | | | 1 | GRUP MİLİ ÖN BİLYA RAYNELİ | THRUST WASHER | 0,25mm | | ♦ | ♦ |
| 99 | K21.04338 | 406 337 0452 | | 1 | GRUP MİLİ ÖN BİLYA RAYNELİ | THRUST WASHER | 0,30mm | | ♦ | ♦ |
| 99 | K21.04196 | 389 263 5352 | (389 263 3252) | 1 | GRUP MİLİ ÖN BİLYA RAYNELİ | THRUST WASHER | 0,40mm | | ♦ | ♦ |
| 99 | K21.04194 | 389 263 3352 | | 1 | GRUP MİLİ ÖN BİLYA RAYNELİ | THRUST WASHER | 0,45mm | | ♦ | ♦ |
| 99 | K21.06719 | 389 263 5652 | | 1 | GRUP MİLİ ÖN BİLYA RAYNELİ | THRUST WASHER | 0,49mm | | ♦ | ♦ |
| 99 | K21.04197 | 389 263 5852 | (389 263 3552) | 1 | GRUP MİLİ ÖN BİLYA RAYNELİ | THRUST WASHER | 0,55mm | | ♦ | ♦ |
| 99 | K21.04340 | 389 263 6052 | | 1 | GRUP MİLİ ÖN BİLYA RAYNELİ | THRUST WASHER | 0,61mm | | ♦ | ♦ |
| 99 | K21.04198 | 389 263 6352 | (389 263 3852) | 1 | GRUP MİLİ ÖN BİLYA RAYNELİ | THRUST WASHER | 0,70mm | | ♦ | ♦ |
| 99 | K21.04154 | 389 263 3952 | | 1 | GRUP MİLİ ÖN BİLYA RAYNELİ | THRUST WASHER | 0,75mm | | ♦ | ♦ |
| 99 | K21.04199 | 389 263 6852 | | 1 | GRUP MİLİ ÖN BİLYA RAYNELİ | THRUST WASHER | 0,85mm | | ♦ | ♦ |
| 99 | K21.04200 | 389 263 7352 | | 1 | GRUP MİLİ ÖN BİLYA RAYNELİ | THRUST WASHER | 1,00mm | | ♦ | ♦ |
| 99 | K21.04201 | 389 263 7852 | | 1 | GRUP MİLİ ÖN BİLYA RAYNELİ | THRUST WASHER | 1,15mm | | ♦ | ♦ |
| 99 | K21.04202 | 389 263 8352 | | 1 | GRUP MİLİ ÖN BİLYA RAYNELİ | THRUST WASHER | 1,30mm | | ♦ | ♦ |
| 100 | K21.03606 | 015 981 9005 | (014 981 1405) | 1 | GRUP MİLİ ÖN BİLYA | ROLLER BEARING | 50,8X100X35mm | | ♦ | ♦ |
| | | | (012 981 7405) | | | | | | | |
| | | | (012 981 5105) | | | | | | | |
| 101 | K21.06425 | 389 994 0041 | | 1 | GRUP MİLİ ÖN BİLYA SEKMANI | RETAINING RING | 2,50mm | | ♦ | ♦ |

NOTES :
Parts encoded alphabetic and numaric are used together.

NOTLAR :
Alfabetik ve rakam ile kodlanan parçalar birlikte kullanılır.





Original parts names, oem numbers, symbols and descriptions used in this catalogue are for reference purposes only.

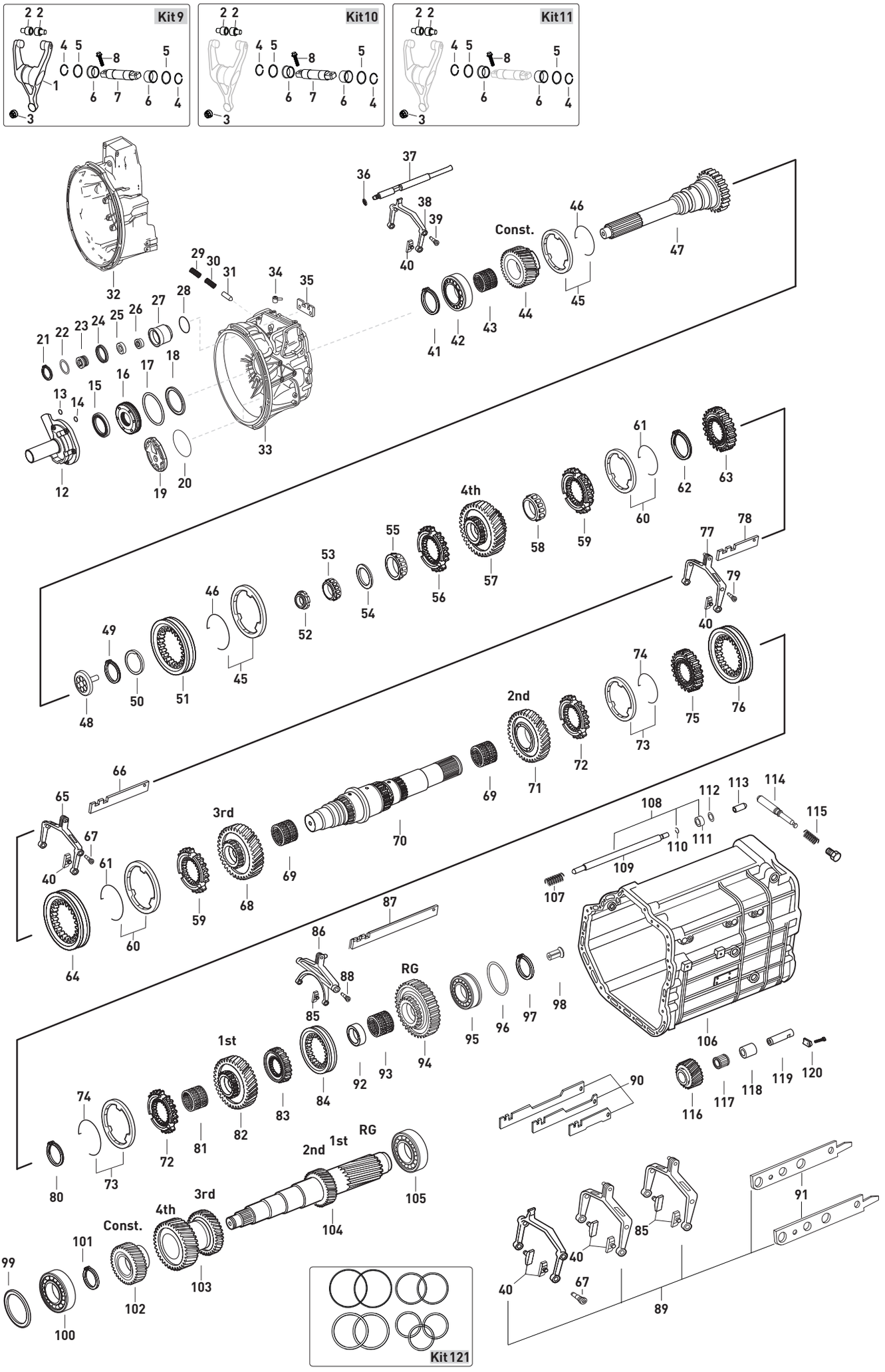




Original parts names, oem numbers, symbols and descriptions used in this catalogue are for reference purposes only.

| Fig. | Kacmaz No | Oem No | Oem Old No | Pcs. | Ürün Tanımı | Description | Sizes | Not | 715507 | 715508 |
|---|---|---|---|---|---|---|---|---|---|---|
| 102 | K21.03170 | 945 263 0710 | (945 263 0810) | 1 | TAKVİYE DİŞLİ KARŞILIĞI 31 DİŞ | CONSTANT GEAR 31 T. | | | ♦ | ♦ |
| | | | (389 263 1410) | | | | | | | |
| 103 | K21.03171 | 945 263 2913 | (945 263 0213) | 1 | 3./4.VİTES DİŞLİ KARŞILIĞI 27/34 DİŞ | DOUBLE GEAR 3rd/4th 27/34 T. | | | ♦ | ♦ |
| | | | (945 263 1013) | | | | | | | |
| | | | (945 263 0513) | | | | | | | |
| | | | (945 263 1413) | | | | | | | |
| | | | (945 263 1513) | | | | | | | |
| | | | (945 263 7113) | | | | | | | |
| | | | (945 263 7013) | | | | | | | |
| | | | (945 263 6913) | | | | | | | |
| 104 | K21.03175 | 945 263 2902 | (945 263 0902) | 1 | GRUP MİLİ 16/21 DİŞ | COUNTER SHAFT 16/21 T. | | | ♦ | ♦ |
| | | | (389 263 3102) | | | | | | | |
| | | | (389 263 2502) | | | | | | | |
| | | | (389 263 1602) | | | | | | | |
| | | | (389 263 1302) | | | | | | | |
| 105 | K21.03624 | 016 981 1205 | (012 981 9405) | 1 | GRUP MİLİ ARKA BİLYA | ROLLER BEARING | 60X130X33,8mm | | ♦ | ♦ |
| | | | (012 981 9205) | | | | | | | |
| 106 | | 930 260 2511 | (945 260 9911) | 1 | ŞANZIMAN ORTA GÖVDE | HOUSING | | | ♦ | |
| 106 | | 960 261 2929 | | 1 | ŞANZIMAN ORTA GÖVDE | HOUSING | | | | ♦ |
| 107 | | 389 993 0501 | | 1 | KİLİTLEME MİL YAYI | SPRING | | | ♦ | ♦ |
| 108 | | 960 260 0633 | | 1 | KİLİTLEME MİL TAKIMI | REPAIR KIT | | | | ♦ |
| 109 | K21.06046 | 945 268 0225 | | 1 | KİLİTLEME MİLİ | SHIFTING ROD | | | ♦ | |
| 110 | | 007993 012200 | | 1 | KİLİTLEME MİLİ SEKMANI | RETAINING RING | | | ♦ | ♦ |
| 111 | | 389 268 0051 | | 1 | KİLİTLEME MİL BURCU | SPACER RING | | | ♦ | ♦ |
| 112 | | 000998 006019 | | 1 | KİLİTLEME MİLİ AYAR RAYNELİ | FITTED WASHER | 0,10mm | | ♦ | ♦ |
| 112 | | 000998 006020 | | 1 | KİLİTLEME MİLİ AYAR RAYNELİ | FITTED WASHER | 0,20mm | | ♦ | ♦ |
| 112 | | 000988 006021 | | 1 | KİLİTLEME MİLİ AYAR RAYNELİ | FITTED WASHER | 0,30mm | | ♦ | ♦ |
| 112 | | 000988 006013 | | 1 | KİLİTLEME MİLİ AYAR RAYNELİ | FITTED WASHER | 0,50mm | | ♦ | ♦ |
| 112 | | 000988 006001 | | 1 | KİLİTLEME MİLİ AYAR RAYNELİ | FITTED WASHER | 1,00mm | | ♦ | ♦ |
| 113 | K21.03489 | 389 268 0674 | | 1 | KİLİTLEME MİL FİŞEĞİ | PIN | | | ♦ | ♦ |
| 114 | K21.03486 | 389 267 0974 | | 1 | AĞIR SERİ KİLİTLEME MİLİ | PIN | | | ♦ | ♦ |
| 115 | K21.06006 | 389 993 3401 | (389 993 0601) | 1 | AĞIR SERİ KİLİTLEME YAYI | SPRING | | | ♦ | ♦ |
| 116 | K21.06048 | 389 263 1031 | | 1 | KÜÇÜK GERİ VİTES DİŞLİSİ 21 DİŞ | REVERSE IDLER GEAR 21 T. | | | ♦ | ♦ |
| 117 | K21.03838 | 012 981 8910 | (012 981 9010) | 1 | KÜÇÜK GERİ VİTES MASURA BİLYA | NEEDLE CAGE | 42X50X51mm | | ♦ | ♦ |
| | | | (019 981 1310) | | | | | | | |
| 118 | K21.06031 | 389 263 0850 | | 1 | K.GERİ VİTES MASURA BİLYA ÇANAĞI | BUSHING | 18mm | | ♦ | ♦ |
| 119 | K21.06037 | 976 263 0030 | (976 263 1230) | 1 | KÜÇÜK GERİ VİTES PİMİ | PIN | | | ♦ | ♦ |
| 120 | K21.07010 | 945 263 0041 | | 1 | KÜÇÜK GERİ VİTES PİM KİLİTLEMESİ | KEY | | | ♦ | ♦ |
| 121 | K21.04317 | | | Kit | RAYNEL TAKIMI | WASHER KIT | | | ♦ | ♦ |

NOTES :
Parts encoded alphabetic and numaric are used together.

NOTLAR :
Alfabetik ve rakam ile kodlanan parçalar birlikte kullanılır.





Original parts names, oem numbers, symbols and descriptions used in this catalogue are for reference purposes only.

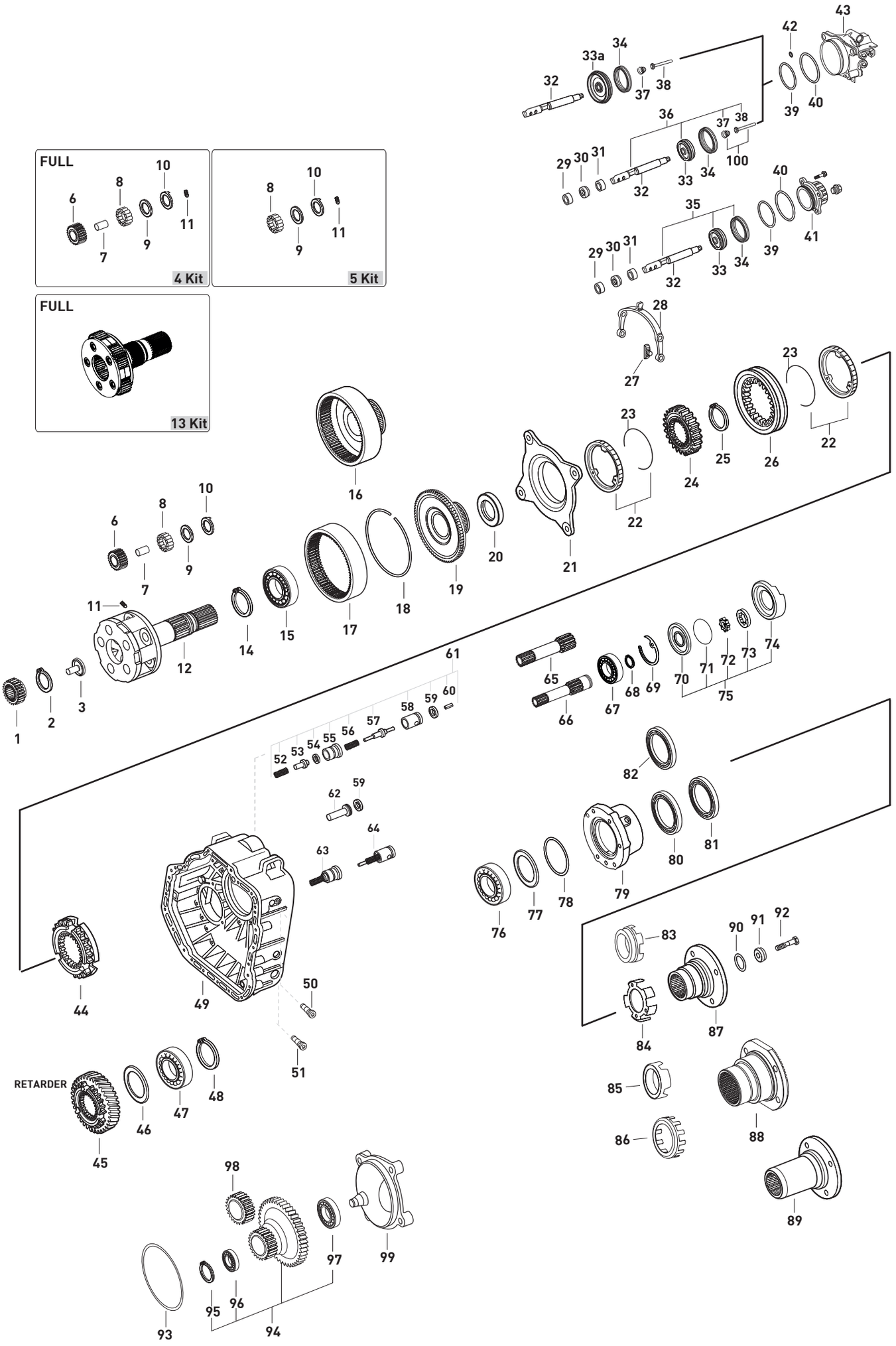




Original parts names, oem numbers, symbols and descriptions used in this catalogue are for reference purposes only.

| Fig. | Kacmaz No | Oem No | Oem Old No | Pcs. | Ürün Tanımı | Description | Sizes | Not | 715507 | 715508 |
|---|---|---|---|---|---|---|---|---|---|---|
| 1 | K21.03169 | 945 262 0909 | (389 262 0809) | 1 | GÜNEŞ DİŞLİ 25 DİŞ | SUN GEAR 25 T. | | | ♦ | |
| | | | (389 262 0909) | | | | | | | |
| 1 | K21.06506 | 960 262 0009 | (948 262 0209) | 1 | GÜNEŞ DİŞLİ 25 DİŞ | SUN GEAR 25 T. | | | | ♦ |
| 2 | K21.04115 | 000472 060000 | | 1 | HEYKEL YAĞ PİPET SEKMANI | SNAP RING | 2,00mm | | ♦ | ♦ |
| 3 | K21.03435 | 945 269 0834 | (389 269 4734) | 1 | ŞANZIMAN HEYKELİ YAĞ PİPETİ | OIL TUBE | | | ♦ | ♦ |
| 4 | K21.03178 | 946 260 0097 | (655 260 0197) | Kit | HEYKEL KOZA DİŞLİ TAKIMI | PLANETARY GEAR SET | | | ♦ | ♦ |
| 5 | K21.03663 | | | Kit | HEYKEL BİLYA VE PUL TAKIMI | WASHER KIT | | | ♦ | ♦ |
| 6 | K21.03436 | 945 262 0006 | | 5 | HEYKEL KOZA DİŞLİSİ 28 DİŞ | PLANETARY GEAR 28 T. | | | ♦ | ♦ |
| 7 | K21.03437 | 389 262 0407 | | 5 | HEYKEL KOZA DİŞLİ PİMİ | PLANETARY GEAR PIN | | | ♦ | ♦ |
| 8 | K21.03816 | 000 981 4186 | (000 981 4386) | 125 | HEYKEL KOZA DİŞLİ TANE BİLYA | NEEDLE ROLLER | D5X39,6 | | ♦ | ♦ |
| 9 | K21.04074 | 389 262 0162 | (389 262 6462) | 10 | HEYKEL KOZA DİŞLİ PULU | THRUST WASHER | | | ♦ | ♦ |
| | | | (389 262 0562) | | | | | | | |
| 10 | K21.04075 | 945 262 1162 | (945 262 0162) | 10 | HEYKEL KOZA DİŞLİ PULU | THRUST WASHER | | | ♦ | ♦ |
| | | | (389 262 1462) | | | | | | | |
| 11 | K21.03418 | 000914 006109 | | 5 | HEYKEL KOZA DİŞLİ VİDASI | THREADED PIN | M6X14 | | ♦ | ♦ |
| 12 | K21.03180 | 946 260 3561 | (946 260 3661) | 1 | ŞANZIMAN HEYKELİ (BOŞ) | PLANETARY CARRIER (EMPTY) | | | ♦ | ♦ |
| | | | (945 260 4561) | | | | | | | |
| | | | (945 260 4461) | | | | | | | |
| 13 | K21.06313 | 945 260 4661 | | Kit | ŞANZIMAN HEYKELİ (DOLU) | PLANETARY CARRIER (FULL) | | | ♦ | ♦ |
| 14 | K21.06864 | 000472 130000 | | 1 | ÇEMBER DİŞLİ BİLYA SEKMANI | RETAINING RING | 130X4mm | | ♦ | ♦ |
| 15 | K21.03614 | 008 981 1325 | (004 981 8725) | 1 | ÇEMBER DİŞLİ BİLYASI | ROLLER BEARING | 90x130x14mm | | ♦ | ♦ |
| | | | (004 981 8825) | | | | | | | |
| | | | (004 981 9425) | | | | | | | |
| 16 | K21.03438 | 945 262 0108 | (389 262 0808) | 1 | ÇEMBER DİŞLİ 85 DİŞ | RING WHEEL 85 T. | | | ♦ | |
| 17 | K21.03449 | 945 262 1208 | (945 262 0808) | 1 | ÇEMBER DİŞLİ 85 DİŞ | RING WHEEL 85 T. | | | ♦ | ♦ |
| 17 | K21.03440 | 945 262 0208 | | 1 | ÇEMBER DİŞLİ 85 DİŞ | RING WHEEL 85 T. | | | ♦ | |
| 18 | K21.04253 | 389 262 0773 | | 1 | ÇEMBER DİŞLİ SEKMANI | LOCK RING | | | ♦ | ♦ |
| 19 | K21.03442 | 930 262 0125 | (389 262 1425) | 1 | PLANET ÇAN DİŞLİ 85 DİŞ | CARRIER HUB 85 T. | | | ♦ | ♦ |
| 20 | K21.04076 | 389 262 0251 | | 1 | ŞANZIMAN HEYKELİ ARA PULU | SPACER RING | | | ♦ | ♦ |
| 21 | K21.03018 | 389 260 2036 | | 1 | TABLA SENKROMENÇ | FOLLOWER RING | | (1) | ♦ | |
| 21 | K21.03037 | 947 260 3036 | (947 260 0836) | 1 | TABLA SENKROMENÇ | FOLLOWER RING | | (2) | ♦ | ♦ |
| 22 | K21.03017 | 389 262 0537 | (389 262 0037) | 2 | AĞIR SERİ FRENLEME (Mo) | SYNCHRONIZING CONE / Mo | | (1) | ♦ | |
| | | | (389 262 0137) | | | | | | | |
| | | | (389 262 3337) | | | | | | | |
| 22 | K21.03078 | 945 260 0850 | | 2 | AĞIR SERİ FRENLEME (C) | SYNCHRONIZING CONE / C | | (1) | ♦ | |
| 22 | K21.03185 | 947 260 0945 | | 2 | AĞIR SERİ FRENLEME (Mo) | SYNCHRONIZING CONE / Mo | | (2) | ♦ | ♦ |
| 22 | K21.06273 | 947 260 3045 | | 2 | AĞIR SERİ FRENLEME (C) | SYNCHRONIZING CONE / C | | (2) | ♦ | ♦ |
| 23 | K21.03077 | 389 262 0293 | | 2 | FRENLEME TELİ | SPRING | | | ♦ | ♦ |
| 24 | K21.03079 | 389 262 4935 | (389 262 2035) | 1 | AĞIR SERİ YILDIZ DİŞLİ 73 DİŞ | SYNCHRONIZER HUB 73 T. | | | ♦ | ♦ |
| | | | (400 262 0335) | | | | | | | |
| 25 | K21.04356 | 000471 120000 | | 1 | AĞIR SERİ YILDIZ DİŞLİ SEKMANI | RETAINING RING | | | ♦ | ♦ |
| 26 | K21.03028 | 945 262 6623 | (945 262 0823) | 1 | AĞIR SERİ HALKA 73 DİŞ | ENGAGING SLEEVE 73 T. | | (1) | ♦ | |
| | | | (389 262 1623) | | | | | | | |
| | | | (389 262 3823) | | | | | | | |
| | | | (945 262 2623) | | | | | | | |
| 26 | K21.03033 | 945 262 6923 | (930 262 0623) | 1 | AĞIR SERİ HALKA | ENGAGING SLEEVE | | (2) | ♦ | ♦ |
| 27 | K21.03406 | 389 265 2449 | (945 265 0349) | 2 | AĞIR SERİ HİLAL PABUCU | SLIDING PAD | | (1) | ♦ | |
| | | | (387 265 0049) | | | | | | | |
| | | | (389 265 0949) | | | | | | | |
| | | | (389 265 1249) | | | | | | | |
| 27 | K21.03431 | 960 265 0049 | (947 265 0349) | 2 | AĞIR SERİ HİLAL PABUCU | SLIDING PAD | | (2) | ♦ | ♦ |
| | | | (389 265 2749) | | | | | | | |
| 28 | K21.06411 | 947 265 1701 | (389 265 0901) | 1 | AĞIR SERİ HİLALİ | SHIFTING FORK | | (1) | ♦ | |

NOTES :
Parts encoded alphabetic and numaric are used together.

NOTLAR :
Alfabetik ve rakam ile kodlanan parçalar birlikte kullanılır.





Original parts names, oem numbers, symbols and descriptions used in this catalogue are for reference purposes only.

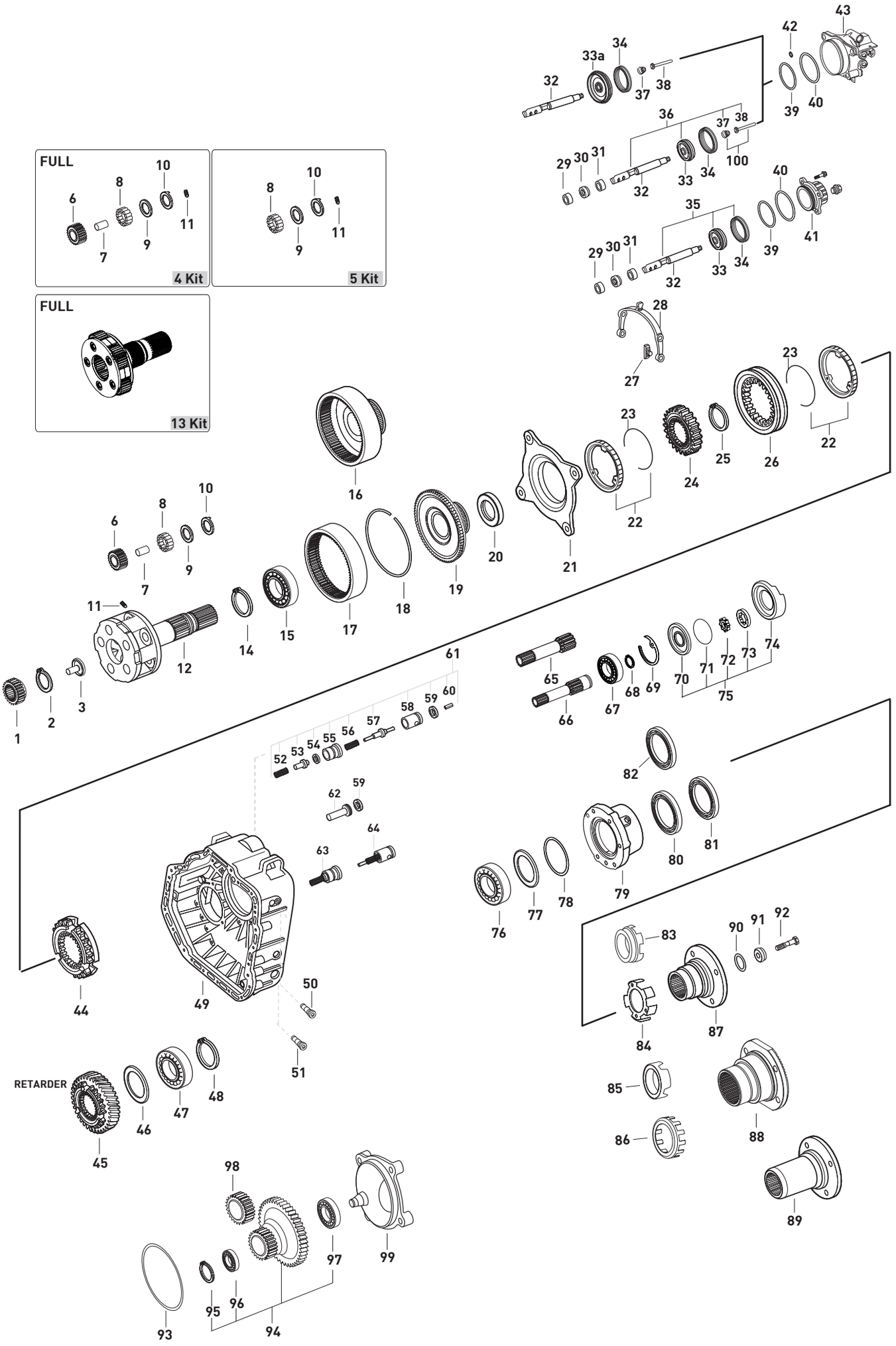




Original parts names, oem numbers, symbols and descriptions used in this catalogue are for reference purposes only.

| Fig. | Kacmaz No | Oem No | Oem Old No | Pcs. | Ürün Tanımı | Description | Sizes | Not | 715507 | 715508 |
|---|---|---|---|---|---|---|---|---|---|---|
| 28 | K21.06324 | 947 265 1901 | (947 265 0901) | 1 | AĞIR SERİ HİLALİ | SHIFTING FORK | | (2) | ♦ | ♦ |
| 29 | K21.04254 | 000 992 7703 | (389 267 2250) | 1 | AĞIR SERİ HİLAL MİL BURCU | BUSHING | 21X25X20mm | | ♦ | |
| 30 | K21.03523 | 000 267 0197 | (000 267 0397) | 1 | AĞIR SERİ HİLAL MİL KEÇESİ | OIL SEAL | 22X32X8mm | | ♦ | ♦ |
| 31 | K21.04178 | 387 267 0650 | (387 267 0250) | 1 | AĞIR SERİ HİLAL MİL BURCU | BUSHING | 34X22X8mm | | ♦ | ♦ |
| 32 | | 945 267 2117 | (389 267 7317) | 1 | AĞIR SERİ HİLAL MİLİ | SHIFTING ROD | | (B)(C) | ♦ | ♦ |
| 32 | K21.06492 | 930 267 0217 | (945 267 2217) | 1 | AĞIR SERİ HİLAL MİLİ | SHIFTING ROD | | (B) | ♦ | |
| 32 | | 389 267 3517 | | 1 | AĞIR SERİ HİLAL MİLİ | SHIFTING ROD | | (A) | ♦ | |
| 33 | K21.06975 | 960 267 0818 | (389 267 1018) | 1 | AĞIR SERİ HİLAL MİL PİSTONU | PISTON | | (A)(B)(C) | ♦ | ♦ |
| | | | (389 267 0118) | | | | | | | |
| 33a | K21.06499 | 930 267 0618 | | 1 | AĞIR SERİ HİLAL MİL PİSTONU | PISTON | | (B)(C) | ♦ | ♦ |
| 34 | K21.03525 | 024 997 8347 | (020 997 6747) | 1 | AĞIR SERİ SİLİNDİR KEÇESİ | SEAL RING | 77x90x17mm | (A)(B)(C) | ♦ | ♦ |
| | | | (014 997 3647) | | | | | | | |
| | | | (014 997 5147) | | | | | | | |
| 35 | | 930 260 2589 | | 1 | AĞIR SERİ HİLAL MİLİ KOMPLE | SHIFTING ROD COMPLETE | | (A) | ♦ | |
| 36 | | 930 260 2289 | | 1 | AĞIR SERİ HİLAL MİLİ KOMPLE | SHIFTING ROD COMPLETE | | (B) | ♦ | |
| 37 | K21.04255 | 008 993 0801 | (000 993 6705) | 1 | OKUYUCU MİL YAYI | SPRING | 9,7x7,7x8,1mm | (B)(C) | ♦ | ♦ |
| 38 | K21.04257 | 000 543 5785 | | 1 | OKUYUCU MİLİ | MAGNETIC PISTON | | (B)(C) | ♦ | ♦ |
| 39 | K21.06399 | 013 997 7548 | | 1 | AĞIR SERİ SİLİNDİR ORİNGİ | O-RING | 89,5X3mm | (A)(B)(C) | ♦ | ♦ |
| 40 | K21.06968 | 017 997 6545 | | 1 | AĞIR SERİ SİLİNDİR ORİNGİ | O-RING | 96X1,5mm | (A)(B)(C) | ♦ | ♦ |
| 41 | K21.03540 | 945 267 1119 | (389 267 1319) | 1 | AĞIR SERİ SİLİNDİRİ | SHIFTING CYLINDER | | (A) | ♦ | |
| | | | (389 267 4219) | | | | | | | |
| | | | (945 267 1319) | | | | | | | |
| | | | (945 267 1619) | | | | | | | |
| 42 | K21.06636 | 015 997 4048 | (020 997 8748) | 1 | AĞIR SERİ SİLİNDİR ORİNGİ | O-RING | 5X3mm | (C) | | ♦ |
| 43 | K21.03541 | 001 260 4963 | | 1 | AĞIR SERİ SİLİNDİRİ | SHIFTING CYLINDER | | (B) | ♦ | |
| 43 | | 945 260 3763 | | 1 | AĞIR SERİ SİLİNDİRİ | SHIFTING CYLINDER | | (C) | | ♦ |
| 44 | K21.03187 | 389 262 9234 | (945 262 1234) | 1 | SERİ SENKROMENÇ | ENGAGING RING | | (1) | ♦ | |
| 44 | K21.03186 | 945 262 3834 | | 1 | SERİ SENKROMENÇ | ENGAGING RING | | (2) | ♦ | ♦ |
| 45 | K21.06050 | 945 264 0130 | (389 264 0730) | 1 | RETARDER DİŞLİSİ 63 DİŞ | RETARDER GEAR 63 T. | | (1) | ♦ | |
| 45 | K21.03188 | 930 264 0320 | | 1 | RETARDER DİŞLİSİ 64 DİŞ | RETARDER GEAR 64 T. | | (2) | ♦ | |
| 45 | | 945 264 0520 | | 1 | RETARDER DİŞLİSİ 63 DİŞ | RETARDER GEAR 63 T. | | (2) | ♦ | |
| 46 | | 387 264 0064 | | 1 | YAĞ TOPLAMA SACI | OIL BAFFLE | | | ♦ | |
| 47 | | 007 981 8201 | (007 981 8701) | 1 | ŞANZIMAN HEYKEL BİLYASI | BEARING | 103X140X26mm | | ♦ | |
| 48 | | 000472 140000 | | 1 | HEYKEL BİLYA SEKMANI | LOCK RING | 140X4mm | | ♦ | |
| 49 | | 945 260 6812 | | 1 | ŞANZIMAN ARKA GÖVDE | HOUSING | | | ♦ | |
| 49 | | 960 260 2212 | | 1 | ŞANZIMAN ARKA GÖVDE | HOUSING | | | | ♦ |
| 50 | K21.06026 | 945 265 3074 | (945 265 1474) | 2 | HİLAL CİVATASI | PIN | | (1) | ♦ | |
| | | | (945 265 1774) | | | | | | | |
| | | | (945 265 2674) | | | | | | | |
| 51 | K21.04307 | 960 265 0774 | (945 265 1274) | 2 | HİLAL CİVATASI | PIN | | (2) | ♦ | ♦ |
| | | | (945 265 2974) | | | | | | | |
| | | | (945 265 2774) | | | | | | | |
| 52 | | 389 993 5301 | | 1 | YAĞ BASINÇ YAYI | SPRING | | | ♦ | |
| 53 | | 389 269 1026 | (389 269 0926) | 1 | YAĞ BASINÇ VALFİ | SELECTOR VALVE | | | ♦ | |
| 54 | K21.04210 | 013 997 0148 | (020 997 8348) | 1 | YAĞ BASINÇ ORİNGİ | O-RING | 13,3X2,4mm | | ♦ | |
| 55 | | 389 269 1444 | (389 269 0744) | 1 | YAĞ BASINÇ VALF GÖVDESİ | VALVE INSERT | | | ♦ | |
| 56 | | 389 993 4401 | | 1 | YAĞ BASINÇ VALF MİL YAYI | SPRING | 11,5X41,9X1mm | | ♦ | |
| 57 | | 389 269 0826 | | 1 | YAĞ BASINÇ VALF MİLİ | SELECTOR VALVE | | | ♦ | |
| 58 | | 389 269 0844 | | 1 | YAĞ BASINÇ VALF TOPU | BALL | | | ♦ | |
| 59 | K21.04212 | 013 997 0048 | (020 997 8248) | 1 | YAĞ BASINÇ VALF ORİNGİ | O-RING | 19,2X3mm | | ♦ | |
| 60 | | 001481 004049 | (001481 004001) | 1 | EMNİYET PİMİ | CLAMPING SLEEVE | | | ♦ | |
| 61 | K21.06962 | 655 260 0157 | | Kit | YAĞ BASINÇ VALFİ KOMPLE | VALVE KIT | | | ♦ | |
| 62 | K21.06979 | 389 265 0176 | (389 265 0076) | 1 | YAĞ BASINÇ VALFİ ALIN FİBERİ | WASHER | | | ♦ | ♦ |

NOTES :
Parts encoded alphabetic and numaric are used together.

NOTLAR :
Alfabetik ve rakam ile kodlanan parçalar birlikte kullanılır.





Original parts names, oem numbers, symbols and descriptions used in this catalogue are for reference purposes only.

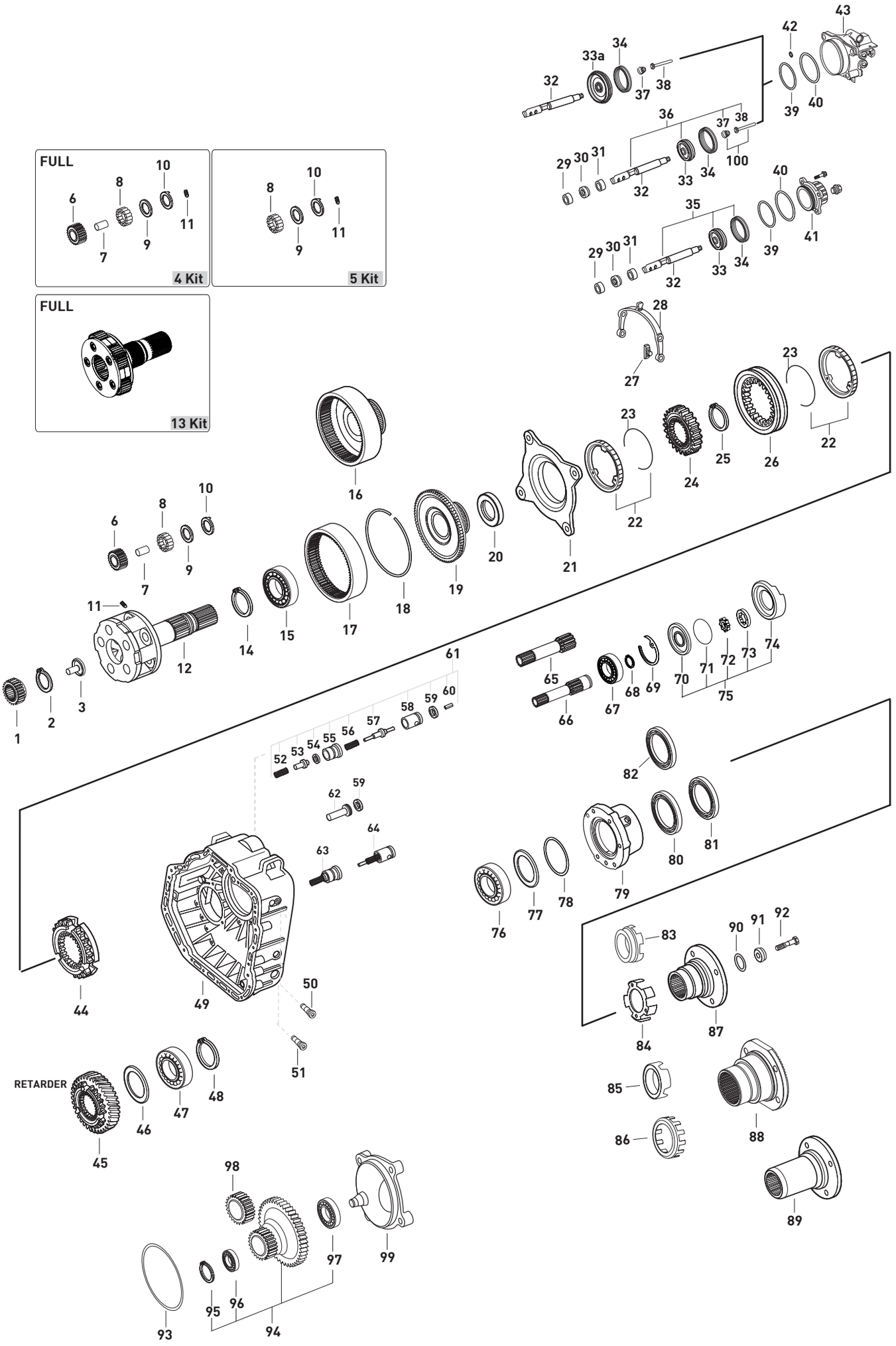




Original parts names, oem numbers, symbols and descriptions used in this catalogue are for reference purposes only.

| Fig. | Kacmaz No | Oem No | Oem Old No | Pcs. | Ürün Tanımı | Description | Sizes | Not | 715507 | 715508 |
|---|---|---|---|---|---|---|---|---|---|---|
| 63 | K21.06953 | 960 260 1057 | | Kit | YAĞ BASINÇ VALFİ KOMPLE | VALVE KIT | | | ♦ | |
| 63 | K21.06988 | 960 260 2257 | | Kit | YAĞ BASINÇ VALFİ KOMPLE | VALVE KIT | | | | ♦ |
| 64 | K21.06973 | 960 260 1257 | | Kit | YAĞ BASINÇ VALFİ KOMPLE | VALVE KIT | | | ♦ | |
| 64 | K21.06989 | 960 260 2157 | (960 260 3757) | Kit | YAĞ BASINÇ VALFİ KOMPLE | VALVE KIT | | | | ♦ |
| 65 | K21.03085 | 947 264 0005 | (389 269 0310) | 1 | YAĞ POMPA MİLİ | OIL PUMP SHAFT | | (3) | ♦ | |
| | | | (389 269 1210) | | | | | | | |
| 65 | K21.06969 | 960 264 0105 | | 1 | YAĞ POMPA MİLİ | OIL PUMP SHAFT | | (3) | | ♦ |
| 66 | K21.03198 | 947 269 1010 | (945 269 1010) | 1 | YAĞ POMPA MİLİ | OIL PUMP SHAFT | | (4) | ♦ | |
| 66 | K21.06298 | 947 269 1110 | (945 269 1110) | 1 | YAĞ POMPA MİLİ | OIL PUMP SHAFT | | (4) | ♦ | |
| 67 | K21.03613 | 004 981 8625 | (004 981 9025) | 1 | PTO MİL BİLYASI | ROLLER BEARING | 45X75X16mm | (3) | ♦ | |
| | | | (006 981 8225) | | | | | | | |
| 67 | K21.03648 | 010 981 9025 | (010 981 8425) | 1 | PTO MİL BİLYASI | ROLLER BEARING | 17X35X10mm | (4) | ♦ | |
| | | | (008 981 5425) | | | | | | | |
| | | | (008 981 3425) | | | | | | | |
| 68 | K21.06964 | 000471 045000 | (003 994 3741) | 1 | PTO MİL BİLYA SEKMANI | RETAINING RING | 1,75mm | (3) | ♦ | ♦ |
| 68 | | 912009 045100 | | 1 | PTO MİL BİLYA SEKMANI | RETAINING RING | | (4) | ♦ | |
| 69 | K21.94304 | | | 1 | YAĞ POMPA PULU | SPACER WASHER | 0,70mm | | ♦ | ♦ |
| 69 | K21.04304 | 389 262 6254 | | 1 | YAĞ POMPA PULU | SPACER WASHER | 0,80mm | | ♦ | ♦ |
| 69 | K21.04303 | 389 262 5954 | | 1 | YAĞ POMPA PULU | SPACER WASHER | 0,90mm | | ♦ | ♦ |
| 69 | K21.04302 | 389 262 5754 | | 1 | YAĞ POMPA PULU | SPACER WASHER | 1,00mm | | ♦ | ♦ |
| 69 | K21.04301 | 389 262 5554 | | 1 | YAĞ POMPA PULU | SPACER WASHER | 1,10mm | | ♦ | ♦ |
| 69 | K21.04305 | 389 262 5354 | | 1 | YAĞ POMPA PULU | SPACER WASHER | 1,20mm | | ♦ | ♦ |
| 70 | K21.03558 | 947 264 0287 | | 1 | YAĞ POMPA KAPAĞI | OIL PUMP COVER | | PTO | ♦ | |
| 70 | | 947 264 0487 | | 1 | YAĞ POMPA KAPAĞI | OIL PUMP COVER | | PTO | | ♦ |
| 70 | K21.03412 | 945 269 0201 | (389 269 2501) | 1 | YAĞ POMPA KAPAĞI | OIL PUMP COVER | | | ♦ | |
| 71 | K21.03511 | 029 997 5748 | | 1 | YAĞ POMPA ORİNGİ | O-RING | 112X2,5mm | | ♦ | ♦ |
| 72 | K21.03413 | 389 269 1406 | (389 269 1506) | 1 | YAĞ POMPA İÇ ROTOR | OIL PUMP GEAR | | | ♦ | ♦ |
| | | | (945 260 0090) | | | | | | | |
| 73 | K21.03414 | 389 269 0706 | (389 269 1206) | 1 | YAĞ POMPA DIŞ ROTOR | ROTOR | | | ♦ | ♦ |
| 74 | K21.03478 | 947 269 1001 | | 1 | YAĞ POMPA GÖVDESİ | OIL PUMP HOUSING | | (M) | ♦ | ♦ |
| 74 | K21.03415 | 389 269 3801 | | 1 | YAĞ POMPA GÖVDESİ | OIL PUMP HOUSING | | (N) | ♦ | |
| 75 | K21.03475 | 389 260 0790 | | 1 | YAĞ POMPASI | OIL PUMP | | (M) | ♦ | ♦ |
| 75 | K21.03411 | 389 260 0690 | (389 260 0590) | 1 | YAĞ POMPASI | OIL PUMP | | (N) | ♦ | |
| 76 | K21.03625 | 008 981 3025 | (008 981 5225) | 1 | ŞANZIMAN ARKA BİLYA | ROLLER BEARING | 80x150x28mm | | ♦ | ♦ |
| | | | (007 981 3325) | | | | | | | |
| 77 | K21.04081 | 389 262 7754 | | 1 | ŞANZIMAN HEYKEL AYAR PULU | THRUST WASHER | 1,40mm | | ♦ | |
| 77 | K21.04139 | 389 262 5152 | | 1 | ŞANZIMAN HEYKEL AYAR PULU | THRUST WASHER | 0,80mm | | ♦ | |
| 77 | K21.04080 | 389 262 5052 | | 1 | ŞANZIMAN HEYKEL AYAR PULU | THRUST WASHER | 0,40mm | | ♦ | |
| 77 | K21.04079 | 389 262 7654 | | 1 | ŞANZIMAN HEYKEL AYAR PULU | THRUST WASHER | 0,25mm | | ♦ | |
| 77 | K21.04140 | 389 262 4952 | | 1 | ŞANZIMAN HEYKEL AYAR PULU | THRUST WASHER | 0,20mm | | ♦ | |
| 77 | K21.04141 | 389 262 4852 | | 1 | ŞANZIMAN HEYKEL AYAR PULU | THRUST WASHER | 0,15mm | | ♦ | |
| 77 | K21.04078 | 389 262 4752 | | 1 | ŞANZIMAN HEYKEL AYAR PULU | THRUST WASHER | 0,10mm | | ♦ | |
| 78 | K21.06713 | 015 997 2848 | (020 997 8548) | 1 | ŞANZIMAN ARKA KAPAK ORİNGİ | O-RING | 149,5X3mm | | ♦ | |
| 79 | K21.06238 | 389 261 1920 | (389 261 2020) | 1 | ŞANZIMAN ARKA KAPAK | COVER | | | ♦ | |
| 80 | K21.03507 | 013 997 7347 | (015 997 4247) | 1 | ŞANZIMAN ARKA KEÇE | OIL SEAL | 95X115X13/12mm | | ♦ | |
| | | | (013 997 5647) | | | | | | | |
| 81 | K21.03528 | 013 997 7247 | (014 997 1947) | 1 | ŞANZIMAN ARKA KEÇE | OIL SEAL | 95X115X13mm | | ♦ | |
| | | | (013 997 5547) | | | | | | | |
| 82 | K21.03512 | 015 997 7846 | (023 997 1647) | 1 | ŞANZIMAN ARKA KEÇE | OIL SEAL | 95X115X15,5mm | | ♦ | ♦ |
| 83 | | 945 262 0628 | (389 260 0350) | 1 | ŞANZIMAN KM DEVİR SACI | PULSE STAR | | (8) | ♦ | |
| 84 | K21.04134 | 930 262 0028 | | 1 | ŞANZIMAN KM DEVİR SACI | PULSE STAR | | (6)(7)(10) | ♦ | |
| 84 | | 945 262 0228 | | 1 | ŞANZIMAN KM DEVİR SACI | PULSE STAR | | (9) | ♦ | |
| 85 | | 945 262 0528 | (389 260 0150) | 1 | ŞANZIMAN KM DEVİR SACI | PULSE STAR | | (5) | ♦ | |

NOTES :
Parts encoded alphabetic and numaric are used together.

NOTLAR :
Alfabetik ve rakam ile kodlanan parçalar birlikte kullanılır.





Original parts names, oem numbers, symbols and descriptions used in this catalogue are for reference purposes only.

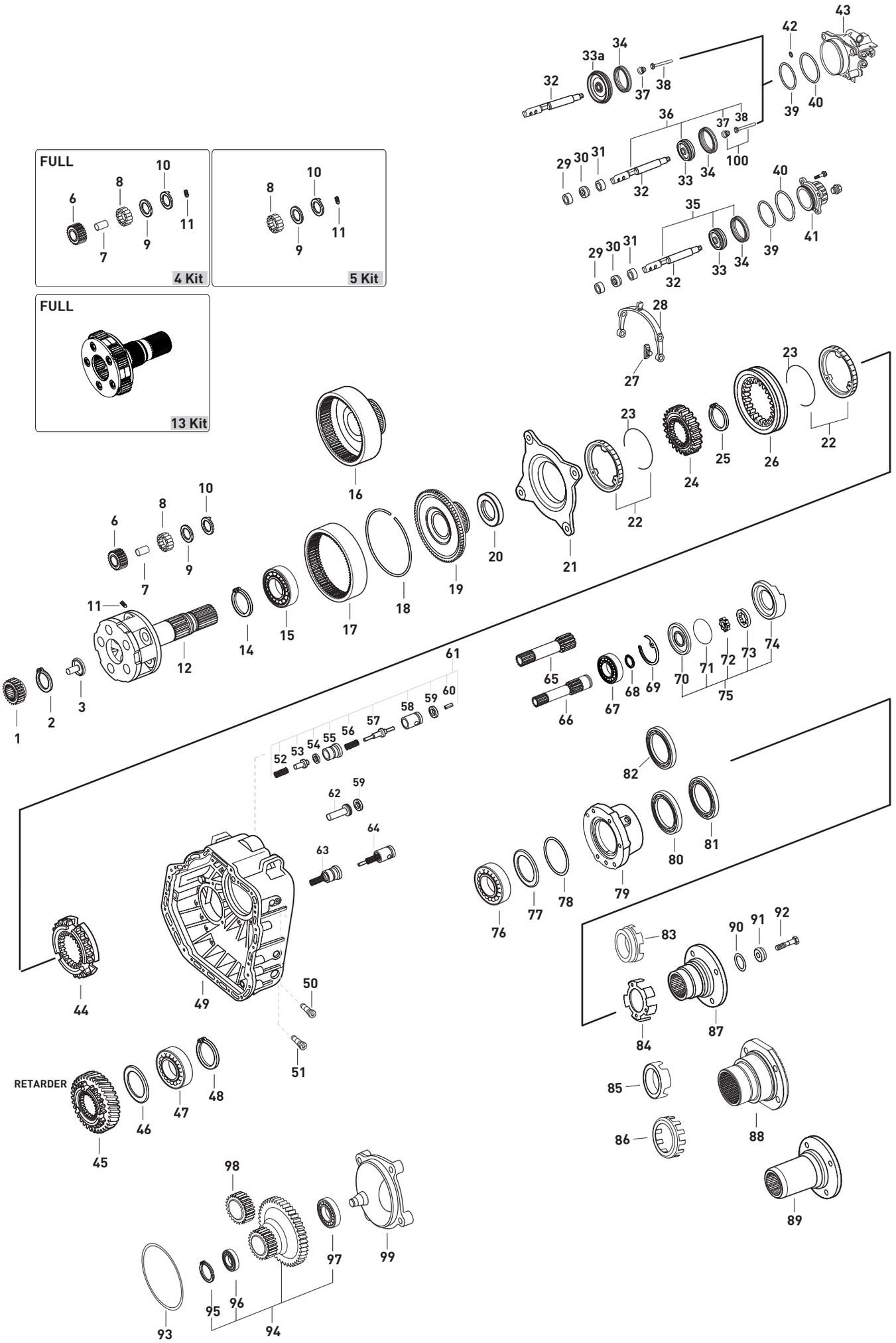




Original parts names, oem numbers, symbols and descriptions used in this catalogue are for reference purposes only.

| Fig. | Kacmaz No | Oem No | Oem Old No | Pcs. | Ürün Tanımı | Description | Sizes | Not | 715507 | 715508 |
|---|---|---|---|---|---|---|---|---|---|---|
| 86 | K21.06947 | 930 262 1428 | (930 262 0128) | 1 | ŞANZIMAN KM DEVİR SACI | PULSE STAR | | (11) | | ♦ |
| 87 | K21.03084 | 389 262 0445 | | 1 | ŞANZIMAN FLANŞI | COMPANION FLANGE | 4-H, Ø180mm | (5) | ♦ | |
| 87 | K21.03196 | 945 262 0045 | | 1 | ŞANZIMAN FLANŞI | COMPANION FLANGE | 4-H, Ø180mm | (6) | ♦ | |
| 88 | K21.03211 | 930 262 0045 | | 1 | ŞANZIMAN FLANŞI | COMPANION FLANGE | 4-H, Ø180mm | (7) | ♦ | |
| 88 | | 389 262 0545 | | 1 | ŞANZIMAN FLANŞI | COMPANION FLANGE | 4-H, Ø180mm | (8) | ♦ | |
| 88 | K21.03129 | 389 262 0645 | | 1 | ŞANZIMAN FLANŞI | COMPANION FLANGE | 4-H, Ø200mm | (9) | ♦ | |
| 88 | K21.03195 | 930 262 0145 | | 1 | ŞANZIMAN FLANŞI | COMPANION FLANGE | Ø200mm | (10) | ♦ | |
| 88 | K21.06052 | 945 262 0245 | | 1 | ŞANZIMAN FLANŞI | COMPANION FLANGE | 4-H, Ø200mm | (9)(11) | | ♦ |
| 89 | | 387 264 1945 | | 1 | ŞANZIMAN FLANŞI | COMPANION FLANGE | Ø198mm | | ♦ | |
| 89 | | 387 264 2045 | | 1 | ŞANZIMAN FLANŞI | COMPANION FLANGE | Ø198mm | | ♦ | |
| 89 | | 945 262 0445 | | 1 | ŞANZIMAN FLANŞI | COMPANION FLANGE | Ø200mm | | ♦ | |
| 89 | | 945 262 0545 | | 1 | ŞANZIMAN FLANŞI | COMPANION FLANGE | Ø200mm | | ♦ | |
| 90 | K21.04310 | 014 997 5148 | (020 997 8648) | 1 | ŞANZIMAN FLANŞ ORİNGİ | O-RING | 72,4X5,3mm | | ♦ | |
| 90 | | 025 997 5345 | | 1 | ŞANZIMAN FLANŞ ORİNGİ | O-RING | 70,8x5,1mm | | | ♦ |
| 90 | K21.06978 | 015 997 4348 | | 1 | ŞANZIMAN FLANŞ ORİNGİ | O-RING | 25X3mm | (M) | ♦ | ♦ |
| 91 | K21.04214 | 945 262 0762 | | 1 | ŞANZIMAN FLANŞI ALIN PULU | THRUST WASHER | 93X20mm | (K) | ♦ | ♦ |
| 91 | K21.06977 | 389 262 0362 | (945 262 0062) | 1 | ŞANZIMAN FLANŞI ALIN PULU | THRUST WASHER | 95X24mm | (L) | ♦ | |
| 91 | K21.06283 | 387 264 1162 | | 1 | ŞANZIMAN FLANŞI ALIN PULU | THRUST WASHER | | (M) | ♦ | ♦ |
| 92 | K21.06280 | 000000 006750 | (000000 005728) | 1 | ŞANZIMAN FLANŞI ALIN VİDASI | SCREW | M20X1,5X80 | (K) | ♦ | ♦ |
| 92 | K21.06028 | 945 990 0019 | (389 990 2019) | 1 | ŞANZIMAN FLANŞI ALIN VİDASI | SCREW | M24X2X85 | (L) | ♦ | |
| | | | (389 990 0219) | | | | | | | |
| 92 | K21.06281 | 387 990 1719 | | 1 | ŞANZIMAN FLANŞI ALIN VİDASI | SCREW | M24X2X95 | (M) | ♦ | ♦ |
| 93 | | 017 997 9145 | (028 997 8148) | 1 | ŞANZIMAN ARKA KAPAK ORİNGİ | O-RING | 198X3mm | | ♦ | |
| 94 | K21.06311 | 930 264 0921 | | 1 | DİREKSİYON POMPA DİŞLİSİ | GEAR | | | ♦ | |
| 95 | | 000983 020000 | | 1 | DİR.POMPA DİŞLİ BİLYA SEKMANI | RETAINING RING | | | ♦ | |
| 96 | | 000625 006004 | | 1 | DİREKSİYON POMPA DİŞLİ ÖN BİLYA | ROLLER BEARING | | | ♦ | |
| 97 | | 000625 506007 | | 1 | DİREKSİYON POMPA DİŞLİ ARKA BİLYA | ROLLER BEARING | | | ♦ | |
| 98 | K21.03671 | 930 264 0721 | | 1 | DİREKSİYON POMPA DİŞLİ KARŞILIĞI | GEAR | | | ♦ | |
| 99 | K21.06300 | 930 264 0111 | (930 264 0211) | 1 | DİREKSİYON POMPA KAPAĞI | HOUSING | | | ♦ | |
| 100 | K21.07049 | 960 543 0285 | | Kit | OKUYUCU MİL-YAY TAKIMI | REPAIR KIT | | | ♦ | |

NOTES :
Parts encoded alphabetic and numaric are used together.

NOTLAR :
Alfabetik ve rakam ile kodlanan parçalar birlikte kullanılır.





Original parts names, oem numbers, symbols and descriptions used in this catalogue are for reference purposes only.

SYNCHRONIZER KIT CONST.
NEW MODEL

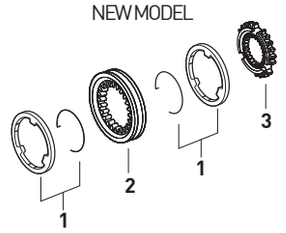


| Fig. | Kacmaz No. | Oem No | Oem Old No | Pcs. | Ürün Tanımı | Description |
|---|---|---|---|---|---|---|
| | K21.06208 | | | Kit | TAK.SENKROMENÇ KİT | SYNCHRONIZER KIT Const |
| 1 | K21.03136 | 945 260 2245 | (946 262 6337) | 2 | TAKVİYE FRENLEME (Mo) | SYNCHRONIZING CONE / Mo |
| 2 | K21.03137 | 945 262 6823 | (945 262 6423) | 1 | TAKVİYE HALKA | ENGAGING SLEEVE |
| 3 | K21.03147 | 945 262 7734 | (945 262 3634) | 1 | TAKVİYE SENKROMENÇ | ENGAGING RING |

SYNCHRONIZER KIT CONST.
OLD MODEL

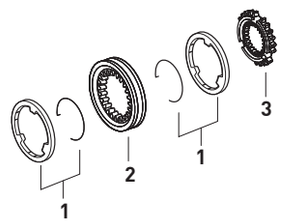


| Fig. | Kacmaz No. | Oem No | Oem Old No | Pcs. | Ürün Tanımı | Description |
|---|---|---|---|---|---|---|
| | K21.06209 | | | Kit | TAK.SENKROMENÇ KİT | SYNCHRONIZER KIT Const |
| 1 | K21.03015 | 389 262 0637 | (387 262 0837) | 2 | TAKVİYE FRENLEME (Mo) | SYNCHRONIZING CONE / Mo |
| 2 | K21.03002 | 945 262 2823 | (945 262 0323) | 1 | TAKVİYE HALKA | ENGAGING SLEEVE |
| | | | (945 262 0623) | | | |
| | | | (389 262 4123) | | | |
| | | | (389 262 2723) | | | |
| 3 | K21.03024 | 389 262 5434 | (945 262 0334) | 1 | TAKVİYE SENKROMENÇ | ENGAGING RING |
| | | | (945 262 0134) | | | |

SYNCHRONIZER KIT 3rd/4th
NEW MODEL

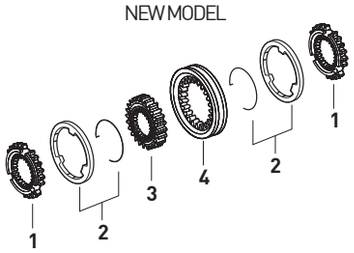


| Fig. | Kacmaz No. | Oem No | Oem Old No | Pcs. | Ürün Tanımı | Description |
|---|---|---|---|---|---|---|
| | K21.06211 | | | Kit | 3./4.VİTES SENK.KİT | SYNCH.KIT 3rd/4th |
| 1 | K21.03146 | 945 262 8234 | (945 262 5434) | 2 | 3./4.VİTES SENKROMENÇ | ENGAGING RING |
| 2 | K21.03148 | 947 260 1945 | (947 260 4645) | 2 | 3./4.VİTES FRENLEME (Mo) | SYNCHRONIZING CONE / Mo |
| | | | (946 262 6137) | | | |
| 3 | K21.03149 | 389 262 4735 | (389 262 4635) | 1 | 3./4.VİTES YILDIZ DİŞLİ | SYNCHRONIZER HUB |
| 4 | K21.03151 | 945 262 6523 | (930 262 0523) | 1 | 3./4.VİTES HALKA | ENGAGING SLEEVE |

SYNCHRONIZER KIT 3rd/4th
NEW MODEL

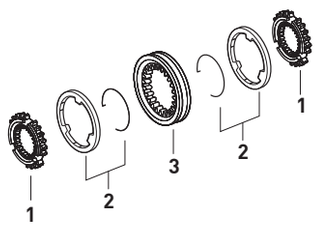


| Fig. | Kacmaz No. | Oem No | Oem Old No | Pcs. | Ürün Tanımı | Description |
|---|---|---|---|---|---|---|
| | K21.06512 | | | Kit | 3./4.VİTES SENK.KİT | SYNCH.KIT 3rd/4th |
| 1 | K21.03146 | 945 262 8234 | (945 262 5434) | 2 | 3./4.VİTES SENKROMENÇ | ENGAGING RING |
| 2 | K21.03148 | 947 260 1945 | (947 260 4645) | 2 | 3./4.VİTES FRENLEME (Mo) | SYNCHRONIZING CONE / Mo |
| | | | (946 262 6137) | | | |
| 3 | K21.03151 | 945 262 6523 | (930 262 0523) | 1 | 3./4.VİTES HALKA | ENGAGING SLEEVE |

SYNCHRONIZER KIT 3rd/4th
OLD MODEL

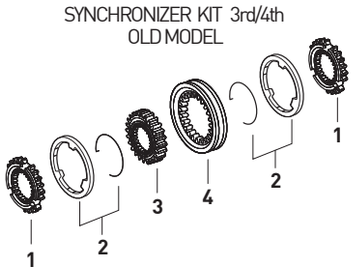


| Fig. | Kacmaz No. | Oem No | Oem Old No | Pcs. | Ürün Tanımı | Description |
|---|---|---|---|---|---|---|
| | K21.06212 | | | Kit | 3./4.VİTES SENK.KİT | SYNCH.KIT 3rd/4th |
| 1 | K21.03027 | 945 262 0534 | (389 262 5034) | 2 | 3./4.VİTES SENKROMENÇ | ENGAGING RING |
| 2 | K21.03016 | 389 262 0737 | (387 262 0937) | 2 | 3./4.VİTES FRENLEME (Mo) | SYNCHRONIZING CONE / Mo |
| 3 | K21.03149 | 389 262 4735 | (389 262 4635) | 1 | 3./4.VİTES YILDIZ DİŞLİ | SYNCHRONIZER HUB |
| 4 | K21.03009 | 945 262 2723 | (945 262 0423) | 1 | 3./4.VİTES HALKA | ENGAGING SLEEVE |
| | | | (389 262 2623) | | | |

SYNCHRONIZER KIT 3rd/4th
OLD MODEL

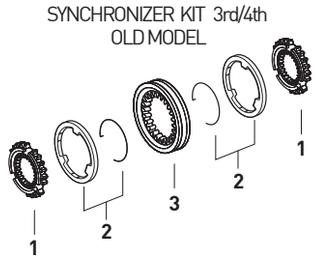


| Fig. | Kacmaz No. | Oem No | Oem Old No | Pcs. | Ürün Tanımı | Description |
|---|---|---|---|---|---|---|
| | K21.06514 | | | Kit | 3./4.VİTES SENK.KİT | SYNCH.KIT 3rd/4th |
| 1 | K21.03027 | 945 262 0534 | (389 262 5034) | 2 | 3./4.VİTES SENKROMENÇ | ENGAGING RING |
| 2 | K21.03016 | 389 262 0737 | (387 262 0937) | 2 | 3./4.VİTES FRENLEME (Mo) | SYNCHRONIZING CONE / Mo |
| 3 | K21.03009 | 945 262 2723 | (945 262 0423) | 1 | 3./4.VİTES HALKA | ENGAGING SLEEVE |
| | | | (389 262 2623) | | | |

SYNCHRONIZER KIT 1st/2nd
NEW MODEL

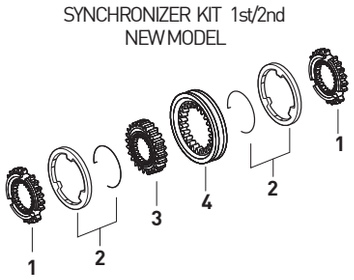


| Fig. | Kacmaz No. | Oem No | Oem Old No | Pcs. | Ürün Tanımı | Description |
|---|---|---|---|---|---|---|
| | K21.06214 | | | Kit | 1./2.VİTES SENK.KİT | SYNCH.KIT 1st/2nd |
| 1 | K21.03160 | 945 262 5534 | | 2 | 1./2.VİTES SENKROMENÇ | ENGAGING RING |
| 2 | K21.03148 | 947 260 1945 | (947 260 4645) | 2 | 1./2.VİTES FRENLEME (Mo) | SYNCHRONIZING CONE / Mo |
| | | | (946 262 6137) | | | |
| 3 | K21.03161 | 389 262 2535 | (945 262 0135) | 1 | 1./2.VİTES YILDIZ DİŞLİ | SYNCHRONIZER HUB |
| 4 | K21.03151 | 945 262 6523 | (930 262 0523) | 1 | 1./2.VİTES HALKA | ENGAGING SLEEVE |



**Original parts names, oem numbers, symbols and descriptions used in this catalogue are for reference purposes only.**

| Fig. | Kacmaz No. | Oem No | Oem Old No | Pcs. | Ürün Tanımı | Description |
|---|---|---|---|---|---|---|
| | K21.06516 | | | Kit | 1./2.VİTES SENK.KİT | SYNCH.KIT 1st/2nd |
| 1 | K21.03160 | 945 262 5534 | | 2 | 1./2.VİTES SENKROMENÇ | ENGAGING RING |
| 2 | K21.03148 | 947 260 1945 | (947 260 4645) | 2 | 1./2.VİTES FRENLEME (Mo) | SYNCHRONIZING CONE / Mo |
| | | | (946 262 6137) | | | |
| 3 | K21.03151 | 945 262 6523 | (930 262 0523) | 1 | 1./2.VİTES HALKA | ENGAGING SLEEVE |

SYNCHRONIZER KIT 1st/2nd
NEW MODEL

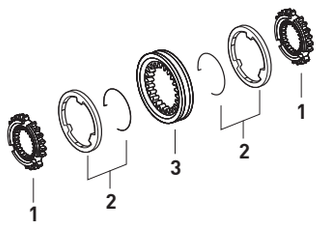


| Fig. | Kacmaz No. | Oem No | Oem Old No | Pcs. | Ürün Tanımı | Description |
|---|---|---|---|---|---|---|
| | K21.06215 | | | Kit | 1./2.VİTES SENK.KİT | SYNCH.KIT 1st/2nd |
| 1 | K21.03025 | 945 262 0434 | (389 262 0034) | 2 | 1.VİTES SENKROMENÇ | ENGAGING RING |
| 2 | K21.03016 | 389 262 0737 | (387 262 0937) | 2 | 1./2.VİT.FRENLEME (Mo) | SYNCHRONIZING CONE / Mo |
| 3 | K21.03161 | 389 262 2535 | (945 262 0135) | 1 | 1./2.VİTES YILDIZ DİŞLİ | SYNCHRONIZER HUB |
| 4 | K21.03009 | 945 262 2723 | (945 262 0423) | 1 | 1./2.VİTES HALKA | ENGAGING SLEEVE |
| | | | (389 262 2623) | | | |

SYNCHRONIZER KIT 1st/2nd
OLD MODEL

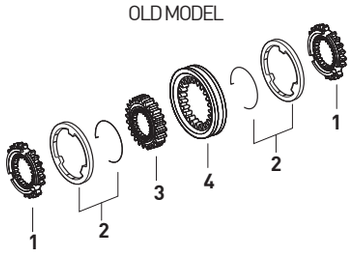


| Fig. | Kacmaz No. | Oem No | Oem Old No | Pcs. | Ürün Tanımı | Description |
|---|---|---|---|---|---|---|
| | K21.06387 | | | Kit | 1./2.VİTES SENK.KİT | SYNCH.KIT 1st/2nd |
| 1 | K21.03025 | 945 262 0434 | (389 262 0034) | 1 | 1.VİTES SENKROMENÇ | ENGAGING RING |
| 2 | K21.03016 | 389 262 0737 | (387 262 0937) | 2 | 1./2.VİT.FRENLEME (Mo) | SYNCHRONIZING CONE / Mo |
| 3 | K21.03161 | 389 262 2535 | (945 262 0135) | 1 | 1./2.VİTES YILDIZ DİŞLİ | SYNCHRONIZER HUB |
| 4 | K21.03009 | 945 262 2723 | (945 262 0423) | 1 | 1./2.VİTES HALKA | ENGAGING SLEEVE |
| | | | (389 262 2623) | | | |

SYNCHRONIZER KIT 1st/2nd

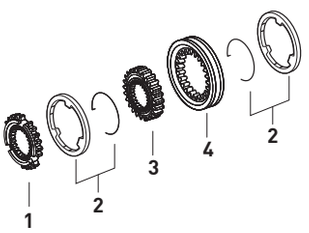


| Fig. | Kacmaz No. | Oem No | Oem Old No | Pcs. | Ürün Tanımı | Description |
|---|---|---|---|---|---|---|
| | K21.06517 | | | Kit | 1./2.VİTES SENK.KİT | SYNCH.KIT 1st/2nd |
| 1 | K21.03025 | 945 262 0434 | (389 262 0034) | 2 | 1./2.VİTES SENKROMENÇ | ENGAGING RING |
| 2 | K21.03016 | 389 262 0737 | (387 262 0937) | 2 | 1./2.VİT.FRENLEME (Mo) | SYNCHRONIZING CONE / Mo |
| 3 | K21.03009 | 945 262 2723 | (945 262 0423) | 1 | 1./2.VİTES HALKA | ENGAGING SLEEVE |
| | | | (389 262 2623) | | | |

SYNCHRONIZER KIT 1st/2nd
OLD MODEL

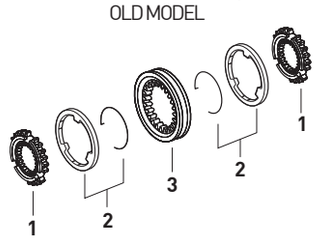


| Fig. | Kacmaz No. | Oem No | Oem Old No | Pcs. | Ürün Tanımı | Description |
|---|---|---|---|---|---|---|
| | K21.06216 | | | Kit | AĞIR SERİ SENK.KİT | SYNCH.KIT PLANETARY |
| 1 | K21.03037 | 947 260 3036 | (947 260 0836) | 1 | TABLA SENKROMENÇ | FOLLOWER RING |
| 2 | K21.03185 | 947 260 0945 | | 2 | AĞIR SERİ FRENLEME (Mo) | SYNCHRONIZING CONE / Mo |
| 3 | K21.03079 | 389 262 4935 | (389 262 2035) | 1 | A.SERİ YILDIZ DİŞLİ 73 DİŞ | SYNCHRONIZER HUB 73 T. |
| 4 | K21.03033 | 945 262 6923 | (930 262 0623) | 1 | AĞIR SERİ HALKA | ENGAGING SLEEVE |
| 5 | K21.03431 | 960 265 0049 | (947 265 0349) | 2 | A.SERİ HİLAL PABUCU | SLIDING PAD |
| 6 | K21.03186 | 945 262 3834 | | 1 | SERİ SENKROMENÇ | ENGAGING RING |

SYNCHRONIZER KIT PLANETARY
NEW MODEL

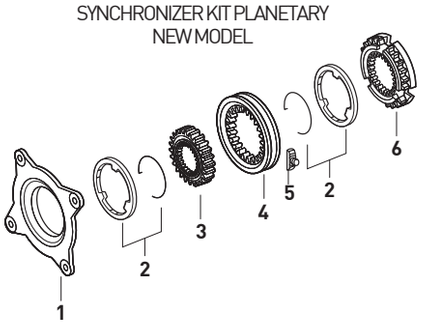


| Fig. | Kacmaz No. | Oem No | Oem Old No | Pcs. | Ürün Tanımı | Description |
|---|---|---|---|---|---|---|
| | K21.06518 | | | Kit | AĞIR SERİ.SENK.KİT | SYNCH.KIT PLANETARY |
| 1 | K21.03037 | 947 260 3036 | (947 260 0836) | 1 | TABLA SENKROMENÇ | FOLLOWER RING |
| 2 | K21.03185 | 947 260 0945 | | 2 | AĞIR SERİ FRENLEME (Mo) | SYNCHRONIZING CONE / Mo |
| 3 | K21.03033 | 945 262 6923 | (930 262 0623) | 1 | AĞIR SERİ HALKA | ENGAGING SLEEVE |
| 4 | K21.03431 | 960 265 0049 | (947 265 0349) | 2 | A.SERİ HİLAL PABUCU | SLIDING PAD |
| 5 | K21.03186 | 945 262 3834 | | 1 | SERİ SENKROMENÇ | ENGAGING RING |

SYNCHRONIZER KIT PLANETARY
NEW MODEL

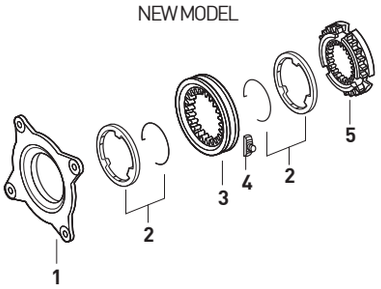




Original parts names, oem numbers, symbols and descriptions used in this catalogue are for reference purposes only.

SYNCHRONIZER KIT PLANETARY
NEW MODEL

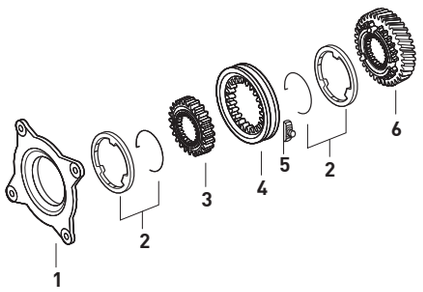


| Fig. | Kacmaz No. | Oem No | Oem Old No | Pcs. | Ürün Tanımı | Description |
|---|---|---|---|---|---|---|
| | K21.06388 | | | Kit | AĞIR SERİ.SENK.KİT | SYNCH.KIT PLANETARY |
| 1 | K21.03037 | 947 260 3036 | (947 260 0836) | 1 | TABLA SENKROMENÇ | FOLLOWER RING |
| 2 | K21.03185 | 947 260 0945 | | 2 | AĞIR SERİ FRENLEME (Mo) | SYNCHRONIZING CONE / Mo |
| 3 | K21.03079 | 389 262 4935 | (389 262 2035) | 1 | A.SERİ YILDIZ DİŞLİ 73 DİŞ | SYNCHRONIZER HUB 73 T. |
| 4 | K21.03033 | 945 262 6923 | (930 262 0623) | 1 | AĞIR SERİ HALKA | ENGAGING SLEEVE |
| 5 | K21.03431 | 960 265 0049 | (947 265 0349) | 2 | A.SERİ HİLAL PABUCU | SLIDING PAD |
| 6 | K21.03188 | 930 264 0320 | | 1 | RETARDER DİŞLİSİ 64 DİŞ | RETARDER GEAR 64 T. |

SYNCHRONIZER KIT PLANETARY
NEW MODEL

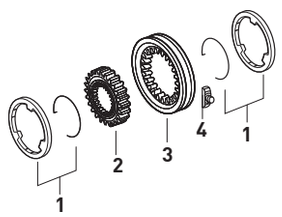


| Fig. | Kacmaz No. | Oem No | Oem Old No | Pcs. | Ürün Tanımı | Description |
|---|---|---|---|---|---|---|
| | K21.06204 | | | Kit | AĞIR SERİ SENK.KİT | SYNCH.KIT PLANETARY |
| 1 | K21.03185 | 947 260 0945 | | 2 | AĞIR SERİ FRENLEME (Mo) | SYNCHRONIZING CONE / Mo |
| 2 | K21.03079 | 389 262 4935 | (389 262 2035) | 1 | A.SERİ YILDIZ DİŞLİ 73 DİŞ | SYNCHRONIZER HUB 73 T. |
| 3 | K21.03033 | 945 262 6923 | (930 262 0623) | 1 | AĞIR SERİ HALKA | ENGAGING SLEEVE |
| 4 | K21.03431 | 960 265 0049 | (947 265 0349) | 2 | A.SERİ HİLAL PABUCU | SLIDING PAD |

SYNCHRONIZER KIT PLANETARY
NEW MODEL

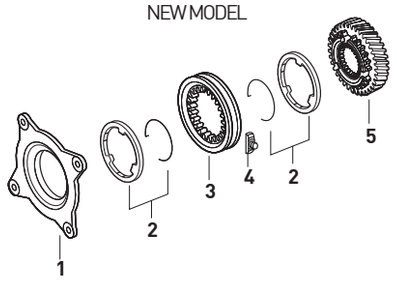


| Fig. | Kacmaz No. | Oem No | Oem Old No | Pcs. | Ürün Tanımı | Description |
|---|---|---|---|---|---|---|
| | K21.06442 | | | Kit | AĞIR SERİ.SENK.KİT | SYNCH.KIT PLANETARY |
| 1 | K21.03037 | 947 260 3036 | (947 260 0836) | 1 | TABLA SENKROMENÇ | FOLLOWER RING |
| 2 | K21.03185 | 947 260 0945 | | 2 | AĞIR SERİ FRENLEME (Mo) | SYNCHRONIZING CONE / Mo |
| 3 | K21.03033 | 945 262 6923 | (930 262 0623) | 1 | AĞIR SERİ HALKA | ENGAGING SLEEVE |
| 4 | K21.03431 | 960 265 0049 | (947 265 0349) | 2 | A.SERİ HİLAL PABUCU | SLIDING PAD |
| 5 | K21.03188 | 930 264 0320 | | 1 | RETARDER DİŞLİSİ 64 DİŞ | RETARDER GEAR 64 T. |

SYNCHRONIZER KIT PLANETARY
OLD TYPE

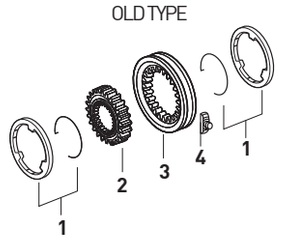


| Fig. | Kacmaz No. | Oem No | Oem Old No | Pcs. | Ürün Tanımı | Description |
|---|---|---|---|---|---|---|
| | K21.06194 | | | Kit | AĞIR SERİ.SENK.KİT | SYNCH.KIT PLANETARY |
| 1 | K21.03017 | 389 262 0537 | (389 262 0037) | 2 | AĞIR SERİ FRENLEME (Mo) | SYNCHRONIZING CONE / Mo |
| 2 | K21.03079 | 389 262 4935 | (389 262 2035) | 1 | A.SERİ YILDIZ DİŞLİ 73 DİŞ | SYNCHRONIZER HUB 73 T. |
| 3 | K21.03028 | 945 262 6623 | (945 262 0823) | 1 | AĞIR SERİ HALKA 73 DİŞ | ENGAGING SLEEVE 73 T. |
| 4 | K21.03406 | 389 265 2449 | (389 265 1249) | 2 | A.SERİ HİLAL PABUCU | SLIDING PAD |

SYNCHRONIZER KIT PLANETARY
OLD TYPE

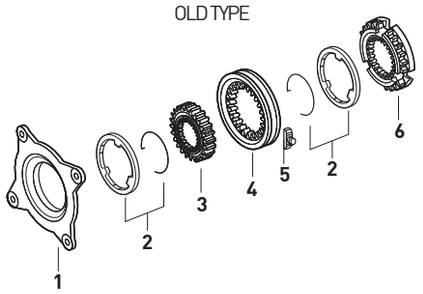


| Fig. | Kacmaz No. | Oem No | Oem Old No | Pcs. | Ürün Tanımı | Description |
|---|---|---|---|---|---|---|
| | K21.06217 | | | Kit | AĞIR SERİ.SENK.KİT | SYNCH.KIT PLANETARY |
| 1 | K21.03018 | 389 260 2036 | | 1 | TABLA SENKROMENÇ | FOLLOWER RING |
| 2 | K21.03017 | 389 262 0537 | (389 262 0037) | 2 | AĞIR SERİ FRENLEME (Mo) | SYNCHRONIZING CONE / Mo |
| 3 | K21.03079 | 389 262 4935 | (389 262 2035) | 1 | A.SERİ YILDIZ DİŞLİ 73 DİŞ | SYNCHRONIZER HUB 73 T. |
| 4 | K21.03028 | 945 262 6623 | (945 262 0823) | 1 | AĞIR SERİ HALKA 73 DİŞ | ENGAGING SLEEVE 73 T. |
| 5 | K21.03406 | 389 265 2449 | (389 265 1249) | 2 | A.SERİ HİLAL PABUCU | SLIDING PAD |
| 6 | K21.03187 | 389 262 9234 | (945 262 1234) | 1 | SERİ SENKROMENÇ | ENGAGING RING |

SYNCHRONIZER KIT PLANETARY

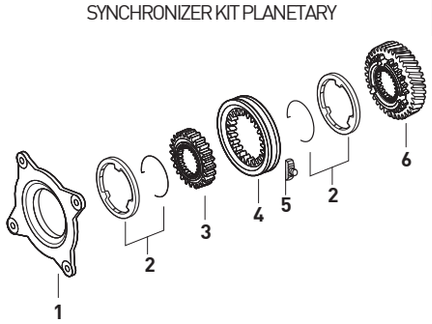


| Fig. | Kacmaz No. | Oem No | Oem Old No | Pcs. | Ürün Tanımı | Description |
|---|---|---|---|---|---|---|
| | K21.06389 | | | Kit | AĞIR SERİ.SENK.KİT | SYNCH.KIT PLANETARY |
| 1 | K21.03018 | 389 260 2036 | | 1 | TABLA SENKROMENÇ | FOLLOWER RING |
| 2 | K21.03017 | 389 262 0537 | (389 262 0037) | 2 | AĞIR SERİ FRENLEME (Mo) | SYNCHRONIZING CONE / Mo |
| 3 | K21.03079 | 389 262 4935 | (389 262 2035) | 1 | A.SERİ YILDIZ DİŞLİ 73 DİŞ | SYNCHRONIZER HUB 73 T. |
| 4 | K21.03028 | 945 262 6623 | (945 262 0823) | 1 | AĞIR SERİ HALKA 73 DİŞ | ENGAGING SLEEVE 73 T. |
| 5 | K21.03406 | 389 265 2449 | (389 265 1249) | 2 | A.SERİ HİLAL PABUCU | SLIDING PAD |
| 6 | K21.06050 | 945 264 0130 | (389 264 0730) | 1 | RETARDER DİŞLİSİ | RETARDER GEAR |



**Original parts names, oem numbers, symbols and descriptions used in this catalogue are for reference purposes only.**

| Fig. | Kacmaz No. | Oem No | Oem Old No | Pcs. | Ürün Tanımı | Description |
|---|---|---|---|---|---|---|
| | K21.06520 | | | Kit | AĞIR SERİ.SENK.KİT | SYNCH.KIT PLANETARY |
| 1 | K21.03018 | 389 260 2036 | | 1 | TABLA SENKROMENÇ | FOLLOWER RING |
| 2 | K21.03017 | 389 262 0537 | (389 262 0037) | 2 | AĞIR SERİ FRENLEME (Mo) | SYNCHRONIZING CONE / Mo |
| 3 | K21.03028 | 945 262 6623 | (945 262 0823) | 1 | AĞIR SERİ HALKA 73 DİŞ | ENGAGING SLEEVE 73 T. |
| | | | (389 262 1623) | | | |
| | | | (389 262 3823) | | | |
| 4 | K21.03406 | 389 265 2449 | (389 265 1249) | 2 | A.SERİ HİLAL PABUCU | SLIDING PAD |
| 5 | K21.03187 | 389 262 9234 | (945 262 1234) | 1 | SERİ SENKROMENÇ | ENGAGING RING |

SYNCHRONIZER KIT PLANETARY
OLD MODEL

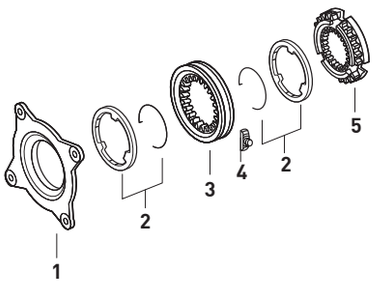


| Fig. | Kacmaz No. | Oem No | Oem Old No | Pcs. | Ürün Tanımı | Description |
|---|---|---|---|---|---|---|
| 1 | K21.03085 | 947 264 0005 | (389 269 0310) | 1 | YAĞ POMPA MİLİ | OIL PUMP SHAFT |
| 1 | K21.03670 | 947 264 0105 | | 1 | YAĞ POMPA MİLİ (RETARDER) | OIL PUMP SHAFT |
| 2 | K21.03511 | 029 997 5748 | | 1 | YAĞ POMPA KAPAK ORİNGİ | O-RING |
| 3 | K21.03558 | 947 264 0287 | | 1 | YAĞ POMPA KAPAĞI | OIL PUMP COVER |
| 4 | K21.03613 | 004 981 9225 | (004 981 8625) | 1 | PTO MİL BİLYASI | ROLLER BEARING |
| 5 | K21.06964 | 000471 045000 | (003 994 3741) | 1 | PTO MİL BİLYA SEKMANI | RETAINING RING |
| 6 | K21.06998 | 017 981 1705 | | 1 | PTO BORU DİŞLİ BİLYASI | ROLLER BEARING |
| 7 | | 947 260 4708 | | 1 | PTO BORU DİŞLİ | GEAR |
| 8 | | 017 981 1805 | | 2 | PTO BORU DİŞLİ BİLYASI | ROLLER BEARING |
| 9 | K21.04334 | 945 264 0006 | | 1 | PTO ARA ADAPTÖR MİLİ | INTERM.SHAFT |
| 10 | | 387 264 3652 | | 2 | BİLYA AYAR RAYNELİ | THRUST WASHER |
| 10 | | 387 264 3752 | | 2 | BİLYA AYAR RAYNELİ | THRUST WASHER |
| 10 | | 387 264 3852 | | 2 | BİLYA AYAR RAYNELİ | THRUST WASHER |
| 11 | | 000988 022010 | | 2 | BİLYA AYAR PULU | THRUST WASHER |
| 12 | K21.04333 | 385 993 5201 | | 1 | YAY | SPRING |
| 13 | | 912009 022100 | | 1 | BİLYA AYAR PUL SEKMANI | RETAINING RING |
| 14 | K21.04332 | 000625 000629 | | 1 | PTO MIL ŞAPKASI | PTO SHAFT CAP |
| 15 | | 016 981 6705 | | 1 | PTO BORU DİŞLİ BİLYASI | ROLLER BEARING |
| 16 | | 947 264 0621 | (947 264 0521) | 1 | PTO BORU DİŞLİ | GEAR |
| 17 | K21.04362 | | | kit | ARA ADAPTÖR MİLİ KOMPLE | INTERM.SHAFT COMP. |
| 18 | K21.06346 | 970 260 0457 | | kit | P.T.O VENTİLİ | VALVE |

P.T.O. (POWER TAKE OFF)

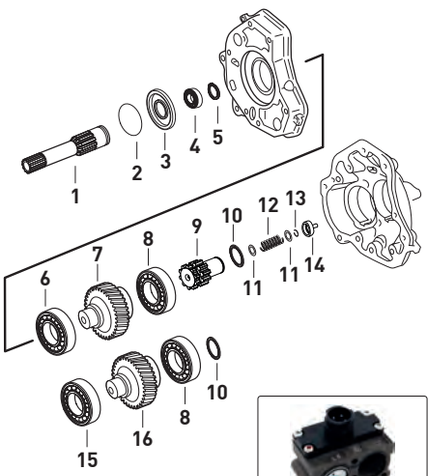


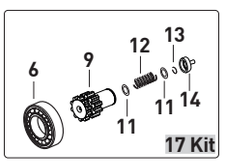


| Fig. | Kacmaz No. | Oem No | Oem Old No | Pcs. | Ürün Tanımı | Description |
|---|---|---|---|---|---|---|
| 1 | K21.06969 | 960 264 0105 | | 1 | PTO MİLİ | INTERM.SHAFT |
| 2 | K21.03558 | 947 264 0287 | | 1 | YAĞ POMPA KAPAĞI | OIL PUMP COVER |
| 3 | K21.03613 | 004 981 9225 | (004 981 8625) | 1 | PTO MİL BİLYASI | ROLLER BEARING |
| 4 | K21.06964 | 000471 045000 | (003 994 3741) | 1 | PTO MİL BİLYA SEKMANI | RETAINING RING |
| 5 | K21.06998 | 017 981 1705 | | 1 | PTO BORU DİŞLİ BİLYASI | ROLLER BEARING |
| 6 | | 947 260 4708 | | 1 | PTO BORU DİŞLİ | GEAR |
| 7 | | 017 981 1805 | | 2 | PTO BORU DİŞLİ BİLYASI | ROLLER BEARING |
| 8 | K21.04334 | 945 264 0006 | | 1 | PTO ARA ADAPTÖR MİLİ | INTERM.SHAFT |
| 9 | | 387 264 3652 | | 2 | BİLYA AYAR RAYNELİ | THRUST WASHER |
| 9 | | 387 264 3752 | | 2 | BİLYA AYAR RAYNELİ | THRUST WASHER |
| 9 | | 387 264 7152 | | 2 | BİLYA AYAR RAYNELİ | THRUST WASHER |
| 9 | | 387 264 4052 | | 2 | BİLYA AYAR RAYNELİ | THRUST WASHER |
| 10 | | 000988 022010 | | 2 | BİLYA AYAR PULU | THRUST WASHER |
| 11 | K21.04333 | 385 993 5201 | | 1 | YAY | SPRING |
| 12 | | 990 990 1700 | | 1 | BİLYA AYAR PUL SEKMANI | RETAINING RING |
| 13 | K21.04332 | 000625 000629 | | 1 | PTO MIL ŞAPKASI | PTO SHAFT CAP |
| 14 | | 990 981 0300 | | 1 | PTO BORU DİŞLİ BİLYASI | ROLLER BEARING |
| 15 | | 947 264 0921 | (947 264 0821) | 1 | PTO BORU DİŞLİ | GEAR |
| 16 | K21.04362 | | | kit | ARA ADAPTÖR MİLİ KOMPLE | INTERM.SHAFT COMP. |

P.T.O. (POWER TAKE OFF)

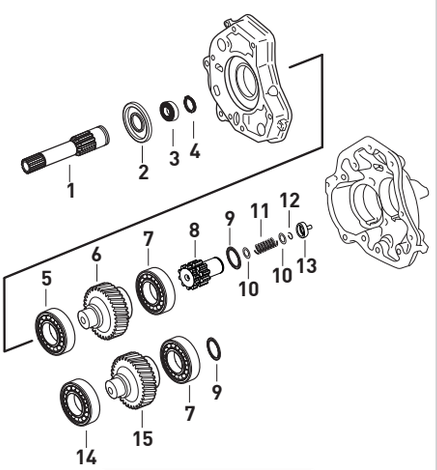




Original parts names, oem numbers, symbols and descriptions used in this catalogue are for reference purposes only.

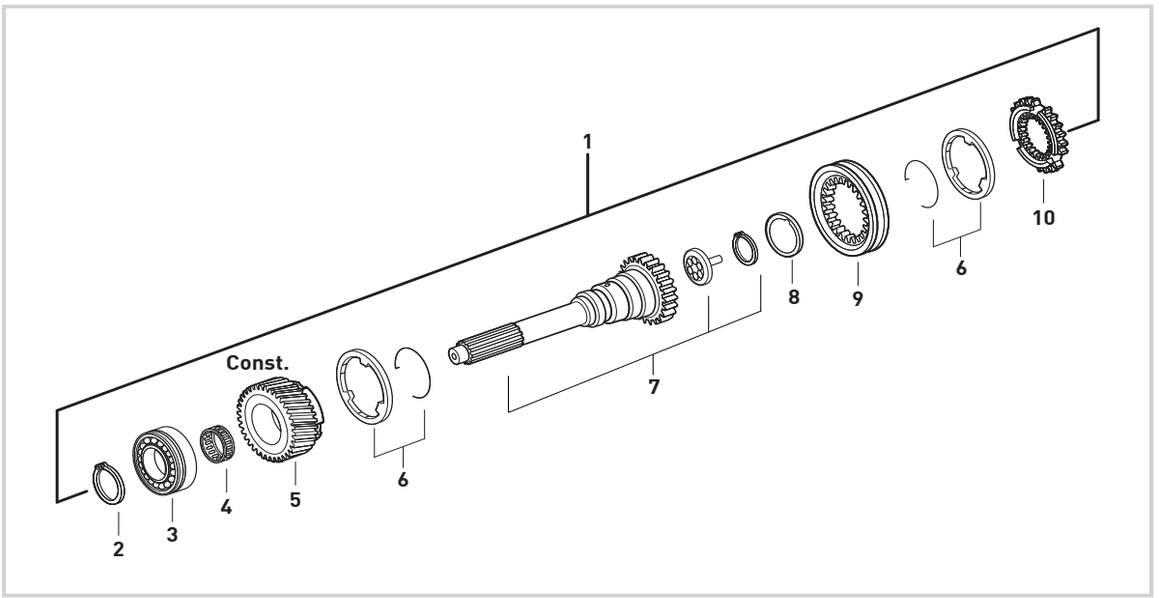


## NEW TYPE

| Fig. | Kacmaz No. | Oem No | Oem Old No | Pcs. | Ürün Tanımı | Description | Sizes |
|---|---|---|---|---|---|---|---|
| 1 | K21.03579 | | | Kit | PRİZDİREK KOMPLE | INPUT SHAFT COMPLETE | |
| 2 | K21.04346 | 387 262 8773 | | 1 | PRİZDİREK ÖN BİLYA SEKMANI | RETAINING RING | 3,20mm |
| 3 | K21.03618 | 011 981 1305 | (014 981 9005) | 1 | PRİZDİREK ÖN BİLYA | ROLLER BEARING | 75X140X34,25mm |
| 4 | K21.03815 | 016 981 0010 | (018 981 8710) | 1 | TAKVİYE DİŞLİ MASURA BİLYA | NEEDLE CAGE | 89X97X40mm |
| 5 | K21.03130 | 945 262 9817 | (945 262 5417) | 1 | TAKVİYE DİŞLİSİ 32 DİŞ | CONSTANT GEAR 32 T. | |
| | | | (945 262 7517) | | | | |
| 6 | K21.03136 | 945 260 2245 | (946 262 6337) | 2 | TAKVİYE FRENLEME (Mo) | SYNCHRONIZING CONE / Mo | |
| 7 | K21.03142 | 389 262 8201 | (945 262 0103) | 1 | PRİZDİREK 60 DİŞ | INPUT SHAFT 60 T. | |
| | | | (389 262 6201) | | | | |
| 8 | K21.03510 | 001 262 0362 | (000 262 8762) | 1 | PRİZDİREK ARKA KEÇE | OIL SEAL | 78,5X105X7mm |
| 9 | K21.03137 | 945 262 6823 | (945 262 6423) | 1 | TAKVİYE HALKA | ENGAGING SLEEVE | |
| 10 | K21.03147 | 945 262 7734 | (945 262 3634) | 1 | TAKVİYE SENKROMENÇ | ENGAGING RING | |

## OLD TYPE

| Fig. | Kacmaz No. | Oem No | Oem Old No | Pcs. | Ürün Tanımı | Description | Sizes |
|---|---|---|---|---|---|---|---|
| 1 | K21.03547 | 945 260 7792 | | Kit | PRİZDİREK KOMPLE | INPUT SHAFT COMPLETE | |
| 2 | K21.04346 | 387 262 8773 | | 1 | PRİZDİREK ÖN BİLYA SEKMANI | RETAINING RING | 3,20mm |
| 3 | K21.03618 | 011 981 1305 | (014 981 9005) | 1 | PRİZDİREK ÖN BİLYA | ROLLER BEARING | 75X140X34,25mm |
| 4 | K21.03815 | 016 981 0010 | (018 981 8710) | 1 | TAKVİYE DİŞLİ MASURA BİLYA | NEEDLE CAGE | 89X97X40mm |
| 5 | K21.03030 | 945 262 4110 | (945 262 1610) | 1 | TAKVİYE DİŞLİSİ 32 DİŞ | CONSTANT GEAR 32 T. | |
| | | | (945 262 0010) | | | | |
| 6 | K21.03015 | 389 262 0637 | (387 262 0837) | 2 | TAKVİYE FRENLEME (Mo) | SYNCHRONIZING CONE / Mo | |
| 7 | K21.03142 | 389 262 8201 | (945 262 0103) | 1 | PRİZDİREK 60 DİŞ | INPUT SHAFT 60 T. | |
| | | | (389 262 6201) | | | | |
| 8 | K21.03510 | 001 262 0362 | (000 262 8762) | 1 | PRİZDİREK ARKA KEÇE | OIL SEAL | 78,5X105X7mm |
| 9 | K21.03002 | 945 262 2823 | (945 262 0323) | 1 | TAKVİYE HALKA | ENGAGING SLEEVE | |
| 10 | K21.03024 | 389 262 5434 | (945 262 0334) | 1 | TAKVİYE SENKROMENÇ | ENGAGING RING | |



**Original parts names, oem numbers, symbols and descriptions used in this catalogue are for reference purposes only.**

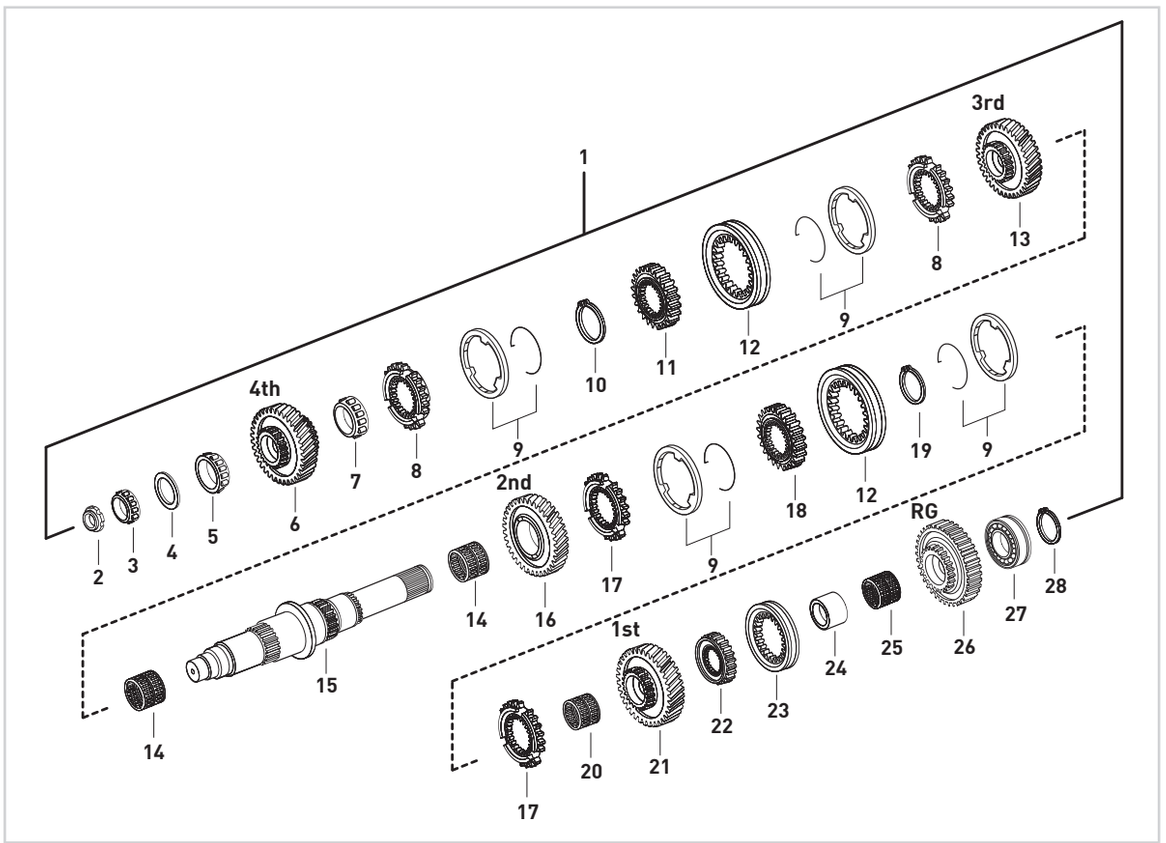


| Fig. | Kacmaz No. | Oem No | Oem Old No | Pcs. | Ürün Tanımı | Description | Sizes |
|---|---|---|---|---|---|---|---|
| 1 | K21.06667 | | | Kit | KAMALI MİL KOMPLE | MAIN SHAFT COMPLETE | |
| 2 | K21.03432 | 945 990 0250 | (945 990 0150) | 1 | KAMALI MİL SOMUNU | NUT | M30X1,5 |
| 3 | K21.03619 | 015 981 1605 | (013 981 1105) | 1 | KAMALI MİL UÇ BİLYA | ROLLER BEARING | 39,69X40,39mm |
| 4 | K21.94095 | | | 1 | 3.VİTES ÖN BİLYA AYAR PULU | THRUST WASHER | 1,70mm |
| 5 | K21.03629 | 015 981 7605 | (015 981 2005) | 1 | 4.VİTES DİŞLİSİ ÖN BİLYA | ROLLER BEARING | 50X41mm |
| 6 | K21.03026 | 945 262 8810 | (945 262 9310) | 1 | 4.VİTES DİŞLİSİ 29 DİŞ | GEAR 4th 29 T. | |
| 7 | K21.03631 | 015 981 7705 | (014 981 1605) | 1 | 4.VİTES DİŞLİSİ ARKA BİLYA | ROLLER BEARING | 55X23mm |
| 8 | K21.03146 | 945 262 8234 | (945 262 5434) | 2 | 3./4.VİTES SENKROMENÇ | ENGAGING RING | |
| 9 | K21.03148 | 947 260 1945 | (947 260 4645) | 4 | 1./2./3./4.VİTES FRENLEME (Mo) | SYNCHRONIZING CONE / Mo | |
| 10 | K21.06588 | 387 262 8173 | | 1 | 3./4.VİT.SENK.YIL.DİŞLİ EMN.SEK. | RETAINING RING | 2,80mm |
| 11 | K21.03149 | 389 262 4735 | (389 262 4635) | 1 | 3./4.VİTES YILDIZ DİŞLİ | SYNCHRONIZER HUB | |
| 12 | K21.03151 | 945 262 6523 | (930 262 0523) | 2 | 1./2./3./4.VİTES HALKA | ENGAGING SLEEVE | |
| 13 | K21.03152 | 945 262 3513 | (930 262 0713) | 1 | 3.VİTES DİŞLİSİ 34 DİŞ | GEAR 3rd 34 T. | |
| 14 | K21.03810 | 018 981 6610 | (010 981 5310) | 2 | 2./3.VİTES MASURA BİLYA | NEEDLE CAGE | 85X93X53mm |
| 15 | K21.06503 | 960 262 0205 | | 1 | KAMALI MİL | MAIN SHAFT | |
| 16 | K21.03158 | 389 262 2812 | (389 262 2512) | 1 | 2.VİTES DİŞLİSİ 39 DİŞ | GEAR 2nd 39 T. | |
| 17 | K21.03160 | 945 262 5534 | | 2 | 1./2.VİTES SENKROMENÇ | ENGAGING RING | |
| 18 | K21.03161 | 389 262 2535 | (945 262 0135) | 1 | 1./2.VİTES YILDIZ DİŞLİ | SYNCHRONIZER HUB | |
| 19 | K21.04343 | 387 262 2073 | | 1 | 1./2.VİT.SENK.YIL.DİŞLİ EMN.SEK. | RETAINING RING | 2,40mm |
| 20 | K21.03839 | 945 981 0010 | (018 981 8110) | 1 | 1.VİTES MASURA BİLYA | NEEDLE CAGE | 75X83X48mm |
| 21 | K21.03162 | 946 262 0811 | (389 262 2711) | 1 | 1.VİTES DİŞLİSİ 44 DİŞ | GEAR 1st 44 T. | |
| 22 | K21.03059 | 389 262 0135 | | 1 | GERİ VİTES YILDIZ DİŞLİ | SYNCHRONIZER HUB | |
| 23 | K21.03060 | 389 262 1723 | (389 262 0023) | 1 | GERİ VİTES HALKASI | ENGAGING SLEEVE | |
| 24 | K21.03065 | 389 262 0150 | | 1 | GERİ VİTES MASURA BİLYA ÇANAĞI | BEARING RACE | |
| 25 | K21.03813 | 013 981 1810 | (013 981 2610) | 1 | GERİ VİTES MASURA BİLYA | NEEDLE CAGE | 78x86x33mm |
| 26 | K21.06045 | 930 262 0233 | | 1 | GERİ VİTES DİŞLİSİ 40 DİŞ | REVERSE GEAR 40 T | |
| 27 | K21.03661 | 002 981 8181 | | 1 | KAMALI MİL ARKA BİLYA | ROLLER BEARING | 60x130x35,2mm |
| 28 | K21.04331 | 007 994 1841 | (006 994 9941) | 1 | KAMALI MİL ARKA BİLYA SEKMANI | RETAINING RING | 2,50mm |



Original parts names, oem numbers, symbols and descriptions used in this catalogue are for reference purposes only.

# GEARBOX G 230 -16 / 14,02 - 0,83 MAIN SHAFT COMPLETE

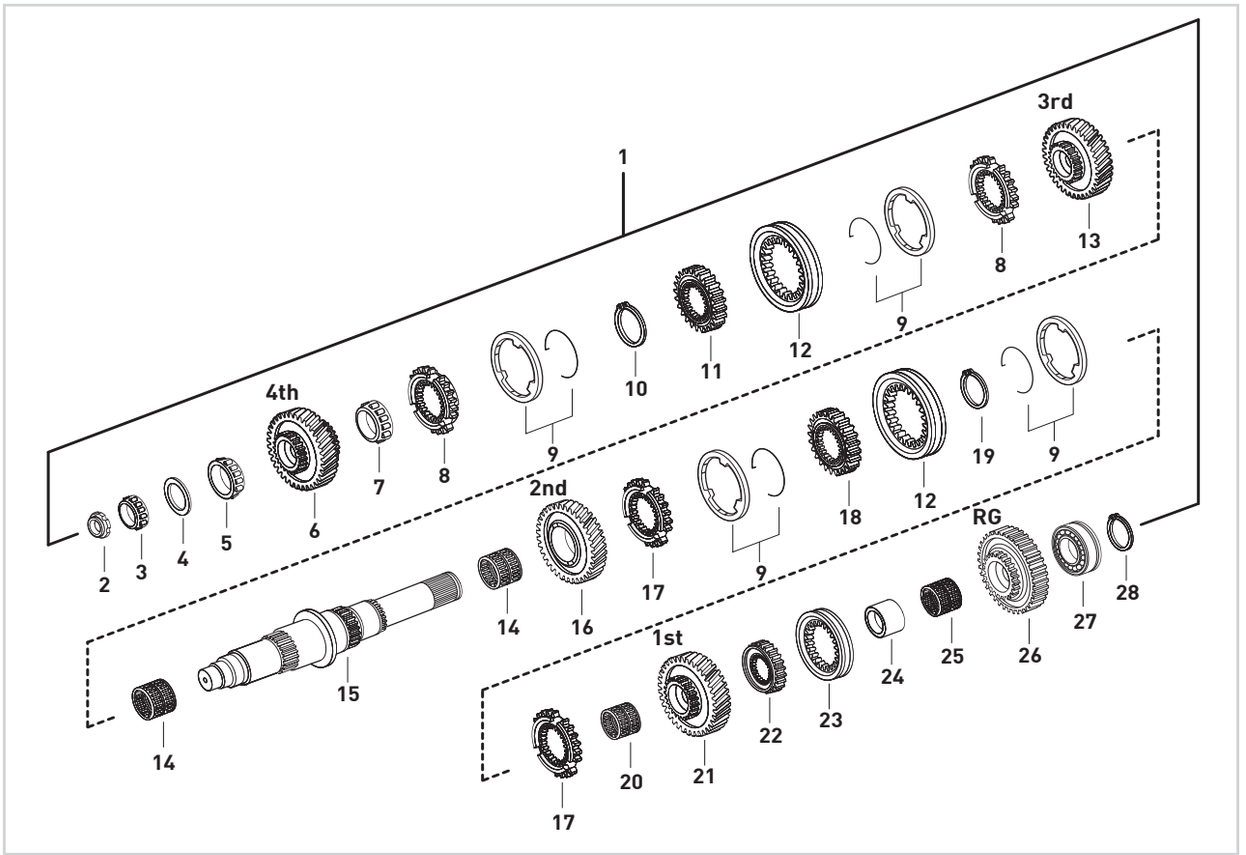


| Fig. | Kacmaz No. | Oem No | Oem Old No | Pcs. | Ürün Tanımı | Description | Sizes |
|---|---|---|---|---|---|---|---|
| 1 | K21.03561 | | | Kit | KAMALI MİL KOMPLE | MAIN SHAFT COMPLETE | |
| 2 | K21.03432 | 945 990 0250 | (945 990 0150) | 1 | KAMALI MİL SOMUNU | NUT | M30X1,5 |
| 3 | K21.03619 | 015 981 1605 | (013 981 1105) | 1 | KAMALI MİL UÇ BİLYA | ROLLER BEARING | 39,69X40,39mm |
| 4 | K21.94095 | | | 1 | 3.VİTES ÖN BİLYA AYAR PULU | THRUST WASHER | 1,70mm |
| 5 | K21.03629 | 015 981 7605 | (015 981 2005) | 1 | 4.VİTES DİŞLİSİ ÖN BİLYA | ROLLER BEARING | 50X41mm |
| 6 | K21.03026 | 945 262 8810 | (945 262 9310) | 1 | 4.VİTES DİŞLİSİ 29 DİŞ | GEAR 4th 29 T. | |
| 7 | K21.03631 | 015 981 7705 | (014 981 1605) | 1 | 4.VİTES DİŞLİSİ ARKA BİLYA | ROLLER BEARING | 55X23mm |
| 8 | K21.03146 | 945 262 8234 | (945 262 5434) | 2 | 3./4.VİTES SENKROMENÇ | ENGAGING RING | |
| 9 | K21.03148 | 947 260 1945 | (947 260 4645) | 4 | 1./2./3./4.VİTES FRENLEME (Mo) | SYNCHRONIZING CONE / Mo | |
| 10 | K21.06588 | 387 262 8173 | | 1 | 3./4.VİT.SENK.YIL.DİŞLİ EMN.SEK. | RETAINING RING | 2,80mm |
| 11 | K21.03149 | 389 262 4735 | (389 262 4635) | 1 | 3./4.VİTES YILDIZ DİŞLİ | SYNCHRONIZER HUB | |
| 12 | K21.03151 | 945 262 6523 | (930 262 0523) | 2 | 1./2./3./4.VİTES HALKA | ENGAGING SLEEVE | |
| 13 | K21.03152 | 945 262 3513 | (930 262 0713) | 1 | 3.VİTES DİŞLİSİ 34 DİŞ | GEAR 3rd 34 T. | |
| 14 | K21.03810 | 018 981 6610 | (010 981 5310) | 2 | 2./3.VİTES MASURA BİLYA | NEEDLE CAGE | 85X93X53mm |
| 15 | K21.03156 | 945 262 4505 | | 1 | KAMALI MİL | MAIN SHAFT | |
| 16 | K21.03158 | 389 262 2812 | (389 262 2512) | 1 | 2.VİTES DİŞLİSİ 39 DİŞ | GEAR 2nd 39 T. | |
| 17 | K21.03160 | 945 262 5534 | | 2 | 1./2.VİTES SENKROMENÇ | ENGAGING RING | |
| 18 | K21.03161 | 389 262 2535 | (945 262 0135) | 1 | 1./2.VİTES YILDIZ DİŞLİ | SYNCHRONIZER HUB | |
| 19 | K21.04343 | 387 262 2073 | | 1 | 1./2.VİT.SENK.YIL.DİŞLİ EMN.SEK. | RETAINING RING | 2,40mm |
| 20 | K21.03839 | 945 981 0010 | (018 981 8110) | 1 | 1.VİTES MASURA BİLYA | NEEDLE CAGE | 75X83X48mm |
| 21 | K21.03162 | 946 262 0811 | (389 262 2711) | 1 | 1.VİTES DİŞLİSİ 44 DİŞ | GEAR 1st 44 T. | |
| 22 | K21.03059 | 389 262 0135 | | 1 | GERİ VİTES YILDIZ DİŞLİ | SYNCHRONIZER HUB | |
| 23 | K21.03060 | 389 262 1723 | (389 262 0023) | 1 | GERİ VİTES HALKASI | ENGAGING SLEEVE | |
| 24 | K21.03112 | 389 262 2550 | (389 262 1650) | 1 | GERİ VİTES MASURA BİLYA ÇANAĞI | BEARING RACE | |
| 25 | K21.03803 | 009 981 1510 | (017 981 7810) | 1 | GERİ VİTES MASURA BİLYA | NEEDLE CAGE | 78X86X35mm |
| 26 | K21.03165 | 945 262 3233 | (389 262 2033) | 1 | GERİ VİTES DİŞLİSİ 40 DİŞ | REVERSE GEAR 40 T. | |
| 27 | K21.03623 | 014 981 6105 | (016 981 1305) | 1 | KAMALI MİL ARKA BİLYA | ROLLER BEARING | 60X130X33,2mm |
| 28 | K21.04331 | 007 994 1841 | (006 994 9941) | 1 | KAMALI MİL ARKA BİLYA SEKMANI | RETAINING RING | 2,50mm |

**Original parts names, oem numbers, symbols and descriptions used in this catalogue are for reference purposes only.**

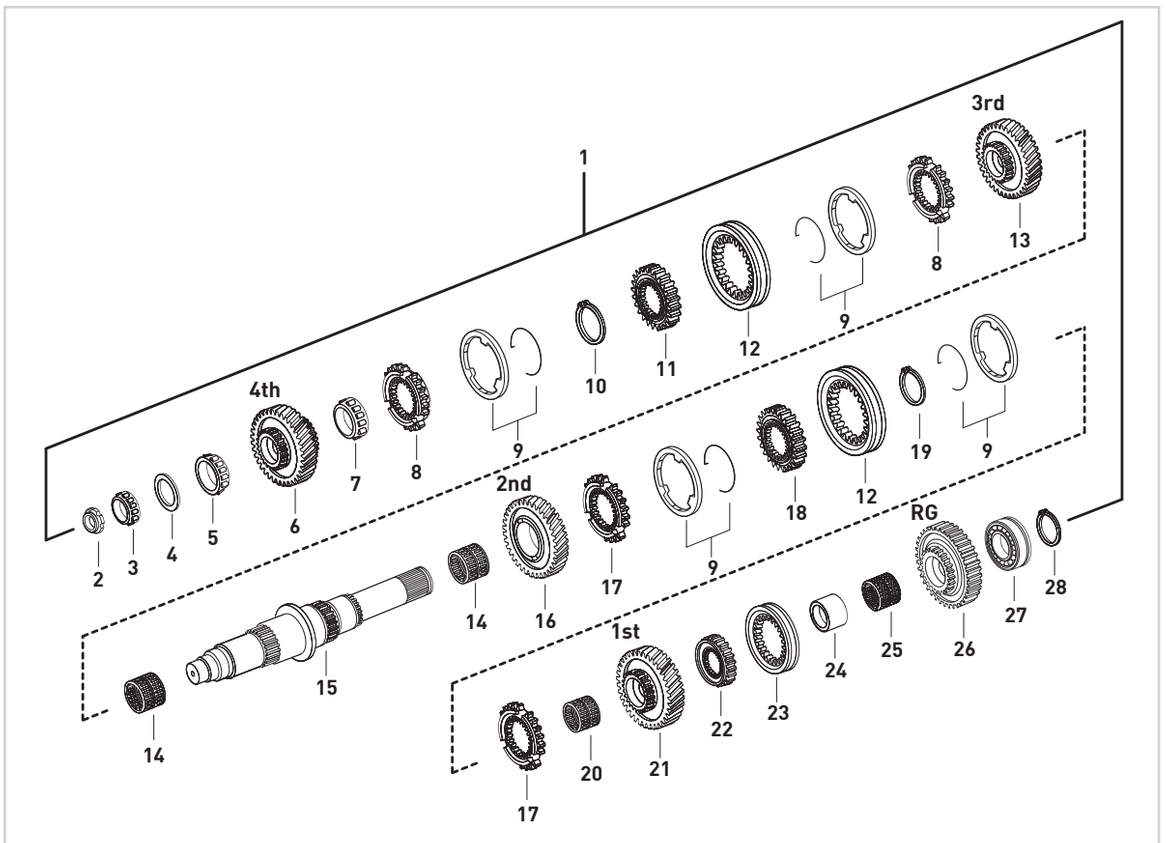


| Fig. | Kacmaz No. | Oem No | Oem Old No | Pcs. | Ürün Tanımı | Description | Sizes |
|---|---|---|---|---|---|---|---|
| 1 | K21.06379 | | | kit | KAMALI MİL KOMPLE | MAIN SHAFT COMPLETE | |
| 2 | K21.03432 | 945 990 0250 | (945 990 0150) | 1 | KAMALI MİL SOMUNU | NUT | M30X1,5 |
| 3 | K21.03619 | 015 981 1605 | (013 981 1105) | 1 | KAMALI MİL UÇ BİLYA | ROLLER BEARING | 39,69X40,39mm |
| 4 | K21.94095 | | | 1 | 3.VİTES ÖN BİLYA AYAR PULU | THRUST WASHER | 1,70mm |
| 5 | K21.03629 | 015 981 7605 | (015 981 2005) | 1 | 4.VİTES DİŞLİSİ ÖN BİLYA | ROLLER BEARING | 50X41mm |
| 6 | K21.03026 | 945 262 8810 | (945 262 9310) | 1 | 4.VİTES DİŞLİSİ 29 DİŞ | GEAR 4th 29 T. | |
| 7 | K21.03631 | 015 981 7705 | (014 981 1605) | 1 | 4.VİTES DİŞLİSİ ARKA BİLYA | ROLLER BEARING | 55X23mm |
| 8 | K21.03146 | 945 262 8234 | (945 262 5434) | 2 | 3./4.VİTES SENKROMENÇ | ENGAGING RING | |
| 9 | K21.03148 | 947 260 1945 | (947 260 4645) | 4 | 1./2./3./4.VİTES FRENLEME (Mo) | SYNCHRONIZING CONE / Mo | |
| 10 | K21.06588 | 387 262 8173 | | 1 | 3./4.VİT.SENK.YIL.DİŞLİ EMN.SEK. | RETAINING RING | 2,80mm |
| 11 | K21.03149 | 389 262 4735 | (389 262 4635) | 1 | 3./4.VİTES YILDIZ DİŞLİ | SYNCHRONIZER HUB | |
| 12 | K21.03151 | 945 262 6523 | (930 262 0523) | 2 | 1./2./3./4.VİTES HALKA | ENGAGING SLEEVE | |
| 13 | K21.03152 | 945 262 3513 | (930 262 0713) | 1 | 3.VİTES DİŞLİSİ 34 DİŞ | GEAR 3rd 34 T. | |
| 14 | K21.03810 | 018 981 6610 | (010 981 5310) | 2 | 2./3.VİTES MASURA BİLYA | NEEDLE CAGE | 85X93X53mm |
| 15 | K21.06042 | 930 262 1205 | (930 262 2405) | 1 | KAMALI MİL | MAIN SHAFT | |
| 16 | K21.03158 | 389 262 2812 | (389 262 2512) | 1 | 2.VİTES DİŞLİSİ 39 DİŞ | GEAR 2nd 39 T. | |
| 17 | K21.03160 | 945 262 5534 | | 2 | 1./2.VİTES SENKROMENÇ | ENGAGING RING | |
| 18 | K21.03161 | 389 262 2535 | (945 262 0135) | 1 | 1./2.VİTES YILDIZ DİŞLİ | SYNCHRONIZER HUB | |
| 19 | K21.04343 | 387 262 2073 | | 1 | 1./2.VİT.SENK.YIL.DİŞLİ EMN.SEK. | RETAINING RING | 2,40mm |
| 20 | K21.03839 | 945 981 0010 | (018 981 8110) | 1 | 1.VİTES MASURA BİLYA | NEEDLE CAGE | 75X83X48mm |
| 21 | K21.03162 | 946 262 0811 | (389 262 2711) | 1 | 1.VİTES DİŞLİSİ 44 DİŞ | GEAR 1st 44 T. | |
| 22 | K21.03059 | 389 262 0135 | | 1 | GERİ VİTES YILDIZ DİŞLİ | SYNCHRONIZER HUB | |
| 23 | K21.03060 | 389 262 1723 | (389 262 0023) | 1 | GERİ VİTES HALKASI | ENGAGING SLEEVE | |
| 24 | K21.03065 | 389 262 0150 | | 1 | GERİ VİTES MASURA BİLYA ÇANAĞI | BEARING RACE | |
| 25 | K21.03813 | 013 981 1810 | (013 981 2610) | 1 | GERİ VİTES MASURA BİLYA | NEEDLE CAGE | 78X86X33mm |
| 26 | K21.06045 | 930 262 0233 | | 1 | GERİ VİTES DİŞLİSİ 40 DİŞ | REVERSE GEAR 40 T | |
| 27 | K21.03661 | 002 981 8181 | | 1 | KAMALI MİL ARKA BİLYA | ROLLER BEARING | 60X130X35,2mm |
| 28 | K21.04331 | 007 994 1841 | (006 994 9941) | 1 | KAMALI MİL ARKA BİLYA SEKMANI | RETAINING RING | 2,50mm |



Original parts names, oem numbers, symbols and descriptions used in this catalogue are for reference purposes only.

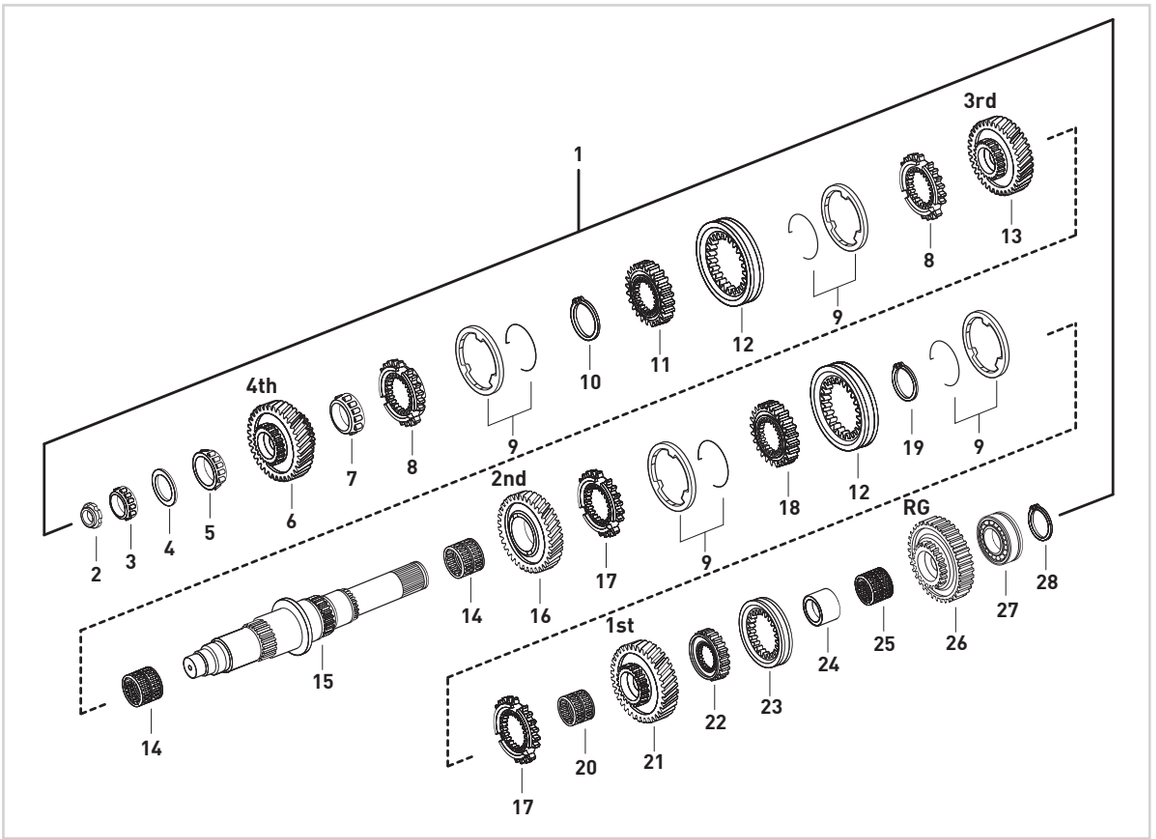


| Fig. | Kacmaz No. | Oem No | Oem Old No | Pcs. | Ürün Tanımı | Description | Sizes |
|---|---|---|---|---|---|---|---|
| 1 | K21.04341 | | | Kit | KAMALI MİL KOMPLE | MAIN SHAFT COMPLETE | |
| 2 | K21.03432 | 945 990 0250 | (945 990 0150) | 1 | KAMALI MİL SOMUNU | NUT | M30X1,5 |
| 3 | K21.03619 | 015 981 1605 | (013 981 1105) | 1 | KAMALI MİL UÇ BİLYA | ROLLER BEARING | 39,69X40,39mm |
| 4 | K21.94095 | | | 1 | 3.VİTES ÖN BİLYA AYAR PULU | THRUST WASHER | 1,70mm |
| 5 | K21.03629 | 015 981 7605 | (015 981 2005) | 1 | 4.VİTES DİŞLİSİ ÖN BİLYA | ROLLER BEARING | 50X41mm |
| 6 | K21.03026 | 945 262 8810 | (945 262 9310) | 1 | 4.VİTES DİŞLİSİ 29 DİŞ | GEAR 4th 29 T. | |
| 7 | K21.03631 | 015 981 7705 | (014 981 1605) | 1 | 4.VİTES DİŞLİSİ ARKA BİLYA | ROLLER BEARING | 55X23mm |
| 8 | K21.03146 | 945 262 8234 | (945 262 5434) | 2 | 3./4.VİTES SENKROMENÇ | ENGAGING RING | |
| 9 | K21.03148 | 947 260 1945 | (947 260 4645) | 4 | 1./2./3./4.VİTES FRENLEME (Mo) | SYNCHRONIZING CONE | |
| 10 | K21.06588 | 387 262 8173 | | 1 | 3./4.VİT.SENK.YIL.DİŞLİ EMN.SEK. | RETAINING RING | 2,80mm |
| 11 | K21.03149 | 389 262 4735 | (389 262 4635) | 1 | 3./4.VİTES YILDIZ DİŞLİ | SYNCHRONIZER HUB | |
| 12 | K21.03151 | 945 262 6523 | (930 262 0523) | 2 | 1./2./3./4.VİTES HALKA | ENGAGING SLEEVE | |
| 13 | K21.03152 | 945 262 3513 | (930 262 0713) | 1 | 3.VİTES DİŞLİSİ 34 DİŞ | GEAR 3rd 34 T. | |
| 14 | K21.03810 | 018 981 6610 | (010 981 5310) | 2 | 2./3.VİTES MASURA BİLYA | NEEDLE CAGE | 85X93X53mm |
| 15 | K21.06042 | 930 262 1205 | (930 262 2405) | 1 | KAMALI MİL | MAIN SHAFT | |
| 16 | K21.03158 | 389 262 2812 | (389 262 2512) | 1 | 2.VİTES DİŞLİSİ 39 DİŞ | GEAR 2nd 39 T. | |
| 17 | K21.03160 | 945 262 5534 | | 2 | 1./2.VİTES SENKROMENÇ | ENGAGING RING | |
| 18 | K21.03161 | 389 262 2535 | (945 262 0135) | 1 | 1./2.VİTES YILDIZ DİŞLİ | SYNCHRONIZER HUB | |
| 19 | K21.04343 | 387 262 2073 | | 1 | 1./2.VİT.SENK.YIL.DİŞLİ EMN.SEK. | RETAINING RING | 2,40mm |
| 20 | K21.03839 | 945 981 0010 | (018 981 8110) | 1 | 1.VİTES MASURA BİLYA | NEEDLE CAGE | 75X83X48mm |
| 21 | K21.03162 | 946 262 0811 | (389 262 2711) | 1 | 1.VİTES DİŞLİSİ 44 DİŞ | GEAR 1st 44 T. | |
| 22 | K21.03163 | 945 262 3835 | | 1 | GERİ VİTES YILDIZ DİŞLİ | SYNCHRONIZER HUB | |
| 23 | K21.03061 | 389 262 1823 | (389 262 0923) | 1 | GERİ VİTES HALKASI | ENGAGING SLEEVE | |
| 24 | K21.03065 | 389 262 0150 | | 1 | GERİ VİTES MASURA BİLYA ÇANAĞI | BEARING RACE | |
| 25 | K21.03813 | 013 981 1810 | (013 981 2610) | 1 | GERİ VİTES MASURA BİLYA | NEEDLE CAGE | 78X86X33mm |
| 26 | K21.06044 | 960 262 0033 | | 1 | GERİ VİTES DİŞLİSİ 40 DİŞ | REVERSE GEAR 40 T. | |
| 27 | K21.03661 | 002 981 8181 | | 1 | KAMALI MİL ARKA BİLYA | ROLLER BEARING | 60X130X35,2mm |
| 28 | K21.04331 | 007 994 1841 | (006 994 9941) | 1 | KAMALI MİL ARKA BİLYA SEKMANI | RETAINING RING | 2,50mm |



**Original parts names, oem numbers, symbols and descriptions used in this catalogue are for reference purposes only.**

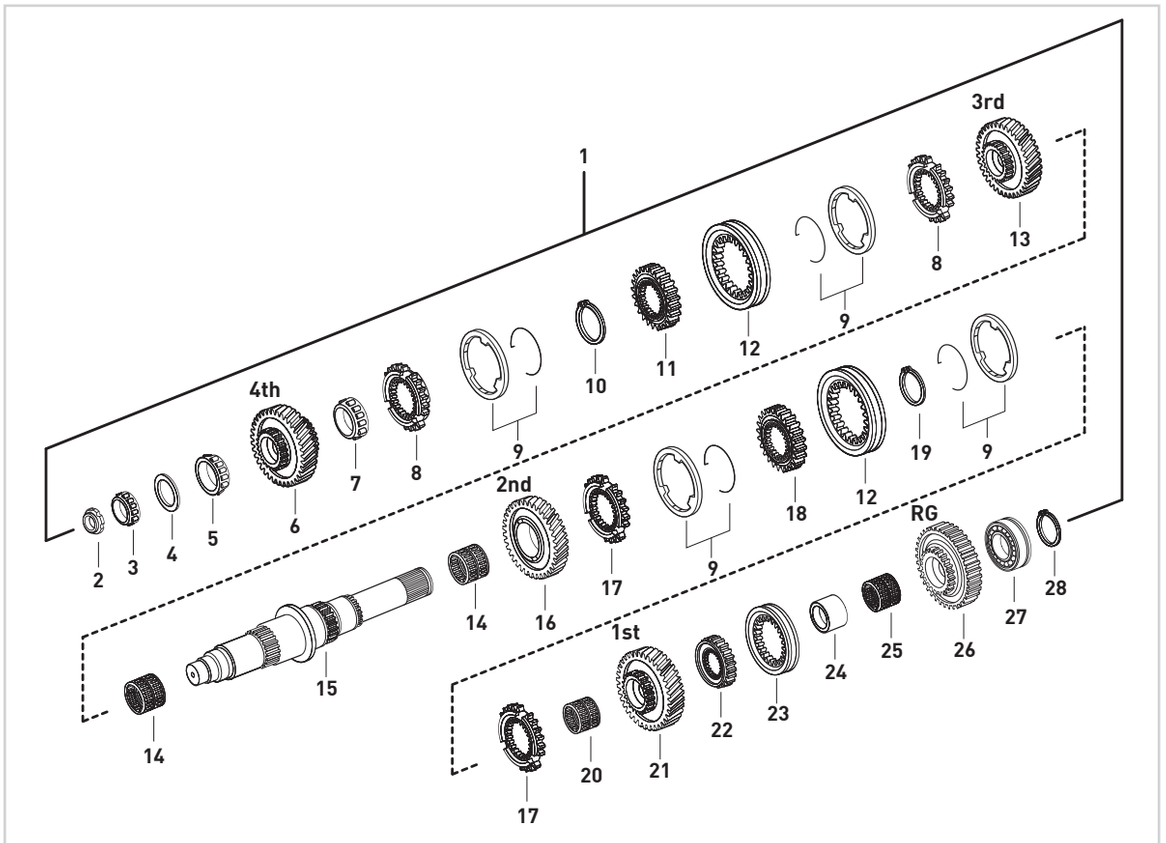


| Fig. | Kacmaz No. | Oem No | Oem Old No | Pcs. | Ürün Tanımı | Description | Sizes |
|---|---|---|---|---|---|---|---|
| 1 | K21.03560 | 947 260 6622 | | Kit | KAMALI MİL KOMPLE | MAIN SHAFT COMPLETE | |
| 2 | K21.03432 | 945 990 0250 | (945 990 0150) | 1 | KAMALI MİL SOMUNU | NUT | M30X1,5 |
| 3 | K21.03619 | 015 981 1605 | (013 981 1105) | 1 | KAMALI MİL UÇ BİLYA | ROLLER BEARING | 39,69X40,39mm |
| 4 | K21.94095 | | | 1 | 3.VİTES ÖN BİLYA AYAR PULU | THRUST WASHER | 1,70mm |
| 5 | K21.03629 | 015 981 7605 | (015 981 2005) | 1 | 4.VİTES DİŞLİSİ ÖN BİLYA | ROLLER BEARING | 50X41mm |
| 6 | K21.03026 | 945 262 8810 | (945 262 9310) | 1 | 4.VİTES DİŞLİSİ 29 DİŞ | GEAR 4th 29 T. | |
| 7 | K21.03631 | 015 981 7705 | (014 981 1605) | 1 | 4.VİTES DİŞLİSİ ARKA BİLYA | ROLLER BEARING | 55X23mm |
| 8 | K21.03027 | 945 262 0534 | (389 262 5034) | 2 | 3./4.VİTES SENKROMENÇ | ENGAGING RING | |
| 9 | K21.03016 | 389 262 0737 | (387 262 0937) | 4 | 1./2./3./4.VİTES FRENLEME (Mo) | SYNCHRONIZING CONE / Mo | |
| 10 | K21.06588 | 387 262 8173 | | 1 | 3./4.VİT.SENK.YIL.DİŞLİ EMN.SEK. | RETAINING RING | 2,80mm |
| 11 | K21.03149 | 389 262 4735 | (389 262 4635) | 1 | 3./4.VİTES YILDIZ DİŞLİ | SYNCHRONIZER HUB | |
| 12 | K21.03009 | 945 262 2723 | (945 262 0423) | 2 | 1./2./3./4.VİTES HALKA | ENGAGING SLEEVE | |
| 13 | K21.03152 | 945 262 3513 | (930 262 0713) | 1 | 3.VİTES DİŞLİSİ 34 DİŞ | GEAR 3rd 34 T. | |
| 14 | K21.03810 | 018 981 6610 | (010 981 5310) | 2 | 2./3.VİTES MASURA BİLYA | NEEDLE CAGE | 85X93X53mm |
| 15 | K21.03156 | 945 262 4505 | | 1 | KAMALI MİL | MAIN SHAFT | |
| 16 | K21.03158 | 389 262 2812 | (389 262 2512) | 1 | 2.VİTES DİŞLİSİ 39 DİŞ | GEAR 2nd 39 T. | |
| 17 | K21.03025 | 945 262 0434 | (389 262 0034) | 2 | 1./2.VİTES SENKROMENÇ | ENGAGING RING | |
| 18 | K21.03161 | 389 262 2535 | (945 262 0135) | 1 | 1./2.VİTES YILDIZ DİŞLİ | SYNCHRONIZER HUB | |
| 19 | K21.04343 | 387 262 2073 | | 1 | 1./2.VİT.SENK.YIL.DİŞLİ EMN.SEK. | RETAINING RING | 2,40mm |
| 20 | K21.03839 | 945 981 0010 | (018 981 8110) | 1 | 1.VİTES MASURA BİLYA | NEEDLE CAGE | 75X83X48mm |
| 21 | K21.03162 | 946 262 0811 | (389 262 2711) | 1 | 1.VİTES DİŞLİSİ 44 DİŞ | GEAR 1st 44 T. | |
| 22 | K21.03059 | 389 262 0135 | | 1 | GERİ VİTES YILDIZ DİŞLİ | SYNCHRONIZER HUB | |
| 23 | K21.03060 | 389 262 1723 | (389 262 0023) | 1 | GERİ VİTES HALKASI | ENGAGING SLEEVE | |
| 24 | K21.03112 | 389 262 2550 | (389 262 1650) | 1 | GERİ VİTES MASURA BİLYA ÇANAĞI | BEARING RACE | |
| 25 | K21.03803 | 009 981 1510 | (017 981 7810) | 1 | GERİ VİTES MASURA BİLYA | NEEDLE CAGE | 78X86X35mm |
| 26 | K21.03165 | 945 262 3233 | (389 262 2033) | 1 | GERİ VİTES DİŞLİSİ 40 DİŞ | REVERSE GEAR 40 T. | |
| 27 | K21.03623 | 014 981 6105 | (016 981 1305) | 1 | KAMALI MİL ARKA BİLYA | ROLLER BEARING | 60X130X33,2mm |
| 28 | K21.04331 | 007 994 1841 | (006 994 9941) | 1 | KAMALI MİL ARKA BİLYA SEKMANI | RETAINING RING | 2,50mm |



Original parts names, oem numbers, symbols and descriptions used in this catalogue are for reference purposes only.

# GEARBOX MAIN SHAFT COMPLETE G 230 - 16 / 14,2 - 0,83

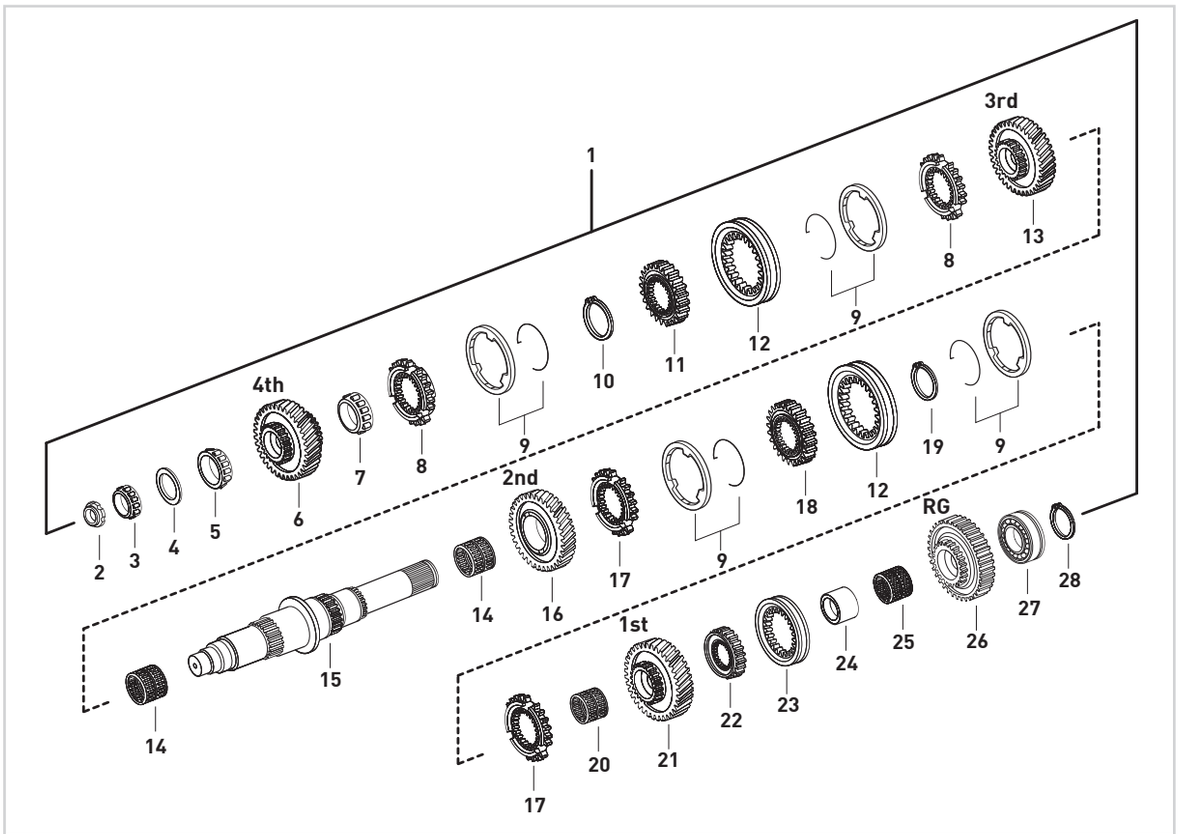


| Fig. | Kacmaz No. | Oem No | Oem Old No | Pcs. | Ürün Tanımı | Description | Sizes |
|---|---|---|---|---|---|---|---|
| 1 | K21.03552 | | | Kit | KAMALI MİL KOMPLE | MAIN SHAFT COMPLETE | |
| 2 | K21.03432 | 945 990 0250 | (945 990 0150) | 1 | KAMALI MİL SOMUNU | NUT | M30X1,5 |
| 3 | K21.03619 | 015 981 1605 | (013 981 1105) | 1 | KAMALI MİL UÇ BİLYA | ROLLER BEARING | 39,69X40,39mm |
| 4 | K21.94095 | | | 1 | 3.VİTES ÖN BİLYA AYAR PULU | THRUST WASHER | 1,70mm |
| 5 | K21.03629 | 015 981 7605 | (015 981 2005) | 1 | 4.VİTES DİŞLİSİ ÖN BİLYA | ROLLER BEARING | 50X41mm |
| 6 | K21.03026 | 945 262 8810 | (945 262 9310) | 1 | 4.VİTES DİŞLİSİ 29 DİŞ | GEAR 4th 29 T. | |
| 7 | K21.03631 | 015 981 7705 | (014 981 1605) | 1 | 4.VİTES DİŞLİSİ ARKA BİLYA | ROLLER BEARING | 55X23mm |
| 8 | K21.03146 | 945 262 8234 | (945 262 5434) | 2 | 3./4.VİTES SENKROMENÇ | ENGAGING RING | |
| 9 | K21.03148 | 947 260 1945 | (947 260 4645) | 4 | 1./2./3./4.VİTES FRENLEME (Mo) | SYNCHRONIZING CONE / Mo | |
| 10 | K21.06588 | 387 262 8173 | | 1 | 3./4.VİT.SENK.YIL.DİŞLİ EMN.SEK. | RETAINING RING | 2,80mm |
| 11 | K21.03149 | 389 262 4735 | (389 262 4635) | 1 | 3./4.VİTES YILDIZ DİŞLİ | SYNCHRONIZER HUB | |
| 12 | K21.03151 | 945 262 6523 | (930 262 0523) | 2 | 1./2./3./4.VİTES HALKA | ENGAGING SLEEVE | |
| 13 | K21.03152 | 945 262 3513 | (930 262 0713) | 1 | 3.VİTES DİŞLİSİ 34 DİŞ | GEAR 3rd 34 T. | |
| 14 | K21.03810 | 018 981 6610 | (010 981 5310) | 2 | 2./3.VİTES MASURA BİLYA | NEEDLE CAGE | 85X93X53mm |
| 15 | K21.03156 | 945 262 4505 | | 1 | KAMALI MİL | MAIN SHAFT | |
| 16 | K21.03158 | 389 262 2812 | (389 262 2512) | 1 | 2.VİTES DİŞLİSİ 39 DİŞ | GEAR 2nd 39 T. | |
| 17 | K21.03160 | 945 262 5534 | | 2 | 1./2.VİTES SENKROMENÇ | ENGAGING RING | |
| 18 | K21.03161 | 389 262 2535 | (945 262 0135) | 1 | 1./2.VİTES YILDIZ DİŞLİ | SYNCHRONIZER HUB | |
| 19 | K21.04343 | 387 262 2073 | | 1 | 1./2.VİT.SENK.YIL.DİŞLİ EMN.SEK. | RETAINING RING | 2,40mm |
| 20 | K21.03839 | 945 981 0010 | (018 981 8110) | 1 | 1.VİTES MASURA BİLYA | NEEDLE CAGE | 75X83X48mm |
| 21 | K21.03162 | 946 262 0811 | (389 262 2711) | 1 | 1.VİTES DİŞLİSİ 44 DİŞ | GEAR 1st 44 T. | |
| 22 | K21.03164 | 389 262 3935 | | 1 | GERİ VİTES YILDIZ DİŞLİ | SYNCHRONIZER HUB | |
| 23 | K21.03061 | 389 262 1823 | (389 262 0923) | 1 | GERİ VİTES HALKASI | ENGAGING SLEEVE | |
| 24 | K21.03112 | 389 262 2550 | (389 262 1650) | 1 | GERİ VİTES MASURA BİLYA ÇANAĞI | BEARING RACE | |
| 25 | K21.03803 | 009 981 1510 | (017 981 7810) | 1 | GERİ VİTES MASURA BİLYA | NEEDLE CAGE | 78X86X35mm |
| 26 | K21.03168 | 945 262 3333 | (389 262 2133) | 1 | GERİ VİTES DİŞLİSİ 40 DİŞ | REVERSE GEAR 40 T. | |
| 27 | K21.03623 | 014 981 6105 | (016 981 1305) | 1 | KAMALI MİL ARKA BİLYA | ROLLER BEARING | 60X130X33,2mm |
| 28 | K21.04331 | 007 994 1841 | (006 994 9941) | 1 | KAMALI MİL ARKA BİLYA SEKMANI | RETAINING RING | 2,50mm |



**Original parts names, oem numbers, symbols and descriptions used in this catalogue are for reference purposes only.**

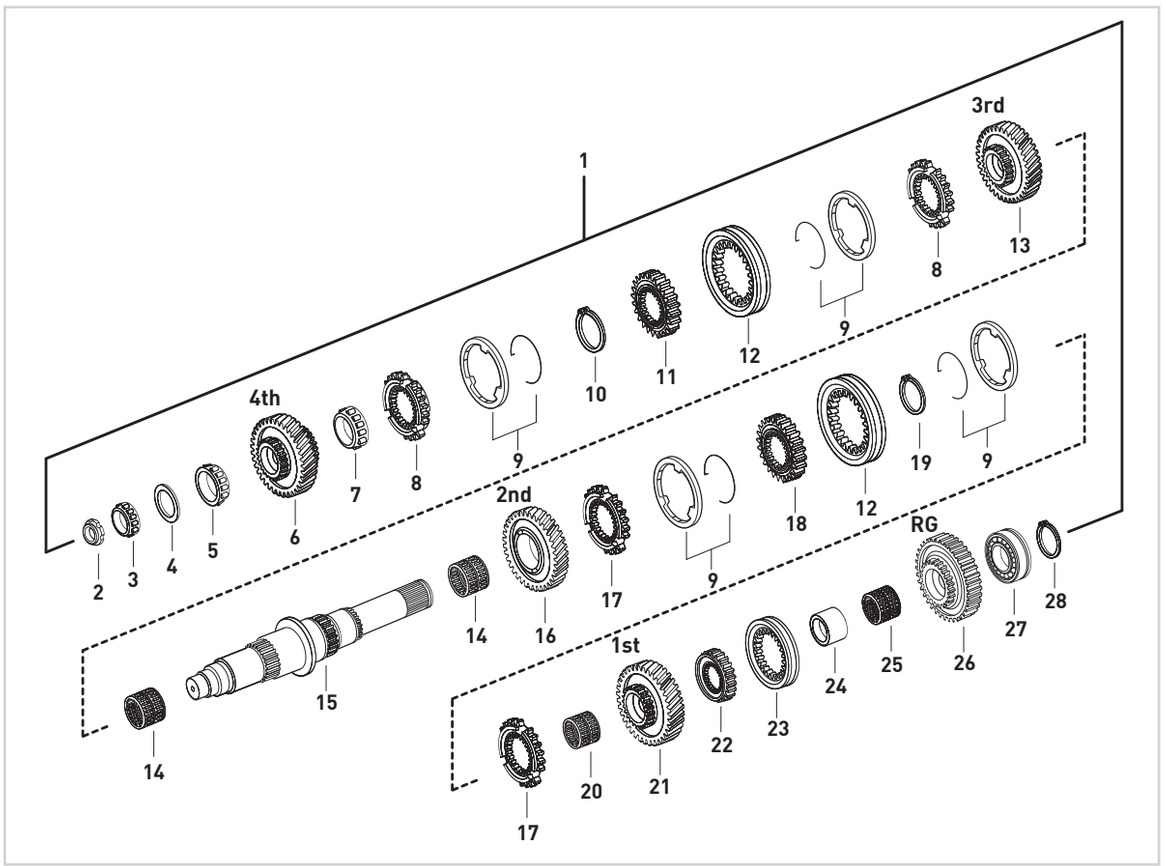


| Fig. | Kacmaz No. | Oem No | Oem Old No | Pcs. | Ürün Tanımı | Description | Sizes |
|---|---|---|---|---|---|---|---|
| 1 | K21.06305 | 947 260 6522 | | Kit | KAMALI MİL KOMPLE | MAIN SHAFT COMPLETE | |
| 2 | K21.03432 | 945 990 0250 | (945 990 0150) | 1 | KAMALI MİL SOMUNU | NUT | M30X1,5 |
| 3 | K21.03619 | 015 981 1605 | (013 981 1105) | 1 | KAMALI MİL UÇ BİLYA | ROLLER BEARING | 39,69X40,39mm |
| 4 | K21.94095 | | | 1 | 3.VİT.ÖNBİLYA AYAR PULU | THRUST WASHER | 1,70mm |
| 5 | K21.03629 | 015 981 7605 | (015 981 2005) | 1 | 4.VİTES DİŞLİSİ ÖN BİLYA | ROLLER BEARING | 50X41mm |
| 6 | K21.03026 | 945 262 8810 | (945 262 9310) | 1 | 4.VİTES DİŞLİSİ 29 DİŞ | GEAR 4th 29 T. | |
| 7 | K21.03631 | 015 981 7705 | (014 981 1605) | 1 | 4.VİTES DİŞLİSİ ARKA BİLYA | ROLLER BEARING | 55X23mm |
| 8 | K21.03027 | 945 262 0534 | (389 262 5034) | 2 | 3./4.VİTES SENKROMENÇ | ENGAGING RING | |
| 9 | K21.03016 | 389 262 0737 | (387 262 0937) | 4 | 1./2./3./4.VİTES FRENLEME (Mo) | SYNCHRONIZING CONE / Mo | |
| 10 | K21.06588 | 387 262 8173 | | 1 | 3./4.VİT.SENK.YIL.DİŞLİ EMN.SEK. | RETAINING RING | 2,80mm |
| 11 | K21.03149 | 389 262 4735 | (389 262 4635) | 1 | 3./4.VİTES YILDIZ DİŞLİ | SYNCHRONIZER HUB | |
| 12 | K21.03009 | 945 262 2723 | (945 262 0423) | 2 | 1./2./3./4.VİTES HALKA | ENGAGING SLEEVE | |
| 13 | K21.03152 | 945 262 3513 | (930 262 0713) | 1 | 3.VİTES DİŞLİSİ 34 DİŞ | GEAR 3rd 34 T. | |
| 14 | K21.03810 | 018 981 6610 | (010 981 5310) | 2 | 2./3.VİTES MASURA BİLYA | NEEDLE CAGE | 85X93X53mm |
| 15 | K21.03156 | 945 262 4505 | | 1 | KAMALI MİL | MAIN SHAFT | |
| 16 | K21.03158 | 389 262 2812 | (389 262 2512) | 1 | 2.VİTES DİŞLİSİ 39 DİŞ | GEAR 2nd 39 T. | |
| 17 | K21.03025 | 945 262 0434 | (389 262 0034) | 2 | 1./2.VİTES SENKROMENÇ | ENGAGING RING | |
| 18 | K21.03161 | 389 262 2535 | (945 262 0135) | 1 | 1./2.VİTES YILDIZ DİŞLİ | SYNCHRONIZER HUB | |
| 19 | K21.04343 | 387 262 2073 | | 1 | 1./2.VİT.SENK.YIL.DİŞLİ EMN.SEK. | RETAINING RING | 2,40mm |
| 20 | K21.03839 | 945 981 0010 | (018 981 8110) | 1 | 1.VİTES MASURA BİLYA | NEEDLE CAGE | 75X83X48mm |
| 21 | K21.03162 | 946 262 0811 | (389 262 2711) | 1 | 1.VİTES DİŞLİSİ 44 DİŞ | GEAR 1st 44 T. | |
| 22 | K21.03164 | 389 262 3935 | | 1 | GERİ VİTES YILDIZ DİŞLİ | SYNCHRONIZER HUB | |
| 23 | K21.03061 | 389 262 1823 | (389 262 0923) | 1 | GERİ VİTES HALKASI | ENGAGING SLEEVE | |
| 24 | K21.03112 | 389 262 2550 | (389 262 1650) | 1 | GERİ VİTES MASURA BİLYA ÇANAĞI | BEARING RACE | |
| 25 | K21.03803 | 009 981 1510 | (017 981 7810) | 1 | GERİ VİTES MASURA BİLYA | NEEDLE CAGE | 78X86X35mm |
| 26 | K21.03168 | 945 262 3333 | (389 262 2133) | 1 | GERİ VİTES DİŞLİSİ 40 DİŞ | REVERSE GEAR 40 T. | |
| 27 | K21.03623 | 014 981 6105 | (016 981 1305) | 1 | KAMALI MİL ARKA BİLYA | ROLLER BEARING | 60X130X33,2mm |
| 28 | K21.04331 | 007 994 1841 | (006 994 9941) | 1 | KAMALI MİL ARKA BİLYA SEKMANI | RETAINING RING | 2,50mm |



**Original parts names, oem numbers, symbols and descriptions used in this catalogue are for reference purposes only.**

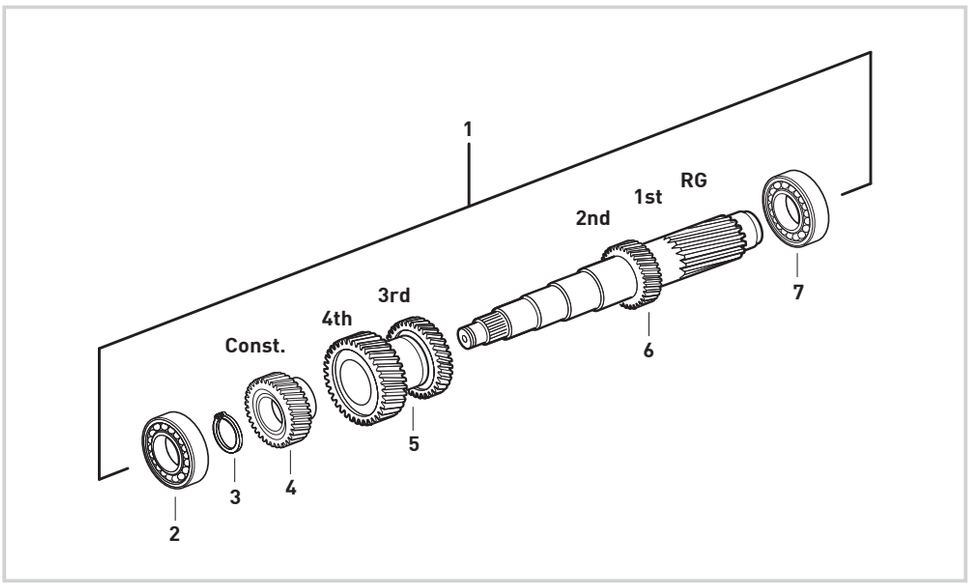


| Fig. | Kacmaz No. | Oem No | Oem Old No | Pcs. | Ürün Tanımı | Description | Sizes |
|---|---|---|---|---|---|---|---|
| 1 | K21.03553 | 945 260 7024 | | Kit | GRUP MİLİ KOMPLE | COUNTER SHAFT COMPLETE | |
| 2 | K21.03606 | 015 981 9005 | (014 981 1405) | 1 | GRUP MİLİ ÖN BİLYA | ROLLER BEARING | 50,8X100X35mm |
| 3 | K21.06425 | 389 994 0041 | | 1 | GRUP MİLİ ÖN BİLYA SEKMANI | RETAINING RING | 2,50mm |
| 4 | K21.03170 | 945 263 0710 | (945 263 0810) | 1 | TAKVİYE DİŞLİ KARŞILIĞI 31 DİŞ | CONSTANT GEAR 31 T. | |
| | | | (389 263 1410) | | | | |
| 5 | K21.03171 | 945 263 2913 | (945 263 0213) | 1 | 3./4.VİTES DİŞLİ KARŞILIĞI 27/34 DİŞ | DOUB.GEAR 3rd/4th 27/34 T. | |
| | | | (945 263 1013) | | | | |
| | | | (945 263 0513) | | | | |
| | | | (945 263 1413) | | | | |
| | | | (945 263 1513) | | | | |
| | | | (945 263 7113) | | | | |
| | | | (945 263 7013) | | | | |
| | | | (945 263 6913) | | | | |
| 6 | K21.03175 | 945 263 2902 | (945 263 0902) | 1 | GRUP MİLİ 16/21 DİŞ | COUNTER SHAFT 16/21 T. | |
| | | | (389 263 3102) | | | | |
| | | | (389 263 2502) | | | | |
| | | | (389 263 1602) | | | | |
| | | | (389 263 1302) | | | | |
| 7 | K21.03624 | 016 981 1205 | (012 981 9405) | 1 | GRUP MİLİ ARKA BİLYA | ROLLER BEARING | 60X130X33,8mm |



**Original parts names, oem numbers, symbols and descriptions used in this catalogue are for reference purposes only.**

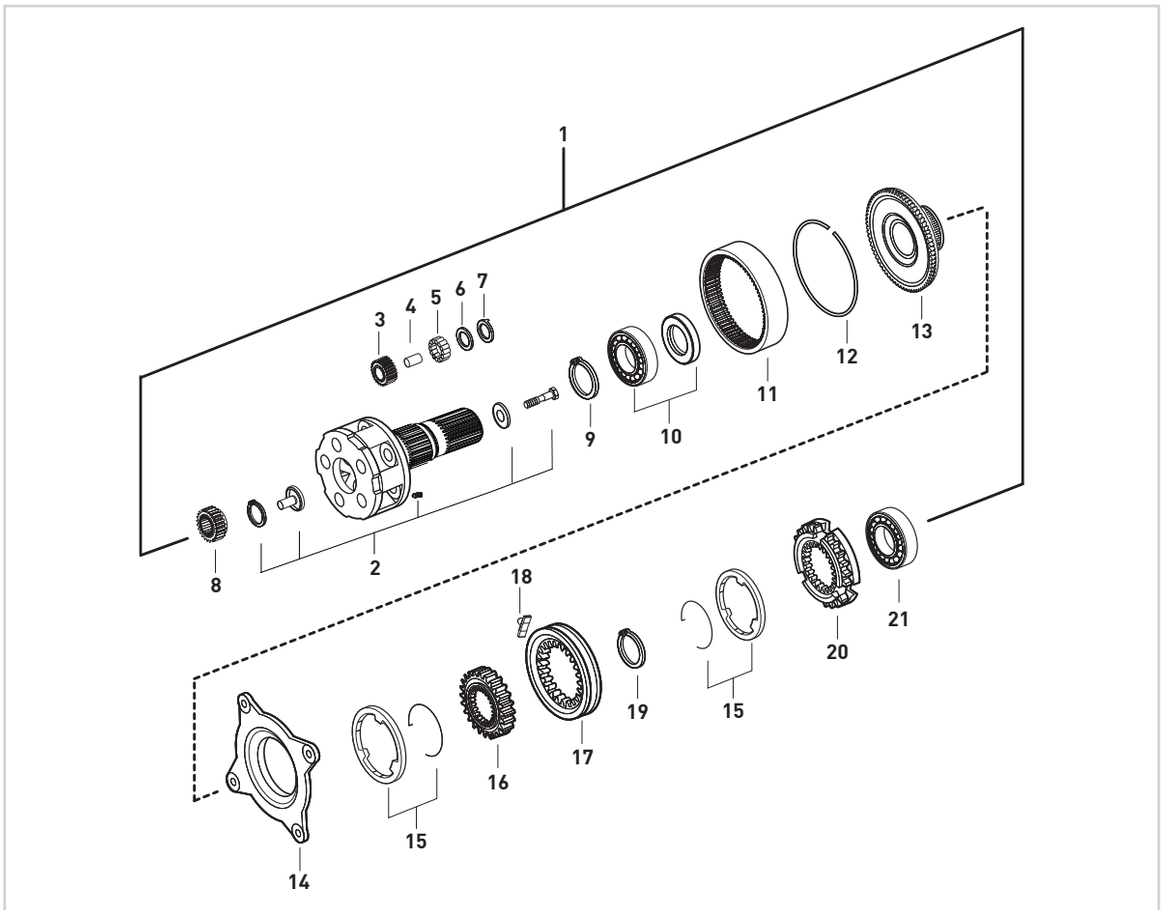


| Fig. | Kacmaz No. | Oem No | Oem Old No | Pcs. | Ürün Tanımı | Description | Sizes |
|---|---|---|---|---|---|---|---|
| 1 | K21.03554 | | | Kit | AĞIR SERİ ARKA AKTARMA KOMPLE | PLANETARY CARRIER COMPLETE | |
| 2 | K21.03180 | 946 260 3561 | (946 260 3661) | 1 | ŞANZIMAN HEYKELİ (BOŞ) | PLANETARY CARRIER (EMPTY) | |
| | | | (945 260 4561) | | | | |
| | | | (945 260 4461) | | | | |
| 3 | K21.03436 | 945 262 0006 | | 5 | HEYKEL KOZA DİŞLİSİ 28 DİŞ | PLANETARY GEAR 28 T. | |
| 4 | K21.03437 | 389 262 0407 | | 5 | HEYKEL KOZA DİŞLİ PİMİ | PLANETARY GEAR PIN | |
| 5 | K21.03816 | 000 981 4186 | (000 981 4386) | 125 | HEYKEL KOZA DİŞLİ TANE BİLYA | NEEDLE ROLLER | D5X39,6 |
| 6 | K21.04074 | 389 262 0162 | (389 262 6462) | 10 | HEYKEL KOZA DİŞLİ PULU | THRUST WASHER | |
| 7 | K21.04075 | 945 262 1162 | (945 262 0162) | 10 | HEYKEL KOZA DİŞLİ PULU | THRUST WASHER | |
| 8 | K21.03169 | 945 262 0909 | (389 262 0809) | 1 | GÜNEŞ DİŞLİ 25 DİŞ | SUN GEAR 25 T. | |
| | | | (389 262 0909) | | | | |
| 9 | K21.06864 | 000472 130000 | | 1 | ÇEMBER DİŞLİ BİLYA SEKMANI | RETAINING RING | 130x4mm |
| 10 | K21.03614 | 008 981 1325 | (004 981 8725) | 1 | ÇEMBER DİŞLİ BİLYASI | ROLLER BEARING | 90X130X14mm |
| 11 | K21.03449 | 945 262 1208 | (945 262 0808) | 1 | ÇEMBER DİŞLİ 85 DİŞ | RING WHEEL 85 T. | |
| 12 | K21.04253 | 389 262 0773 | | 1 | ÇEMBER DİŞLİ SEKMANI | LOCK RING | |
| 13 | K21.03442 | 930 262 0125 | (389 262 1425) | 1 | PLANET ÇAN DİŞLİ 85 DİŞ | CARRIER HUB 85 T. | |
| 14 | K21.03037 | 947 260 3036 | (947 260 0836) | 1 | TABLA SENKROMENÇ | FOLLOWER RING | |
| 15 | K21.03185 | 947 260 0945 | | 2 | AĞIR SERİ FRENLEME (Mo) | SYNCHRONIZING CONE / Mo | |
| 16 | K21.03079 | 389 262 4935 | (389 262 2035) | 1 | AĞIR SERİ YILDIZ DİŞLİ 73 DİŞ | SYNCHRONIZER HUB 73 T. | |
| 17 | K21.03033 | 945 262 6923 | (930 262 0623) | 1 | AĞIR SERİ HALKA | ENGAGING SLEEVE | |
| 18 | K21.03431 | 960 265 0049 | (947 265 0349) | 2 | AĞIR SERİ HİLAL PABUCU | SLIDING PAD | |
| 19 | K21.04356 | 000471 120000 | | 1 | AĞIR SERİ YILDIZ DİŞLİ SEKMANI | RETAINING RING | |
| 20 | K21.03186 | 945 262 3834 | | 1 | SERİ SENKROMENÇ | ENGAGING RING | |
| 21 | K21.03625 | 008 981 3025 | (008 981 5225) | 1 | ŞANZIMAN ARKA BİLYA | ROLLER BEARING | 80X150X28mm |



**Original parts names, oem numbers, symbols and descriptions used in this catalogue are for reference purposes only.**

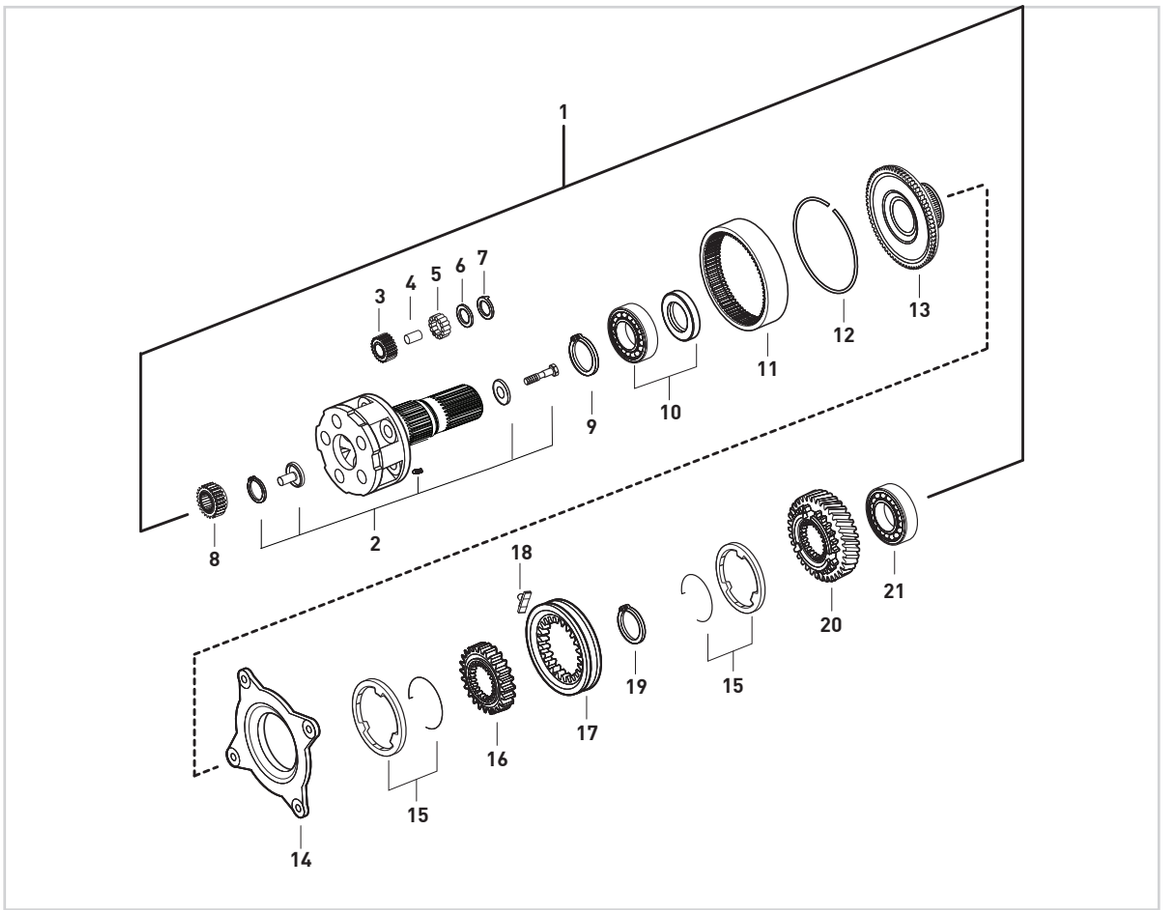


| Fig. | Kacmaz No. | Oem No | Oem Old No | Pcs. | Ürün Tanımı | Description | Sizes |
|---|---|---|---|---|---|---|---|
| 1 | K21.06384 | | | Kit | AĞIR SERİ ARKA AKTARMA KOMPLE | PLANETARY CARRIER COMPLETE | |
| 2 | K21.03180 | 946 260 3561 | (946 260 3661) | 1 | ŞANZIMAN HEYKELİ (BOŞ) | PLANETARY CARRIER (EMPTY) | |
| | | | (945 260 4561) | | | | |
| | | | (945 260 4461) | | | | |
| 3 | K21.03436 | 945 262 0006 | | 5 | HEYKEL KOZA DİŞLİSİ 28 DİŞ | PLANETARY GEAR 28 T. | |
| 4 | K21.03437 | 389 262 0407 | | 5 | HEYKEL KOZA DİŞLİ PİMİ | PLANETARY GEAR PIN | |
| 5 | K21.03816 | 000 981 4186 | (000 981 4386) | 125 | HEYKEL KOZA DİŞLİ TANE BİLYA | NEEDLE ROLLER | D5X39,6 |
| 6 | K21.04074 | 389 262 0162 | (389 262 6462) | 10 | HEYKEL KOZA DİŞLİ PULU | THRUST WASHER | |
| 7 | K21.04075 | 945 262 1162 | (945 262 0162) | 10 | HEYKEL KOZA DİŞLİ PULU | THRUST WASHER | |
| 8 | K21.03169 | 945 262 0909 | (389 262 0809) | 1 | GÜNEŞ DİŞLİ 25 DİŞ | SUN GEAR 25 T. | |
| | | | (389 262 0909) | | | | |
| 9 | K21.06864 | 000472 130000 | | 1 | ÇEMBER DİŞLİ BİLYA SEKMANI | RETAINING RING | 130X4mm |
| 10 | K21.03614 | 008 981 1325 | (004 981 8725) | 1 | ÇEMBER DİŞLİ BİLYASI | ROLLER BEARING | 90X130X14mm |
| 11 | K21.03449 | 945 262 1208 | (945 262 0808) | 1 | ÇEMBER DİŞLİ 85 DİŞ | RING WHEEL 85 T. | |
| 12 | K21.04253 | 389 262 0773 | | 1 | ÇEMBER DİŞLİ SEKMANI | LOCK RING | |
| 13 | K21.03442 | 930 262 0125 | (389 262 1425) | 1 | PLANET ÇAN DİŞLİ 85 DİŞ | CARRIER HUB 85 T. | |
| 14 | K21.03037 | 947 260 3036 | (947 260 0836) | 1 | TABLA SENKROMENÇ | FOLLOWER RING | |
| 15 | K21.03185 | 947 260 0945 | | 2 | AĞIR SERİ FRENLEME (Mo) | SYNCHRONIZING CONE / Mo | |
| 16 | K21.03079 | 389 262 4935 | (389 262 2035) | 1 | AĞIR SERİ YILDIZ DİŞLİ 73 DİŞ | SYNCHRONIZER HUB 73 T. | |
| 17 | K21.03033 | 945 262 6923 | (930 262 0623) | 1 | AĞIR SERİ HALKA | ENGAGING SLEEVE | |
| 18 | K21.03431 | 960 265 0049 | (947 265 0349) | 2 | AĞIR SERİ HİLAL PABUCU | SLIDING PAD | |
| 19 | K21.04356 | 000471 120000 | | 1 | AĞIR SERİ YILDIZ DİŞLİ SEKMANI | RETAINING RING | |
| 20 | K21.03188 | 930 264 0320 | | 1 | RETARDER DİŞLİSİ 64 DİŞ | RETARDER GEAR 64 T. | |
| 21 | K21.03625 | 008 981 3025 | (008 981 5225) | 1 | ŞANZIMAN ARKA BİLYA | ROLLER BEARING | 80X150X28mm |



**Original parts names, oem numbers, symbols and descriptions used in this catalogue are for reference purposes only.**

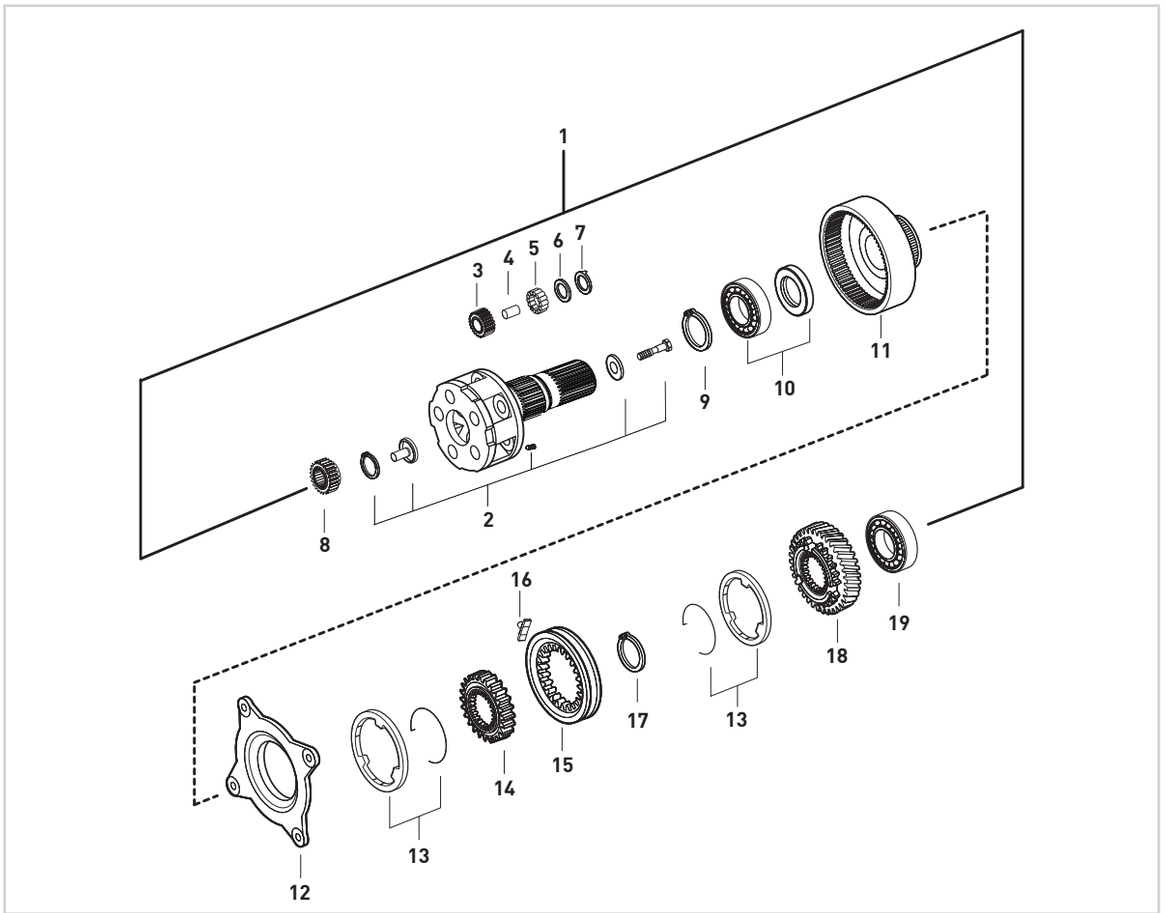


| Fig. | Kacmaz No. | Oem No | Oem Old No | Pcs. | Ürün Tanımı | Description | Sizes |
|---|---|---|---|---|---|---|---|
| 1 | K21.06383 | | | Kit | AĞIR SERİ ARKA AKTARMA KOMPLE | PLANETARY CARRIER COMPLETE | |
| 2 | K21.03180 | 946 260 3561 | (946 260 3661) | 1 | ŞANZIMAN HEYKELİ (BOŞ) | PLANETARY CARRIER (EMPTY) | |
| | | | (945 260 4561) | | | | |
| | | | (945 260 4461) | | | | |
| 3 | K21.03436 | 945 262 0006 | | 5 | HEYKEL KOZA DİŞLİSİ 28 DİŞ | PLANETARY GEAR 28 T. | |
| 4 | K21.03437 | 389 262 0407 | | 5 | HEYKEL KOZA DİŞLİ PİMİ | PLANETARY GEAR PIN | |
| 5 | K21.03816 | 000 981 4186 | (000 981 4386) | 125 | HEYKEL KOZA DİŞLİ TANE BİLYA | NEEDLE ROLLER | D5X39,6 |
| 6 | K21.04074 | 389 262 0162 | (389 262 6462) | 10 | HEYKEL KOZA DİŞLİ PULU | THRUST WASHER | |
| 7 | K21.04075 | 945 262 1162 | (945 262 0162) | 10 | HEYKEL KOZA DİŞLİ PULU | THRUST WASHER | |
| 8 | K21.03169 | 945 262 0909 | (389 262 0809) | 1 | GÜNEŞ DİŞLİ 25 DİŞ | SUN GEAR 25 T. | |
| | | | (389 262 0909) | | | | |
| 9 | K21.06864 | 000472 130000 | | 1 | ÇEMBER DİŞLİ BİLYA SEKMANI | RETAINING RING | 130x4mm |
| 10 | K21.03614 | 008 981 1325 | (004 981 8725) | 1 | ÇEMBER DİŞLİ BİLYASI | ROLLER BEARING | 90X130X14mm |
| 11 | K21.03438 | 945 262 0108 | (389 262 0808) | 1 | ÇEMBER DİŞLİ 85 DİŞ | RING WHEEL 85 T. | |
| 12 | K21.03018 | 389 260 2036 | | 1 | TABLA SENKROMENÇ | FOLLOWER RING | |
| 13 | K21.03017 | 389 262 0537 | (389 262 0037) | 2 | AĞIR SERİ FRENLEME (Mo) | SYNCHRONIZING CONE / Mo | |
| 14 | K21.03079 | 389 262 4935 | (389 262 2035) | 1 | AĞIR SERİ YILDIZ DİŞLİ 73 DİŞ | SYNCHRONIZER HUB 73 T. | |
| 15 | K21.03028 | 945 262 6623 | (945 262 0823) | 1 | AĞIR SERİ HALKA 73 DİŞ | ENGAGING SLEEVE 73 T. | |
| | | | (389 262 1623) | | | | |
| | | | (389 262 3823) | | | | |
| 16 | K21.03406 | 389 265 2449 | (389 265 1249) | 2 | AĞIR SERİ HİLAL PABUCU | SLIDING PAD | |
| 17 | K21.04356 | 000471 120000 | | 1 | AĞIR SERİ YILDIZ DİŞLİ SEKMANI | RETAINING RING | |
| 18 | K21.06050 | 945 264 0130 | (389 264 0730) | 1 | RETARDER DİŞLİSİ 63 DİŞ | RETARDER GEAR 63 T. | |
| 19 | K21.03625 | 008 981 3025 | (008 981 5225) | 1 | ŞANZIMAN ARKA BİLYA | ROLLER BEARING | 80X150X28mm |



Original parts names, oem numbers, symbols and descriptions used in this catalogue are for reference purposes only.

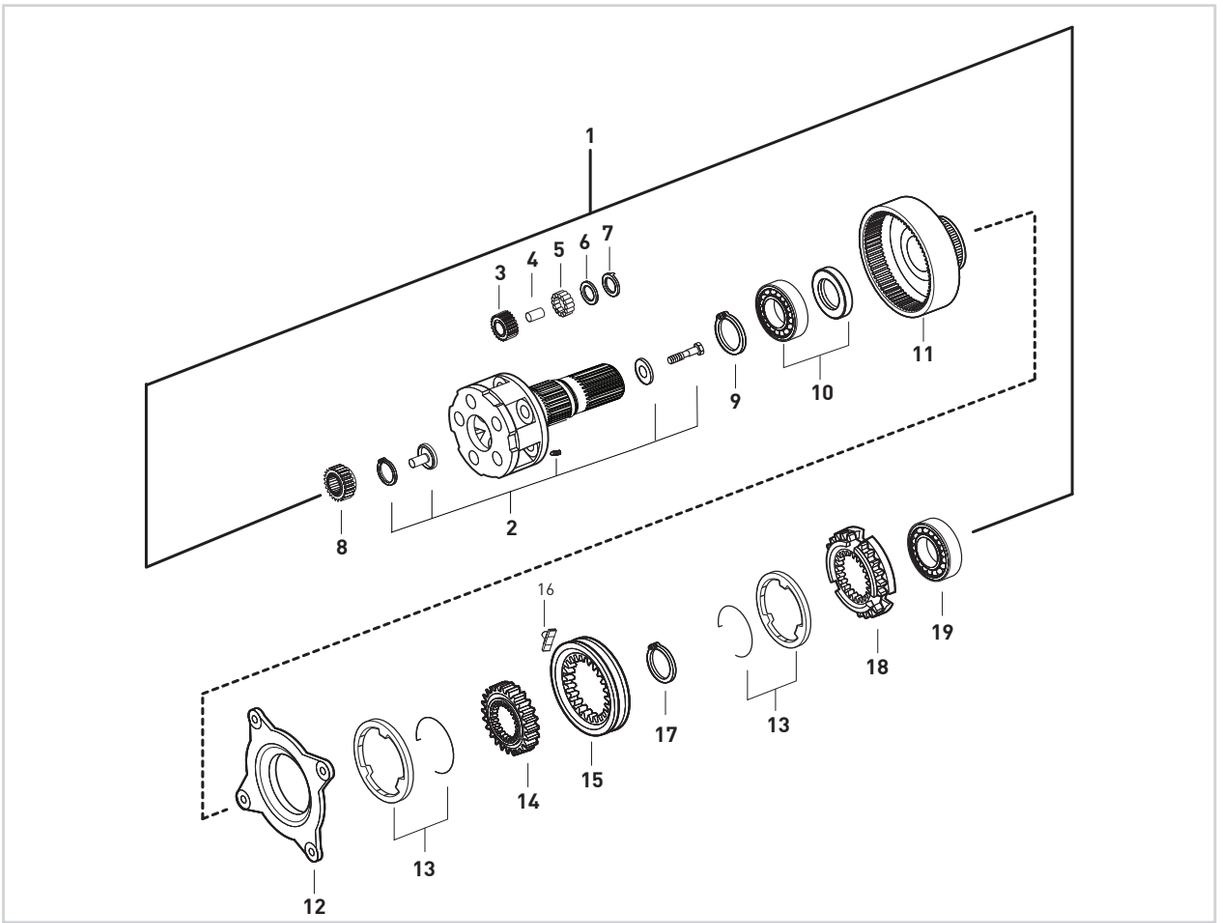


| Fig. | Kacmaz No. | Oem No | Oem Old No | Pcs. | Ürün Tanımı | Description | Sizes |
|---|---|---|---|---|---|---|---|
| 1 | K21.06382 | | | Kit | AĞIR SERİ ARKA AKTARMA KOMPLE | PLANETARY CARRIER COMPLETE | |
| 2 | K21.03180 | 946 260 3561 | (946 260 3661) | 1 | ŞANZIMAN HEYKELİ (BOŞ) | PLANETARY CARRIER (EMPTY) | |
| | | | (945 260 4561) | | | | |
| | | | (945 260 4461) | | | | |
| 3 | K21.03436 | 945 262 0006 | | 5 | HEYKEL KOZA DİŞLİSİ 28 DİŞ | PLANETARY GEAR 28 T. | |
| 4 | K21.03437 | 389 262 0407 | | 5 | HEYKEL KOZA DİŞLİ PİMİ | PLANETARY GEAR PIN | |
| 5 | K21.03816 | 000 981 4186 | (000 981 4386) | 125 | HEYKEL KOZA DİŞLİ TANE BİLYA | NEEDLE ROLLER | D5X39,6 |
| 6 | K21.04074 | 389 262 0162 | (389 262 6462) | 10 | HEYKEL KOZA DİŞLİ PULU | THRUST WASHER | |
| 7 | K21.04075 | 945 262 1162 | (945 262 0162) | 10 | HEYKEL KOZA DİŞLİ PULU | THRUST WASHER | |
| 8 | K21.03169 | 945 262 0909 | (389 262 0809) | 1 | GÜNEŞ DİŞLİ 25 DİŞ | SUN GEAR 25 T. | |
| | | | (389 262 0909) | | | | |
| 9 | K21.06864 | 000472 130000 | | 1 | ÇEMBER DİŞLİ BİLYA SEKMANI | RETAINING RING | 130x4mm |
| 10 | K21.03614 | 008 981 1325 | (004 981 8725) | 1 | ÇEMBER DİŞLİ BİLYASI | ROLLER BEARING | 90X130X14mm |
| 11 | K21.03438 | 945 262 0108 | (389 262 0808) | 1 | ÇEMBER DİŞLİ 85 DİŞ | RING WHEEL 85 T. | |
| 12 | K21.03018 | 389 260 2036 | | 1 | TABLA SENKROMENÇ | FOLLOWER RING | |
| 13 | K21.03017 | 389 262 0537 | (389 262 0037) | 2 | AĞIR SERİ FRENLEME (Mo) | SYNCHRONIZING CONE / Mo | |
| 14 | K21.03079 | 389 262 4935 | (389 262 2035) | 1 | AĞIR SERİ YILDIZ DİŞLİ 73 T. | SYNCHRONIZER HUB 73 T. | |
| 15 | K21.03028 | 945 262 6623 | (945 262 0823) | 1 | AĞIR SERİ HALKA 73 DİŞ | ENGAGING SLEEVE 73 T. | |
| | | | (389 262 1623) | | | | |
| | | | (389 262 3823) | | | | |
| 16 | K21.03406 | 389 265 2449 | (389 265 1249) | 2 | AĞIR SERİ HİLAL PABUCU | SLIDING PAD | |
| 17 | K21.04356 | 000471 120000 | | 1 | AĞIR SERİ YILDIZ DİŞLİ SEKMANI | RETAINING RING | |
| 18 | K21.03187 | 389 262 9234 | (945 262 1234) | 1 | SERİ SENKROMENÇ | ENGAGING RING | |
| 19 | K21.03625 | 008 981 3025 | (008 981 5225) | 1 | ŞANZIMAN ARKA BİLYA | ROLLER BEARING | 80X150X28mm |



**Original parts names, oem numbers, symbols and descriptions used in this catalogue are for reference purposes only.**

# NOTES / NOTLAR



Original parts names, oem numbers, symbols and descriptions used in this catalogue are for reference purposes only.

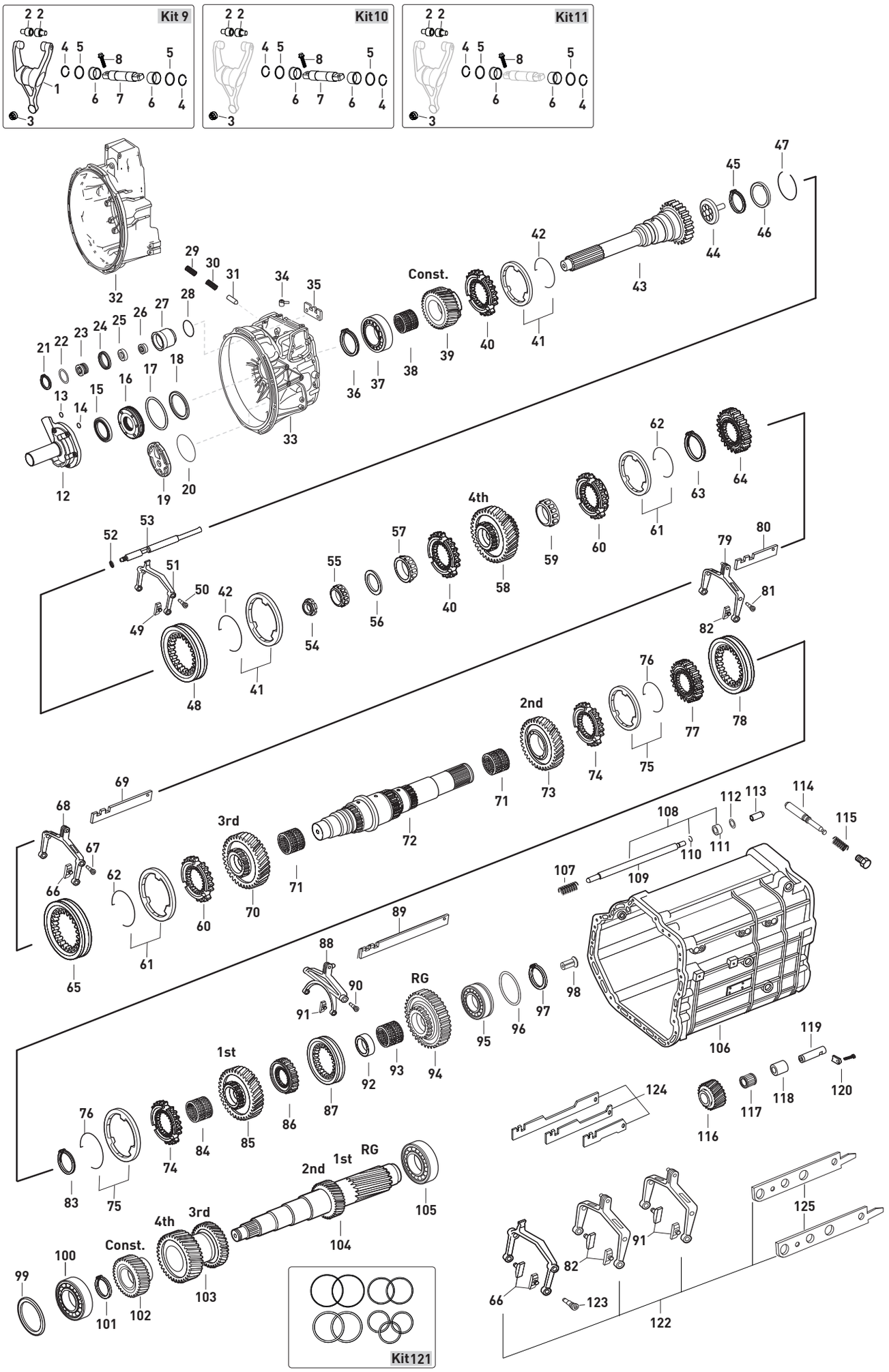




Original parts names, oem numbers, symbols and descriptions used in this catalogue are for reference purposes only.

| Fig. | Kacmaz No | Oem No | Oem Old No | Pcs. | Ürün Tanımı | Description | Sizes | Not | 715510 | 715516 | 715517 | 715513 | 715518 |
|---|---|---|---|---|---|---|---|---|---|---|---|---|---|
| 1 | | 655 250 1513 | | 1 | DEBRİYAJ ÇATALI | RELEASE FORK | | | ♦ | ♦ | ♦ | ♦ | ♦ |
| 2 | K21.07038 | 000 254 0017 | | 2 | DEBRİYAJ ÇATAL BURÇ VE PİMİ | CAM ROLLER | | | ♦ | ♦ | ♦ | ♦ | ♦ |
| 3 | K21.07040 | 000 254 0335 | | 1 | DEBRİYAJ ÇATAL PLASTİK BURCU | PLASTIC BUSHING | | | ♦ | ♦ | ♦ | ♦ | ♦ |
| 4 | | 912009 035100 | | 2 | DEBRİYAJ ÇATAL MİL SEKMANI | RETAINING RING | | | ♦ | ♦ | ♦ | ♦ | ♦ |
| 5 | | 000988 036100 | | 2 | DEBRİYAJ ÇATAL MİL AYAR PULU | WASHER | | | ♦ | ♦ | ♦ | ♦ | ♦ |
| 6 | | 002 992 1501 | | 2 | DEBRİYAJ ÇATAL MİL BURCU | BUSHING | 36,5X43X16mm | | ♦ | ♦ | ♦ | ♦ | ♦ |
| 7 | | 655 254 0206 | | 1 | DEBRİYAJ ÇATAL MİLİ | SHAFT | | | ♦ | ♦ | ♦ | ♦ | ♦ |
| 8 | | 910105 012026 | | 2 | DEBRİYAJ ÇATAL MİL VİDASI | SCREW | M12X40mm | | ♦ | ♦ | ♦ | ♦ | ♦ |
| 9 | K21.07036 | 655 250 1813 | | Kit | DEBRİYAJ ÇATALI KOMPLE | RELEASE FORK COMPLETE | | | ♦ | ♦ | ♦ | ♦ | ♦ |
| 9 | K21.97036 | 655 250 1813-S | | Kit | DEB.ÇATALI KOMPLE (BİLYALI TİP) | RELEASE FORK COMPLETE | | WITH BEARING | ♦ | ♦ | ♦ | ♦ | ♦ |
| 10 | K21.07037 | | | Kit | DEBRİYAJ ÇATALI TAMİR TAKIMI | RELEASE FORK REPAIR KIT | | | ♦ | ♦ | ♦ | ♦ | ♦ |
| 11 | K21.07039 | | | Kit | DEBRİYAJ ÇATALI TAMİR TK.MİLSİZ | RELEASE FORK REPAIR KIT | | W/OUT SHAFT | ♦ | ♦ | ♦ | ♦ | ♦ |
| 12 | K21.03429 | 945 261 1118 | (945 261 0118) | 1 | PRİZDİREK KEÇE KAPAĞI | COVER | | | ♦ | ♦ | ♦ | ♦ | ♦ |
| | | | (945 261 0818) | | | | | | | | | | |
| 13 | K21.06637 | 019 997 8348 | (020 997 7948) | 1 | PRİZDİREK KEÇE KAPAK ORİNGİ | O-RING | 14X4mm | | ♦ | ♦ | ♦ | ♦ | ♦ |
| 14 | K21.06636 | 015 997 4048 | (020 997 8748) | 1 | PRİZDİREK KEÇE KAPAK ORİNGİ | O-RING | 5X3mm | | ♦ | ♦ | ♦ | ♦ | ♦ |
| 15 | K21.03509 | 019 997 0547 | (023 997 7847) | 1 | PRİZDİREK KEÇESİ | OIL SEAL | 56X72X8mm | | ♦ | ♦ | ♦ | ♦ | ♦ |
| | | | (019 997 0647) | | | | | | | | | | |
| | | | (022 997 8547) | | | | | | | | | | |
| 16 | K21.06038 | 389 261 0665 | (389 261 0765) | 1 | YAĞ TUTUCU DİSK | OIL BAFFLE | 75X16mm | | ♦ | ♦ | ♦ | ♦ | ♦ |
| | | | (389 261 0865) | | | | | | | | | | |
| 17 | K21.06635 | 020 997 7848 | | 1 | PRİZDİREK KEÇE KAPAK ORİNGİ | O-RING | 138X3mm | | ♦ | ♦ | ♦ | ♦ | ♦ |
| 18 | K21.04162 | 389 262 4152 | (389 262 0955) | 1 | PRİZDİREK AYAR RAYNELİ | THRUST WASHER | 0,10mm | | ♦ | ♦ | ♦ | ♦ | ♦ |
| 18 | K21.04243 | 389 262 0855 | | 1 | PRİZDİREK AYAR RAYNELİ | THRUST WASHER | 0,15mm | | ♦ | ♦ | ♦ | ♦ | ♦ |
| 18 | K21.04151 | 389 262 0755 | | 1 | PRİZDİREK AYAR RAYNELİ | THRUST WASHER | 0,20mm | | ♦ | ♦ | ♦ | ♦ | ♦ |
| 18 | K21.06715 | 389 262 3055 | | 1 | PRİZDİREK AYAR RAYNELİ | THRUST WASHER | 0,25mm | | ♦ | ♦ | ♦ | ♦ | ♦ |
| 18 | K21.04221 | 389 262 3255 | | 1 | PRİZDİREK AYAR RAYNELİ | THRUST WASHER | 0,31mm | | ♦ | ♦ | ♦ | ♦ | ♦ |
| 18 | K21.04163 | 389 262 3555 | (389 262 0655) | 1 | PRİZDİREK AYAR RAYNELİ | THRUST WASHER | 0,40mm | | ♦ | ♦ | ♦ | ♦ | ♦ |
| | | | (389 262 4452) | | | | | | | | | | |
| 18 | K21.04164 | 389 262 3755 | (389 262 1954) | 1 | PRİZDİREK AYAR RAYNELİ | THRUST WASHER | 0,46mm | | ♦ | ♦ | ♦ | ♦ | ♦ |
| 18 | K21.04246 | 389 262 3855 | | 1 | PRİZDİREK AYAR RAYNELİ | THRUST WASHER | 0,49mm | | ♦ | ♦ | ♦ | ♦ | ♦ |
| 18 | K21.04250 | 389 262 4055 | (389 262 0155) | 1 | PRİZDİREK AYAR RAYNELİ | THRUST WASHER | 0,55mm | | ♦ | ♦ | ♦ | ♦ | ♦ |
| | | | (389 262 2154) | | | | | | | | | | |
| 18 | K21.04167 | 389 262 4255 | (389 262 2254) | 1 | PRİZDİREK AYAR RAYNELİ | THRUST WASHER | 0,61mm | | ♦ | ♦ | ♦ | ♦ | ♦ |
| 18 | K21.04168 | 389 262 4355 | (389 262 2354) | 1 | PRİZDİREK AYAR RAYNELİ | THRUST WASHER | 0,64mm | | ♦ | ♦ | ♦ | ♦ | ♦ |
| 18 | K21.04169 | 389 262 4555 | (389 262 2454) | 1 | PRİZDİREK AYAR RAYNELİ | THRUST WASHER | 0,70mm | | ♦ | ♦ | ♦ | ♦ | ♦ |
| 18 | K21.04170 | 389 262 4755 | (389 262 2554) | 1 | PRİZDİREK AYAR RAYNELİ | THRUST WASHER | 0,76mm | | ♦ | ♦ | ♦ | ♦ | ♦ |
| 18 | K21.04281 | 389 262 4855 | (389 262 0555) | 1 | PRİZDİREK AYAR RAYNELİ | THRUST WASHER | 0,79mm | | ♦ | ♦ | ♦ | ♦ | ♦ |
| 18 | K21.04282 | 389 262 5555 | | 1 | PRİZDİREK AYAR RAYNELİ | THRUST WASHER | 1,00mm | | ♦ | ♦ | ♦ | ♦ | ♦ |
| 18 | K21.04171 | 389 262 9654 | (389 262 2654) | 1 | PRİZDİREK AYAR RAYNELİ | THRUST WASHER | 2,00mm | | ♦ | ♦ | ♦ | ♦ | ♦ |
| 19 | | 976 261 1833 | (976 261 1733) | 1 | GRUP MİLİ ÖN BİLYA KAPAĞI | COVER | | | ♦ | ♦ | ♦ | ♦ | ♦ |
| | | | (976 261 1633) | | | | | | | | | | |
| 20 | K21.06533 | 028 997 2348 | (004 997 2248) | 1 | GRUP MİLİ BİLYA KAPAK ORİNGİ | O-RING | 100X3mm | | ♦ | ♦ | ♦ | ♦ | ♦ |
| 21 | | 006 994 4241 | (000472 065001) | 1 | TAKVİYE PİSTON SEKMANI | RETAINING RING | 65X2,5mm | | ♦ | ♦ | ♦ | ♦ | ♦ |
| 22 | K21.04233 | 389 262 2555 | | 1 | TAKVİYE SİLİNDİR PULU | SPACER WASHER | 0,70mm | | ♦ | ♦ | ♦ | ♦ | ♦ |
| 22 | K21.04234 | 389 262 2655 | | 1 | TAKVİYE SİLİNDİR PULU | SPACER WASHER | 0,90mm | | ♦ | ♦ | ♦ | ♦ | ♦ |
| 22 | K21.04112 | 389 262 3254 | | 1 | TAKVİYE SİLİNDİR PULU | SPACER WASHER | 1,05mm | | ♦ | ♦ | ♦ | ♦ | ♦ |
| 22 | K21.04111 | 389 262 3354 | | 1 | TAKVİYE SİLİNDİR PULU | SPACER WASHER | 1,10mm | | ♦ | ♦ | ♦ | ♦ | ♦ |
| 22 | K21.04109 | 389 262 3554 | | 1 | TAKVİYE SİLİNDİR PULU | SPACER WASHER | 1,20mm | | ♦ | ♦ | ♦ | ♦ | ♦ |
| 22 | K21.04105 | 389 262 2052 | | 1 | TAKVİYE SİLİNDİR PULU | SPACER WASHER | 1,40mm | | ♦ | ♦ | ♦ | ♦ | ♦ |
| 22 | K21.04093 | 389 262 2355 | | 1 | TAKVİYE SİLİNDİR PULU | SPACER WASHER | 1,79mm | | ♦ | ♦ | ♦ | ♦ | ♦ |
| 22 | K21.04025 | 389 262 3252 | | 1 | TAKVİYE SİLİNDİR PULU | SPACER WASHER | 2,00mm | | ♦ | ♦ | ♦ | ♦ | ♦ |
| 22 | K21.04024 | 389 262 3352 | | 1 | TAKVİYE SİLİNDİR PULU | SPACER WASHER | 2,50mm | | ♦ | ♦ | ♦ | ♦ | ♦ |
| 23 | K21.06994 | 945 267 0218 | (387 267 0918) | 1 | TAKVİYE MİL PİSTONU | PISTON | | | ♦ | ♦ | ♦ | ♦ | ♦ |
| | | | (387 267 0618) | | | | | | | | | | |

NOTES :
Parts encoded alphabetic and numaric are used together.

GEARBOX TYPE:
715510 - 715516 - 715517 - G211 - 16 / 17,03 - 1,00
715513 - 715518 - G231 -16 / 17,03 - 1,00

NOTLAR :
Alfabetik ve rakam ile kodlanan parçalar birlikte kullanılır.

ŞANZIMAN TİPLERİ:
715510 - 715516 - 715517 - G211 - 16 / 17,03 - 1,00
715513 - 715518 - G231 -16 / 17,03 - 1,00





Original parts names, oem numbers, symbols and descriptions used in this catalogue are for reference purposes only.

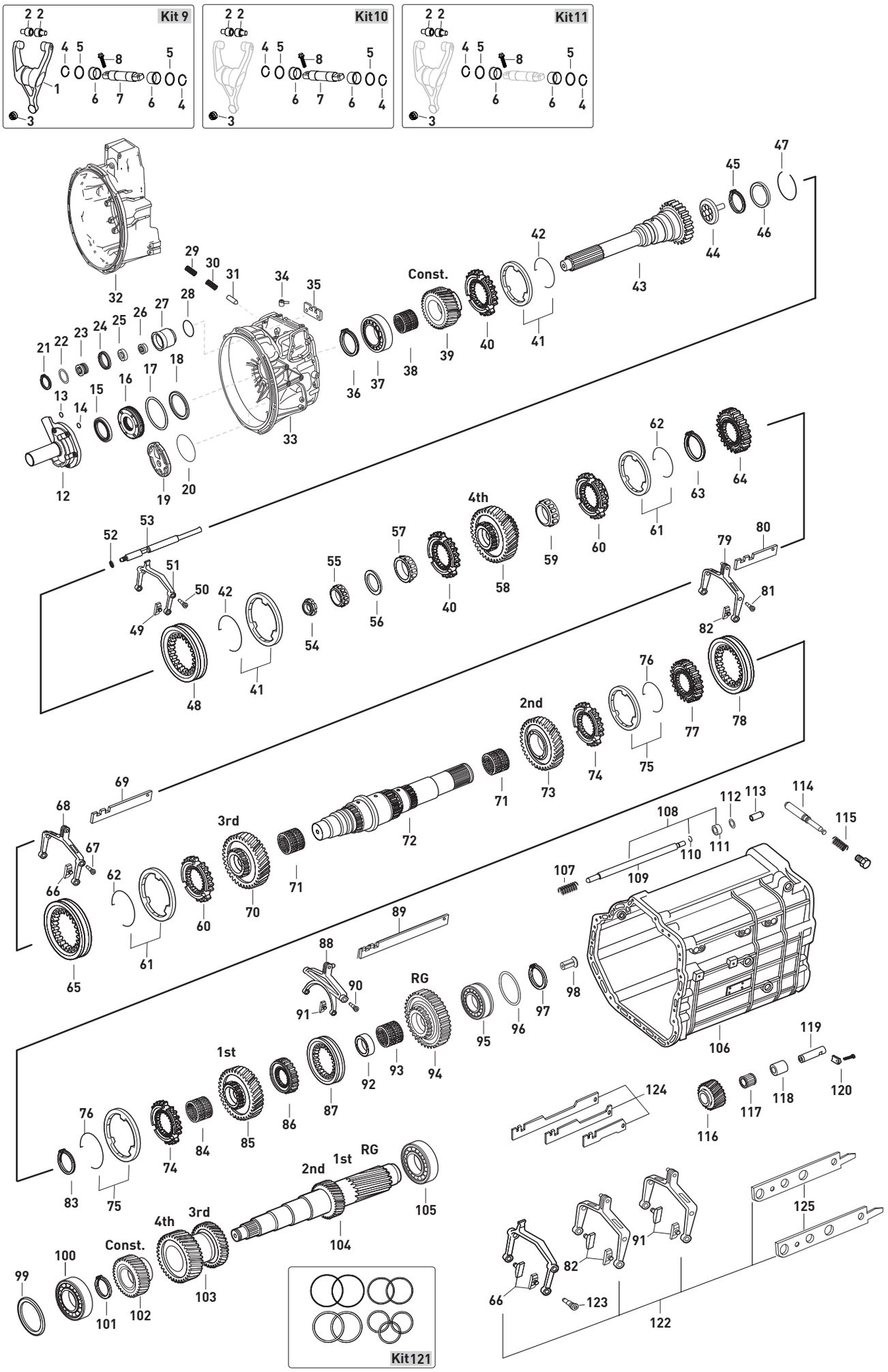






Original parts names, oem numbers, symbols and descriptions used in this catalogue are for reference purposes only.

| Fig. | Kacmaz No | Oem No | Oem Old No | Pcs. | Ürün Tanımı | Description | Sizes | Not | 715510 | 715516 | 715517 | 715513 | 715518 |
|---|---|---|---|---|---|---|---|---|---|---|---|---|---|
| 24 | K21.03524 | 006 997 6447 | (020 997 6647) | 1 | TAKVİYE HAVA KEÇESİ | OIL SEAL | 41X48X11,5mm | | ♦ | ♦ | ♦ | ♦ | ♦ |
| | | | (012 997 3347) | | | | | | | | | | |
| 25 | K21.04178 | 387 267 0650 | (387 267 0250) | 1 | TAKVİYE SİLİNDİR BURCU | BUSHING | 34X22X8mm | | ♦ | ♦ | ♦ | ♦ | ♦ |
| 26 | K21.03523 | 000 267 0197 | (000 267 0397) | 1 | TAKVİYE HİLAL MİL KEÇESİ | OIL SEAL | 22X32X8mm | | ♦ | ♦ | ♦ | ♦ | ♦ |
| 27 | K21.06036 | 945 267 0819 | (945 267 0119) | 1 | TAKVİYE SİLİNDİR GÖVDESİ | CYLINDER | | (A) | ♦ | ♦ | ♦ | ♦ | ♦ |
| | | | (945 267 0719) | | | | | | | | | | |
| | | | (945 267 0019) | | | | | | | | | | |
| 27 | K21.06056 | 945 267 0619 | (945 267 0219) | 1 | TAKVİYE SİLİNDİR GÖVDESİ | CYLINDER | | (B) | ♦ | | | ♦ | |
| 28 | K21.06534 | 022 997 4248 | | 1 | TAKVİYE SİLİNDİR ORİNGİ | O-RING | 55,6X3mm | (A) | ♦ | ♦ | ♦ | ♦ | ♦ |
| 28 | | 016 997 6648 | | 1 | TAKVİYE SİLİNDİR ORİNGİ | O-RING | | (B) | ♦ | | | ♦ | |
| 29 | K21.06015 | 387 993 4501 | | 1 | ŞANZ.TAKVİYE KİLİT FİŞEK YAYI | SPRING | 6,2X63mm | | ♦ | ♦ | ♦ | ♦ | ♦ |
| 30 | K21.03500 | 387 993 4401 | (387 993 2501) | 1 | KİLİT YAYI | SPRING | 9,8X63,3mm | | ♦ | ♦ | ♦ | ♦ | ♦ |
| 31 | K21.03492 | 389 267 1174 | (387 267 0074) | 1 | KİLİT FİŞEĞİ | PIN | | | ♦ | ♦ | ♦ | ♦ | ♦ |
| 32 | | 942 250 0105 | | 1 | ŞANZIMAN ÖN GÖVDE | HOUSING | PTO | | | | | ♦ | |
| 33 | K21.06526 | 945 260 8412 | (945 261 7501) | 1 | ŞANZIMAN ÖN GÖVDE | HOUSING | | | ♦ | ♦ | ♦ | ♦ | |
| 33 | | 945 260 5411 | | 1 | ŞANZIMAN ÖN GÖVDE | HOUSING | | | | | | ♦ | |
| 33 | | 960 260 6912 | | 1 | ŞANZIMAN ÖN GÖVDE | HOUSING | | | | | | | ♦ |
| 34 | K21.06529 | 437 261 0082 | (945 261 0082) | 1 | ŞANZIMAN HAVALANDIRMA | CAP | | | ♦ | ♦ | ♦ | ♦ | ♦ |
| 35 | K21.06509 | 945 267 0459 | | 1 | VİTES HİLAL ÇITA KİLİTLEMESİ | BRACKET | | | ♦ | ♦ | ♦ | ♦ | ♦ |
| 36 | K21.04347 | 387 262 8673 | | 1 | PRİZDİREK ÖN BİLYA SEKMANI | RETAINING RING | 3,15mm | | ♦ | ♦ | ♦ | ♦ | ♦ |
| 36 | K21.04346 | 387 262 8773 | | 1 | PRİZDİREK ÖN BİLYA SEKMANI | RETAINING RING | 3,20mm | | ♦ | ♦ | ♦ | ♦ | ♦ |
| 36 | K21.07015 | 387 262 8873 | | 1 | PRİZDİREK ÖN BİLYA SEKMANI | RETAINING RING | 3,25mm | | ♦ | ♦ | ♦ | ♦ | ♦ |
| 36 | K21.04348 | 387 262 8973 | | 1 | PRİZDİREK ÖN BİLYA SEKMANI | RETAINING RING | 3,30mm | | ♦ | ♦ | ♦ | ♦ | ♦ |
| 36 | K21.07016 | 387 262 9073 | | 1 | PRİZDİREK ÖN BİLYA SEKMANI | RETAINING RING | 3,35mm | | ♦ | ♦ | ♦ | ♦ | ♦ |
| 36 | K21.04349 | 387 262 9173 | | 1 | PRİZDİREK ÖN BİLYA SEKMANI | RETAINING RING | 3,40mm | | ♦ | ♦ | ♦ | ♦ | ♦ |
| 36 | K21.07017 | 387 262 9273 | | 1 | PRİZDİREK ÖN BİLYA SEKMANI | RETAINING RING | 3,45mm | | ♦ | ♦ | ♦ | ♦ | ♦ |
| 36 | K21.04350 | 387 262 9373 | | 1 | PRİZDİREK ÖN BİLYA SEKMANI | RETAINING RING | 3,50mm | | ♦ | ♦ | ♦ | ♦ | ♦ |
| 37 | K21.03618 | 011 981 1305 | (014 981 9005) | 1 | PRİZDİREK ÖN BİLYA | ROLLER BEARING | 75X140X34,25mm | | ♦ | ♦ | ♦ | ♦ | ♦ |
| | | | (008 981 8605) | | | | | | | | | | |
| | | | (008 981 2605) | | | | | | | | | | |
| 38 | K21.03818 | 018 981 8210 | (018 981 6410) | 1 | TAKVİYE MASURA BİLYA | NEEDLE CAGE | 84X90X39,5mm | | ♦ | ♦ | ♦ | ♦ | ♦ |
| 39 | K21.03212 | 945 262 4410 | (945 262 4510) | 1 | TAKVİYE DİŞLİSİ 27 DİŞ | CONSTANT GEAR 27 T. | | | ♦ | ♦ | ♦ | ♦ | ♦ |
| | | | (945 262 7810) | | | | | | | | | | |
| 40 | K21.03024 | 389 262 5434 | (945 262 0334) | 2 | TAKVİYE SENKROMENÇ | ENGAGING RING | | (1) | ♦ | ♦ | ♦ | ♦ | ♦ |
| | | | (945 262 0134) | | | | | | | | | | |
| 40 | K21.03147 | 945 262 7734 | (945 262 3634) | 2 | TAKVİYE SENKROMENÇ | ENGAGING RING | | (2) | ♦ | ♦ | ♦ | ♦ | ♦ |
| 41 | K21.03015 | 389 262 0637 | (387 262 0837) | 2 | TAKVİYE FRENLEME (Mo) | SYNCHRONIZING CONE / Mo | | (1) | ♦ | ♦ | ♦ | ♦ | ♦ |
| | | | (389 262 1037) | | | | | | | | | | |
| 41 | K21.03401 | 945 260 0450 | | 2 | TAKVİYE FRENLEME (C) | SYNCHRONIZING CONE / C | | (1) | ♦ | ♦ | ♦ | ♦ | ♦ |
| 41 | K21.03136 | 945 260 2245 | (946 262 6337) | 2 | TAKVİYE FRENLEME (Mo) | SYNCHRONIZING CONE / Mo | | (2) | ♦ | ♦ | ♦ | ♦ | ♦ |
| 41 | K21.06274 | 947 260 2845 | (947 260 0545) | 2 | TAKVİYE FRENLEME (C) | SYNCHRONIZING CONE / C | | (2) | ♦ | ♦ | ♦ | ♦ | ♦ |
| 42 | K21.03044 | 387 262 1093 | (387 262 0693) | 2 | FRENLEME TELİ | SPRING | | | ♦ | ♦ | ♦ | ♦ | ♦ |
| | | | (960 262 1393) | | | | | | | | | | |
| 43 | K21.03217 | 389 262 7601 | (945 262 3201) | 1 | PRİZDİREK 60 DİŞ | INPUT SHAFT 60 T. | | | ♦ | ♦ | ♦ | ♦ | ♦ |
| | | | (945 262 1203) | | | | | | | | | | |
| 43 | K21.07023 | 945 262 8801 | | 1 | PRİZDİREK | INPUT SHAFT | PTO | | ♦ | | | | |
| 43 | | 945 262 6701 | | 1 | PRİZDİREK 60 DİŞ | INPUT SHAFT 60 T. | | | ♦ | | | | |
| 43 | | 945 262 1901 | | 1 | PRİZDİREK | INPUT SHAFT | | | ♦ | | | | |
| 43 | | 945 262 6003 | | 1 | PRİZDİREK 60 DİŞ | INPUT SHAFT 60 T. | PTO | | ♦ | | | ♦ | |
| 43 | | 945 262 5703 | | 1 | PRİZDİREK | INPUT SHAFT | | | ♦ | | | | |
| 43 | | 945 262 8501 | | 1 | PRİZDİREK 60 DİŞ | INPUT SHAFT 60 T. | | | ♦ | | | | |
| 43 | | 389 262 7901 | | 1 | PRİZDİREK | INPUT SHAFT | | | | | | ♦ | |
| 44 | K21.04001 | 976 269 0034 | (960 269 0434) | 1 | PRİZDİREK YAĞ PİPETİ | OIL COLLECTOR | | | ♦ | ♦ | ♦ | ♦ | ♦ |
| 45 | K21.04002 | 000 994 9841 | | 1 | PRİZDİREK YAĞ PİPET SEKMANI | RETAINING RING | | | ♦ | ♦ | ♦ | ♦ | ♦ |
| 46 | K21.03510 | 001 262 0362 | (000 262 8762) | 1 | PRİZDİREK ARKA KEÇE | OIL SEAL | 78,5X105X7mm | | ♦ | | | ♦ | |

NOTES :
Parts encoded alphabetic and numaric are used together.

GEARBOX TYPE:
715510 - 715516 - 715517 - G211 - 16 / 17,03 - 1,00
715513 - 715518 - G231 -16 / 17,03 - 1,00

NOTLAR :
Alfabetik ve rakam ile kodlanan parçalar birlikte kullanılır.

ŞANZIMAN TİPLERİ:
715510 - 715516 - 715517 - G211 - 16 / 17,03 - 1,00
715513 - 715518 - G231 -16 / 17,03 - 1,00





Original parts names, oem numbers, symbols and descriptions used in this catalogue are for reference purposes only.

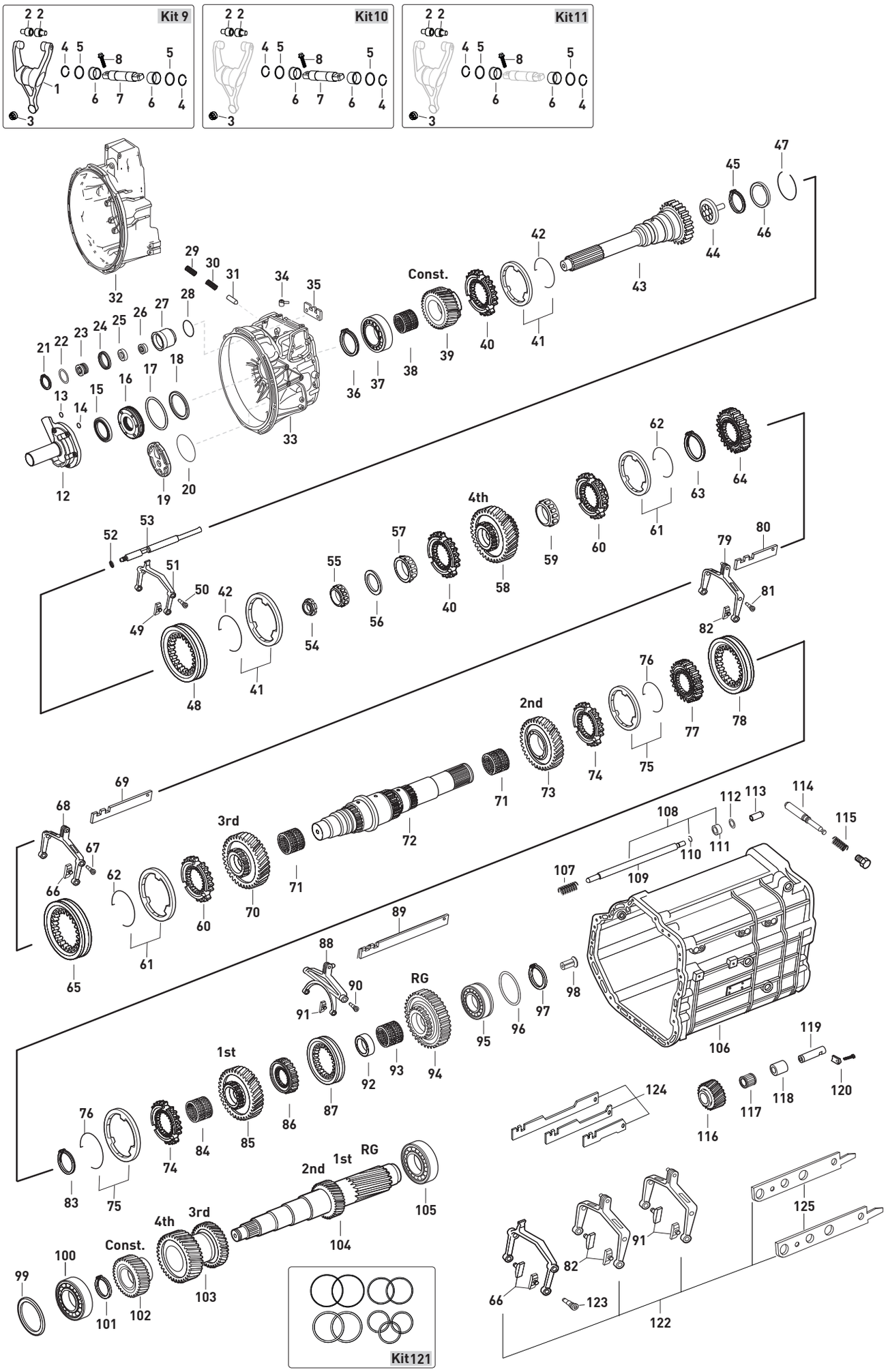






Original parts names, oem numbers, symbols and descriptions used in this catalogue are for reference purposes only.

| Fig. | Kacmaz No | Oem No | Oem Old No | Pcs. | Ürün Tanımı | Description | Sizes | Not | 715510 | 715516 | 715517 | 715513 | 715518 |
|---|---|---|---|---|---|---|---|---|---|---|---|---|---|
| 46 | K21.03513 | 001 262 0262 | (000 262 8662) | 1 | PRİZDİREK ARKA KEÇE | OIL SEAL | 73,5X101X7mm | | ♦ | ♦ | ♦ | ♦ | ♦ |
| | | | (000 262 9062) | | | | | | | | | | |
| 47 | K21.04146 | 389 262 0973 | (945 262 0073) | 1 | PRİZDİREK KEÇE SEKMANI | LOCK RING | | | ♦ | | | ♦ | |
| 48 | K21.03002 | 945 262 2823 | (945 262 0323) | 1 | TAKVİYE HALKA | ENGAGING SLEEVE | | (1) | ♦ | ♦ | ♦ | ♦ | |
| | | | (945 262 0623) | | | | | | | | | | |
| | | | (389 262 4123) | | | | | | | | | | |
| | | | (389 262 2723) | | | | | | | | | | |
| 48 | K21.03137 | 945 262 6823 | (945 262 6423) | 1 | TAKVİYE HALKA | ENGAGING SLEEVE | | (2) | ♦ | ♦ | ♦ | ♦ | ♦ |
| 49 | K21.03431 | 960 265 0049 | (947 265 0349) | 2 | TAKVİYE HİLAL PABUCU | SLIDING PAD | | | ♦ | ♦ | ♦ | ♦ | ♦ |
| | | | (389 265 2749) | | | | | | | | | | |
| 50 | K21.04307 | 960 265 0774 | (945 265 1274) | 2 | HİLAL CİVATASI | PIN | | | ♦ | ♦ | ♦ | ♦ | ♦ |
| | | | (945 265 2974) | | | | | | | | | | |
| | | | (945 265 2774) | | | | | | | | | | |
| 51 | K21.06410 | 945 265 0001 | | 1 | TAKVİYE HİLALİ | GEAR SHIFT FORK | | | ♦ | ♦ | ♦ | ♦ | ♦ |
| 52 | K21.04160 | 387 263 2652 | | 1 | TAKVİYE HİLAL MİL PULU | SPACER WASHER | 0,20mm | | ♦ | ♦ | ♦ | ♦ | ♦ |
| 52 | K21.04161 | 387 263 2752 | | 1 | TAKVİYE HİLAL MİL PULU | SPACER WASHER | 0,40mm | | ♦ | ♦ | ♦ | ♦ | ♦ |
| 52 | | 387 263 2852 | | 1 | TAKVİYE HİLAL MİL PULU | SPACER WASHER | 0,60mm | | ♦ | ♦ | ♦ | ♦ | ♦ |
| 52 | | 387 263 3052 | | 1 | TAKVİYE HİLAL MİL PULU | SPACER WASHER | 1,00mm | | ♦ | ♦ | ♦ | ♦ | ♦ |
| 53 | K21.07003 | 945 267 0017 | | 1 | TAKVİYE HİLAL MİLİ | GEAR SHIFT RAIL | | | ♦ | ♦ | ♦ | ♦ | ♦ |
| 53 | | 945 267 0217 | | 1 | TAKVİYE HİLAL MİLİ | GEAR SHIFT RAIL | | | ♦ | ♦ | ♦ | ♦ | |
| 53 | | 945 267 0617 | | 1 | TAKVİYE HİLAL MİLİ | GEAR SHIFT RAIL | | | ♦ | | | ♦ | |
| 54 | K21.03432 | 945 990 0250 | (945 990 0150) | 1 | KAMALI MİL SOMUNU | NUT | M30X1,5 | | ♦ | ♦ | ♦ | ♦ | ♦ |
| 55 | K21.03632 | 020 981 5205 | (017 981 1305) | 1 | KAMALI MİL UÇ BİLYA | ROLLER BEARING | 39,69X40,39mm | | ♦ | ♦ | ♦ | ♦ | ♦ |
| | | | (015 981 8505) | | | | | | | | | | |
| 56 | K21.04024 | 389 262 3352 | | 1 | 4.VİTES ÖN BİLYA AYAR PULU | THRUST WASHER | 2,50mm | | ♦ | ♦ | ♦ | ♦ | ♦ |
| 56 | K21.04025 | 389 262 3252 | | 1 | 4.VİTES ÖN BİLYA AYAR PULU | THRUST WASHER | 2,00mm | | ♦ | ♦ | ♦ | ♦ | ♦ |
| 56 | K21.04026 | 389 262 3152 | | 1 | 4.VİTES ÖN BİLYA AYAR PULU | THRUST WASHER | 1,95mm | | ♦ | ♦ | ♦ | ♦ | ♦ |
| 56 | K21.04027 | 389 262 3052 | | 1 | 4.VİTES ÖN BİLYA AYAR PULU | THRUST WASHER | 1,90mm | | ♦ | ♦ | ♦ | ♦ | ♦ |
| 56 | K21.04028 | 389 262 2952 | | 1 | 4.VİTES ÖN BİLYA AYAR PULU | THRUST WASHER | 1,85mm | | ♦ | ♦ | ♦ | ♦ | ♦ |
| 56 | K21.04092 | 389 262 2455 | | 1 | 4.VİTES ÖN BİLYA AYAR PULU | THRUST WASHER | 1,82mm | | ♦ | ♦ | ♦ | ♦ | ♦ |
| 56 | K21.04093 | 389 262 2355 | | 1 | 4.VİTES ÖN BİLYA AYAR PULU | THRUST WASHER | 1,79mm | | ♦ | ♦ | ♦ | ♦ | ♦ |
| 56 | K21.04094 | 389 262 2255 | | 1 | 4.VİTES ÖN BİLYA AYAR PULU | THRUST WASHER | 1,76mm | | ♦ | ♦ | ♦ | ♦ | ♦ |
| 56 | K21.04095 | 389 262 2155 | | 1 | 4.VİTES ÖN BİLYA AYAR PULU | THRUST WASHER | 1,73mm | | ♦ | ♦ | ♦ | ♦ | ♦ |
| 56 | K21.04096 | 389 262 2055 | | 1 | 4.VİTES ÖN BİLYA AYAR PULU | THRUST WASHER | 1,67mm | | ♦ | ♦ | ♦ | ♦ | ♦ |
| 56 | K21.04097 | 389 262 1955 | | 1 | 4.VİTES ÖN BİLYA AYAR PULU | THRUST WASHER | 1,64mm | | ♦ | ♦ | ♦ | ♦ | ♦ |
| 56 | K21.04098 | 389 262 1855 | | 1 | 4.VİTES ÖN BİLYA AYAR PULU | THRUST WASHER | 1,61mm | | ♦ | ♦ | ♦ | ♦ | ♦ |
| 56 | K21.04099 | 389 262 1755 | | 1 | 4.VİTES ÖN BİLYA AYAR PULU | THRUST WASHER | 1,58mm | | ♦ | ♦ | ♦ | ♦ | ♦ |
| 56 | K21.04100 | 389 262 2352 | | 1 | 4.VİTES ÖN BİLYA AYAR PULU | THRUST WASHER | 1,55mm | | ♦ | ♦ | ♦ | ♦ | ♦ |
| 56 | K21.04101 | 389 262 1655 | | 1 | 4.VİTES ÖN BİLYA AYAR PULU | THRUST WASHER | 1,52mm | | ♦ | ♦ | ♦ | ♦ | ♦ |
| 56 | K21.04102 | 389 262 1555 | | 1 | 4.VİTES ÖN BİLYA AYAR PULU | THRUST WASHER | 1,49mm | | ♦ | ♦ | ♦ | ♦ | ♦ |
| 56 | K21.04103 | 389 262 1455 | | 1 | 4.VİTES ÖN BİLYA AYAR PULU | THRUST WASHER | 1,46mm | | ♦ | ♦ | ♦ | ♦ | ♦ |
| 56 | K21.04104 | 389 262 1355 | | 1 | 4.VİTES ÖN BİLYA AYAR PULU | THRUST WASHER | 1,43mm | | ♦ | ♦ | ♦ | ♦ | ♦ |
| 56 | K21.04105 | 389 262 2052 | | 1 | 4.VİTES ÖN BİLYA AYAR PULU | THRUST WASHER | 1,40mm | | ♦ | ♦ | ♦ | ♦ | ♦ |
| 56 | K21.04106 | 389 262 1952 | | 1 | 4.VİTES ÖN BİLYA AYAR PULU | THRUST WASHER | 1,35mm | | ♦ | ♦ | ♦ | ♦ | ♦ |
| 56 | K21.04107 | 389 262 2754 | | 1 | 4.VİTES ÖN BİLYA AYAR PULU | THRUST WASHER | 1,30mm | | ♦ | ♦ | ♦ | ♦ | ♦ |
| 56 | K21.04108 | 389 262 3654 | | 1 | 4.VİTES ÖN BİLYA AYAR PULU | THRUST WASHER | 1,25mm | | ♦ | ♦ | ♦ | ♦ | ♦ |
| 56 | K21.04109 | 389 262 3554 | | 1 | 4.VİTES ÖN BİLYA AYAR PULU | THRUST WASHER | 1,20mm | | ♦ | ♦ | ♦ | ♦ | ♦ |
| 56 | K21.04110 | 389 262 3454 | | 1 | 4.VİTES ÖN BİLYA AYAR PULU | THRUST WASHER | 1,15mm | | ♦ | ♦ | ♦ | ♦ | ♦ |
| 56 | K21.04111 | 389 262 3354 | | 1 | 4.VİTES ÖN BİLYA AYAR PULU | THRUST WASHER | 1,10mm | | ♦ | ♦ | ♦ | ♦ | ♦ |
| 56 | K21.04112 | 389 262 3254 | | 1 | 4.VİTES ÖN BİLYA AYAR PULU | THRUST WASHER | 1,05mm | | ♦ | ♦ | ♦ | ♦ | ♦ |
| 56 | K21.04113 | 389 262 2854 | | 1 | 4.VİTES ÖN BİLYA AYAR PULU | THRUST WASHER | 0,50mm | | ♦ | ♦ | ♦ | ♦ | ♦ |
| 56 | K21.94113 | | | 1 | 4.VİTES ÖN BİLYA AYAR PULU | THRUST WASHER | 0,40mm | | ♦ | ♦ | ♦ | ♦ | ♦ |
| 56 | K21.84113 | | | 1 | 4.VİTES ÖN BİLYA AYAR PULU | THRUST WASHER | 0,30mm | | ♦ | ♦ | ♦ | ♦ | ♦ |
| 56 | K21.74113 | | | 1 | 4.VİTES ÖN BİLYA AYAR PULU | THRUST WASHER | 0,20mm | | ♦ | ♦ | ♦ | ♦ | ♦ |
| 56 | K21.64113 | | | 1 | 4.VİTES ÖN BİLYA AYAR PULU | THRUST WASHER | 0,10mm | | ♦ | ♦ | ♦ | ♦ | ♦ |

NOTES :
Parts encoded alphabetic and numaric are used together.

GEARBOX TYPE:
715510 - 715516 - 715517 - G211 - 16 / 17,03 - 1,00
715513 - 715518 - G231 -16 / 17,03 - 1,00

NOTLAR :
Alfabetik ve rakam ile kodlanan parçalar birlikte kullanılır.

ŞANZIMAN TİPLERİ:
715510 - 715516 - 715517 - G211 - 16 / 17,03 - 1,00
715513 - 715518 - G231 -16 / 17,03 - 1,00





Original parts names, oem numbers, symbols and descriptions used in this catalogue are for reference purposes only.

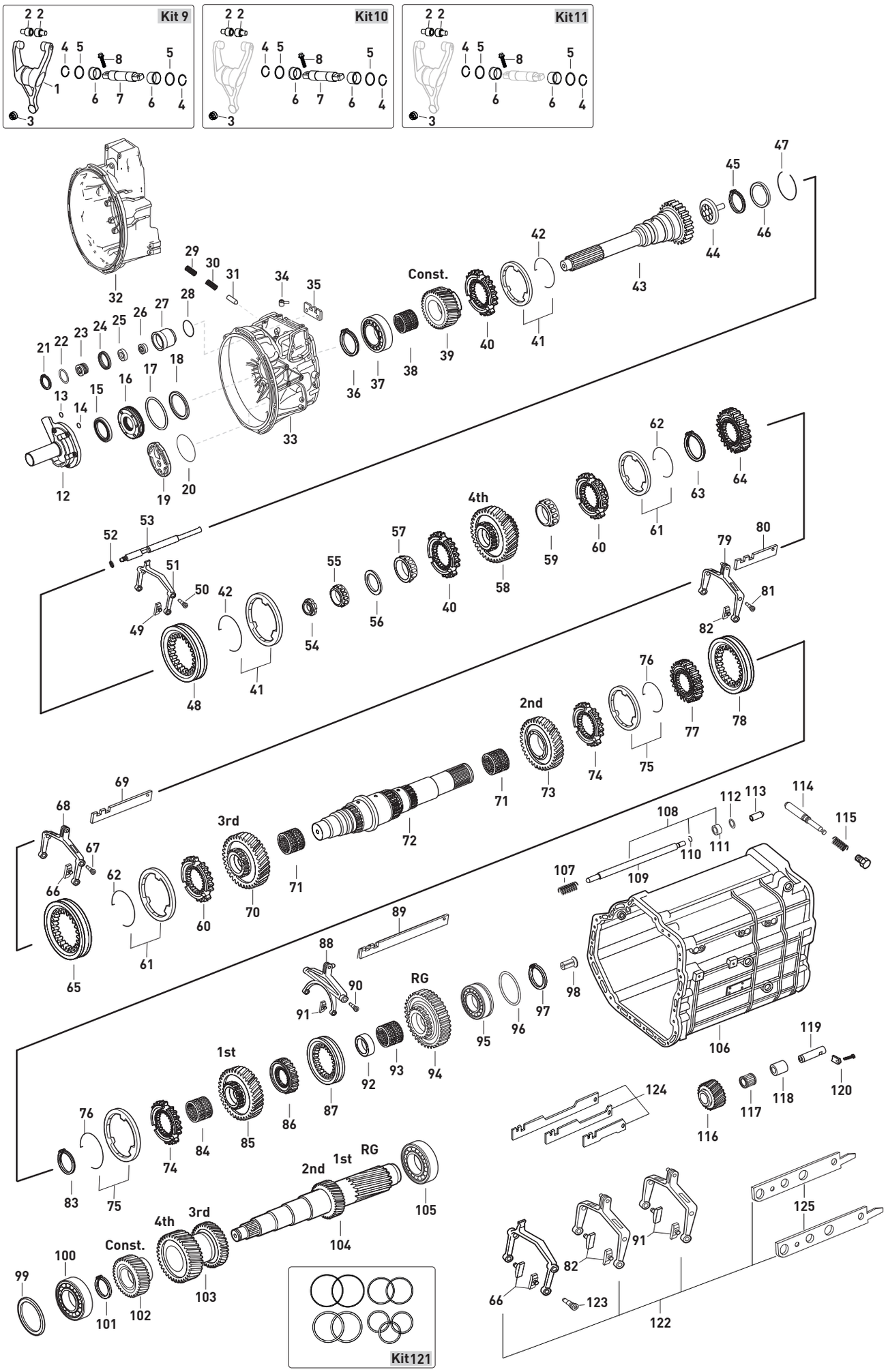






Original parts names, oem numbers, symbols and descriptions used in this catalogue are for reference purposes only.

| Fig. | Kacmaz No | Oem No | Oem Old No | Pcs. | Ürün Tanımı | Description | Sizes | Not | 715510 | 715516 | 715517 | 715513 | 715518 |
|---|---|---|---|---|---|---|---|---|---|---|---|---|---|
| 57 | K21.03629 | 015 981 7605 | (015 981 2005) | 1 | 4.VİTES DİŞLİSİ ÖN BİLYA | ROLLER BEARING | 50X41mm | | ♦ | ♦ | ♦ | ♦ | ♦ |
| | | | (011 981 4705) | | | | | | | | | | |
| | | | (011 981 5305) | | | | | | | | | | |
| 58 | K21.03026 | 945 262 8810 | (945 262 9310) | 1 | 4.VİTES DİŞLİSİ 29 DİŞ | GEAR 4th 29 T. | | | ♦ | ♦ | ♦ | ♦ | ♦ |
| | | | (945 262 9210) | | | | | | | | | | |
| | | | (945 262 9117) | | | | | | | | | | |
| | | | (945 262 0510) | | | | | | | | | | |
| 59 | K21.03631 | 015 981 7705 | (014 981 1605) | 1 | 4.VİTES DİŞLİSİ ARKA BİLYA | ROLLER BEARING | 55X23mm | | ♦ | ♦ | ♦ | ♦ | ♦ |
| 60 | K21.03027 | 945 262 0534 | (389 262 5034) | 2 | 3./4.VİTES SENKROMENÇ | ENGAGING RING | | (1) | ♦ | ♦ | ♦ | ♦ | |
| 60 | K21.03146 | 945 262 8234 | (945 262 5434) | 2 | 3./4.VİTES SENKROMENÇ | ENGAGING RING | | (2) | ♦ | ♦ | ♦ | ♦ | ♦ |
| 61 | K21.03016 | 389 262 0737 | (387 262 0937) | 2 | 3./4.VİTES FRENLEME (Mo) | SYNCHRONIZING CONE / Mo | | (1) | ♦ | ♦ | ♦ | ♦ | |
| | | | (389 262 1137) | | | | | | | | | | |
| 61 | K21.06041 | 945 260 0650 | | 2 | 3./4.VİTES FRENLEME (C) | SYNCHRONIZING CONE / C | | (1) | ♦ | ♦ | ♦ | ♦ | |
| 61 | K21.03148 | 947 260 1945 | (947 260 4645) | 2 | 3./4.VİTES FRENLEME (Mo) | SYNCHRONIZING CONE / Mo | | (2) | ♦ | ♦ | ♦ | ♦ | ♦ |
| | | | (946 262 6137) | | | | | | | | | | |
| 61 | K21.06299 | 947 260 3545 | (947 260 5145) | 2 | 3./4.VİTES FRENLEME (C) | SYNCHRONIZING CONE / C | | (2) | ♦ | ♦ | ♦ | ♦ | ♦ |
| | | | (947 260 2945) | | | | | | | | | | |
| | | | (947 260 0745) | | | | | | | | | | |
| 62 | K21.03055 | 387 262 0893 | (387 262 0793) | 2 | FRENLEME TELİ | SPRING | | | ♦ | ♦ | ♦ | ♦ | ♦ |
| 63 | K21.04343 | 387 262 2073 | | 1 | 3./4.VİTES YILDIZ DİŞLİ SEKMANI | RETAINING RING | 2,40mm | | ♦ | ♦ | ♦ | ♦ | ♦ |
| 63 | K21.06687 | 387 262 2173 | | 1 | 3./4.VİTES YILDIZ DİŞLİ SEKMANI | RETAINING RING | 2,45mm | | ♦ | ♦ | ♦ | ♦ | ♦ |
| 63 | K21.04342 | 007 994 0041 | (387 262 2273) | 1 | 3./4.VİTES YILDIZ DİŞLİ SEKMANI | RETAINING RING | 2,50mm | | ♦ | ♦ | ♦ | ♦ | ♦ |
| 63 | K21.04359 | 387 262 2373 | | 1 | 3./4.VİTES YILDIZ DİŞLİ SEKMANI | RETAINING RING | 2,55mm | | ♦ | ♦ | ♦ | ♦ | ♦ |
| 63 | K21.04345 | 387 262 2473 | | 1 | 3./4.VİTES YILDIZ DİŞLİ SEKMANI | RETAINING RING | 2,60mm | | ♦ | ♦ | ♦ | ♦ | ♦ |
| 63 | K21.07021 | 387 262 2573 | | 1 | 3./4.VİTES YILDIZ DİŞLİ SEKMANI | RETAINING RING | 2,65mm | | ♦ | ♦ | ♦ | ♦ | ♦ |
| 63 | K21.04344 | 387 262 7973 | | 1 | 3./4.VİTES YILDIZ DİŞLİ SEKMANI | RETAINING RING | 2,70mm | | ♦ | ♦ | ♦ | ♦ | ♦ |
| 63 | K21.07022 | 387 262 8073 | | 1 | 3./4.VİTES YILDIZ DİŞLİ SEKMANI | RETAINING RING | 2,75mm | | ♦ | ♦ | ♦ | ♦ | ♦ |
| 63 | K21.06588 | 387 262 8173 | | 1 | 3./4.VİTES YILDIZ DİŞLİ SEKMANI | RETAINING RING | 2,80mm | | ♦ | ♦ | ♦ | ♦ | ♦ |
| 64 | K21.03149 | 389 262 4735 | (389 262 4635) | 1 | 3./4.VİTES YILDIZ DİŞLİ | SYNCHRONIZER HUB | | | ♦ | ♦ | ♦ | ♦ | ♦ |
| 65 | K21.03009 | 945 262 2723 | (945 262 0423) | 1 | 3./4.VİTES HALKA | ENGAGING SLEEVE | | (1) | ♦ | ♦ | ♦ | ♦ | |
| | | | (389 262 2623) | | | | | | | | | | |
| 65 | K21.03151 | 945 262 6523 | (930 262 0523) | 1 | 3./4.VİTES HALKA | ENGAGING SLEEVE | | (2) | ♦ | ♦ | ♦ | ♦ | ♦ |
| 66 | K21.03431 | 960 265 0049 | (947 265 0349) | 2 | 3./4.VİTES HİLAL PABUCU | SLIDING PAD | | | ♦ | ♦ | ♦ | ♦ | ♦ |
| | | | (389 265 2749) | | | | | | | | | | |
| 67 | K21.04307 | 960 265 0774 | (945 265 1274) | 2 | HİLAL CİVATASI | PIN | | | ♦ | ♦ | ♦ | ♦ | |
| | | | (945 265 2974) | | | | | | | | | | |
| | | | (945 265 2774) | | | | | | | | | | |
| 68 | K21.06405 | 945 260 1030 | (945 265 0802) | 1 | 3./4.VİTES HİLALİ | SHIFTING FORK 3rd/4th | | | ♦ | ♦ | ♦ | ♦ | |
| 68 | | 945 260 3730 | (945 260 2630) | 1 | 3./4.VİTES HİLALİ | SHIFTING FORK 3rd/4th | | | ♦ | | | ♦ | |
| | | | (945 265 2102) | | | | | | | | | | |
| 68 | K21.07008 | 960 265 1002 | | 1 | 3./4.VİTES HİLALİ | SHIFTING FORK 3rd/4th | | | | | | | ♦ |
| 69 | | 945 265 0404 | | 1 | 3./4.VİTES HİLAL ÇITASI | SHIFTING ROD 3rd/4th | | | ♦ | ♦ | ♦ | ♦ | |
| 69 | | 960 265 0604 | | 1 | 3./4.VİTES HİLAL ÇITASI | SHIFTING ROD 3rd/4th | | | | | | | ♦ |
| 70 | K21.03152 | 945 262 3513 | (945 262 3413) | 1 | 3.VİTES DİŞLİSİ 34 DİŞ | GEAR 3rd 34 T. | | | ♦ | ♦ | ♦ | ♦ | ♦ |
| | | | (930 262 0713) | | | | | | | | | | |
| 71 | K21.03810 | 018 981 6610 | (010 981 5310) | 2 | 2./3.VİTES MASURA BİLYA | NEEDLE CAGE | 85X93X53mm | | ♦ | ♦ | ♦ | ♦ | ♦ |
| 72 | K21.03156 | 945 262 4505 | | 1 | KAMALI MİL | MAIN SHAFT | | (3) | ♦ | ♦ | ♦ | ♦ | |
| 72 | K21.03029 | 945 262 3605 | (945 262 3505) | 1 | KAMALI MİL | MAIN SHAFT | | (4) | ♦ | ♦ | ♦ | ♦ | |
| 72 | K21.06042 | 930 262 1205 | (930 262 2405) | 1 | KAMALI MİL | MAIN SHAFT | | (5) | ♦ | ♦ | ♦ | ♦ | |
| 72 | K21.06503 | 960 262 0205 | | 1 | KAMALI MİL | MAIN SHAFT | | (6) | | | | | ♦ |
| 73 | K21.03158 | 389 262 2812 | (389 262 2512) | 1 | 2.VİTES DİŞLİSİ 39 DİŞ | GEAR 2nd 39 T. | | | ♦ | ♦ | ♦ | ♦ | ♦ |
| | | | (389 262 3712) | | | | | | | | | | |
| | | | (945 262 3112) | | | | | | | | | | |
| 74 | K21.03025 | 945 262 0434 | (389 262 0034) | 2 | 1./2.VİTES SENKROMENÇ | ENGAGING RING | | (1) | ♦ | ♦ | ♦ | ♦ | |
| 74 | K21.03160 | 945 262 5534 | | 2 | 1./2.VİTES SENKROMENÇ | ENGAGING RING | | (2) | ♦ | ♦ | ♦ | ♦ | ♦ |

NOTES :
Parts encoded alphabetic and numaric are used together.

GEARBOX TYPE:
715510 - 715516 - 715517 - G211 - 16 / 17,03 - 1,00
715513 - 715518 - G231 -16 / 17,03 - 1,00

NOTLAR :
Alfabetik ve rakam ile kodlanan parçalar birlikte kullanılır.

ŞANZIMAN TİPLERİ:
715510 - 715516 - 715517 - G211 - 16 / 17,03 - 1,00
715513 - 715518 - G231 -16 / 17,03 - 1,00





Original parts names, oem numbers, symbols and descriptions used in this catalogue are for reference purposes only.

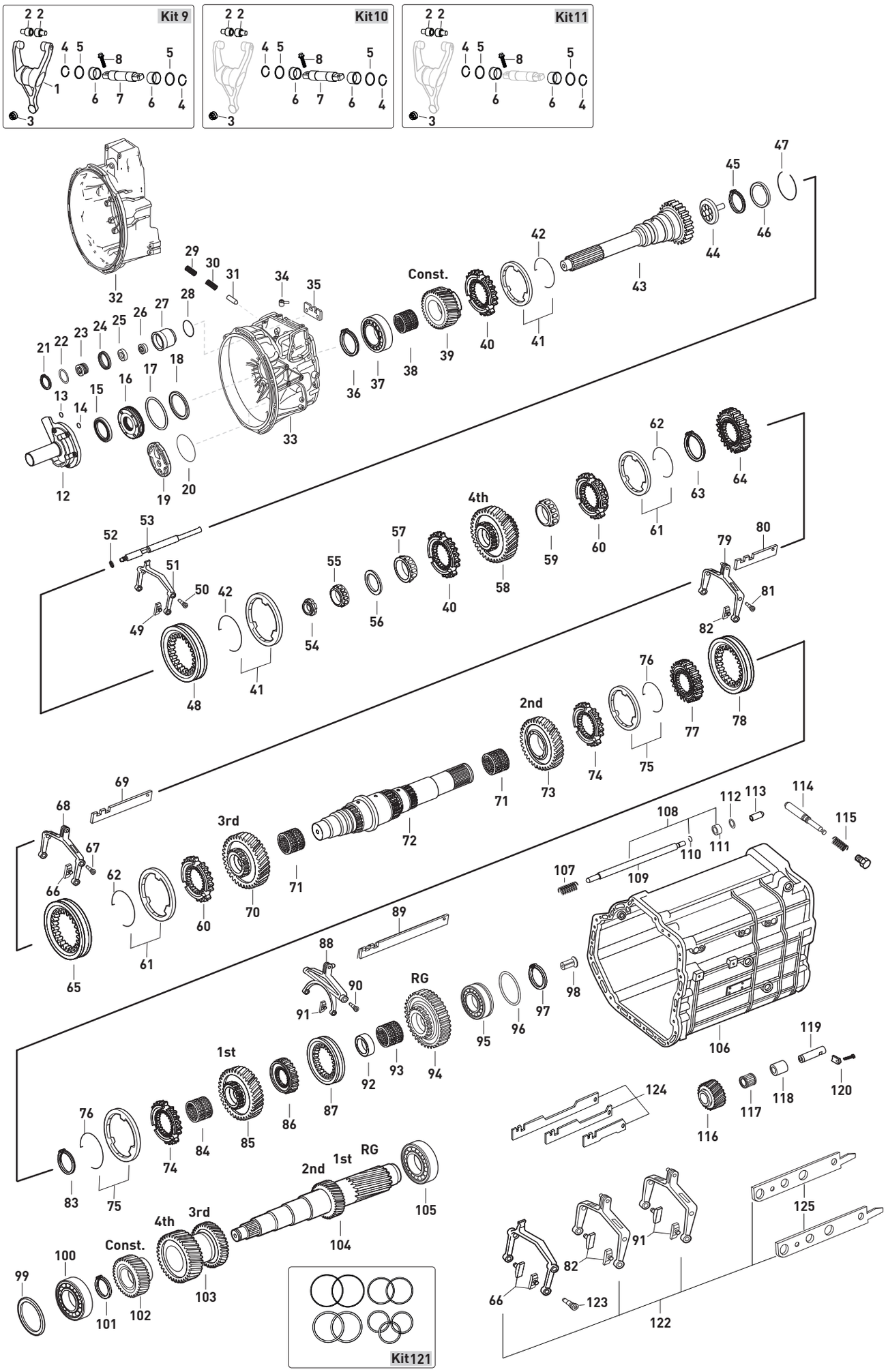






Original parts names, oem numbers, symbols and descriptions used in this catalogue are for reference purposes only.

| Fig. | Kacmaz No | Oem No | Oem Old No | Pcs. | Ürün Tanımı | Description | Sizes | Not | 715510 | 715516 | 715517 | 715513 | 715518 |
|---|---|---|---|---|---|---|---|---|---|---|---|---|---|
| 75 | K21.03016 | 389 262 0737 | (387 262 0937) | 2 | 1./2.VİTES FRENLEME (Mo) | SYNCHRONIZING CONE / Mo | | (1) | ♦ | ♦ | ♦ | ♦ | |
| | | | (389 262 1137) | | | | | | | | | | |
| 75 | K21.06041 | 945 260 0650 | | 2 | 1./2.VİTES FRENLEME (C) | SYNCHRONIZING CONE / C | | (1) | ♦ | ♦ | ♦ | ♦ | |
| 75 | K21.03148 | 947 260 1945 | (947 260 4645) | 2 | 1./2.VİTES FRENLEME (Mo) | SYNCHRONIZING CONE / Mo | | (2) | ♦ | ♦ | ♦ | ♦ | ♦ |
| | | | (946 262 6137) | | | | | | | | | | |
| 75 | K21.06299 | 947 260 3545 | (947 260 5145) | 2 | 1./2.VİTES FRENLEME (C) | SYNCHRONIZING CONE / C | | (2) | ♦ | ♦ | ♦ | ♦ | ♦ |
| | | | (947 260 2945) | | | | | | | | | | |
| | | | (947 260 0745) | | | | | | | | | | |
| 76 | K21.03055 | 387 262 0893 | (387 262 0793) | 2 | FRENLEME TELİ | SPRING | | | ♦ | ♦ | ♦ | ♦ | ♦ |
| 77 | K21.03161 | 389 262 2535 | (945 262 0135) | 1 | 1./2.VİTES YILDIZ DİŞLİ | SYNCHRONIZER HUB | | | ♦ | ♦ | ♦ | ♦ | ♦ |
| 78 | K21.03009 | 945 262 2723 | (945 262 0423) | 1 | 1./2.VİTES HALKA | ENGAGING SLEEVE | | (1) | ♦ | ♦ | ♦ | ♦ | |
| | | | (389 262 2623) | | | | | | | | | | |
| 78 | K21.03151 | 945 262 6523 | (930 262 0523) | 1 | 1./2.VİTES HALKA | ENGAGING SLEEVE | | (2) | ♦ | ♦ | ♦ | ♦ | ♦ |
| 79 | K21.06258 | 945 260 0230 | (945 260 0330) | 1 | 1./2.VİTES HİLALİ | SHIFTING FORK 1st/2nd | | | ♦ | ♦ | ♦ | ♦ | ♦ |
| | | | (945 265 0301) | | | | | | | | | | |
| 79 | | 945 260 3630 | (945 260 3030) | 1 | 1./2.VİTES HİLALİ | SHIFTING FORK 1st/2nd | | | ♦ | | | ♦ | |
| 80 | | 945 265 1904 | | 1 | 1./2.VİTES HİLAL ÇITASI | SHIFTING ROD 1st/2nd | | | ♦ | | | ♦ | |
| 80 | K21.06702 | 945 265 2704 | (945 265 0304) | 1 | 1./2.VİTES HİLAL ÇITASI | SHIFTING ROD 1st/2nd | | | ♦ | ♦ | ♦ | ♦ | |
| | | | (945 265 1304) | | | | | | | | | | |
| | | | (945 265 1204) | | | | | | | | | | |
| 80 | | 960 265 1004 | | 1 | 1./2.VİTES HİLAL ÇITASI | SHIFTING ROD 1st/2nd | | | | | | | ♦ |
| 81 | K21.04307 | 960 265 0774 | (945 265 1274) | 2 | HİLAL CİVATASI | PIN | | | ♦ | ♦ | ♦ | ♦ | |
| | | | (945 265 2974) | | | | | | | | | | |
| | | | (945 265 2774) | | | | | | | | | | |
| 82 | K21.03431 | 960 265 0049 | (947 265 0349) | 2 | 1./2.VİTES HİLAL PABUCU | SLIDING PAD | | | ♦ | ♦ | ♦ | ♦ | ♦ |
| | | | (389 265 2749) | | | | | | | | | | |
| 83 | K21.04343 | 387 262 2073 | | 1 | 1./2.VİTES YILDIZ DİŞLİ SEKMANI | RETAINING RING | 2,40mm | | ♦ | ♦ | ♦ | ♦ | ♦ |
| 83 | K21.06687 | 387 262 2173 | | 1 | 1./2.VİTES YILDIZ DİŞLİ SEKMANI | RETAINING RING | 2,45mm | | ♦ | ♦ | ♦ | ♦ | ♦ |
| 83 | K21.04342 | 007 994 0041 | (387 262 2273) | 1 | 1./2.VİTES YILDIZ DİŞLİ SEKMANI | RETAINING RING | 2,50mm | | ♦ | ♦ | ♦ | ♦ | ♦ |
| 83 | K21.04359 | 387 262 2373 | | 1 | 1./2.VİTES YILDIZ DİŞLİ SEKMANI | RETAINING RING | 2,55mm | | ♦ | ♦ | ♦ | ♦ | ♦ |
| 83 | K21.04345 | 387 262 2473 | | 1 | 1./2.VİTES YILDIZ DİŞLİ SEKMANI | RETAINING RING | 2,60mm | | ♦ | ♦ | ♦ | ♦ | ♦ |
| 83 | K21.07021 | 387 262 2573 | | 1 | 1./2.VİTES YILDIZ DİŞLİ SEKMANI | RETAINING RING | 2,65mm | | ♦ | ♦ | ♦ | ♦ | ♦ |
| 83 | K21.04344 | 387 262 7973 | | 1 | 1./2.VİTES YILDIZ DİŞLİ SEKMANI | RETAINING RING | 2,70mm | | ♦ | ♦ | ♦ | ♦ | ♦ |
| 83 | K21.07022 | 387 262 8073 | | 1 | 1./2.VİTES YILDIZ DİŞLİ SEKMANI | RETAINING RING | 2,75mm | | ♦ | ♦ | ♦ | ♦ | ♦ |
| 83 | K21.06588 | 387 262 8173 | | 1 | 1./2.VİTES YILDIZ DİŞLİ SEKMANI | RETAINING RING | 2,80mm | | ♦ | ♦ | ♦ | ♦ | ♦ |
| 84 | K21.03839 | 945 981 0010 | (018 981 8110) | 1 | 1.VİTES MASURA BİLYA | NEEDLE CAGE | 75X83X48mm | (3)(5)(6) | ♦ | ♦ | ♦ | ♦ | ♦ |
| | | | (018 981 7610) | | | | | | | | | | |
| 84 | K21.03817 | 019 981 4410 | (007 981 4210) | 1 | 1.VİTES MASURA BİLYA | NEEDLE CAGE | 75X83X55mm | (4) | ♦ | ♦ | ♦ | ♦ | |
| | | | (008 981 8310) | | | | | | | | | | |
| | | | (009 981 0010) | | | | | | | | | | |
| 85 | K21.03162 | 946 262 0811 | (389 262 2711) | 1 | 1.VİTES DİŞLİSİ 44 DİŞ | GEAR 1st 44 T. | | | ♦ | ♦ | ♦ | ♦ | ♦ |
| | | | (946 262 0911) | | | | | | | | | | |
| | | | (945 262 3111) | | | | | | | | | | |
| | | | (389 262 2011) | | | | | | | | | | |
| | | | (945 262 0811) | | | | | | | | | | |
| 86 | K21.06995 | 945 262 3935 | | 1 | GERİ VİTES YILDIZ DİŞLİ | SYNCHRONIZER HUB | | (D) | ♦ | | | ♦ | |
| 86 | K21.03163 | 945 262 3835 | | 1 | GERİ VİTES YILDIZ DİŞLİ | SYNCHRONIZER HUB | | (F) | ♦ | | | ♦ | |
| 86 | K21.03059 | 389 262 0135 | | 1 | GERİ VİTES YILDIZ DİŞLİ | SYNCHRONIZER HUB | | (C)(E) | ♦ | ♦ | ♦ | ♦ | ♦ |
| 86 | K21.03164 | 389 262 3935 | | 1 | GERİ VİTES YILDIZ DİŞLİ | SYNCHRONIZER HUB | | (G) | ♦ | | | ♦ | |
| 87 | K21.03060 | 389 262 1723 | (389 262 0023) | 1 | GERİ VİTES HALKASI | ENGAGING SLEEVE | | (C)(E) | ♦ | ♦ | ♦ | ♦ | ♦ |
| 87 | K21.03061 | 389 262 1823 | (389 262 0923) | 1 | GERİ VİTES HALKASI | ENGAGING SLEEVE | | (D)(F)(G) | ♦ | | | ♦ | |
| 88 | K21.06259 | 945 260 0430 | (945 265 0003) | 1 | GERİ VİTES HİLALİ | SHIFTING FORK RG | | | ♦ | ♦ | ♦ | ♦ | ♦ |
| 88 | K21.06699 | 960 265 0403 | | 1 | GERİ VİTES HİLALİ | SHIFTING FORK | | | | | | | ♦ |
| 89 | | 945 265 1004 | | 1 | GERİ VİTES HİLAL ÇITASI | SHIFTING ROD | | | ♦ | ♦ | ♦ | ♦ | |
| 89 | | 945 265 1104 | (945 265 0204) | 1 | GERİ VİTES HİLAL ÇITASI | SHIFTING ROD | | | ♦ | | | ♦ | |

NOTES :
Parts encoded alphabetic and numaric are used together.

GEARBOX TYPE:
715510 - 715516 - 715517 - G211 - 16 / 17,03 - 1,00
715513 - 715518 - G231 -16 / 17,03 - 1,00

NOTLAR :
Alfabetik ve rakam ile kodlanan parçalar birlikte kullanılır.

ŞANZIMAN TİPLERİ:
715510 - 715516 - 715517 - G211 - 16 / 17,03 - 1,00
715513 - 715518 - G231 -16 / 17,03 - 1,00





Original parts names, oem numbers, symbols and descriptions used in this catalogue are for reference purposes only.

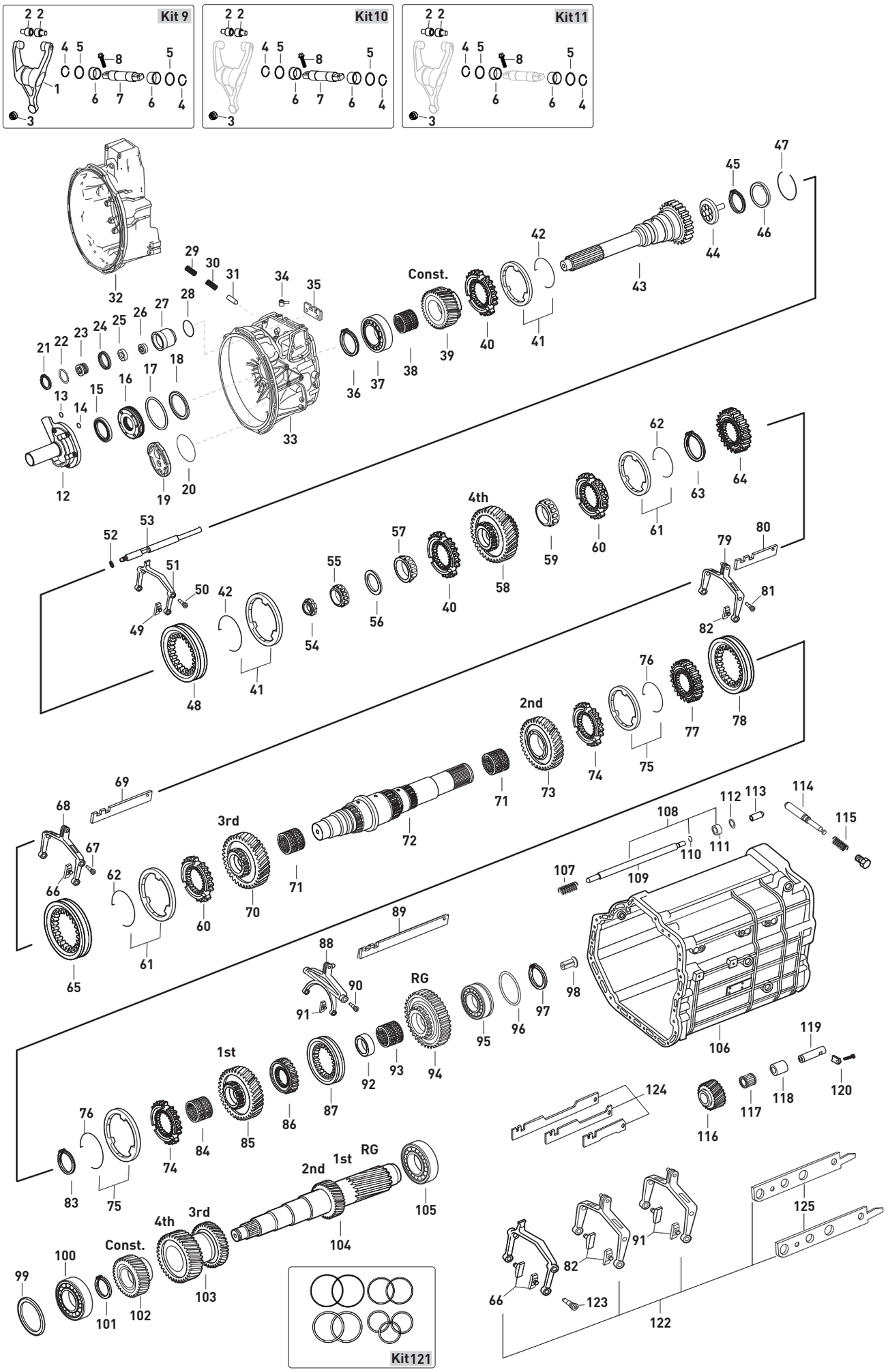






Original parts names, oem numbers, symbols and descriptions used in this catalogue are for reference purposes only.

| Fig. | Kacmaz No | Oem No | Oem Old No | Pcs. | Ürün Tanımı | Description | Sizes | Not | 715510 | 715516 | 715517 | 715513 | 715518 |
|---|---|---|---|---|---|---|---|---|---|---|---|---|---|
| 89 | | 960 265 2704 | | 1 | GERİ VİTES HİLAL ÇITASI | SHIFTING ROD | | | | | | | ♦ |
| 90 | K21.04307 | 960 265 0774 | (945 265 1274) | 2 | HİLAL CİVATASI | PIN | | | ♦ | ♦ | ♦ | ♦ | |
| | | | (945 265 2974) | | | | | | | | | | |
| | | | (945 265 2774) | | | | | | | | | | |
| 91 | K21.03410 | 947 265 0249 | (945 265 0149) | 2 | GERİ VİTES HİLAL PABUCU | SLIDING PAD | | | ♦ | ♦ | ♦ | ♦ | ♦ |
| 92 | K21.03065 | 389 262 0150 | | 1 | GERİ VİTES MASURA BİLYA ÇANAĞI | BEARING RACE | | (C)(D)(5)(6) | ♦ | ♦ | ♦ | ♦ | ♦ |
| 92 | K21.03112 | 389 262 2550 | (389 262 1650) | 1 | GERİ VİTES MASURA BİLYA ÇANAĞI | BEARING RACE | | (E)(F)(G) (3)(4) | ♦ | ♦ | ♦ | ♦ | |
| | | | (389 262 0050) | | | | | | | | | | |
| 93 | K21.03813 | 013 981 1810 | (013 981 2610) | 1 | GERİ VİTES MASURA BİLYA | NEEDLE CAGE | 78X86X33mm | (C)(D)(5)(6) | ♦ | ♦ | ♦ | ♦ | ♦ |
| | | | (013 981 1710) | | | | | | | | | | |
| 93 | K21.03803 | 009 981 1510 | (017 981 7810) | 1 | GERİ VİTES MASURA BİLYA | NEEDLE CAGE | 78X86X35mm | (E)(F)(G) (3)(4) | ♦ | ♦ | ♦ | ♦ | |
| | | | (008 981 9310) | | | | | | | | | | |
| | | | (012 981 9110) | | | | | | | | | | |
| 94 | K21.06045 | 930 262 0233 | | 1 | GERİ VİTES DİŞLİSİ 40 DİŞ | REVERSE GEAR 40 T. | | (C)(5)(6) | ♦ | ♦ | ♦ | | ♦ |
| 94 | K21.06044 | 960 262 0033 | | 1 | GERİ VİTES DİŞLİSİ 40 DİŞ | REVERSE GEAR 40 T. | | (D)(5)(6) | ♦ | | | ♦ | |
| 94 | K21.03165 | 945 262 3233 | (389 262 2033) | 1 | GERİ VİTES DİŞLİSİ 40 DİŞ | REVERSE GEAR 40 T. | | (E)(3)(4) | ♦ | ♦ | ♦ | ♦ | |
| 94 | K21.03167 | 945 262 4433 | | 1 | GERİ VİTES DİŞLİSİ 40 DİŞ | REVERSE GEAR 40 T. | | (F)(3)(4) | ♦ | | | ♦ | |
| 94 | K21.03168 | 945 262 3333 | (389 262 2133) | 1 | GERİ VİTES DİŞLİSİ 40 DİŞ | REVERSE GEAR 40 T. | | (G)(3)(4) | ♦ | | | ♦ | |
| 95 | K21.03661 | 002 981 8181 | | 1 | KAMALI MİL ARKA BİLYA | ROLLER BEARING | 60X130X35,2mm | (C)(D)(5)(6) | ♦ | ♦ | ♦ | | ♦ |
| 95 | K21.03623 | 014 981 6105 | (016 981 1305) | 1 | KAMALI MİL ARKA BİLYA | ROLLER BEARING | 60X130X33,2mm | (E)(F)(G) (3)(4) | ♦ | ♦ | ♦ | ♦ | |
| | | | (014 981 7505) | | | | | | | | | | |
| 96 | K21.04182 | 389 262 3552 | | 1 | KAMALI MİL ARKA BİLYA RAYNELİ | THRUST WASHER | 0,10mm | | ♦ | ♦ | ♦ | ♦ | ♦ |
| 96 | K21.04184 | 389 262 3652 | | 1 | KAMALI MİL ARKA BİLYA RAYNELİ | THRUST WASHER | 0,15mm | | ♦ | ♦ | ♦ | ♦ | ♦ |
| 96 | K21.04152 | 389 262 3752 | | 1 | KAMALI MİL ARKA BİLYA RAYNELİ | THRUST WASHER | 0,20mm | | ♦ | ♦ | ♦ | ♦ | ♦ |
| 96 | K21.94152 | | | 1 | KAMALI MİL ARKA BİLYA RAYNELİ | THRUST WASHER | 0,30mm | | ♦ | ♦ | ♦ | ♦ | ♦ |
| 96 | K21.04183 | 389 262 3852 | | 1 | KAMALI MİL ARKA BİLYA RAYNELİ | THRUST WASHER | 0,40mm | | ♦ | ♦ | ♦ | ♦ | ♦ |
| 96 | K21.94183 | | | 1 | KAMALI MİL ARKA BİLYA RAYNELİ | THRUST WASHER | 0,50mm | | ♦ | ♦ | ♦ | ♦ | ♦ |
| 96 | K21.84183 | | | 1 | KAMALI MİL ARKA BİLYA RAYNELİ | THRUST WASHER | 0,60mm | | ♦ | ♦ | ♦ | ♦ | ♦ |
| 96 | K21.74183 | | | 1 | KAMALI MİL ARKA BİLYA RAYNELİ | THRUST WASHER | 0,70mm | | ♦ | ♦ | ♦ | ♦ | ♦ |
| 96 | K21.04185 | 389 262 3952 | | 1 | KAMALI MİL ARKA BİLYA RAYNELİ | THRUST WASHER | 0,80mm | | ♦ | ♦ | ♦ | ♦ | ♦ |
| 96 | K21.06718 | 010 990 8382 | | 1 | KAMALI MİL ARKA BİLYA RAYNELİ | THRUST WASHER | 1,00mm | | ♦ | ♦ | ♦ | ♦ | ♦ |
| 97 | K21.04331 | 007 994 1841 | (006 994 9941) | 1 | KAMALI MİL ARKA BİLYA SEKMANI | RETAINING RING | 2,50mm | | ♦ | ♦ | ♦ | ♦ | ♦ |
| 98 | K21.04364 | 001 990 2759 | | 1 | KAMALI MİL YAĞ BORUSU | OIL PIPE | | (5)(6) | ♦ | ♦ | ♦ | ♦ | ♦ |
| 99 | K21.04192 | 406 337 0252 | | 1 | GRUP MİLİ ÖN BİLYA RAYNELİ | THRUST WASHER | 0,10mm | | ♦ | ♦ | ♦ | ♦ | ♦ |
| 99 | K21.04150 | 406 337 0352 | | 1 | GRUP MİLİ ÖN BİLYA RAYNELİ | THRUST WASHER | 0,20mm | | ♦ | ♦ | ♦ | ♦ | ♦ |
| 99 | K21.94150 | | | 1 | GRUP MİLİ ÖN BİLYA RAYNELİ | THRUST WASHER | 0,25mm | | ♦ | ♦ | ♦ | ♦ | ♦ |
| 99 | K21.04338 | 406 337 0452 | | 1 | GRUP MİLİ ÖN BİLYA RAYNELİ | THRUST WASHER | 0,30mm | | ♦ | ♦ | ♦ | ♦ | ♦ |
| 99 | K21.04196 | 389 263 5352 | (389 263 3252) | 1 | GRUP MİLİ ÖN BİLYA RAYNELİ | THRUST WASHER | 0,40mm | | ♦ | ♦ | ♦ | ♦ | ♦ |
| 99 | K21.04194 | 389 263 3352 | | 1 | GRUP MİLİ ÖN BİLYA RAYNELİ | THRUST WASHER | 0,45mm | | ♦ | ♦ | ♦ | ♦ | ♦ |
| 99 | K21.06719 | 389 263 5652 | | 1 | GRUP MİLİ ÖN BİLYA RAYNELİ | THRUST WASHER | 0,49mm | | ♦ | ♦ | ♦ | ♦ | ♦ |
| 99 | K21.04197 | 389 263 5852 | (389 263 3552) | 1 | GRUP MİLİ ÖN BİLYA RAYNELİ | THRUST WASHER | 0,55mm | | ♦ | ♦ | ♦ | ♦ | ♦ |
| 99 | K21.04340 | 389 263 6052 | | 1 | GRUP MİLİ ÖN BİLYA RAYNELİ | THRUST WASHER | 0,61mm | | ♦ | ♦ | ♦ | ♦ | ♦ |
| 99 | K21.04198 | 389 263 6352 | (389 263 3852) | 1 | GRUP MİLİ ÖN BİLYA RAYNELİ | THRUST WASHER | 0,70mm | | ♦ | ♦ | ♦ | ♦ | ♦ |
| 99 | K21.04154 | 389 263 3952 | | 1 | GRUP MİLİ ÖN BİLYA RAYNELİ | THRUST WASHER | 0,75mm | | ♦ | ♦ | ♦ | ♦ | ♦ |
| 99 | K21.04199 | 389 263 6852 | | 1 | GRUP MİLİ ÖN BİLYA RAYNELİ | THRUST WASHER | 0,85mm | | ♦ | ♦ | ♦ | ♦ | ♦ |
| 99 | K21.04200 | 389 263 7352 | | 1 | GRUP MİLİ ÖN BİLYA RAYNELİ | THRUST WASHER | 1,00mm | | ♦ | ♦ | ♦ | ♦ | ♦ |
| 99 | K21.04201 | 389 263 7852 | | 1 | GRUP MİLİ ÖN BİLYA RAYNELİ | THRUST WASHER | 1,15mm | | ♦ | ♦ | ♦ | ♦ | ♦ |
| 99 | K21.04202 | 389 263 8352 | | 1 | GRUP MİLİ ÖN BİLYA RAYNELİ | THRUST WASHER | 1,30mm | | ♦ | ♦ | ♦ | ♦ | ♦ |
| 100 | K21.03606 | 015 981 9005 | (014 981 1405) | 1 | GRUP MİLİ ÖN BİLYA | ROLLER BEARING | 50,8X100X35mm | | ♦ | ♦ | ♦ | ♦ | ♦ |
| | | | (012 981 7405) | | | | | | | | | | |
| | | | (012 981 5105) | | | | | | | | | | |
| | | | (013 981 0605) | | | | | | | | | | |
| | | | (012 981 7205) | | | | | | | | | | |
| 101 | K21.06425 | 389 994 0041 | | 1 | GRUP MİLİ ÖN BİLYA SEKMANI | RETAINING RING | 2,50mm | | ♦ | ♦ | ♦ | ♦ | ♦ |
| 102 | K21.03036 | 945 263 1110 | (945 263 0210) | 1 | TAKVİYE DİŞLİ KARŞILIĞI 31 DİŞ | CONSTANT GEAR 31 T. | | | ♦ | ♦ | ♦ | ♦ | ♦ |

NOTES :
Parts encoded alphabetic and numaric are used together.

GEARBOX TYPE:
715510 - 715516 - 715517 - G211 - 16 / 17,03 - 1,00
715513 - 715518 - G231 -16 / 17,03 - 1,00

NOTLAR :
Alfabetik ve rakam ile kodlanan parçalar birlikte kullanılır.

ŞANZIMAN TİPLERİ:
715510 - 715516 - 715517 - G211 - 16 / 17,03 - 1,00
715513 - 715518 - G231 -16 / 17,03 - 1,00





Original parts names, oem numbers, symbols and descriptions used in this catalogue are for reference purposes only.

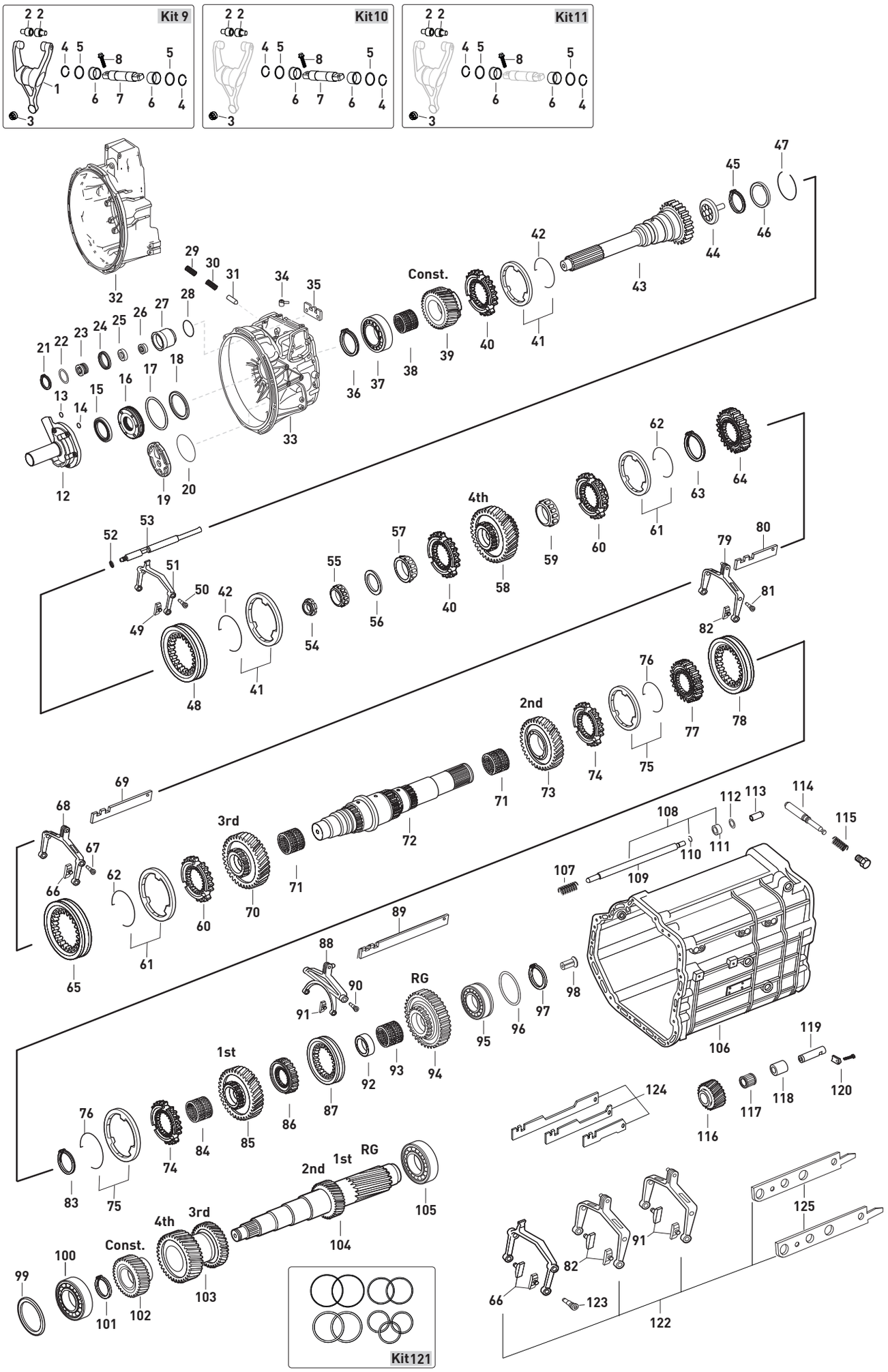






Original parts names, oem numbers, symbols and descriptions used in this catalogue are for reference purposes only.

| Fig. | Kacmaz No | Oem No | Oem Old No | Pcs. | Ürün Tanımı | Description | Sizes | Not | 715510 | 715516 | 715517 | 715513 | 715518 |
|---|---|---|---|---|---|---|---|---|---|---|---|---|---|
| 103 | K21.03171 | 945 263 2913 | (945 263 0213) | 1 | 3./4.VİTES DİŞLİ KARŞILIĞI 27/34 DİŞ | DOUBLE GEAR 3rd/4th 27/34 T. | | | ♦ | ♦ | ♦ | ♦ | ♦ |
| | | | (945 263 1013) | | | | | | | | | | |
| | | | (945 263 0513) | | | | | | | | | | |
| | | | (945 263 1413) | | | | | | | | | | |
| | | | (945 263 1513) | | | | | | | | | | |
| | | | (945 263 7113) | | | | | | | | | | |
| | | | (945 263 7013) | | | | | | | | | | |
| | | | (945 263 6913) | | | | | | | | | | |
| 104 | K21.03175 | 945 263 2902 | (945 263 0902) | 1 | GRUP MİLİ 16/21 DİŞ | COUNTER SHAFT 16/21 T. | | | ♦ | ♦ | ♦ | ♦ | ♦ |
| | | | (389 263 3102) | | | | | | | | | | |
| | | | (389 263 2502) | | | | | | | | | | |
| | | | (389 263 1602) | | | | | | | | | | |
| | | | (389 263 1302) | | | | | | | | | | |
| 105 | K21.03624 | 016 981 1205 | (012 981 9405) | 1 | GRUP MİLİ ARKA BİLYA | ROLLER BEARING | 60X130X33,8mm | | ♦ | ♦ | ♦ | ♦ | ♦ |
| | | | (012 981 9205) | | | | | | | | | | |
| 106 | | 930 260 2511 | (945 260 9911) | 1 | ŞANZIMAN ORTA GÖVDE | HOUSING | | | ♦ | ♦ | ♦ | ♦ | |
| 106 | | 960 261 2929 | | 1 | ŞANZIMAN ORTA GÖVDE | HOUSING | | | | | | | ♦ |
| 107 | | 389 993 0501 | | 1 | KİLİTLEME MİL YAYI | SPRING | | | ♦ | ♦ | | | |
| 108 | | 960 260 0633 | | Kit | KİLİTLEME MİL TAKIMI | REPAIR KIT | | | | ♦ | | | |
| 109 | K21.06046 | 945 268 0225 | | 1 | KİLİTLEME MİLİ | SHIFTING ROD | | | | | | | ♦ |
| 110 | | 007993 012200 | | 1 | KİLİTLEME MİLİ SEKMANI | RETAINING RING | | | ♦ | ♦ | ♦ | ♦ | ♦ |
| 111 | | 389 268 0051 | | 1 | KİLİTLEME MİL BURCU | SPACER RING | | | ♦ | ♦ | ♦ | ♦ | ♦ |
| 112 | | 000998 006019 | | 1 | KİLİTLEME MİLİ AYAR RAYNELİ | FITTED WASHER | 0,10mm | | ♦ | ♦ | ♦ | ♦ | ♦ |
| 112 | | 000998 006020 | | 1 | KİLİTLEME MİLİ AYAR RAYNELİ | FITTED WASHER | 0,20mm | | ♦ | ♦ | ♦ | ♦ | ♦ |
| 112 | | 000988 006021 | | 1 | KİLİTLEME MİLİ AYAR RAYNELİ | FITTED WASHER | 0,30mm | | ♦ | ♦ | ♦ | ♦ | ♦ |
| 112 | | 000988 006013 | | 1 | KİLİTLEME MİLİ AYAR RAYNELİ | FITTED WASHER | 0,50mm | | ♦ | ♦ | ♦ | ♦ | ♦ |
| 112 | | 000988 006001 | | 1 | KİLİTLEME MİLİ AYAR RAYNELİ | FITTED WASHER | 1,00mm | | ♦ | ♦ | ♦ | ♦ | ♦ |
| 113 | K21.03489 | 389 268 0674 | | 1 | KİLİTLEME MİL FİŞEĞİ | PIN | | | ♦ | ♦ | ♦ | ♦ | ♦ |
| 114 | K21.03486 | 389 267 0974 | | 1 | AĞIR SERİ KİLİTLEME MİLİ | PIN | | MPS | ♦ | ♦ | ♦ | ♦ | ♦ |
| 114 | K21.06004 | 945 267 0274 | (389 267 0274) | 1 | AĞIR SERİ KİLİTLEME MİLİ | PIN | | EPS | ♦ | | | | ♦ |
| 115 | K21.06006 | 389 993 3401 | (389 993 0601) | 1 | AĞIR SERİ KİLİTLEME YAYI | SPRING | | | ♦ | ♦ | ♦ | ♦ | ♦ |
| 116 | K21.06048 | 389 263 1031 | | 1 | KÜÇÜK GERİ VİTES DİŞLİSİ 21 DİŞ | REVERSE IDLER GEAR 21 T. | | | ♦ | ♦ | ♦ | ♦ | ♦ |
| 117 | K21.03838 | 012 981 8910 | (012 981 9010) | 1 | KÜÇÜK GERİ VİTES MASURA BİLYA | NEEDLE CAGE | 42X50X51mm | | ♦ | ♦ | ♦ | ♦ | ♦ |
| | | | (019 981 1310) | | | | | | | | | | |
| 118 | K21.06031 | 389 263 0850 | | 1 | K.GERİ VİTES MASURA BİLYA ÇANAĞI | BUSHING | 18mm | | ♦ | ♦ | ♦ | ♦ | ♦ |
| 119 | K21.06037 | 976 263 0030 | (976 263 1230) | 1 | KÜÇÜK GERİ VİTES PİMİ | PIN | | | ♦ | ♦ | ♦ | ♦ | ♦ |
| 120 | K21.07010 | 945 263 0041 | | 1 | KÜÇÜK GERİ VİTES PİM KİLİTLEMESİ | KEY | | | ♦ | ♦ | ♦ | ♦ | ♦ |
| 121 | K21.04317 | | | Kit | RAYNEL TAKIMI | WASHER KIT | | | ♦ | ♦ | ♦ | ♦ | ♦ |
| 122 | | 960 260 4230 | | Kit | VİTES HİLAL TAKIMI | REPAIR KIT | | | | | | | ♦ |
| 123 | K21.04308 | 960 265 0874 | (945 265 1374) | 2 | HİLAL CİVATASI | PIN | | | | | | | ♦ |
| | | | (960 265 0674) | | | | | | | | | | |
| 124 | | 960 260 0531 | | Kit | VİTES HİLAL ÇITA TAKIMI | REPAIR KIT | | | | | | | ♦ |
| 125 | | 960 260 0732 | | Kit | VİTES HİLAL ÇITA TAKIMI | REPAIR KIT | | | | | | | ♦ |

NOTES :
Parts encoded alphabetic and numaric are used together.

GEARBOX TYPE:
715510 - 715516 - 715517 - G211 - 16 / 17,03 - 1,00
715513 - 715518 - G231 -16 / 17,03 - 1,00

NOTLAR :
Alfabetik ve rakam ile kodlanan parçalar birlikte kullanılır.

ŞANZIMAN TİPLERİ:
715510 - 715516 - 715517 - G211 - 16 / 17,03 - 1,00
715513 - 715518 - G231 -16 / 17,03 - 1,00





Original parts names, oem numbers, symbols and descriptions used in this catalogue are for reference purposes only.

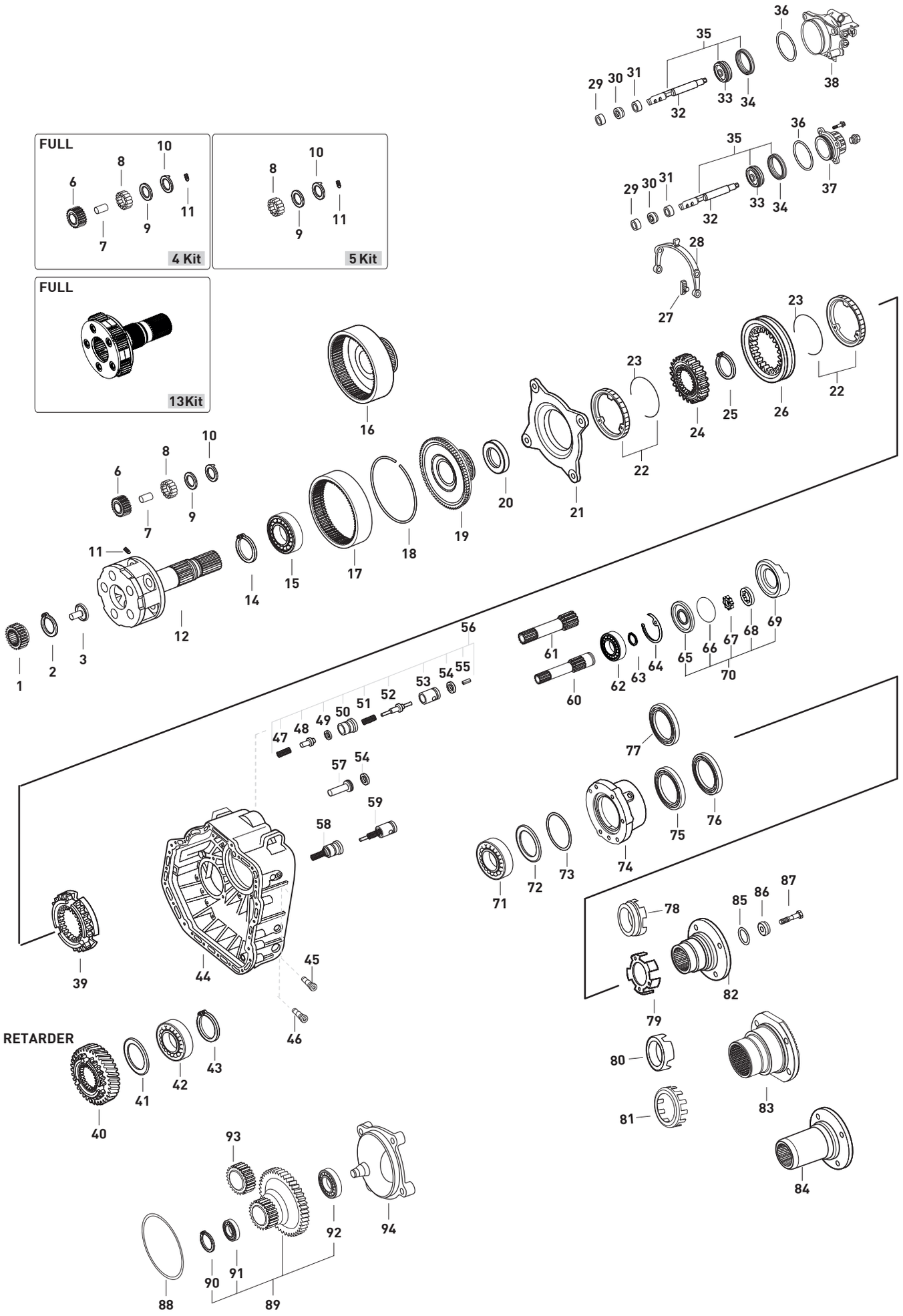






Original parts names, oem numbers, symbols and descriptions used in this catalogue are for reference purposes only.

| Fig. | Kacmaz No | Oem No | Oem Old No | Pcs. | Ürün Tanımı | Description | Sizes | Not | 715510 | 715516 | 715517 | 715513 | 715518 |
|---|---|---|---|---|---|---|---|---|---|---|---|---|---|
| 1 | K21.03169 | 945 262 0909 | (389 262 0809) | 1 | GÜNEŞ DİŞLİ 25 DİŞ | SUN GEAR 25 T. | | | ♦ | ♦ | ♦ | ♦ | |
| | | | (389 262 0909) | | | | | | | | | | |
| 1 | K21.06506 | 960 262 0009 | (948 262 0209) | 1 | GÜNEŞ DİŞLİ 25 DİŞ | SUN GEAR 25 T. | | | | | | | ♦ |
| 2 | K21.04115 | 000472 060000 | | 1 | HEYKEL YAĞ PİPET SEKMANI | SNAP RING | 2,00mm | | ♦ | ♦ | ♦ | ♦ | ♦ |
| 3 | K21.03435 | 945 269 0834 | (389 269 4734) | 1 | ŞANZIMAN HEYKELİ YAĞ PİPETİ | OIL TUBE | | | ♦ | ♦ | ♦ | ♦ | ♦ |
| 4 | K21.03178 | 946 260 0097 | (655 260 0197) | Kit | HEYKEL KOZA DİŞLİ TAKIMI | PLANETARY GEAR SET | | | ♦ | ♦ | ♦ | ♦ | ♦ |
| 5 | K21.03663 | | | Kit | HEYKEL BİLYA VE PUL TAKIMI | WASHER KIT | | | ♦ | ♦ | ♦ | ♦ | ♦ |
| 6 | K21.03436 | 945 262 0006 | | 5 | HEYKEL KOZA DİŞLİSİ 28 DİŞ | PLANETARY GEAR 28 T. | | | ♦ | ♦ | ♦ | ♦ | ♦ |
| 7 | K21.03437 | 389 262 0407 | | 5 | HEYKEL KOZA DİŞLİ PİMİ | PLANETARY GEAR PIN | | | ♦ | ♦ | ♦ | ♦ | ♦ |
| 8 | K21.03816 | 000 981 4186 | (000 981 4386) | 125 | HEYKEL KOZA DİŞLİ TANE BİLYA | NEEDLE ROLLER | D5X39,6 | | ♦ | ♦ | ♦ | ♦ | ♦ |
| 9 | K21.04074 | 389 262 0162 | (389 262 6462) | 10 | HEYKEL KOZA DİŞLİ PULU | THRUST WASHER | | | ♦ | ♦ | ♦ | ♦ | ♦ |
| | | | (389 262 0562) | | | | | | | | | | |
| 10 | K21.04075 | 945 262 1162 | (945 262 0162) | 10 | HEYKEL KOZA DİŞLİ PULU | THRUST WASHER | | | ♦ | ♦ | ♦ | ♦ | ♦ |
| | | | (389 262 1462) | | | | | | | | | | |
| 11 | K21.03418 | 000914 006109 | | 5 | HEYKEL KOZA DİŞLİ VİDASI | THREADED PIN | M6X14 | | ♦ | ♦ | ♦ | ♦ | ♦ |
| 12 | K21.03180 | 946 260 3561 | (946 260 3661) | 1 | ŞANZIMAN HEYKELİ (BOŞ) | PLANETARY CARRIER (EMPTY) | | | ♦ | ♦ | ♦ | ♦ | ♦ |
| | | | (945 260 4561) | | | | | | | | | | |
| | | | (945 260 4461) | | | | | | | | | | |
| 13 | K21.06313 | 945 260 4661 | | Kit | ŞANZIMAN HEYKELİ (DOLU) | PLANETARY CARRIER (FULL) | | | ♦ | ♦ | ♦ | ♦ | ♦ |
| 14 | K21.06864 | 000472 130000 | | 1 | ÇEMBER DİŞLİ BİLYA SEKMANI | RETAINING RING | 130X4mm | | ♦ | ♦ | ♦ | ♦ | ♦ |
| 15 | K21.03614 | 008 981 1325 | (004 981 8725) | 1 | ÇEMBER DİŞLİ BİLYASI | ROLLER BEARING | 90x130x14mm | | ♦ | ♦ | ♦ | ♦ | ♦ |
| | | | (004 981 8825) | | | | | | | | | | |
| | | | (004 981 9425) | | | | | | | | | | |
| 16 | K21.03438 | 945 262 0108 | (389 262 0808) | 1 | ÇEMBER DİŞLİ 85 DİŞ | RING WHEEL 85 T. | | | ♦ | ♦ | ♦ | ♦ | |
| 17 | K21.03440 | 945 262 0208 | | 1 | ÇEMBER DİŞLİ 85 DİŞ | RING WHEEL 85 T. | | | ♦ | ♦ | ♦ | ♦ | |
| 17 | K21.03449 | 945 262 1208 | (945 262 0808) | 1 | ÇEMBER DİŞLİ 85 DİŞ | RING WHEEL 85 T. | | | ♦ | ♦ | ♦ | | ♦ |
| 18 | K21.04253 | 389 262 0773 | | 1 | ÇEMBER DİŞLİ SEKMANI | LOCK RING | | | ♦ | ♦ | ♦ | ♦ | ♦ |
| 19 | K21.03442 | 930 262 0125 | (389 262 1425) | 1 | PLANET ÇAN DİŞLİ 85 DİŞ | CARRIER HUB 85 T. | | | ♦ | ♦ | ♦ | ♦ | ♦ |
| 20 | K21.04076 | 389 262 0251 | | 1 | ŞANZIMAN HEYKELİ ARA PULU | SPACER RING | | | ♦ | ♦ | ♦ | ♦ | ♦ |
| 21 | K21.03018 | 389 260 2036 | | 1 | TABLA SENKROMENÇ | FOLLOWER RING | | (1) | ♦ | ♦ | ♦ | ♦ | |
| 21 | K21.03037 | 947 260 3036 | (947 260 0836) | 1 | TABLA SENKROMENÇ | FOLLOWER RING | | (2) | ♦ | ♦ | ♦ | ♦ | ♦ |
| 22 | K21.03017 | 389 262 0537 | (389 262 0037) | 2 | AĞIR SERİ FRENLEME (Mo) | SYNCHRONIZING CONE / Mo | | (1) | ♦ | ♦ | ♦ | ♦ | |
| | | | (389 262 0137) | | | | | | | | | | |
| | | | (389 262 3337) | | | | | | | | | | |
| 22 | K21.03078 | 945 260 0850 | | 2 | AĞIR SERİ FRENLEME (C) | SYNCHRONIZING CONE / C | | (1) | ♦ | ♦ | ♦ | ♦ | |
| 22 | K21.03185 | 947 260 0945 | | 2 | AĞIR SERİ FRENLEME (Mo) | SYNCHRONIZING CONE / Mo | | (2) | ♦ | ♦ | ♦ | ♦ | ♦ |
| 22 | K21.06273 | 947 260 3045 | | 2 | AĞIR SERİ FRENLEME (C) | SYNCHRONIZING CONE / C | | (2) | ♦ | ♦ | ♦ | ♦ | ♦ |
| 23 | K21.03077 | 389 262 0293 | | 2 | FRENLEME TELİ | SPRING | | | ♦ | ♦ | ♦ | ♦ | ♦ |
| 24 | K21.03079 | 389 262 4935 | (389 262 2035) | 1 | AĞIR SERİ YILDIZ DİŞLİ 73 DİŞ | SYNCHRONIZER HUB 73 T. | | | ♦ | ♦ | ♦ | ♦ | ♦ |
| | | | (400 262 0335) | | | | | | | | | | |
| 25 | K21.04356 | 000471 120000 | | 1 | AĞIR SERİ YILDIZ DİŞLİ SEKMANI | RETAINING RING | | | ♦ | ♦ | ♦ | ♦ | ♦ |
| 26 | K21.03028 | 945 262 6623 | (945 262 0823) | 1 | AĞIR SERİ HALKA 73 DİŞ | ENGAGING SLEEVE 73 T. | | (1) | ♦ | ♦ | ♦ | ♦ | |
| | | | (389 262 1623) | | | | | | | | | | |
| | | | (389 262 3823) | | | | | | | | | | |
| | | | (945 262 2623) | | | | | | | | | | |
| 26 | K21.03033 | 945 262 6923 | (930 262 0623) | 1 | AĞIR SERİ HALKA | ENGAGING SLEEVE | | (2) | ♦ | ♦ | ♦ | ♦ | ♦ |
| 27 | K21.03406 | 389 265 2449 | (945 265 0349) | 2 | AĞIR SERİ HİLAL PABUCU | SLIDING PAD | | (1) | ♦ | ♦ | ♦ | ♦ | |
| | | | (387 265 0049) | | | | | | | | | | |
| | | | (389 265 0949) | | | | | | | | | | |
| | | | (389 265 1249) | | | | | | | | | | |
| 27 | K21.03431 | 960 265 0049 | (947 265 0349) | 2 | AĞIR SERİ HİLAL PABUCU | SLIDING PAD | | (2) | ♦ | ♦ | ♦ | ♦ | ♦ |
| | | | (389 265 2749) | | | | | | | | | | |
| 28 | K21.06411 | 947 265 1701 | (389 265 0901) | 1 | AĞIR SERİ HİLALİ | SHIFTING FORK | | (1) | ♦ | ♦ | ♦ | ♦ | |
| | | | (930 265 0001) | | | | | | | | | | |
| | | | (947 265 0801) | | | | | | | | | | |

NOTES :
Parts encoded alphabetic and numaric are used together.

GEARBOX TYPE:
715510 - 715516 - 715517 - G211 - 16 / 17,03 - 1,00
715513 - 715518 - G231 -16 / 17,03 - 1,00

NOTLAR :
Alfabetik ve rakam ile kodlanan parçalar birlikte kullanılır.

ŞANZIMAN TİPLERİ:
715510 - 715516 - 715517 - G211 - 16 / 17,03 - 1,00
715513 - 715518 - G231 -16 / 17,03 - 1,00





Original parts names, oem numbers, symbols and descriptions used in this catalogue are for reference purposes only.

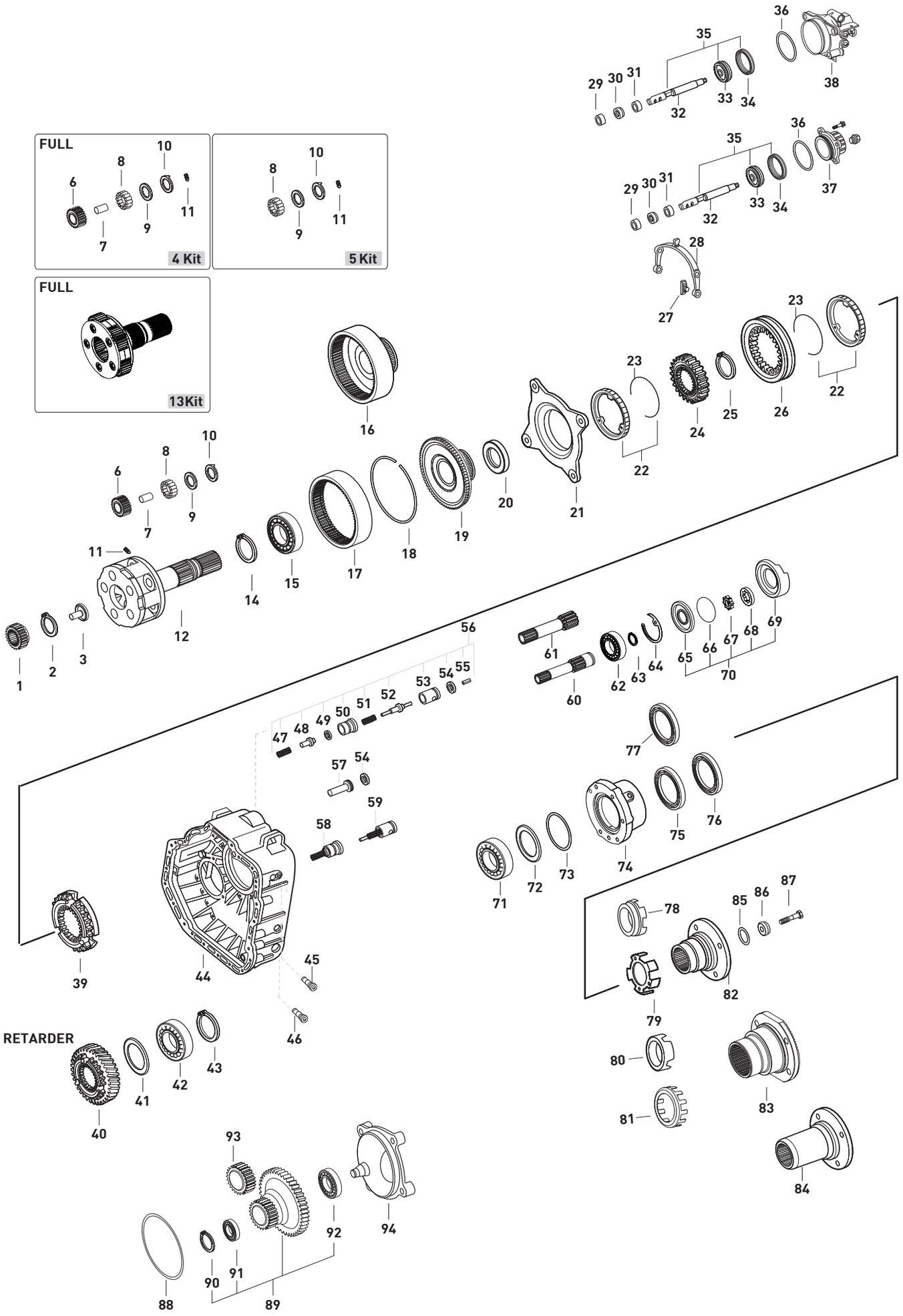




Original parts names, oem numbers, symbols and descriptions used in this catalogue are for reference purposes only.

| Fig. | Kacmaz No | Oem No | Oem Old No | Pcs. | Ürün Tanımı | Description | Sizes | Not | 715510 | 715516 | 715517 | 715513 | 715518 |
|---|---|---|---|---|---|---|---|---|---|---|---|---|---|
| 28 | K21.06324 | 947 265 1901 | (947 265 0901) | 1 | AĞIR SERİ HİLALİ | SHIFTING FORK | | (2) | ♦ | ♦ | ♦ | ♦ | ♦ |
| 29 | K21.04254 | 000 992 7703 | (389 267 2250) | 1 | AĞIR SERİ HİLAL MİL BURCU | BUSHING | 21X25X20mm | | ♦ | ♦ | ♦ | ♦ | ♦ |
| 30 | K21.03523 | 000 267 0197 | (000 267 0397) | 1 | AĞIR SERİ HİLAL MİL KEÇESİ | OIL SEAL | 22X32X8mm | | ♦ | ♦ | ♦ | ♦ | ♦ |
| 31 | K21.04178 | 387 267 0650 | (387 267 0250) | 1 | AĞIR SERİ HİLAL MİL BURCU | BUSHING | 34X22X8mm | | ♦ | ♦ | ♦ | ♦ | ♦ |
| 32 | | 945 267 2117 | (389 267 7317) | 1 | AĞIR SERİ HİLAL MİLİ | SHIFTING ROD | | (B)(C) | | | | | ♦ |
| 32 | K21.06492 | 930 267 0217 | (945 267 2217) | 1 | AĞIR SERİ HİLAL MİLİ | SHIFTING ROD | | (B) | | | | | ♦ |
| 32 | | 389 267 3517 | | 1 | AĞIR SERİ HİLAL MİLİ | SHIFTING ROD | | (A) | ♦ | ♦ | ♦ | ♦ | |
| 33 | K21.06975 | 960 267 0818 | (389 267 1018) | 1 | AĞIR SERİ HİLAL MİL PİSTONU | PISTON | | (A) | ♦ | ♦ | ♦ | ♦ | ♦ |
| | | | (389 267 0118) | | | | | | | | | | |
| 34 | K21.03525 | 024 997 8347 | (020 997 6747) | 1 | AĞIR SERİ SİLİNDİR KEÇESİ | SEAL RING | 77x90x17mm | (A)(B)(C) | ♦ | ♦ | ♦ | ♦ | ♦ |
| | | | (014 997 3647) | | | | | | | | | | |
| | | | (014 997 5147) | | | | | | | | | | |
| 35 | | 930 260 2589 | | 1 | AĞIR SERİ HİLAL MİLİ KOMPLE | SHIFTING ROD COMPLETE | | (A) | ♦ | | | ♦ | |
| 36 | K21.06968 | 017 997 6545 | | 1 | AĞIR SERİ SİLİNDİR ORİNGİ | O-RING | 96X1,5mm | (A)(B)(C) | ♦ | ♦ | ♦ | ♦ | ♦ |
| 37 | K21.03540 | 945 267 1119 | (389 267 1319) | 1 | AĞIR SERİ SİLİNDİRİ | SHIFTING CYLINDER | | (A) | ♦ | ♦ | ♦ | ♦ | |
| | | | (389 267 4219) | | | | | | | | | | |
| | | | (945 267 1319) | | | | | | | | | | |
| | | | (945 267 1619) | | | | | | | | | | |
| 38 | K21.03541 | 001 260 4963 | | 1 | AĞIR SERİ SİLİNDİRİ | SHIFTING CYLINDER | | (B) | ♦ | ♦ | ♦ | ♦ | |
| 38 | | 945 260 3763 | | 1 | AĞIR SERİ SİLİNDİRİ | SHIFTING CYLINDER | | (C) | | | | | ♦ |
| 39 | K21.03187 | 389 262 9234 | (945 262 1234) | 1 | SERİ SENKROMENÇ | ENGAGING RING | | (1) | ♦ | ♦ | ♦ | ♦ | |
| 39 | K21.03186 | 945 262 3834 | | 1 | SERİ SENKROMENÇ | ENGAGING RING | | (2) | ♦ | ♦ | ♦ | ♦ | ♦ |
| 40 | K21.06050 | 945 264 0130 | (389 264 0730) | 1 | RETARDER DİŞLİSİ 63 DİŞ | RETARDER GEAR 63 T. | | (1) | ♦ | | | ♦ | |
| 40 | K21.03188 | 930 264 0320 | | 1 | RETARDER DİŞLİSİ 64 DİŞ | RETARDER GEAR 64 T. | | (2) | ♦ | | | ♦ | |
| 40 | | 945 264 0520 | | 1 | RETARDER DİŞLİSİ 63 DİŞ | RETARDER GEAR 63 T. | | (2) | ♦ | | | ♦ | |
| 40 | | 960 264 0020 | | 1 | RETARDER DİŞLİSİ 64 DİŞ | RETARDER GEAR 64 T. | | (2) | | | | | ♦ |
| 41 | | 387 264 0064 | | 1 | YAĞ TOPLAMA SACI | OIL BAFFLE | | | ♦ | | | ♦ | |
| 42 | | 007 981 8201 | (007 981 8701) | 1 | ŞANZIMAN HEYKEL BİLYASI | BEARING | 103X140X26mm | (U) | ♦ | | | ♦ | |
| 43 | | 000472 140000 | | 1 | HEYKEL BİLYA SEKMANI | LOCK RING | 140X4mm | | ♦ | | | ♦ | |
| 44 | | 945 260 6812 | | 1 | ŞANZIMAN ARKA GÖVDE | HOUSING | | | ♦ | ♦ | ♦ | ♦ | |
| 44 | K21.07000 | 960 260 5912 | (960 260 0112) | 1 | ŞANZIMAN ARKA GÖVDE | HOUSING | | | | | | | ♦ |
| 45 | K21.06026 | 945 265 3074 | (945 265 1474) | 2 | HİLAL CİVATASI | PIN | | (1) | ♦ | ♦ | ♦ | ♦ | |
| | | | (945 265 1774) | | | | | | | | | | |
| | | | (945 265 2674) | | | | | | | | | | |
| 46 | K21.04307 | 960 265 0774 | (945 265 1274) | 2 | HİLAL CİVATASI | PIN | | (2) | ♦ | ♦ | ♦ | ♦ | ♦ |
| | | | (945 265 2974) | | | | | | | | | | |
| | | | (945 265 2774) | | | | | | | | | | |
| 47 | | 389 993 5301 | | 1 | YAĞ BASINÇ YAYI | SPRING | | | ♦ | ♦ | ♦ | ♦ | |
| 48 | | 389 269 1026 | (389 269 0926) | 1 | YAĞ BASINÇ VALFİ | SELECTOR VALVE | | | ♦ | ♦ | ♦ | ♦ | |
| 49 | K21.04210 | 013 997 0148 | (020 997 8348) | 1 | YAĞ BASINÇ ORİNGİ | O-RING | 13,3X2,4mm | | ♦ | ♦ | ♦ | ♦ | |
| 50 | | 389 269 1444 | (389 269 0744) | 1 | YAĞ BASINÇ VALF GÖVDESİ | VALVE INSERT | | | ♦ | ♦ | ♦ | ♦ | |
| 51 | | 389 993 4401 | | 1 | YAĞ BASINÇ VALF MİL YAYI | SPRING | 11,5X41,9X1mm | | ♦ | ♦ | ♦ | ♦ | |
| 52 | | 389 269 0826 | | 1 | YAĞ BASINÇ VALF MİLİ | SELECTOR VALVE | | | ♦ | ♦ | ♦ | ♦ | |
| 53 | | 389 269 0844 | | 1 | YAĞ BASINÇ VALF TOPU | BALL | | | ♦ | ♦ | ♦ | ♦ | |
| 54 | K21.04212 | 013 997 0048 | (020 997 8248) | 1 | YAĞ BASINÇ VALF ORİNGİ | O-RING | 19,2X3mm | | ♦ | ♦ | ♦ | ♦ | |
| 55 | | 001481 004049 | (001481 004001) | 1 | EMNİYET PİMİ | CLAMPING SLEEVE | | | ♦ | ♦ | ♦ | ♦ | |
| 56 | K21.06962 | 655 260 0157 | | Kit | YAĞ BASINÇ VALFİ KOMPLE | VALVE KIT | | | ♦ | ♦ | ♦ | ♦ | |
| 57 | K21.06979 | 389 265 0176 | (389 265 0076) | 1 | YAĞ BASINÇ VALFİ ALIN FİBERİ | WASHER | | | ♦ | ♦ | ♦ | ♦ | |
| 58 | K21.06953 | 960 260 1057 | | Kit | YAĞ BASINÇ VALFİ KOMPLE | VALVE KIT | | | ♦ | ♦ | ♦ | ♦ | |
| 58 | K21.06988 | 960 260 2257 | | Kit | YAĞ BASINÇ VALFİ KOMPLE | VALVE KIT | | | | | | | ♦ |
| 59 | K21.06973 | 960 260 1257 | | Kit | YAĞ BASINÇ VALFİ KOMPLE | VALVE KIT | | | ♦ | ♦ | ♦ | ♦ | |
| 59 | K21.06989 | 960 260 2157 | (960 260 3757) | Kit | YAĞ BASINÇ VALFİ KOMPLE | VALVE KIT | | | | | | | ♦ |
| 60 | K21.03085 | 947 264 0005 | (389 269 0310) | 1 | YAĞ POMPA MİLİ | OIL PUMP SHAFT | | (3) | ♦ | | | ♦ | |
| | | | (389 269 1210) | | | | | | | | | | |
| 61 | K21.03198 | 947 269 1010 | (945 269 1010) | 1 | YAĞ POMPA MİLİ | OIL PUMP SHAFT | | (4) | ♦ | ♦ | ♦ | ♦ | |

NOTES :
Parts encoded alphabetic and numaric are used together.

GEARBOX TYPE:
715510 - 715516 - 715517 - G211 - 16 / 17,03 - 1,00
715513 - 715518 - G231 -16 / 17,03 - 1,00

NOTLAR :
Alfabetik ve rakam ile kodlanan parçalar birlikte kullanılır.

ŞANZIMAN TİPLERİ:
715510 - 715516 - 715517 - G211 - 16 / 17,03 - 1,00
715513 - 715518 - G231 -16 / 17,03 - 1,00





Original parts names, oem numbers, symbols and descriptions used in this catalogue are for reference purposes only.

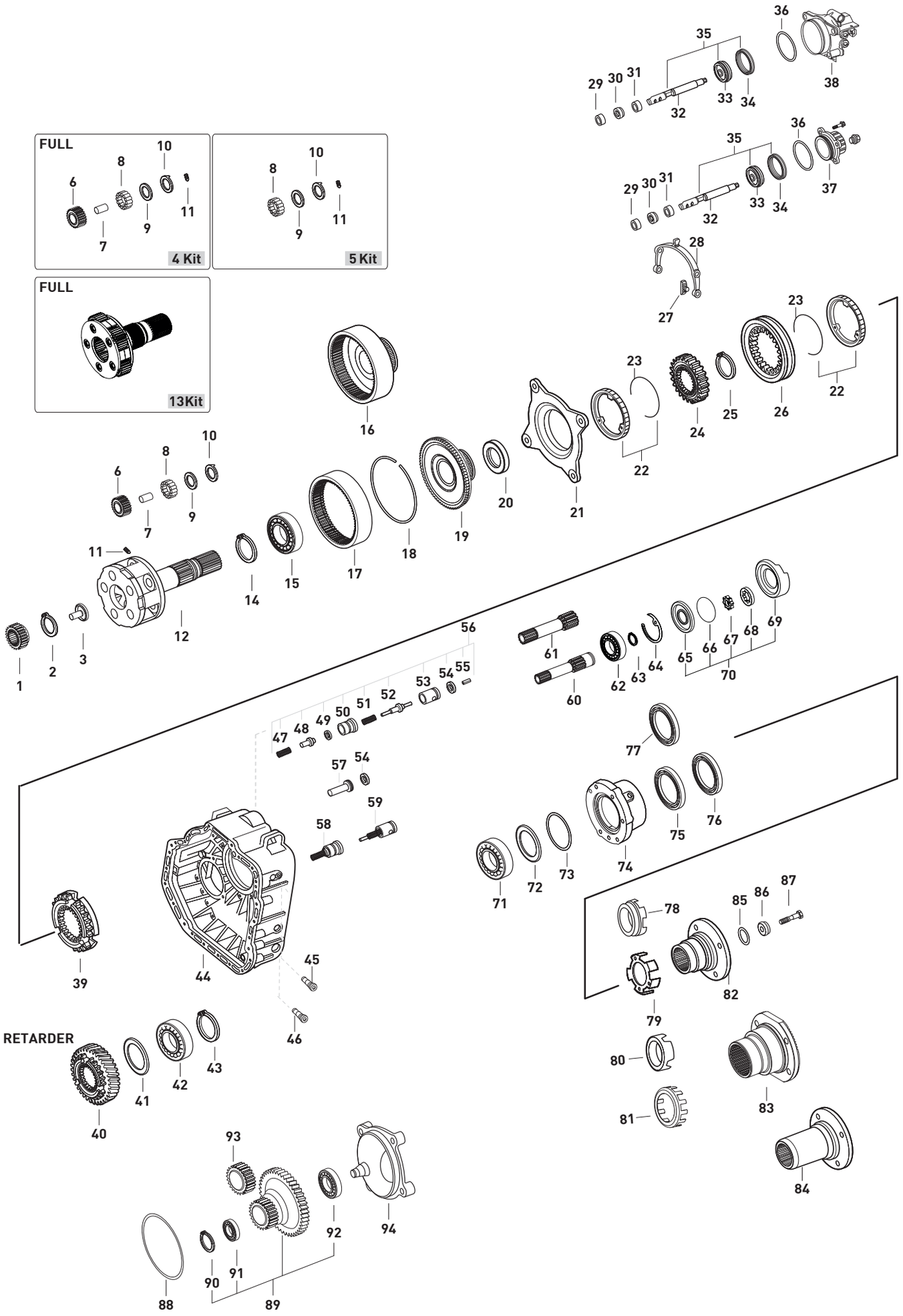






Original parts names, oem numbers, symbols and descriptions used in this catalogue are for reference purposes only.

| Fig. | Kacmaz No | Oem No | Oem Old No | Pcs. | Ürün Tanımı | Description | Sizes | Not | 715510 | 715516 | 715517 | 715513 | 715518 |
|---|---|---|---|---|---|---|---|---|---|---|---|---|---|
| 61 | K21.06298 | 947 269 1110 | (945 269 1110) | 1 | YAĞ POMPA MİLİ | OIL PUMP SHAFT | | (4) | ♦ | | | ♦ | |
| 61 | K21.06310 | 389 269 1310 | | 1 | YAĞ POMPA MİLİ | OIL PUMP SHAFT | | (4) | ♦ | | | ♦ | |
| 61 | | 960 269 0010 | | 1 | YAĞ POMPA MİLİ | OIL PUMP SHAFT | | (4) | | | | | ♦ |
| 61 | | 960 269 0110 | | 1 | YAĞ POMPA MİLİ | OIL PUMP SHAFT | | (4) | | | | | ♦ |
| 62 | K21.03613 | 004 981 9225 | (004 981 8625) | 1 | PTO MİL BİLYASI | ROLLLER BEARING | 45X75X16mm | (3) | ♦ | ♦ | ♦ | ♦ | |
| | | | (004 981 9025) | | | | | | | | | | |
| 62 | K21.03648 | 010 981 9025 | (010 981 8425) | 1 | PTO MİL BİLYASI | ROLLLER BEARING | 17X35X10mm | (4) | ♦ | ♦ | ♦ | ♦ | ♦ |
| | | | (008 981 5425) | | | | | | | | | | |
| | | | (008 981 3425) | | | | | | | | | | |
| 63 | K21.06964 | 000471 045000 | (003 994 3741) | 1 | PTO MİL BİLYA SEKMANI | RETAINING RING | 1,75mm | (3) | ♦ | ♦ | ♦ | ♦ | ♦ |
| 63 | | 912009 045100 | | 1 | PTO MİL BİLYA SEKMANI | RETAINING RING | | (4) | ♦ | ♦ | ♦ | ♦ | |
| 64 | K21.94304 | | | 1 | YAĞ POMPA PULU | SPACER WASHER | 0,70mm | | ♦ | ♦ | ♦ | ♦ | ♦ |
| 64 | K21.04304 | 389 262 6254 | | 1 | YAĞ POMPA PULU | SPACER WASHER | 0,80mm | | ♦ | ♦ | ♦ | ♦ | ♦ |
| 64 | K21.04303 | 389 262 5954 | | 1 | YAĞ POMPA PULU | SPACER WASHER | 0,90mm | | ♦ | ♦ | ♦ | ♦ | ♦ |
| 64 | K21.04302 | 389 262 5754 | | 1 | YAĞ POMPA PULU | SPACER WASHER | 1,00mm | | ♦ | ♦ | ♦ | ♦ | ♦ |
| 64 | K21.04301 | 389 262 5554 | | 1 | YAĞ POMPA PULU | SPACER WASHER | 1,10mm | | ♦ | ♦ | ♦ | ♦ | ♦ |
| 64 | K21.04305 | 389 262 5354 | | 1 | YAĞ POMPA PULU | SPACER WASHER | 1,20mm | | ♦ | ♦ | ♦ | ♦ | ♦ |
| 65 | K21.03412 | 945 269 0201 | (389 269 2501) | 1 | YAĞ POMPA KAPAĞI | OIL PUMP COVER | | | ♦ | ♦ | ♦ | ♦ | ♦ |
| 65 | K21.03558 | 947 264 0287 | | 1 | YAĞ POMPA KAPAĞI | OIL PUMP COVER | | PTO | ♦ | ♦ | ♦ | ♦ | ♦ |
| 66 | K21.03511 | 029 997 5748 | | 1 | YAĞ POMPA ORİNGİ | O-RING | 112X2,5mm | | ♦ | ♦ | ♦ | ♦ | ♦ |
| 67 | K21.03413 | 389 269 1406 | (389 269 1506) | 1 | YAĞ POMPA İÇ ROTOR | OIL PUMP GEAR | | | ♦ | ♦ | ♦ | ♦ | ♦ |
| | | | (945 260 0090) | | | | | | | | | | |
| 68 | K21.03414 | 389 269 0706 | (389 269 1206) | 1 | YAĞ POMPA DIŞ ROTOR | ROTOR | | | ♦ | ♦ | ♦ | ♦ | ♦ |
| 69 | K21.03478 | 947 269 1001 | | 1 | YAĞ POMPA GÖVDESİ | OIL PUMP HOUSING | | (M) | ♦ | ♦ | ♦ | ♦ | ♦ |
| 69 | K21.03415 | 389 269 3801 | | 1 | YAĞ POMPA GÖVDESİ | OIL PUMP HOUSING | | (N) | ♦ | ♦ | ♦ | ♦ | |
| 70 | K21.03475 | 389 260 0790 | | 1 | YAĞ POMPASI | OIL PUMP | | (M) | ♦ | ♦ | ♦ | ♦ | ♦ |
| 70 | K21.03411 | 389 260 0690 | (389 260 0590) | 1 | YAĞ POMPASI | OIL PUMP | | (N) | ♦ | ♦ | ♦ | ♦ | |
| 71 | K21.03625 | 008 981 3025 | (008 981 5225) | 1 | ŞANZIMAN ARKA BİLYA | ROLLER BEARING | 80x150x28mm | | ♦ | ♦ | ♦ | ♦ | ♦ |
| | | | (007 981 3325) | | | | | | | | | | |
| 72 | K21.04081 | 389 262 7754 | | 1 | ŞANZIMAN HEYKEL AYAR PULU | THRUST WASHER | 1,40mm | | ♦ | ♦ | ♦ | ♦ | ♦ |
| 72 | K21.04139 | 389 262 5152 | | 1 | ŞANZIMAN HEYKEL AYAR PULU | THRUST WASHER | 0,80mm | | ♦ | ♦ | ♦ | ♦ | ♦ |
| 72 | K21.04080 | 389 262 5052 | | 1 | ŞANZIMAN HEYKEL AYAR PULU | THRUST WASHER | 0,40mm | | ♦ | ♦ | ♦ | ♦ | ♦ |
| 72 | K21.04079 | 389 262 7654 | | 1 | ŞANZIMAN HEYKEL AYAR PULU | THRUST WASHER | 0,25mm | | ♦ | ♦ | ♦ | ♦ | ♦ |
| 72 | K21.04140 | 389 262 4952 | | 1 | ŞANZIMAN HEYKEL AYAR PULU | THRUST WASHER | 0,20mm | | ♦ | ♦ | ♦ | ♦ | ♦ |
| 72 | K21.04141 | 389 262 4852 | | 1 | ŞANZIMAN HEYKEL AYAR PULU | THRUST WASHER | 0,15mm | | ♦ | ♦ | ♦ | ♦ | ♦ |
| 72 | K21.04078 | 389 262 4752 | | 1 | ŞANZIMAN HEYKEL AYAR PULU | THRUST WASHER | 0,10mm | | ♦ | ♦ | ♦ | ♦ | ♦ |
| 73 | K21.06713 | 015 997 2848 | (020 997 8548) | 1 | ŞANZIMAN ARKA KAPAK ORİNGİ | O-RING | 149,5X3mm | | ♦ | ♦ | ♦ | ♦ | ♦ |
| 74 | K21.06238 | 389 261 1920 | (389 261 2020) | 1 | ŞANZIMAN ARKA KAPAK | COVER | | | ♦ | ♦ | ♦ | ♦ | |
| 74 | K21.06239 | 930 261 0420 | (930 261 0520) | 1 | ŞANZIMAN ARKA KAPAK | COVER | | RETARDER | ♦ | | | ♦ | |
| | | | (389 261 1820) | | | | | | | | | | |
| 75 | K21.03507 | 013 997 7347 | (015 997 4247) | 1 | ŞANZIMAN ARKA KEÇE | OIL SEAL | 95X115X13/12mm | | ♦ | ♦ | ♦ | ♦ | ♦ |
| | | | (013 997 5647) | | | | | | | | | | |
| 76 | K21.03528 | 013 997 7247 | (014 997 1947) | 1 | ŞANZIMAN ARKA KEÇE | OIL SEAL | 95X115X13mm | (10)(12) | ♦ | ♦ | ♦ | ♦ | ♦ |
| | | | (013 997 5547) | | | | | | | | | | |
| 76 | | 015 997 6647 | (015 997 6447) | 1 | ŞANZIMAN ARKA KEÇE | OIL SEAL | 115X140X12mm | (U) | ♦ | | | ♦ | |
| 77 | K21.03512 | 015 997 7846 | (023 997 1647) | 1 | ŞANZIMAN ARKA KEÇE | OIL SEAL | 95X115X15,5mm | | ♦ | ♦ | ♦ | ♦ | ♦ |
| 78 | | 945 262 0628 | (389 260 0350) | 1 | ŞANZIMAN KM DEVİR SACI | PULSE STAR | | (8) | ♦ | | | ♦ | |
| 79 | K21.04134 | 930 262 0028 | | 1 | ŞANZIMAN KM DEVİR SACI | PULSE STAR | | (6)(7) | ♦ | ♦ | ♦ | ♦ | |
| 80 | | 945 262 0228 | | 1 | ŞANZIMAN KM DEVİR SACI | PULSE STAR | | (9) | ♦ | ♦ | ♦ | ♦ | |
| 80 | | 945 262 0528 | (389 260 0150) | 1 | ŞANZIMAN KM DEVİR SACI | PULSE STAR | | (5) | ♦ | | | ♦ | |
| 81 | K21.06947 | 930 262 1428 | (930 262 0128) | 1 | ŞANZIMAN KM DEVİR SACI | PULSE STAR | | (11) | | | | | ♦ |
| 82 | K21.03084 | 389 262 0445 | | 1 | ŞANZIMAN FLANŞI | COMPANION FLANGE | 4-H, Ø180mm | (5) | ♦ | ♦ | ♦ | | |
| 82 | K21.03196 | 945 262 0045 | | 1 | ŞANZIMAN FLANŞI | COMPANION FLANGE | 4-H, Ø180mm | (6) | ♦ | ♦ | ♦ | ♦ | ♦ |
| 83 | | 389 262 0545 | | 1 | ŞANZIMAN FLANŞI | COMPANION FLANGE | 4-H, Ø180mm | (8) | ♦ | | | ♦ | |
| 83 | K21.03129 | 389 262 0645 | | 1 | ŞANZIMAN FLANŞI | COMPANION FLANGE | 4-H, Ø200mm | (9) | ♦ | | | | |

NOTES :
Parts encoded alphabetic and numaric are used together.

GEARBOX TYPE:
715510 - 715516 - 715517 - G211 - 16 / 17,03 - 1,00
715513 - 715518 - G231 -16 / 17,03 - 1,00

NOTLAR :
Alfabetik ve rakam ile kodlanan parçalar birlikte kullanılır.

ŞANZIMAN TİPLERİ:
715510 - 715516 - 715517 - G211 - 16 / 17,03 - 1,00
715513 - 715518 - G231 -16 / 17,03 - 1,00





Original parts names, oem numbers, symbols and descriptions used in this catalogue are for reference purposes only.

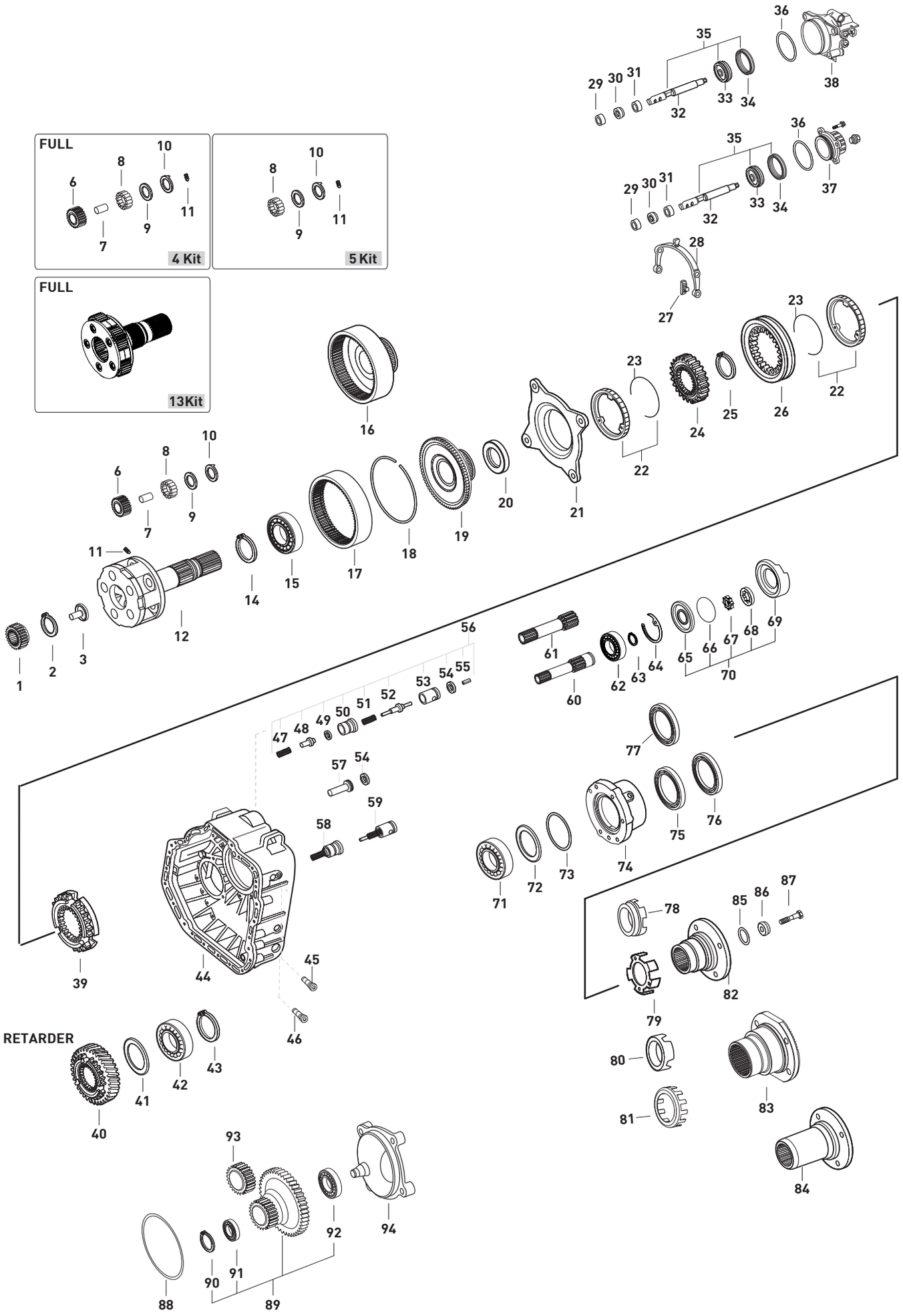






Original parts names, oem numbers, symbols and descriptions used in this catalogue are for reference purposes only.

| Fig. | Kacmaz No | Oem No | Oem Old No | Pcs. | Ürün Tanımı | Description | Sizes | Not | 715510 | 715516 | 715517 | 715513 | 715518 |
|---|---|---|---|---|---|---|---|---|---|---|---|---|---|
| 83 | | 389 262 0945 | | 1 | ŞANZIMAN FLANŞI | COMPANION FLANGE | 4-H, Ø200mm | (10) | ♦ | | | | |
| 83 | K21.03211 | 930 262 0045 | | 1 | ŞANZIMAN FLANŞI | COMPANION FLANGE | 4-H, Ø180mm | (7) | | | | ♦ | |
| 83 | K21.03195 | 930 262 0145 | | 1 | ŞANZIMAN FLANŞI | COMPANION FLANGE | Ø200mm | (10) | | | | ♦ | |
| 83 | K21.06052 | 945 262 0245 | | 1 | ŞANZIMAN FLANŞI | COMPANION FLANGE | 4-H, Ø200mm | (9)(11) | | | | | ♦ |
| 83 | K21.03443 | 930 262 0245 | | 1 | ŞANZIMAN FLANŞI | COMPANION FLANGE | 4-H, Ø180mm | (12) | ♦ | | | | |
| 84 | | 387 264 1945 | | 1 | ŞANZIMAN FLANŞI | COMPANION FLANGE | Ø198mm | (U) | ♦ | | | ♦ | |
| 84 | | 387 264 2045 | | 1 | ŞANZIMAN FLANŞI | COMPANION FLANGE | Ø198mm | (U) | ♦ | | | ♦ | |
| 85 | K21.04310 | 014 997 5148 | (020 997 8648) | 1 | ŞANZIMAN FLANŞ ORİNGİ | O-RING | 72,4X5,3mm | | ♦ | ♦ | ♦ | ♦ | ♦ |
| 85 | | 025 997 5345 | | 1 | ŞANZIMAN FLANŞ ORİNGİ | O-RING | 70,8x5,1mm | | ♦ | ♦ | ♦ | | |
| 85 | K21.06978 | 015 997 4348 | | 1 | ŞANZIMAN FLANŞ ORİNGİ | O-RING | 25X3mm | (M) | ♦ | ♦ | ♦ | ♦ | ♦ |
| 86 | K21.04214 | 945 262 0762 | | 1 | ŞANZIMAN FLANŞI ALIN PULU | THRUST WASHER | 93X20mm | (K) | ♦ | ♦ | ♦ | ♦ | ♦ |
| 86 | K21.06977 | 389 262 0362 | (945 262 0062) | 1 | ŞANZIMAN FLANŞI ALIN PULU | THRUST WASHER | 95X24mm | (L) | ♦ | ♦ | ♦ | ♦ | |
| 86 | K21.06283 | 387 264 1162 | | 1 | ŞANZIMAN FLANŞI ALIN PULU | THRUST WASHER | | (M) | ♦ | ♦ | ♦ | ♦ | ♦ |
| 87 | K21.06280 | 000000 006750 | (000000 005728) | 1 | ŞANZIMAN FLANŞI ALIN VİDASI | SCREW | M20X1,5X80 | (K) | ♦ | ♦ | ♦ | ♦ | ♦ |
| 87 | K21.06028 | 945 990 0019 | (389 990 2019) | 1 | ŞANZIMAN FLANŞI ALIN VİDASI | SCREW | M24X2X85 | (L) | ♦ | ♦ | ♦ | ♦ | |
| | | | (389 990 0219) | | | | | | | | | | |
| 87 | K21.06281 | 387 990 1719 | | 1 | ŞANZIMAN FLANŞI ALIN VİDASI | SCREW | M24X2X95 | (M) | ♦ | ♦ | ♦ | ♦ | ♦ |
| 88 | | 017 997 9145 | (028 997 8148) | 1 | ŞANZIMAN ARKA KAPAK ORİNGİ | O-RING | 198X3mm | | ♦ | | | ♦ | |
| 89 | K21.06311 | 930 264 0921 | | 1 | DİREKSİYON POMPA DİŞLİSİ | GEAR | | | ♦ | | | ♦ | |
| 90 | | 000983 020000 | | 1 | DİR.POMPA DİŞLİ BİLYA SEKMANI | RETAINING RING | | | ♦ | | | ♦ | |
| 91 | | 000625 006004 | | 1 | DİREKSİYON POMPA DİŞLİ ÖN BİLYA | ROLLER BEARING | | | ♦ | | | ♦ | |
| 92 | | 000625 506007 | | 1 | DİREKSİYON POMPA DİŞLİ ARKA BİLYA | ROLLER BEARING | | | ♦ | | | ♦ | |
| 93 | K21.03671 | 930 264 0721 | | 1 | DİREKSİYON POMPA DİŞLİ KARŞILIĞI | GEAR | | | ♦ | | | ♦ | |
| 94 | K21.06300 | 930 264 0111 | (930 264 0211) | 1 | DİREKSİYON POMPA KAPAĞI | HOUSING | | | ♦ | | | ♦ | |

NOTES :
Parts encoded alphabetic and numaric are used together.

GEARBOX TYPE:
715510 - 715516 - 715517 - G211 - 16 / 17,03 - 1,00
715513 - 715518 - G231 -16 / 17,03 - 1,00

NOTLAR :
Alfabetik ve rakam ile kodlanan parçalar birlikte kullanılır.

ŞANZIMAN TİPLERİ:
715510 - 715516 - 715517 - G211 - 16 / 17,03 - 1,00
715513 - 715518 - G231 -16 / 17,03 - 1,00





Original parts names, oem numbers, symbols and descriptions used in this catalogue are for reference purposes only.

SYNCHRONIZER KIT CONST.

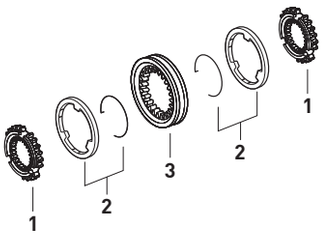


| Fig. | Kacmaz No. | Oem No | Oem Old No | Pcs. | Ürün Tanımı | Description |
|---|---|---|---|---|---|---|
| | K21.06218 | | | Kit | TAK.SENKROMENÇ KİT | SYNCHRONIZER KIT Const |
| 1 | K21.03147 | 945 262 7734 | (945 262 3634) | 2 | TAKVİYE SENKROMENÇ | ENGAGING RING |
| 2 | K21.03136 | 945 260 2245 | (946 262 6337) | 2 | TAKVİYE FRENLEME (Mo) | SYNCHRONIZING CONE / Mo |
| 3 | K21.03137 | 945 262 6823 | (945 262 6423) | 1 | TAKVİYE HALKA | ENGAGING SLEEVE |

SYNCHRONIZER KIT CONST.

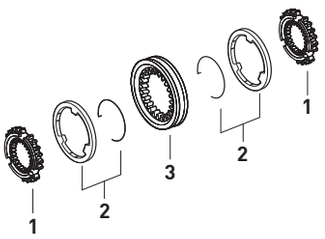


| Fig. | Kacmaz No. | Oem No | Oem Old No | Pcs. | Ürün Tanımı | Description |
|---|---|---|---|---|---|---|
| | K21.06219 | | | Kit | TAK.SENKROMENÇ KİT | SYNCHRONIZER KIT Const |
| 1 | K21.03024 | 389 262 5434 | (945 262 0334) | 2 | TAKVİYE SENKROMENÇ | ENGAGING RING |
| | | | (945 262 0134) | | | |
| 2 | K21.03015 | 389 262 0637 | (387 262 0837) | 2 | TAKVİYE FRENLEME (Mo) | SYNCHRONIZING CONE / Mo |
| 3 | K21.03002 | 945 262 2823 | (945 262 0323) | 1 | TAKVİYE HALKA | ENGAGING SLEEVE |
| | | | (945 262 0623) | | | |

SYNCHRONIZER KIT 3rd/4th NEW MODEL

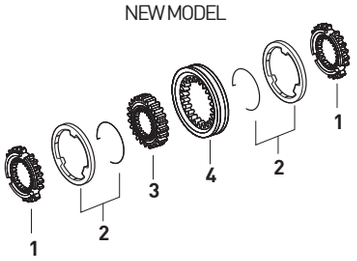


| Fig. | Kacmaz No. | Oem No | Oem Old No | Pcs. | Ürün Tanımı | Description |
|---|---|---|---|---|---|---|
| | K21.06211 | | | Kit | 3./4.VİTES SENK.KİT | SYNCH.KIT 3rd/4th |
| 1 | K21.03146 | 945 262 8234 | (945 262 5434) | 2 | 3./4.VİTES SENKROMENÇ | ENGAGING RING |
| 2 | K21.03148 | 947 260 1945 | (947 260 4645) | 2 | 3./4.VİTES FRENLEME (Mo) | SYNCHRONIZING CONE / Mo |
| | | | (946 262 6137) | | | |
| 3 | K21.03149 | 389 262 4735 | (389 262 4635) | 1 | 3./4.VİTES YILDIZ DİŞLİ | SYNCHRONIZER HUB |
| 4 | K21.03151 | 945 262 6523 | (930 262 0523) | 1 | 3./4.VİTES HALKA | ENGAGING SLEEVE |

SYNCHRONIZER KIT 3rd/4th NEW MODEL

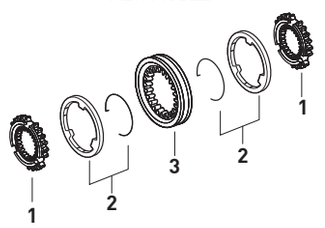


| Fig. | Kacmaz No. | Oem No | Oem Old No | Pcs. | Ürün Tanımı | Description |
|---|---|---|---|---|---|---|
| | K21.06512 | | | Kit | 3./4.VİTES SENK.KİT | SYNCH.KIT 3rd/4th |
| 1 | K21.03146 | 945 262 8234 | (945 262 5434) | 2 | 3./4.VİTES SENKROMENÇ | ENGAGING RING |
| 2 | K21.03148 | 947 260 1945 | (947 260 4645) | 2 | 3./4.VİTES FRENLEME (Mo) | SYNCHRONIZING CONE / Mo |
| | | | (946 262 6137) | | | |
| 3 | K21.03151 | 945 262 6523 | (930 262 0523) | 1 | 3./4.VİTES HALKA | ENGAGING SLEEVE |

SYNCHRONIZER KIT 3rd/4th OLD MODEL

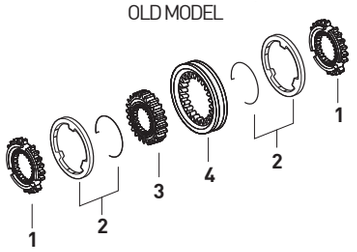


| Fig. | Kacmaz No. | Oem No | Oem Old No | Pcs. | Ürün Tanımı | Description |
|---|---|---|---|---|---|---|
| | K21.06212 | | | Kit | 3./4.VİTES SENK.KİT | SYNCH.KIT 3rd/4th |
| 1 | K21.03027 | 945 262 0534 | (389 262 5034) | 2 | 3./4.VİTES SENKROMENÇ | ENGAGING RING |
| 2 | K21.03016 | 389 262 0737 | (387 262 0937) | 2 | 3./4.VİTES FRENLEME (Mo) | SYNCHRONIZING CONE / Mo |
| 3 | K21.03149 | 389 262 4735 | (389 262 4635) | 1 | 3./4.VİTES YILDIZ DİŞLİ | SYNCHRONIZER HUB |
| 4 | K21.03009 | 945 262 2723 | (945 262 0423) | 1 | 3./4.VİTES HALKA | ENGAGING SLEEVE |
| | | | (389 262 2623) | | | |

SYNCHRONIZER KIT 3rd/4th OLD MODEL

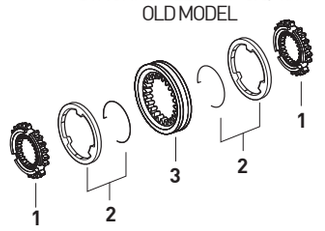


| Fig. | Kacmaz No. | Oem No | Oem Old No | Pcs. | Ürün Tanımı | Description |
|---|---|---|---|---|---|---|
| | K21.06514 | | | Kit | 3./4.VİTES SENK.KİT | SYNCH.KIT 3rd/4th |
| 1 | K21.03027 | 945 262 0534 | (389 262 5034) | 2 | 3./4.VİTES SENKROMENÇ | ENGAGING RING |
| 2 | K21.03016 | 389 262 0737 | (387 262 0937) | 2 | 3./4.VİTES FRENLEME (Mo) | SYNCHRONIZING CONE / Mo |
| 3 | K21.03009 | 945 262 2723 | (945 262 0423) | 1 | 3./4.VİTES HALKA | ENGAGING SLEEVE |
| | | | (389 262 2623) | | | |

SYNCHRONIZER KIT 1st/2nd NEW MODEL

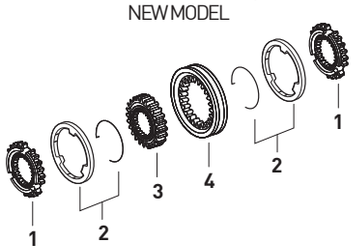


| Fig. | Kacmaz No. | Oem No | Oem Old No | Pcs. | Ürün Tanımı | Description |
|---|---|---|---|---|---|---|
| | K21.06214 | | | Kit | 1./2.VİTES SENK.KİT | SYNCH.KIT 1st/2nd |
| 1 | K21.03160 | 945 262 5534 | | 2 | 1./2.VİTES SENKROMENÇ | ENGAGING RING |
| 2 | K21.03148 | 947 260 1945 | (947 260 4645) | 2 | 1./2.VİTES FRENLEME (Mo) | SYNCHRONIZING CONE / Mo |
| | | | (946 262 6137) | | | |
| 3 | K21.03161 | 389 262 2535 | (945 262 0135) | 1 | 1./2.VİTES YILDIZ DİŞLİ | SYNCHRONIZER HUB |
| 4 | K21.03151 | 945 262 6523 | (930 262 0523) | 1 | 1./2.VİTES HALKA | ENGAGING SLEEVE |



**Original parts names, oem numbers, symbols and descriptions used in this catalogue are for reference purposes only.**

| Fig. | Kacmaz No. | Oem No | Oem Old No | Pcs. | Ürün Tanımı | Description |
|---|---|---|---|---|---|---|
| | K21.06516 | | | Kit | 1./2.VİTES SENK.KİT | SYNCH.KIT 1st/2nd |
| 1 | K21.03160 | 945 262 5534 | | 2 | 1./2.VİTES SENKROMENÇ | ENGAGING RING |
| 2 | K21.03148 | 947 260 1945 | (947 260 4645) | 2 | 1./2.VİTES FRENLEME (Mo) | SYNCHRONIZING CONE / Mo |
| | | | (946 262 6137) | | | |
| 3 | K21.03151 | 945 262 6523 | (930 262 0523) | 1 | 1./2.VİTES HALKA | ENGAGING SLEEVE |

SYNCHRONIZER KIT 1st/2nd
NEW MODEL

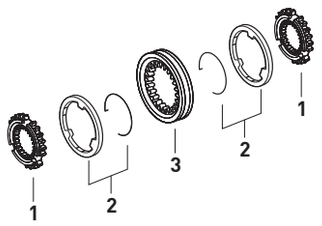


| Fig. | Kacmaz No. | Oem No | Oem Old No | Pcs. | Ürün Tanımı | Description |
|---|---|---|---|---|---|---|
| | K21.06215 | | | Kit | 1./2.VİTES SENK.KİT | SYNCH.KIT 1st/2nd |
| 1 | K21.03025 | 945 262 0434 | (389 262 0034) | 2 | 1.VİTES SENKROMENÇ | ENGAGING RING |
| 2 | K21.03016 | 389 262 0737 | (387 262 0937) | 2 | 1./2.VİTES FRENLEME (Mo) | SYNCHRONIZING CONE / Mo |
| 3 | K21.03161 | 389 262 2535 | (945 262 0135) | 1 | 1./2.VİTES YILDIZ DİŞLİ | SYNCHRONIZER HUB |
| 4 | K21.03009 | 945 262 2723 | (945 262 0423) | 1 | 1./2.VİTES HALKA | ENGAGING SLEEVE |
| | | | (389 262 2623) | | | |

SYNCHRONIZER KIT 1st/2nd
OLD MODEL

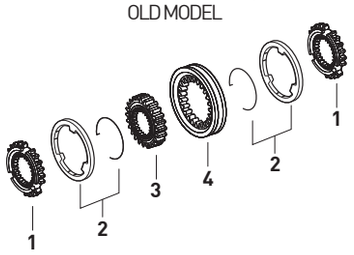


| Fig. | Kacmaz No. | Oem No | Oem Old No | Pcs. | Ürün Tanımı | Description |
|---|---|---|---|---|---|---|
| | K21.06517 | | | Kit | 1./2.VİTES SENK.KİT | SYNCH.KIT 1st/2nd |
| 1 | K21.03025 | 945 262 0434 | (389 262 0034) | 2 | 1./2.VİTES SENKROMENÇ | ENGAGING RING |
| 2 | K21.03016 | 389 262 0737 | (387 262 0937) | 2 | 1./2.VİTES FRENLEME (Mo) | SYNCHRONIZING CONE / Mo |
| 3 | K21.03009 | 945 262 2723 | (945 262 0423) | 1 | 1./2.VİTES HALKA | ENGAGING SLEEVE |
| | | | (389 262 2623) | | | |

SYNCHRONIZER KIT 1st/2nd
OLD MODEL

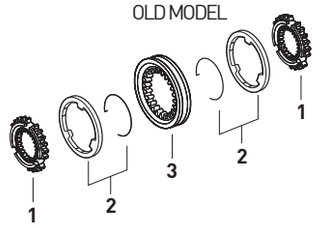


| Fig. | Kacmaz No. | Oem No | Oem Old No | Pcs. | Ürün Tanımı | Description |
|---|---|---|---|---|---|---|
| | K21.06216 | | | Kit | AĞIR SERİ.SENK.KİT | SYNCH.KIT PLANETARY |
| 1 | K21.03037 | 947 260 3036 | (947 260 0836) | 1 | TABLA SENKROMENÇ | FOLLOWER RING |
| 2 | K21.03185 | 947 260 0945 | | 2 | AĞIR SERİ FRENLEME (Mo) | SYNCHRONIZING CONE / Mo |
| 3 | K21.03079 | 389 262 4935 | (389 262 2035) | 1 | A.SERİ YILDIZ DİŞLİ 73 DİŞ | SYNCHRONIZER HUB 73 T. |
| 4 | K21.03033 | 945 262 6923 | (930 262 0623) | 1 | AĞIR SERİ HALKA | ENGAGING SLEEVE |
| 5 | K21.03431 | 960 265 0049 | (947 265 0349) | 2 | A.SERİ HİLAL PABUCU | SLIDING PAD |
| 6 | K21.03186 | 945 262 3834 | | 1 | SERİ SENKROMENÇ | ENGAGING RING |

SYNCHRONIZER KIT PLANETARY
NEW MODEL

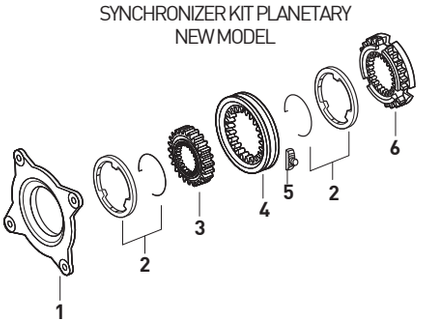


| Fig. | Kacmaz No. | Oem No | Oem Old No | Pcs. | Ürün Tanımı | Description |
|---|---|---|---|---|---|---|
| | K21.06518 | | | Kit | AĞIR SERİ.SENK.KİT | SYNCH.KIT PLANETARY |
| 1 | K21.03037 | 947 260 3036 | (947 260 0836) | 1 | TABLA SENKROMENÇ | FOLLOWER RING |
| 2 | K21.03185 | 947 260 0945 | | 2 | AĞIR SERİ FRENLEME (Mo) | SYNCHRONIZING CONE / Mo |
| 3 | K21.03033 | 945 262 6923 | (930 262 0623) | 1 | AĞIR SERİ HALKA | ENGAGING SLEEVE |
| 4 | K21.03431 | 960 265 0049 | (947 265 0349) | 2 | A.SERİ HİLAL PABUCU | SLIDING PAD |
| 5 | K21.03186 | 945 262 3834 | | 1 | SERİ SENKROMENÇ | ENGAGING RING |

SYNCHRONIZER KIT PLANETARY
NEW MODEL

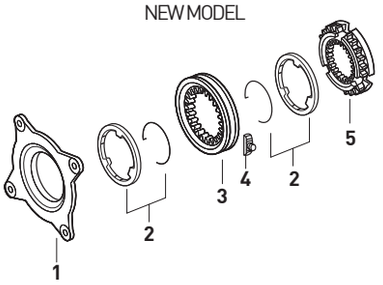




Original parts names, oem numbers, symbols and descriptions used in this catalogue are for reference purposes only.

SYNCHRONIZER KIT PLANETARY
NEW MODEL

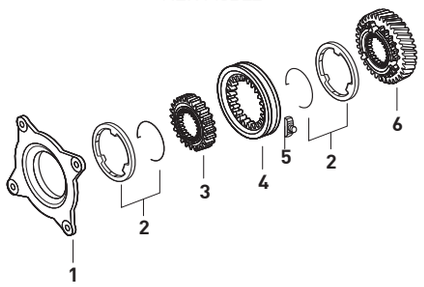


| Fig. | Kacmaz No. | Oem No | Oem Old No | Pcs. | Ürün Tanımı | Description |
|---|---|---|---|---|---|---|
| | K21.06388 | | | Kit | AĞIR SERİ.SENK.KİT | SYNCH.KIT PLANETARY |
| 1 | K21.03037 | 947 260 3036 | (947 260 0836) | 1 | TABLA SENKROMENÇ | FOLLOWER RING |
| 2 | K21.03185 | 947 260 0945 | | 2 | AĞIR SERİ FRENLEME (Mo) | SYNCHRONIZING CONE / Mo |
| 3 | K21.03079 | 389 262 4935 | (389 262 2035) | 1 | A.SERİ YILDIZ DİŞLİ 73 DİŞ | SYNCHRONIZER HUB 73 T. |
| 4 | K21.03033 | 945 262 6923 | (930 262 0623) | 1 | AĞIR SERİ HALKA | ENGAGING SLEEVE |
| 5 | K21.03431 | 960 265 0049 | (947 265 0349) | 2 | A.SERİ HİLAL PABUCU | SLIDING PAD |
| 6 | K21.03188 | 930 264 0320 | | 1 | RETARDER DİŞLİSİ 64 DİŞ | RETARDER GEAR 64 T. |

SYNCHRONIZER KIT PLANETARY
NEW MODEL

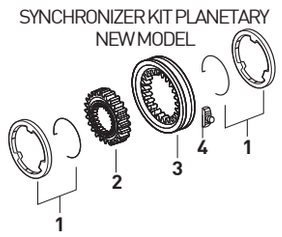


| Fig. | Kacmaz No. | Oem No | Oem Old No | Pcs. | Ürün Tanımı | Description |
|---|---|---|---|---|---|---|
| | K21.06204 | | | Kit | AĞIR SERİ.SENK.KİT | SYNCH.KIT PLANETARY |
| 1 | K21.03185 | 947 260 0945 | | 2 | AĞIR SERİ FRENLEME (Mo) | SYNCHRONIZING CONE / Mo |
| 2 | K21.03079 | 389 262 4935 | (389 262 2035) | 1 | A.SERİ YILDIZ DİŞLİ 73 DİŞ | SYNCHRONIZER HUB 73 T. |
| 3 | K21.03033 | 945 262 6923 | (930 262 0623) | 1 | AĞIR SERİ HALKA | ENGAGING SLEEVE |
| 4 | K21.03431 | 960 265 0049 | (947 265 0349) | 2 | A.SERİ HİLAL PABUCU | SLIDING PAD |

SYNCHRONIZER KIT PLANETARY

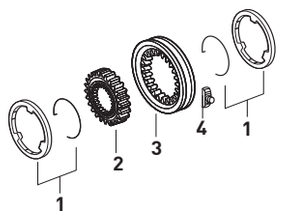


| Fig. | Kacmaz No. | Oem No | Oem Old No | Pcs. | Ürün Tanımı | Description |
|---|---|---|---|---|---|---|
| | K21.06194 | | | Kit | AĞIR SERİ.SENK.KİT | SYNCH.KIT PLANETARY |
| 1 | K21.03017 | 389 262 0537 | (389 262 0037) | 2 | AĞIR SERİ FRENLEME (Mo) | SYNCHRONIZING CONE / Mo |
| 2 | K21.03079 | 389 262 4935 | (389 262 2035) | 1 | A.SERİ YILDIZ DİŞLİ 73 DİŞ | SYNCHRONIZER HUB 73 T. |
| 3 | K21.03028 | 945 262 6623 | (945 262 2623) | 1 | AĞIR SERİ HALKA 73 DİŞ | ENGAGING SLEEVE 73 T. |
| | | | (945 262 0823) | | | |
| 4 | K21.03406 | 389 265 2449 | (389 265 1249) | 2 | A.SERİ HİLAL PABUCU | SLIDING PAD |

SYNCHRONIZER KIT PLANETARY
NEW MODEL

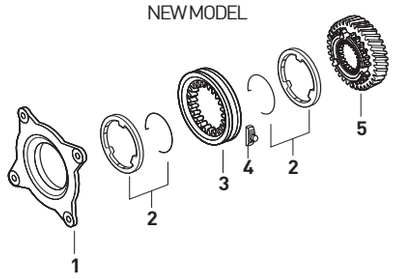


| Fig. | Kacmaz No. | Oem No | Oem Old No | Pcs. | Ürün Tanımı | Description |
|---|---|---|---|---|---|---|
| | K21.06442 | | | Kit | AĞIR SERİ.SENK.KİT | SYNCH.KIT PLANETARY |
| 1 | K21.03037 | 947 260 3036 | (947 260 0836) | 1 | TABLA SENKROMENÇ | FOLLOWER RING |
| 2 | K21.03185 | 947 260 0945 | | 2 | AĞIR SERİ FRENLEME (Mo) | SYNCHRONIZING CONE / Mo |
| 3 | K21.03033 | 945 262 6923 | (930 262 0623) | 1 | AĞIR SERİ HALKA | ENGAGING SLEEVE |
| 4 | K21.03431 | 960 265 0049 | (947 265 0349) | 2 | A.SERİ HİLAL PABUCU | SLIDING PAD |
| 5 | K21.03188 | 930 264 0320 | | 1 | RETARDER DİŞLİSİ 64 DİŞ | RETARDER GEAR 64 T. |

SYNCHRONIZER KIT PLANETARY
OLD TYPE

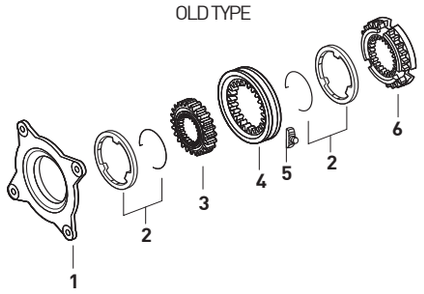


| Fig. | Kacmaz No. | Oem No | Oem Old No | Pcs. | Ürün Tanımı | Description |
|---|---|---|---|---|---|---|
| | K21.06217 | | | Kit | AĞIR SERİ.SENK.KİT | SYNCH.KIT PLANETARY |
| 1 | K21.03018 | 389 260 2036 | | 1 | TABLA SENKROMENÇ | FOLLOWER RING |
| 2 | K21.03017 | 389 262 0537 | (389 262 0037) | 2 | AĞIR SERİ FRENLEME (Mo) | SYNCHRONIZING CONE / Mo |
| 3 | K21.03079 | 389 262 4935 | (389 262 2035) | 1 | A.SERİ YILDIZ DİŞLİ 73 DİŞ | SYNCHRONIZER HUB 73 T. |
| 4 | K21.03028 | 945 262 6623 | (945 262 0823) | 1 | AĞIR SERİ HALKA 73 DİŞ | ENGAGING SLEEVE 73 T. |
| | | | (389 262 1623) | | | |
| 5 | K21.03406 | 389 265 2449 | (389 265 1249) | 2 | A.SERİ HİLAL PABUCU | SLIDING PAD |
| 6 | K21.03187 | 389 262 9234 | (945 262 1234) | 1 | SERİ SENKROMENÇ | ENGAGING RING |

SYNCHRONIZER KIT PLANETARY

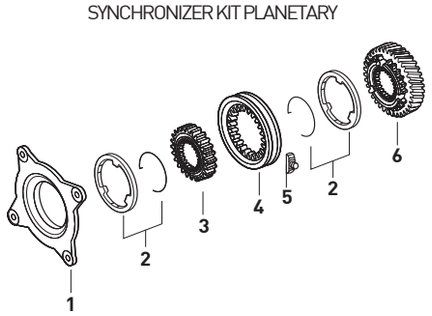


| Fig. | Kacmaz No. | Oem No | Oem Old No | Pcs. | Ürün Tanımı | Description |
|---|---|---|---|---|---|---|
| | K21.06389 | | | Kit | AĞIR SERİ.SENK.KİT | SYNCH.KIT PLANETARY |
| 1 | K21.03018 | 389 260 2036 | | 1 | TABLA SENKROMENÇ | FOLLOWER RING |
| 2 | K21.03017 | 389 262 0537 | (389 262 0037) | 2 | AĞIR SERİ FRENLEME (Mo) | SYNCHRONIZING CONE / Mo |
| 3 | K21.03079 | 389 262 4935 | (389 262 2035) | 1 | A.SERİ YILDIZ DİŞLİ 73 DİŞ | SYNCHRONIZER HUB 73 T. |
| 4 | K21.03028 | 945 262 6623 | (945 262 0823) | 1 | AĞIR SERİ HALKA 73 DİŞ | ENGAGING SLEEVE 73 T. |
| | | | (389 262 1623) | | | |
| 5 | K21.03406 | 389 265 2449 | (389 265 1249) | 2 | A.SERİ HİLAL PABUCU | SLIDING PAD |
| 6 | K21.06050 | 945 264 0130 | (389 264 0730) | 1 | RETARDER DİŞLİSİ | RETARDER GEAR |



**Original parts names, oem numbers, symbols and descriptions used in this catalogue are for reference purposes only.**

| Fig. | Kacmaz No. | Oem No | Oem Old No | Pcs. | Ürün Tanımı | Description |
|---|---|---|---|---|---|---|
| | K21.06520 | | | Kit | AĞIR SERİ.SENK.KİT | SYNCH.KIT PLANETARY |
| 1 | K21.03018 | 389 260 2036 | | 1 | TABLA SENKROMENÇ | FOLLOWER RING |
| 2 | K21.03017 | 389 262 0537 | (389 262 0037) | 2 | AĞIR SERİ FRENLEME (Mo) | SYNCHRONIZING CONE (Mo) |
| 3 | K21.03028 | 945 262 6623 | (945 262 0823) | 1 | AĞIR SERİ HALKA 73 DİŞ | ENGAGING SLEEVE 73 T. |
| | | | (389 262 1623) | | | |
| | | | (389 262 3823) | | | |
| 4 | K21.03406 | 389 265 2449 | (389 265 1249) | 2 | A.SERİ HİLAL PABUCU | SLIDING PAD |
| 5 | K21.03187 | 389 262 9234 | (945 262 1234) | 1 | SERİ SENKROMENÇ | ENGAGING RING |

SYNCHRONIZER KIT PLANETARY
OLD MODEL

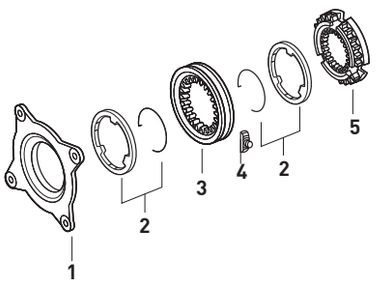


| Fig. | Kacmaz No. | Oem No | Oem Old No | Pcs. | Ürün Tanımı | Description |
|---|---|---|---|---|---|---|
| 1 | K21.06185 | 945 264 0305 | | 1 | PTO MİLİ | INTERM.SHAFT |
| 1 | K21.03496 | 945 264 0805 | (945 264 0505) | 1 | PTO MİLİ | INTERM.SHAFT |
| 1 | K21.03493 | 389 264 0205 | (387 264 0405) | 1 | PTO MİLİ | INTERM.SHAFT |
| 1 | K21.03494 | 387 264 0505 | | 1 | PTO MİLİ | INTERM.SHAFT |
| 2 | | 013 981 0610 | (013 981 0510) | 1 | PTO MİLİ MAS.BİLYA | NEEDLE CAGE |
| 3 | K21.03613 | 004 981 9225 | (004 981 8625) | 1 | PTO MİL BİLYASI | ROLLER BEARING |
| 4 | K21.06964 | 000471 045000 | (003 994 3741) | 1 | PTO MİL SEKMANI | RETAINING RING |
| 5 | | 945 264 0687 | (389 264 0587) | 1 | PTO MİL HALKASI | RING |
| 6 | | 389 264 0223 | | 1 | PTO MİL KOVANI | SLIDING COLLAR |
| 7 | | 000472 080000 | | 1 | PTO SEKMANI | RETAINING RING |
| 8 | | 900055 035301 | | 1 | PTO SEKMANI | RETAINING RING |
| 9 | | 006 981 2525 | (008 981 4125) | 1 | PTO KAPAK BİLYASI | ROLLER BEARING |
| 10 | | 389 264 0780 | (602 264 0280) | 1 | PTO KAPAK CONTASI | GASKET |
| 11 | | 945 264 0611 | | 1 | PTO BAĞ.KAPAĞI | COVER |
| 11 | | 389 264 0311 | | 1 | PTO BAĞ.KAPAĞI | COVER |

P.T.O. (POWER TAKE OFF)

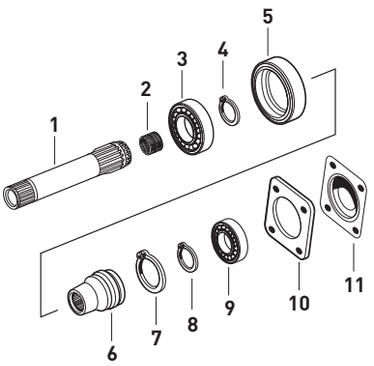


| Fig. | Kacmaz No. | Oem No | Oem Old No | Pcs. | Ürün Tanımı | Description |
|---|---|---|---|---|---|---|
| 1 | K21.03085 | 947 264 0005 | (389 269 0310) | 1 | YAĞ POMPA MİLİ | OIL PUMP SHAFT |
| 1 | K21.03670 | 947 264 0105 | | 1 | YAĞ POMPA MİLİ (RETARDER) | OIL PUMP SHAFT |
| 2 | K21.03511 | 029 997 5748 | | 1 | YAĞ POMPA KAPAK ORİNGİ | O-RING |
| 3 | K21.03558 | 947 264 0287 | | 1 | YAĞ POMPA KAPAĞI | OIL PUMP COVER |
| 4 | K21.03613 | 004 981 9225 | (004 981 8625) | 1 | PTO MİL BİLYASI | ROLLER BEARING |
| 5 | K21.06964 | 000471 045000 | (003 994 3741) | 1 | PTO MİL BİLYA SEKMANI | RETAINING RING |
| 6 | K21.06998 | 017 981 1705 | | 1 | PTO BORU DİŞLİ BİLYASI | ROLLER BEARING |
| 7 | | 947 260 4708 | | 1 | PTO BORU DİŞLİ | GEAR |
| 8 | | 017 981 1805 | | 2 | PTO BORU DİŞLİ BİLYASI | ROLLER BEARING |
| 9 | K21.04334 | 945 264 0006 | | 1 | PTO ARA ADAPTÖR MİLİ | INTERM.SHAFT |
| 10 | | 387 264 3652 | | 2 | BİLYA AYAR RAYNELİ | THRUST WASHER |
| 10 | | 387 264 3752 | | 2 | BİLYA AYAR RAYNELİ | THRUST WASHER |
| 10 | | 387 264 3852 | | 2 | BİLYA AYAR RAYNELİ | THRUST WASHER |
| 11 | | 000988 022010 | | 2 | BİLYA AYAR PULU | THRUST WASHER |
| 12 | K21.04333 | 385 993 5201 | | 1 | YAY | SPRING |
| 13 | | 912009 022100 | | 1 | BİLYA AYAR PUL SEKMANI | RETAINING RING |
| 14 | K21.04332 | 000625 000629 | | 1 | PTO MIL ŞAPKASI | PTO SHAFT CAP |
| 15 | | 016 981 6705 | | 1 | PTO BORU DİŞLİ BİLYASI | ROLLER BEARING |
| 16 | | 947 264 0621 | (947 264 0521) | 1 | PTO BORU DİŞLİ | GEAR |
| 17 | K21.04362 | | | kit | ARA ADAPTÖR MİLİ KOMPLE | INTERM.SHAFT COMP. |
| 18 | K21.06346 | 970 260 0457 | | kit | P.T.O VENTİLİ | VALVE |

P.T.O. (POWER TAKE OFF)

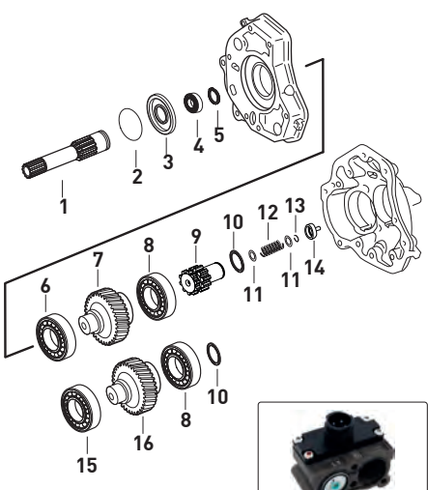


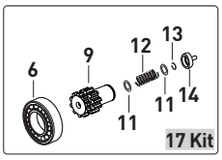




Original parts names, oem numbers, symbols and descriptions used in this catalogue are for reference purposes only.

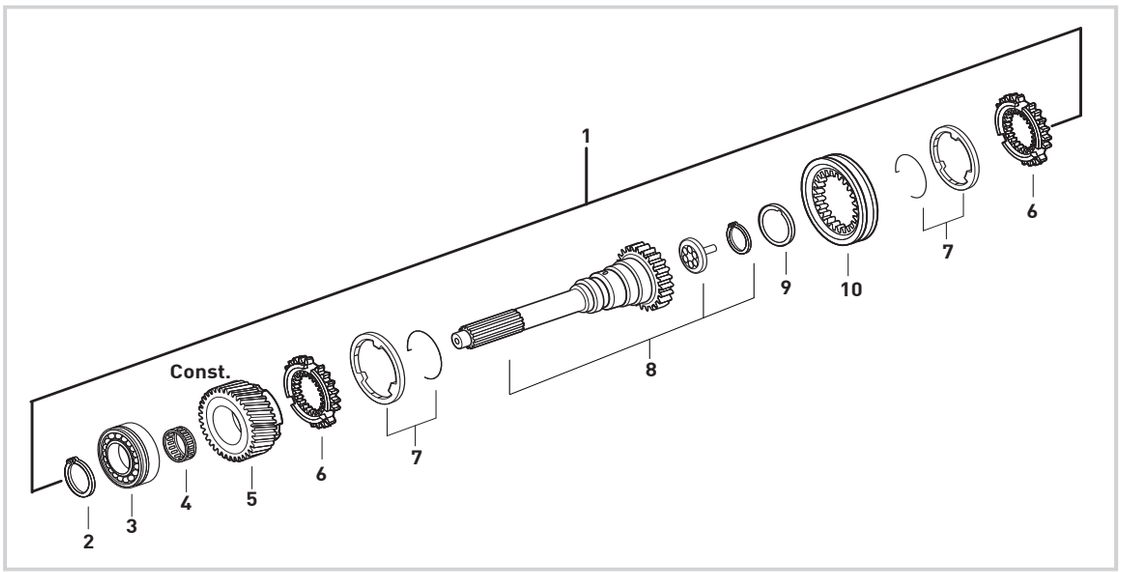


## NEW TYPE

| Fig. | Kacmaz No. | Oem No | Oem Old No | Pcs. | Ürün Tanımı | Description | Sizes |
|---|---|---|---|---|---|---|---|
| 1 | K21.03546 | 945 260 7592 | | Kit | PRİZDİREK KOMPLE | INPUT SHAFT COMPLETE | |
| 2 | K21.04346 | 387 262 8773 | | 1 | PRİZDİREK ÖN BİLYA SEKMANI | RETAINING RING | 3,20mm |
| 3 | K21.03618 | 011 981 1305 | (014 981 9005) | 1 | PRİZDİREK ÖN BİLYA | ROLLER BEARING | 75X140X34,25mm |
| 4 | K21.03818 | 018 981 8210 | (018 981 6410) | 1 | TAKVİYE MASURA BİLYA | NEEDLE CAGE | 84X90X39,5mm |
| 5 | K21.03212 | 945 262 4410 | (945 262 4510) | 1 | TAKVİYE DİŞLİSİ 27 DİŞ | CONSTANT GEAR 27 T. | |
| | | | (945 262 7810) | | | | |
| 6 | K21.03147 | 945 262 7734 | (945 262 3634) | 2 | TAKVİYE SENKROMENÇ | ENGAGING RING | |
| 7 | K21.03136 | 945 260 2245 | (946 262 6337) | 2 | TAKVİYE FRENLEME (Mo) | SYNCHRONIZING CONE / Mo | |
| 8 | K21.03217 | 389 262 7601 | (945 262 3201) | 1 | PRİZDİREK 60 DİŞ | INPUT SHAFT 60 T. | |
| | | | (945 262 1203) | | | | |
| 9 | K21.03513 | 001 262 0262 | (000 262 8662) | 1 | PRİZDİREK ARKA KEÇE | OIL SEAL | 73,5X101X7mm |
| 10 | K21.03137 | 945 262 6823 | (945 262 6423) | 1 | TAKVİYE HALKA | ENGAGING SLEEVE | |

## OLD TYPE

| Fig. | Kacmaz No. | Oem No | Oem Old No | Pcs. | Ürün Tanımı | Description | Sizes |
|---|---|---|---|---|---|---|---|
| 1 | K21.03571 | | | Kit | PRİZDİREK KOMPLE | INPUT SHAFT COMPLETE | |
| 2 | K21.04346 | 387 262 8773 | | 1 | PRİZDİREK ÖN BİLYA SEKMANI | RETAINING RING | 3,20mm |
| 3 | K21.03618 | 011 981 1305 | (014 981 9005) | 1 | PRİZDİREK ÖN BİLYA | ROLLER BEARING | 75X140X34,25mm |
| 4 | K21.03818 | 018 981 8210 | (018 981 6410) | 1 | TAKVİYE MASURA BİLYA | NEEDLE CAGE | 84x90x39,5mm |
| 5 | K21.03212 | 945 262 4410 | (945 262 4510) | 1 | TAKVİYE DİŞLİSİ 27 DİŞ | CONSTANT GEAR 27 T. | |
| | | | (945 262 7810) | | | | |
| 6 | K21.03024 | 389 262 5434 | (945 262 0334) | 2 | TAKVİYE SENKROMENÇ | ENGAGING RING | |
| | | | (945 262 0134) | | | | |
| 7 | K21.03015 | 389 262 0637 | (387 262 0837) | 2 | TAKVİYE FRENLEME (Mo) | SYNCHRONIZING CONE / Mo | |
| 8 | K21.03217 | 389 262 7601 | (945 262 3201) | 1 | PRİZDİREK 60 DİŞ | INPUT SHAFT 60 T. | |
| | | | (945 262 1203) | | | | |
| 9 | K21.03513 | 001 262 0262 | (000 262 8662) | 1 | PRİZDİREK ARKA KEÇE | OIL SEAL | 73,5X101X7mm |
| 10 | K21.03002 | 945 262 2823 | (945 262 0323) | 1 | TAKVİYE HALKA | ENGAGING SLEEVE | |



**Original parts names, oem numbers, symbols and descriptions used in this catalogue are for reference purposes only.**

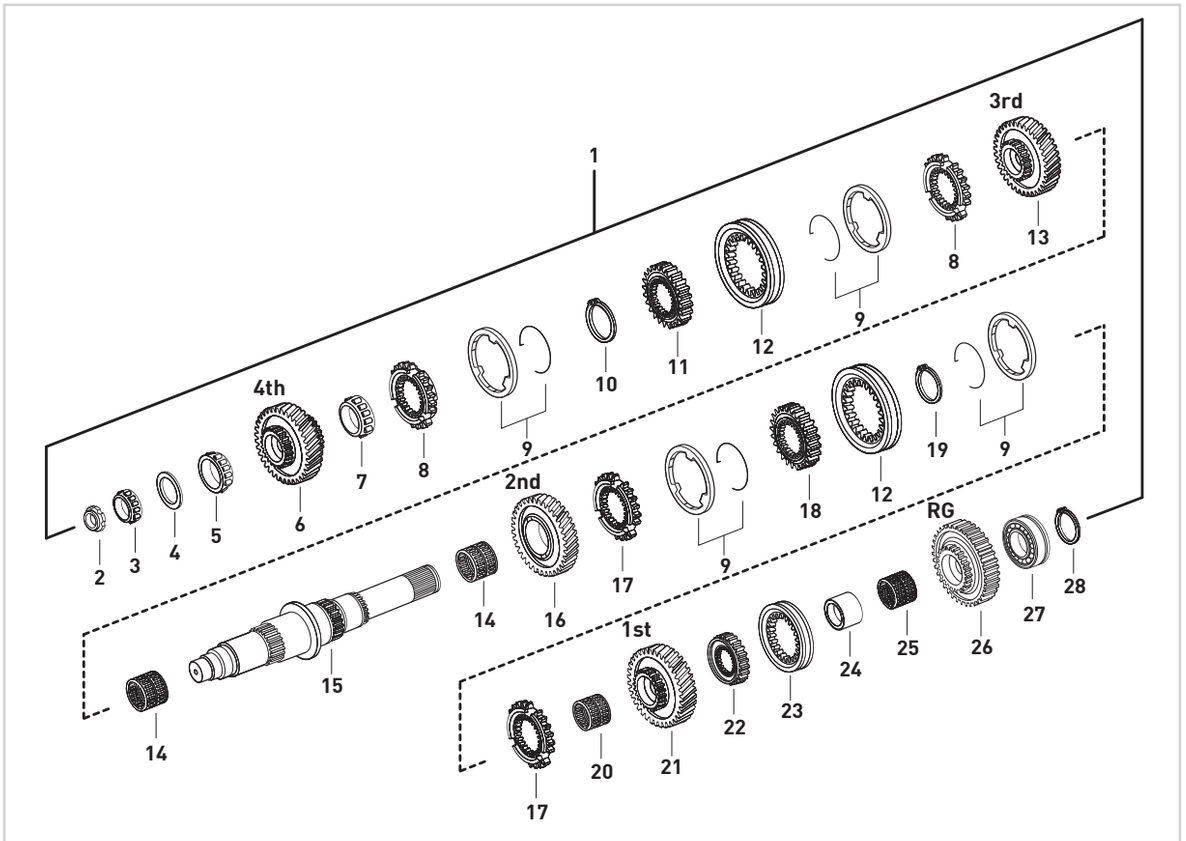


| Fig. | Kacmaz No. | Oem No | Oem Old No | Pcs. | Ürün Tanımı | Description | Sizes |
|---|---|---|---|---|---|---|---|
| 1 | K21.03568 | | | Kit | KAMALI MİL KOMPLE | MAIN SHAFT COMPLETE | |
| 2 | K21.03432 | 945 990 0250 | (945 990 0150) | 1 | KAMALI MİL SOMUNU | NUT | M30X1,5 |
| 3 | K21.03632 | 020 981 5205 | (017 981 1305) | 1 | KAMALI MİL UÇ BİLYA | ROLLER BEARING | 39,69X40,39mm |
| 4 | K21.04095 | 389 262 2155 | | 1 | 3.VİTES ÖN BİLYA AYAR PULU | THRUST WASHER | 1,70mm |
| 5 | K21.03629 | 015 981 7605 | (015 981 2005) | 1 | 4.VİTES DİŞLİSİ ÖN BİLYA | ROLLER BEARING | 50X41mm |
| 6 | K21.03026 | 945 262 8810 | (945 262 9310) | 1 | 4.VİTES DİŞLİSİ 29 DİŞ | GEAR 4th 29 T. | |
| 7 | K21.03631 | 015 981 7705 | (014 981 1605) | 1 | 4.VİTES DİŞLİSİ ARKA BİLYA | ROLLER BEARING | 55X23mm |
| 8 | K21.03027 | 945 262 0534 | (389 262 5034) | 2 | 3./4.VİTES SENKROMENÇ | ENGAGING RING | |
| 9 | K21.03016 | 389 262 0737 | (387 262 0937) | 4 | 1./2./3./4.VİTES FRENLEME (Mo) | SYNCHRONIZING CONE / Mo | |
| 10 | K21.04344 | 387 262 7973 | | 1 | 3./4.VİT.SENK.YIL.DİŞLİ EMN.SEK. | RETAINING RING | 2,70mm |
| 11 | K21.03149 | 389 262 4735 | (389 262 4635) | 1 | 3./4.VİTES YILDIZ DİŞLİ | SYNCHRONIZER HUB | |
| 12 | K21.03009 | 945 262 2723 | (945 262 0423) | 2 | 1./2./3./4.VİTES HALKA | ENGAGING SLEEVE | |
| 13 | K21.03152 | 945 262 3513 | (930 262 0713) | 1 | 3.VİTES DİŞLİSİ 34 DİŞ | GEAR 3rd 34 T. | |
| 14 | K21.03810 | 018 981 6610 | (010 981 5310) | 2 | 2./3.VİTES MASURA BİLYA | NEEDLE CAGE | 85X93X53mm |
| 15 | K21.03156 | 945 262 4505 | | 1 | KAMALI MİL | MAIN SHAFT | |
| 16 | K21.03158 | 389 262 2812 | (389 262 2512) | 1 | 2.VİTES DİŞLİSİ 39 DİŞ | GEAR 2nd 39 T. | |
| 17 | K21.03025 | 945 262 0434 | (389 262 0034) | 2 | 1./2.VİTES SENKROMENÇ | ENGAGING RING | |
| 18 | K21.03161 | 389 262 2535 | (945 262 0135) | 1 | 1./2.VİTES YILDIZ DİŞLİ | SYNCHRONIZER HUB | |
| 19 | K21.04342 | 007 994 0041 | (387 262 2273) | 1 | 1./2.VİT.SENK.YIL.DİŞLİ EMN.SEK. | RETAINING RING | 2,40mm |
| 20 | K21.03839 | 945 981 0010 | (018 981 8110) | 1 | 1.VİTES MASURA BİLYA | NEEDLE CAGE | 75X83X48mm |
| 21 | K21.03162 | 946 262 0811 | (389 262 2711) | 1 | 1.VİTES DİŞLİSİ 44 DİŞ | GEAR 1st 44 T. | |
| 22 | K21.03163 | 945 262 3835 | | 1 | GERİ VİTES YILDIZ DİŞLİ | SYNCHRONIZER HUB | |
| 23 | K21.03061 | 389 262 1823 | (389 262 0923) | 1 | GERİ VİTES HALKASI | ENGAGING SLEEVE | |
| 24 | K21.03112 | 389 262 2550 | (389 262 1650) | 1 | GERİ VİTES MASURA BİLYA ÇANAĞI | BEARING RACE | |
| 25 | K21.03803 | 009 981 1510 | (017 981 7810) | 1 | GERİ VİTES MASURA BİLYA | NEEDLE CAGE | 78X86X35mm |
| 26 | K21.03167 | 945 262 4433 | | 1 | GERİ VİTES DİŞLİSİ 40 DİŞ | REVERSE GEAR 40 T. | |
| 27 | K21.03623 | 014 981 6105 | (016 981 1305) | 1 | KAMALI MİL ARKA BİLYA | ROLLER BEARING | 60X130X33,2mm |
| 28 | K21.04331 | 007 994 1841 | (006 994 9941) | 1 | KAMALI MİL ARKA BİLYA SEKMANI | RETAINING RING | 2,50mm |



Original parts names, oem numbers, symbols and descriptions used in this catalogue are for reference purposes only.

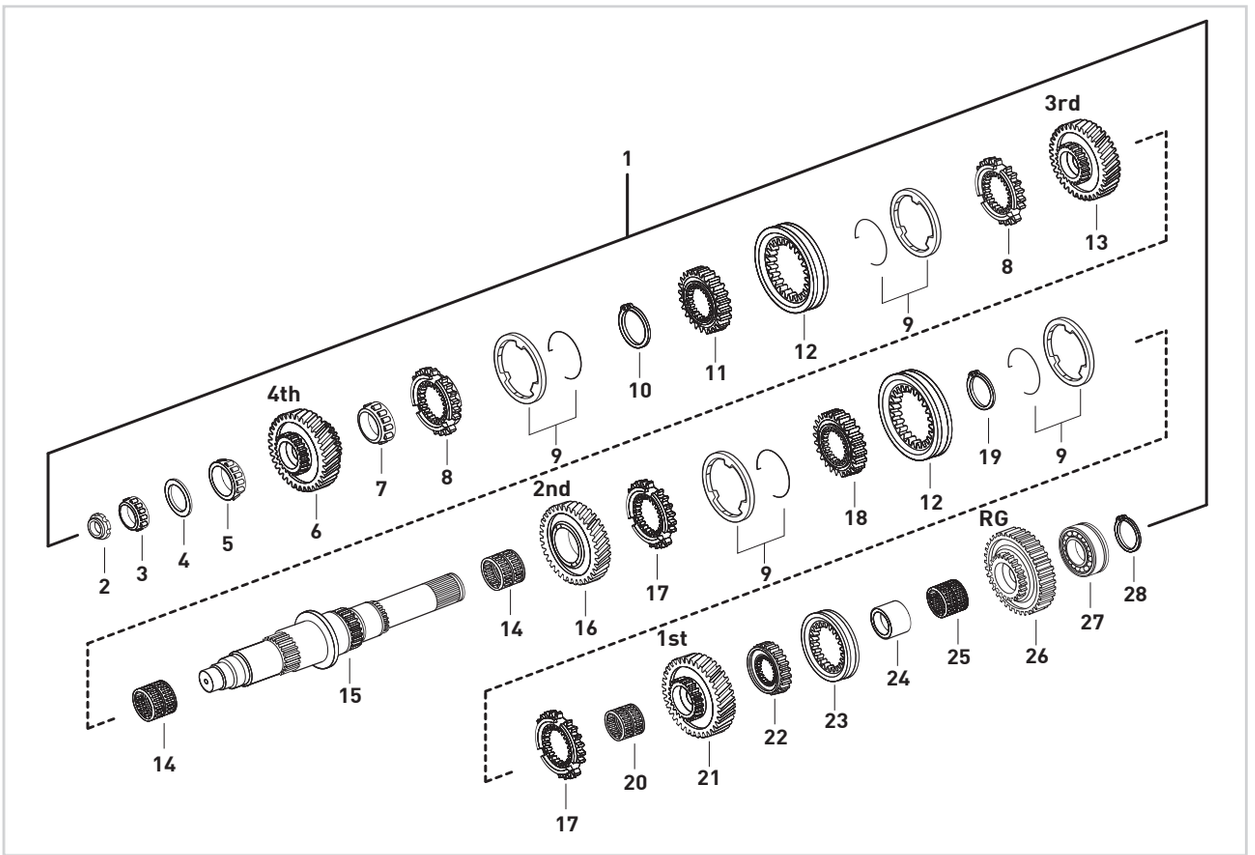


| Fig. | Kacmaz No. | Oem No | Oem Old No | Pcs. | Ürün Tanımı | Description | Sizes |
|---|---|---|---|---|---|---|---|
| 1 | K21.03549 | 947 260 6722 | | Kit | KAMALI MİL KOMPLE | MAIN SHAFT COMPLETE | |
| 2 | K21.03432 | 945 990 0250 | (945 990 0150) | 1 | KAMALI MİL SOMUNU | NUT | M30X1,5 |
| 3 | K21.03632 | 020 981 5205 | (017 981 1305) | 1 | KAMALI MİL UÇ BİLYA | ROLLER BEARING | 39,69X40,39mm |
| 4 | K21.94095 | | | 1 | 3.VİTES ÖN BİLYA AYAR PULU | THRUST WASHER | 1,70mm |
| 5 | K21.03629 | 015 981 7605 | (015 981 2005) | 1 | 4.VİTES DİŞLİSİ ÖN BİLYA | ROLLER BEARING | 50X41mm |
| 6 | K21.03026 | 945 262 8810 | (945 262 9310) | 1 | 4.VİTES DİŞLİSİ 29 DİŞ | GEAR 4th 29 T. | |
| 7 | K21.03631 | 015 981 7705 | (014 981 1605) | 1 | 4.VİTES DİŞLİSİ ARKA BİLYA | ROLLER BEARING | 55X23mm |
| 8 | K21.03146 | 945 262 8234 | (945 262 5434) | 2 | 3./4.VİTES SENKROMENÇ | ENGAGING RING | |
| 9 | K21.03148 | 947 260 1945 | (947 260 4645) | 4 | 1./2./3./4.VİTES FRENLEME (Mo) | SYNCHRONIZING CONE / Mo | |
| 10 | K21.04344 | 387 262 7973 | | 1 | 3./4.VİT.SENK.YIL.DİŞLİ EMN.SEK. | RETAINING RING | 2,70mm |
| 11 | K21.03149 | 389 262 4735 | (389 262 4635) | 1 | 3./4.VİTES YILDIZ DİŞLİ | SYNCHRONIZER HUB | |
| 12 | K21.03151 | 945 262 6523 | (930 262 0523) | 2 | 1./2./3./4.VİTES HALKA | ENGAGING SLEEVE | |
| 13 | K21.03152 | 945 262 3513 | (930 262 0713) | 1 | 3.VİTES DİŞLİSİ 34 DİŞ | GEAR 3rd 34 T. | |
| 14 | K21.03810 | 018 981 6610 | (010 981 5310) | 2 | 2./3.VİTES MASURA BİLYA | NEEDLE CAGE | 85X93X53mm |
| 15 | K21.03156 | 945 262 4505 | | 1 | KAMALI MİL | MAIN SHAFT | |
| 16 | K21.03158 | 389 262 2812 | (389 262 2512) | 1 | 2.VİTES DİŞLİSİ 39 DİŞ | GEAR 2nd 39 T. | |
| 17 | K21.03160 | 945 262 5534 | | 2 | 1./2.VİTES SENKROMENÇ | ENGAGING RING | |
| 18 | K21.03161 | 389 262 2535 | (945 262 0135) | 1 | 1./2.VİTES YILDIZ DİŞLİ | SYNCHRONIZER HUB | |
| 19 | K21.04343 | 387 262 2073 | | 1 | 1./2.VİT.SENK.YIL.DİŞLİ EMN.SEK. | RETAINING RING | 2,40mm |
| 20 | K21.03839 | 945 981 0010 | (018 981 8110) | 1 | 1.VİTES MASURA BİLYA | NEEDLE CAGE | 75X83X48mm |
| 21 | K21.03162 | 946 262 0811 | (389 262 2711) | 1 | 1.VİTES DİŞLİSİ 44 DİŞ | GEAR 1st 44 T. | |
| 22 | K21.03163 | 945 262 3835 | | 1 | GERİ VİTES YILDIZ DİŞLİ | SYNCHRONIZER HUB | |
| 23 | K21.03061 | 389 262 1823 | (389 262 0923) | 1 | GERİ VİTES HALKASI | ENGAGING SLEEVE | |
| 24 | K21.03112 | 389 262 2550 | (389 262 1650) | 1 | GERİ VİTES MASURA BİLYA ÇANAĞI | BEARING RACE | |
| 25 | K21.03803 | 009 981 1510 | (017 981 7810) | 1 | GERİ VİTES MASURA BİLYA | NEEDLE CAGE | 78X86X35mm |
| 26 | K21.03167 | 945 262 4433 | | 1 | GERİ VİTES DİŞLİSİ 40 DİŞ | REVERSE GEAR 40 T. | |
| 27 | K21.03623 | 014 981 6105 | (016 981 1305) | 1 | KAMALI MİL ARKA BİLYA | ROLLER BEARING | 60X130X33,2mm |
| 28 | K21.04331 | 007 994 1841 | (006 994 9941) | 1 | KAMALI MİL ARKA BİLYA SEKMANI | RETAINING RING | 2,50 mm |

**Original parts names, oem numbers, symbols and descriptions used in this catalogue are for reference purposes only.**

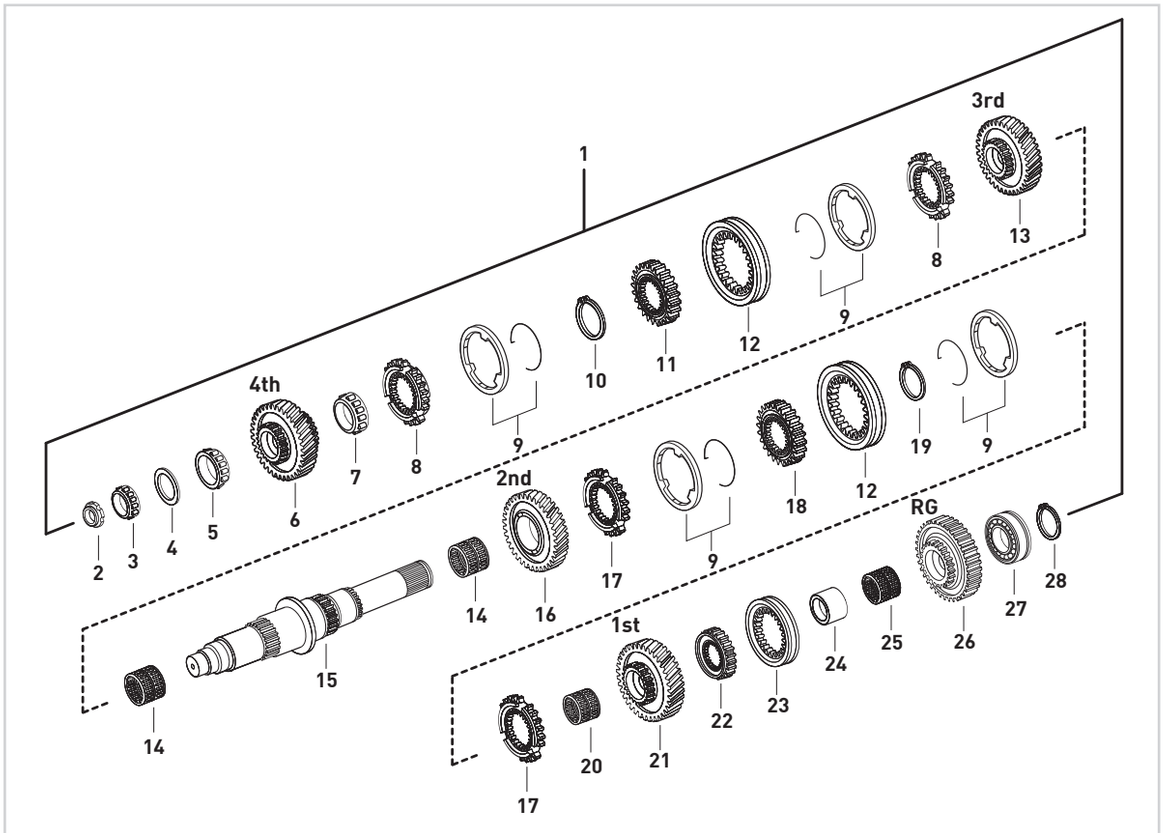


| Fig. | Kacmaz No. | Oem No | Oem Old No | Pcs. | Ürün Tanımı | Description | Sizes |
|---|---|---|---|---|---|---|---|
| 1 | K21.06378 | | | Kit | KAMALI MİL KOMPLE | MAIN SHAFT COMPLETE | |
| 2 | K21.03432 | 945 990 0250 | (945 990 0150) | 1 | KAMALI MİL SOMUNU | NUT | M30X1,5 |
| 3 | K21.03632 | 020 981 5205 | (017 981 1305) | 1 | KAMALI MİL UÇ BİLYA | ROLLER BEARING | 36,69X40,39mm |
| 4 | K21.04095 | 389 262 2155 | | 1 | 3.VİTES ÖN BİLYA AYAR PULU | THRUST WASHER | 1,70mm |
| 5 | K21.03629 | 015 981 7605 | (015 981 2005) | 1 | 4.VİTES DİŞLİSİ ÖN BİLYA | ROLLER BEARING | 50X41mm |
| 6 | K21.03026 | 945 262 8810 | (945 262 9310) | 1 | 4.VİTES DİŞLİSİ 29 DİŞ | GEAR 4th 29 T. | |
| 7 | K21.03631 | 015 981 7705 | (014 981 1605) | 1 | 4.VİTES DİŞLİSİ ARKA BİLYA | ROLLER BEARING | 55X23mm |
| 8 | K21.03146 | 945 262 8234 | (945 262 5434) | 2 | 3./4.VİTES SENKROMENÇ | ENGAGING RING | |
| 9 | K21.03148 | 947 260 1945 | (947 260 4645) | 4 | 1./2./3./4.VİTES FRENLEME (Mo) | SYNCHRONIZING CONE / Mo | |
| 10 | K21.04344 | 387 262 7973 | | 1 | 3./4.VİT.SENK.YIL.DİŞLİ EMN.SEK. | RETAINING RING | 2,70mm |
| 11 | K21.03149 | 389 262 4735 | (389 262 4635) | 1 | 3./4.VİTES YILDIZ DİŞLİ | SYNCHRONIZER HUB | |
| 12 | K21.03151 | 945 262 6523 | (930 262 0523) | 2 | 1./2./3./4.VİTES HALKA | ENGAGING SLEEVE | |
| 13 | K21.03152 | 945 262 3513 | (930 262 0713) | 1 | 3.VİTES DİŞLİSİ 34 DİŞ | GEAR 3rd 34 T. | |
| 14 | K21.03810 | 018 981 6610 | (010 981 5310) | 2 | 2./3.VİTES MASURA BİLYA | NEEDLE CAGE | 85X93X53mm |
| 15 | K21.06042 | 930 262 1205 | (930 262 2405) | 1 | KAMALI MİL | MAIN SHAFT | |
| 16 | K21.03158 | 389 262 2812 | (389 262 2512) | 1 | 2.VİTES DİŞLİSİ 39 DİŞ | GEAR 2nd 39 T. | |
| 17 | K21.03160 | 945 262 5534 | | 2 | 1./2.VİTES SENKROMENÇ | ENGAGING RING | |
| 18 | K21.03161 | 389 262 2535 | (945 262 0135) | 1 | 1./2.VİTES YILDIZ DİŞLİ | SYNCHRONIZER HUB | |
| 19 | K21.04342 | 007 994 0041 | (387 262 2273) | 1 | 1./2.VİT.SENK.YIL.DİŞLİ EMN.SEK. | RETAINING RING | 2,40mm |
| 20 | K21.03839 | 945 981 0010 | (018 981 8110) | 1 | 1.VİTES MASURA BİLYA | NEEDLE CAGE | 75X83X48mm |
| 21 | K21.03162 | 946 262 0811 | (389 262 2711) | 1 | 1.VİTES DİŞLİSİ 44 DİŞ | GEAR 1st 44 T. | |
| 22 | K21.06995 | 945 262 3935 | | 1 | GERİ VİTES YILDIZ DİŞLİ | SYNCHRONIZER HUB | |
| 23 | K21.03061 | 389 262 1823 | (389 262 0923) | 1 | GERİ VİTES HALKASI | ENGAGING SLEEVE | |
| 24 | K21.03065 | 389 262 0150 | | 1 | GERİ VİTES MASURA BİLYA ÇANAĞI | BEARING RACE | |
| 25 | K21.03813 | 013 981 1810 | (013 981 2610) | 1 | GERİ VİTES MASURA BİLYA | NEEDLE CAGE | 78X86X33mm |
| 26 | K21.06044 | 960 262 0033 | | 1 | GERİ VİTES DİŞLİSİ 40 DİŞ | REVERSE GEAR 40 T. | |
| 27 | K21.03661 | 002 981 8181 | | 1 | KAMALI MİL ARKA BİLYA | ROLLER BEARING | 60X130X35,2mm |
| 28 | K21.04331 | 007 994 1841 | (006 994 9941) | 1 | KAMALI MİL ARKA BİLYA SEKMANI | RETAINING RING | 2,50mm |



Original parts names, oem numbers, symbols and descriptions used in this catalogue are for reference purposes only.

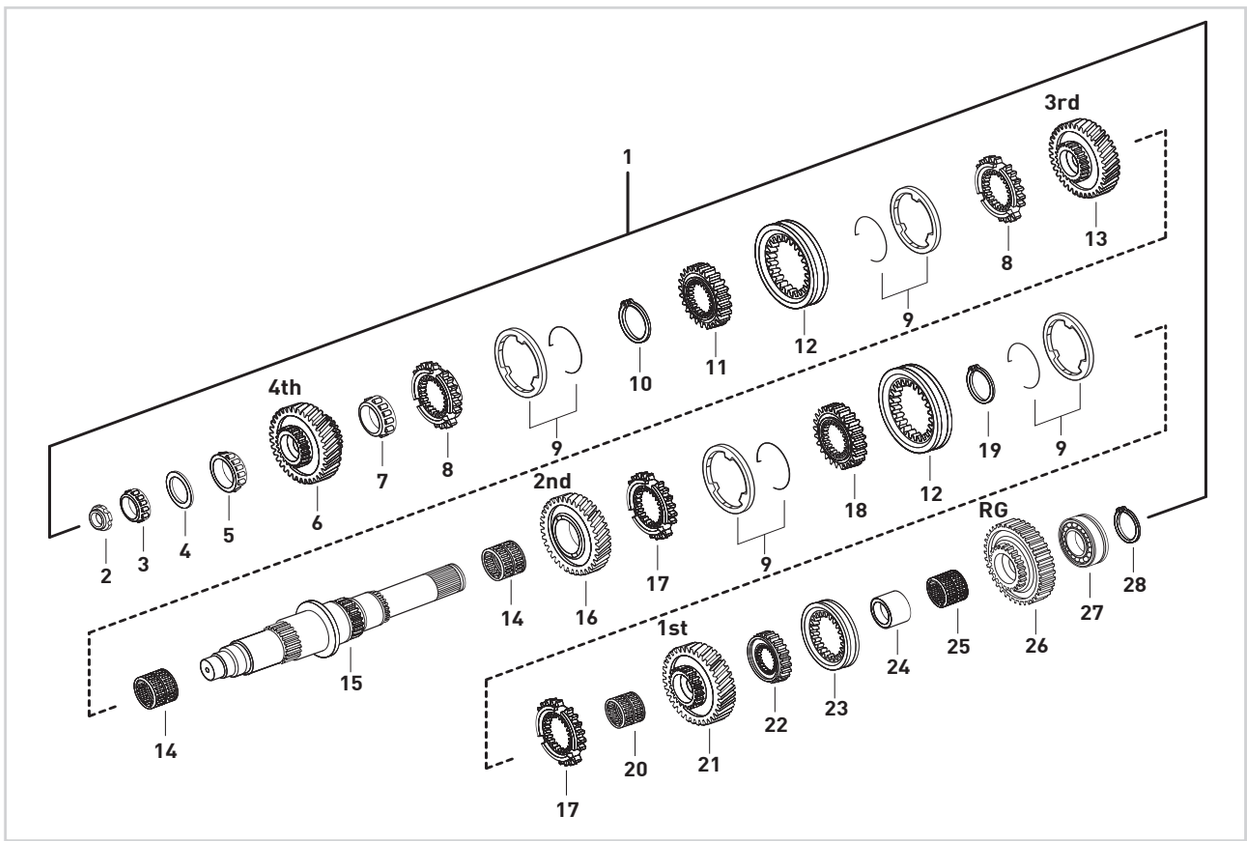


| Fig. | Kacmaz No. | Oem No | Oem Old No | Pcs. | Ürün Tanımı | Description | Sizes |
|---|---|---|---|---|---|---|---|
| 1 | K21.03698 | | | Kit | KAMALI MİL KOMPLE | MAIN SHAFT COMPLETE | |
| 2 | K21.03432 | 945 990 0250 | (945 990 0150) | 1 | KAMALI MİL SOMUNU | NUT | M30X1,5 |
| 3 | K21.03632 | 020 981 5205 | (017 981 1305) | 1 | KAMALI MİL UÇ BİLYA | ROLLER BEARING | 39,69X40,39mm |
| 4 | K21.04095 | 389 262 2155 | | 1 | 3.VİT.ÖNBİLYA AYAR PULU | THRUST WASHER | 1,73mm |
| 5 | K21.03629 | 015 981 7605 | (015 981 2005) | 1 | 4.VİTES DİŞLİSİ ÖN BİLYA | ROLLER BEARING | 50X41mm |
| 6 | K21.03026 | 945 262 8810 | (945 262 9310) | 1 | 4.VİTES DİŞLİSİ 29 DİŞ | GEAR 4th 29 T. | |
| 7 | K21.03631 | 015 981 7705 | (014 981 1605) | 1 | 4.VİTES DİŞLİSİ ARKA BİLYA | ROLLER BEARING | 55X23mm |
| 8 | K21.03146 | 945 262 8234 | (945 262 5434) | 2 | 3./4.VİTES SENKROMENÇ | ENGAGING RING | |
| 9 | K21.03148 | 947 260 1945 | (947 260 4645) | 4 | 1./2./3./4.VİTES FRENLEME (Mo) | SYNCHRONIZING CONE / Mo | |
| 10 | K21.04344 | 387 262 7973 | | 1 | 3./4.VİT.SENK.YIL.DİŞLİ EMN.SEK. | RETAINING RING | 2,70mm |
| 11 | K21.03149 | 389 262 4735 | (389 262 4635) | 1 | 3./4.VİTES YILDIZ DİŞLİ | SYNCHRONIZER HUB | |
| 12 | K21.03151 | 945 262 6523 | (930 262 0523) | 2 | 1./2./3./4.VİTES HALKA | ENGAGING SLEEVE | |
| 13 | K21.03152 | 945 262 3513 | (930 262 0713) | 1 | 3.VİTES DİŞLİSİ 34 DİŞ | GEAR 3rd 34 T. | |
| 14 | K21.03810 | 018 981 6610 | (010 981 5310) | 2 | 2./3.VİTES MASURA BİLYA | NEEDLE CAGE | 85X93X53mm |
| 15 | K21.06042 | 930 262 1205 | (930 262 2405) | 1 | KAMALI MİL | MAIN SHAFT | |
| 16 | K21.03158 | 389 262 2812 | (389 262 2512) | 1 | 2.VİTES DİŞLİSİ 39 DİŞ | GEAR 2nd 39 T. | |
| 17 | K21.03160 | 945 262 5534 | | 2 | 1./2.VİTES SENKROMENÇ | ENGAGING RING | |
| 18 | K21.03161 | 389 262 2535 | (945 262 0135) | 1 | 1./2.VİTES YILDIZ DİŞLİ | SYNCHRONIZER HUB | |
| 19 | K21.04343 | 387 262 2073 | | 1 | 1./2.VİT.SENK.YIL.DİŞLİ EMN.SEK. | RETAINING RING | 2,40mm |
| 20 | K21.03839 | 945 981 0010 | (018 981 8110) | 1 | 1.VİTES MASURA BİLYA | NEEDLE CAGE | 75X83X48mm |
| 21 | K21.03162 | 946 262 0811 | (389 262 2711) | 1 | 1.VİTES DİŞLİSİ 44 DİŞ | GEAR 1st 44 T. | |
| 22 | K21.03059 | 389 262 0135 | | 1 | GERİ VİTES YILDIZ DİŞLİ | SYNCHRONIZER HUB | |
| 23 | K21.03060 | 389 262 1723 | (389 262 0023) | 1 | GERİ VİTES HALKASI | ENGAGING SLEEVE | |
| 24 | K21.03065 | 389 262 0150 | | 1 | GERİ VİTES MASURA BİLYA ÇANAĞI | BEARING RACE | |
| 25 | K21.03813 | 013 981 1810 | (013 981 2610) | 1 | GERİ VİTES MASURA BİLYA | NEEDLE CAGE | 78X86X33mm |
| 26 | K21.06045 | 930 262 0233 | | 1 | GERİ VİTES DİŞLİSİ 40 DİŞ | REVERSE GEAR 40 T. | |
| 27 | K21.03661 | 002 981 8181 | | 1 | KAMALI MİL ARKA BİLYA | ROLLER BEARING | 60X130X35,2mm |
| 28 | K21.04331 | 007 994 1841 | (006 994 9941) | 1 | KAMALI MİL ARKA BİLYA SEKMANI | RETAINING RING | 2,50mm |



**Original parts names, oem numbers, symbols and descriptions used in this catalogue are for reference purposes only.**

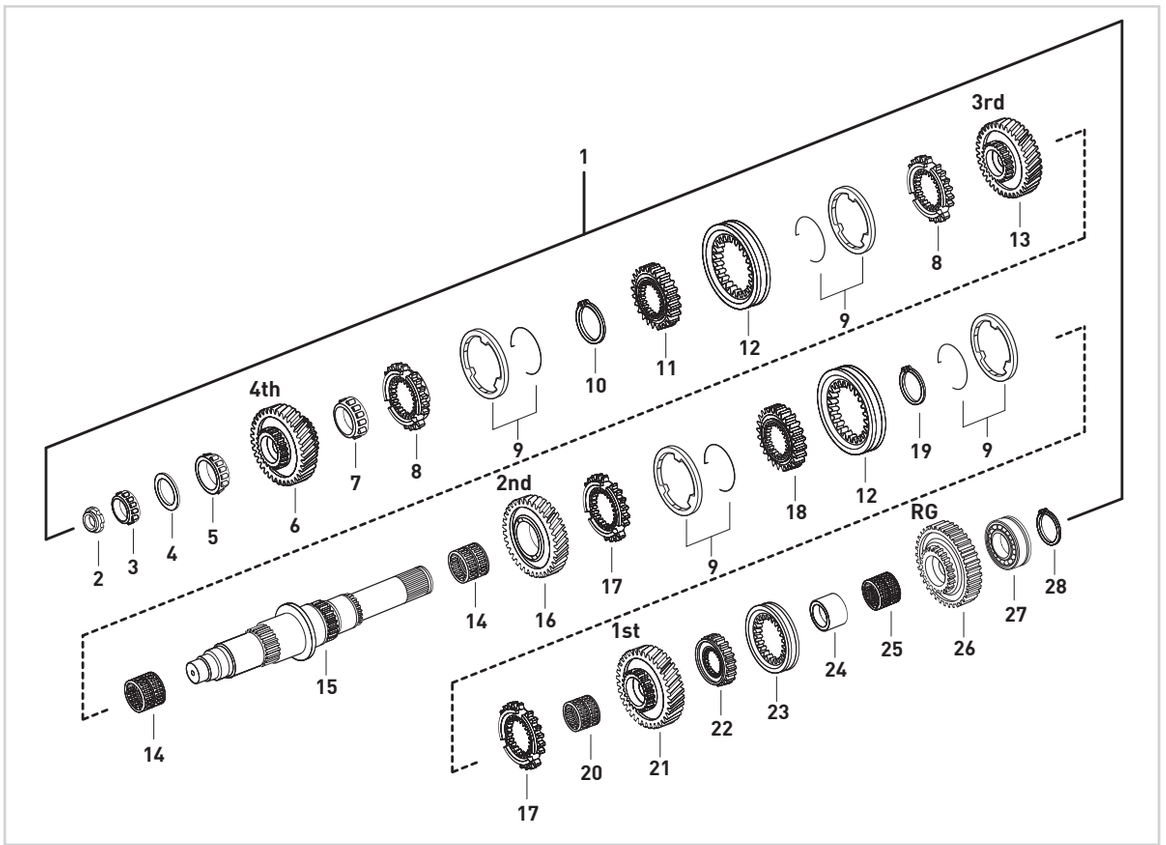


| Fig. | Kacmaz No. | Oem No | Oem Old No | Pcs. | Ürün Tanımı | Description | Sizes |
|---|---|---|---|---|---|---|---|
| 1 | K21.03697 | | | Kit | KAMALI MİL KOMPLE | MAIN SHAFT COMPLETE | |
| 2 | K21.03432 | 945 990 0250 | (945 990 0150) | 1 | KAMALI MİL SOMUNU | NUT | M30X1,5 |
| 3 | K21.03632 | 020 981 5205 | (017 981 1305) | 1 | KAMALI MİL UÇ BİLYA | ROLLER BEARING | 39,69X40,39mm |
| 4 | K21.04095 | 389 262 2155 | | 1 | 3.VİTES ÖN BİLYA AYAR PULU | THRUST WASHER | 1,73mm |
| 5 | K21.03629 | 015 981 7605 | (015 981 2005) | 1 | 4.VİTES DİŞLİSİ ÖN BİLYA | ROLLER BEARING | 50X41mm |
| 6 | K21.03026 | 945 262 8810 | (945 262 9310) | 1 | 4.VİTES DİŞLİSİ 29 DİŞ | GEAR 4th 29 T. | |
| 7 | K21.03631 | 015 981 7705 | (014 981 1605) | 1 | 4.VİTES DİŞLİSİ ARKA BİLYA | ROLLER BEARING | 55X23mm |
| 8 | K21.03146 | 945 262 8234 | (945 262 5434) | 2 | 3./4.VİTES SENKROMENÇ | ENGAGING RING | |
| 9 | K21.03148 | 947 260 1945 | (947 260 4645) | 4 | 1./2./3./4.VİTES FRENLEME (Mo) | SYNCHRONIZING CONE / Mo | |
| 10 | K21.04344 | 387 262 7973 | | 1 | 3./4.VİT.SENK.YIL.DİŞLİ EMN.SEK. | RETAINING RING | 2,70mm |
| 11 | K21.03149 | 389 262 4735 | (389 262 4635) | 1 | 3./4.VİTES YILDIZ DİŞLİ | SYNCHRONIZER HUB | |
| 12 | K21.03151 | 945 262 6523 | (930 262 0523) | 2 | 1./2./3./4.VİTES HALKA | ENGAGING SLEEVE | |
| 13 | K21.03152 | 945 262 3513 | (930 262 0713) | 1 | 3.VİTES DİŞLİSİ 34 DİŞ | GEAR 3rd 34 T. | |
| 14 | K21.03810 | 018 981 6610 | (010 981 5310) | 2 | 2./3.VİTES MASURA BİLYA | NEEDLE CAGE | 85X93X53mm |
| 15 | K21.03156 | 945 262 4505 | | 1 | KAMALI MİL | MAIN SHAFT | |
| 16 | K21.03158 | 389 262 2812 | (389 262 2512) | 1 | 2.VİTES DİŞLİSİ 39 DİŞ | GEAR 2nd 39 T. | |
| 17 | K21.03160 | 945 262 5534 | | 2 | 1./2.VİTES SENKROMENÇ | ENGAGING RING | |
| 18 | K21.03161 | 389 262 2535 | (945 262 0135) | 1 | 1./2.VİTES YILDIZ DİŞLİ | SYNCHRONIZER HUB | |
| 19 | K21.04342 | 007 994 0041 | (387 262 2273) | 1 | 1./2.VİT.SENK.YIL.DİŞLİ EMN.SEK. | RETAINING RING | 2,50mm |
| 20 | K21.03839 | 945 981 0010 | (018 981 8110) | 1 | 1.VİTES MASURA BİLYA | NEEDLE CAGE | 75X83X48mm |
| 21 | K21.03162 | 946 262 0811 | (389 262 2711) | 1 | 1.VİTES DİŞLİSİ 44 DİŞ | GEAR 1st 44 T. | |
| 22 | K21.03059 | 389 262 0135 | | 1 | GERİ VİTES YILDIZ DİŞLİ | SYNCHRONIZER HUB | |
| 23 | K21.03060 | 389 262 1723 | (389 262 0023) | 1 | GERİ VİTES HALKASI | ENGAGING SLEEVE | |
| 24 | K21.03112 | 389 262 2550 | (389 262 1650) | 1 | GERİ VİTES MASURA BİLYA ÇANAĞI | BEARING RACE | |
| 25 | K21.03803 | 009 981 1510 | (017 981 7810) | 1 | GERİ VİTES MASURA BİLYA | NEEDLE CAGE | 78X86X35mm |
| 26 | K21.03165 | 945 262 3233 | (389 262 2033) | 1 | GERİ VİTES DİŞLİSİ 40 DİŞ | REVERSE GEAR 40 T. | |
| 27 | K21.03623 | 014 981 6105 | (016 981 1305) | 1 | KAMALI MİL ARKA BİLYA | ROLLER BEARING | 60X130X33,2mm |
| 28 | K21.04331 | 007 994 1841 | (006 994 9941) | 1 | KAMALI MİL ARKA BİLYA SEKMANI | RETAINING RING | 2,50mm |



**Original parts names, oem numbers, symbols and descriptions used in this catalogue are for reference purposes only.**

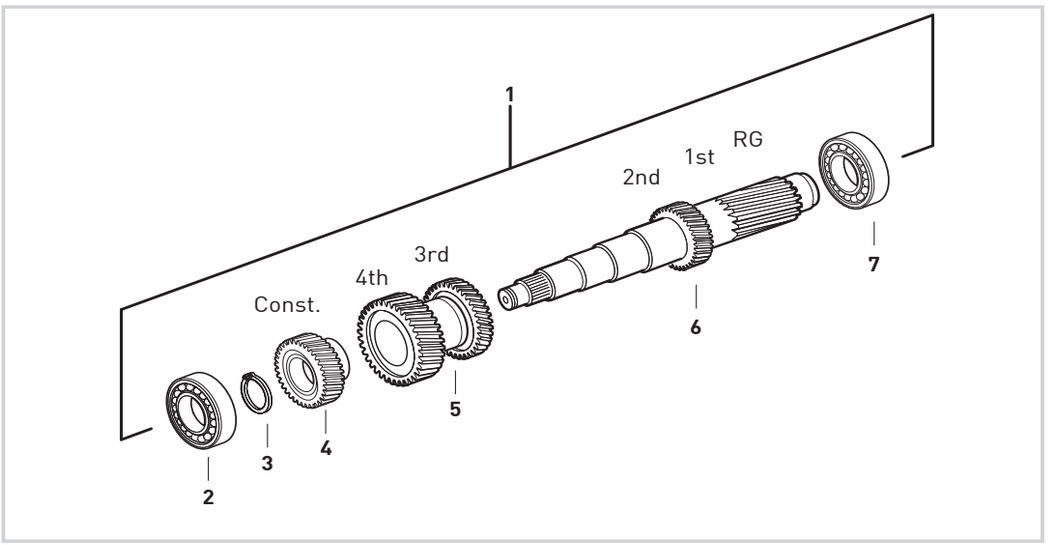


| Fig. | Kacmaz No. | Oem No | Oem Old No | Pcs. | Ürün Tanımı | Description | Sizes |
|---|---|---|---|---|---|---|---|
| 1 | K21.03548 | 945 260 7124 | | Kit | GRUP MİLİ KOMPLE | COUNTER SHAFT COMPLETE | |
| 2 | K21.03606 | 015 981 9005 | (014 981 1405) | 1 | GRUP MİLİ ÖN BİLYA | ROLLER BEARING | 50,8X100X35mm |
| 3 | K21.06425 | 389 994 0041 | | 1 | GRUP MİLİ ÖN BİLYA SEKMANI | RETAINING RING | 2,50mm |
| 4 | K21.03036 | 945 263 1110 | (945 263 0210) | 1 | TAKVİYE DİŞLİ KARŞILIĞI 38 DİŞ | CONSTANT GEAR 38 T. | |
| 5 | K21.03171 | 945 263 0213 | (945 263 2913) | 1 | 3./4.VİTES DİŞLİ KARŞILIĞI 27/34 DİŞ | DOUBLE GEAR 3rd/4th 27/34 T. | |
| | | | (945 263 1013) | | | | |
| | | | (945 263 1513) | | | | |
| | | | (945 263 1413) | | | | |
| | | | (945 263 0513) | | | | |
| | | | (945 263 7113) | | | | |
| | | | (945 263 7013) | | | | |
| | | | (945 263 6913) | | | | |
| 6 | K21.03175 | 945 263 2902 | (945 263 0902) | 1 | GRUP MİLİ 16/21 DİŞ | COUNTER SHAFT 16/21 T. | |
| | | | (389 263 3102) | | | | |
| | | | (389 263 2502) | | | | |
| | | | (389 263 1602) | | | | |
| | | | (389 263 1302) | | | | |
| 7 | K21.03624 | 016 981 1205 | (012 981 9405) | 1 | GRUP MİLİ ARKA BİLYA | ROLLER BEARING | 60x130x33,8mm |



**Original parts names, oem numbers, symbols and descriptions used in this catalogue are for reference purposes only.**

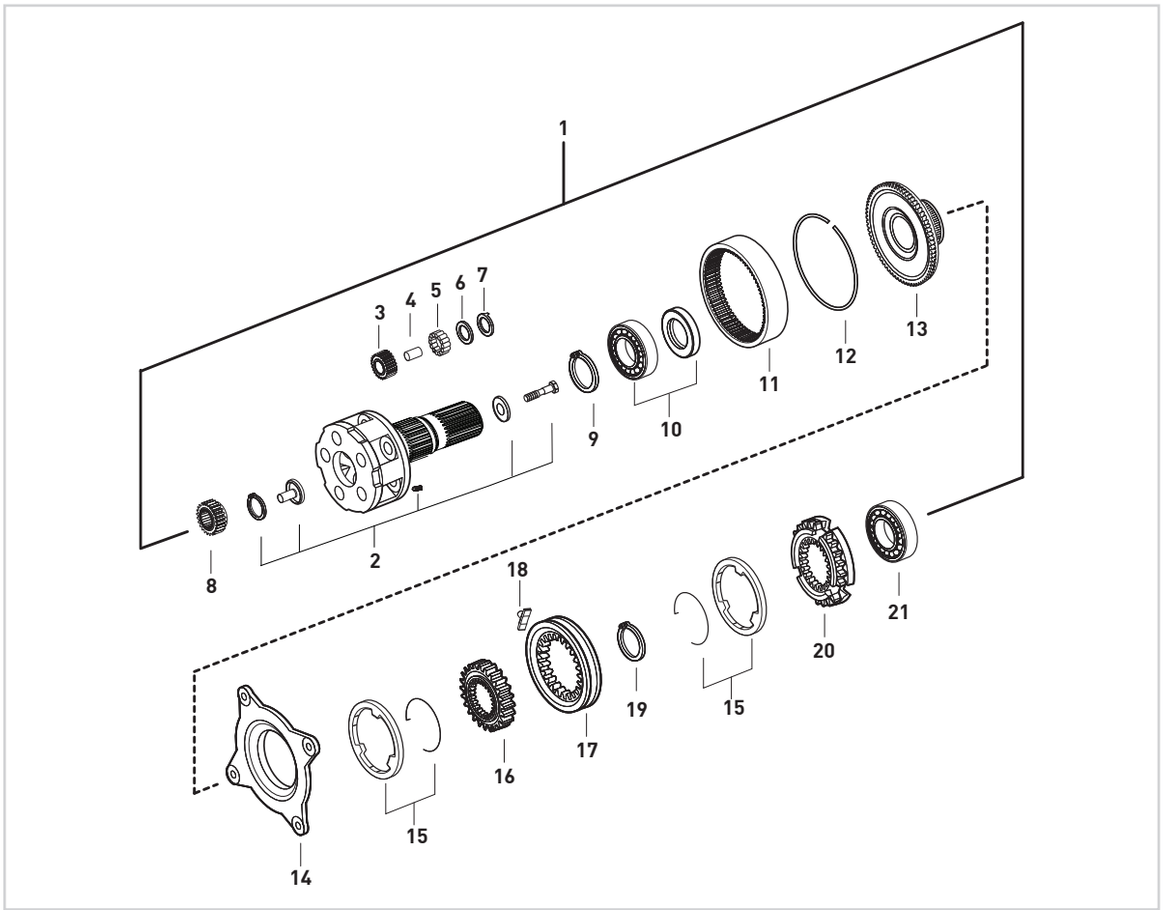


| Fig. | Kacmaz No. | Oem No | Oem Old No | Pcs. | Ürün Tanımı | Description | Sizes |
|---|---|---|---|---|---|---|---|
| 1 | K21.03554 | | | Kit | AĞIR SERİ ARKA AKTARMA KOMPLE | PLANETARY CARRIER COMPLETE | |
| 2 | K21.03180 | 946 260 3561 | (946 260 3661) | 1 | ŞANZIMAN HEYKELİ (BOŞ) | PLANETARY CARRIER (EMPTY) | |
| | | | (945 260 4561) | | | | |
| | | | (945 260 4461) | | | | |
| 3 | K21.03436 | 945 262 0006 | | 5 | HEYKEL KOZA DİŞLİSİ 28 DİŞ | PLANETARY GEAR 28 T. | |
| 4 | K21.03437 | 389 262 0407 | | 5 | HEYKEL KOZA DİŞLİ PİMİ | PLANETARY GEAR PIN | |
| 5 | K21.03816 | 000 981 4186 | (000 981 4386) | 125 | HEYKEL KOZA DİŞLİ TANE BİLYA | NEEDLE ROLLER | D5X39,6 |
| 6 | K21.04074 | 389 262 0162 | (389 262 6462) | 10 | HEYKEL KOZA DİŞLİ PULU | THRUST WASHER | |
| 7 | K21.04075 | 945 262 1162 | (945 262 0162) | 10 | HEYKEL KOZA DİŞLİ PULU | THRUST WASHER | |
| 8 | K21.03169 | 945 262 0909 | (389 262 0809) | 1 | GÜNEŞ DİŞLİ 25 DİŞ | SUN GEAR 25 T. | |
| | | | (389 262 0909) | | | | |
| 9 | K21.06864 | 000472 130000 | | 1 | ÇEMBER DİŞLİ BİLYA SEKMANI | RETAINING RING | 130X4mm |
| 10 | K21.03614 | 008 981 1325 | (004 981 8725) | 1 | ÇEMBER DİŞLİ BİLYASI | ROLLER BEARING | 90X130X14mm |
| 11 | K21.03449 | 945 262 1208 | (945 262 0808) | 1 | ÇEMBER DİŞLİ 85 DİŞ | RING WHEEL 85 T. | |
| 12 | K21.04253 | 389 262 0773 | | 1 | ÇEMBER DİŞLİ SEKMANI | LOCK RING | |
| 13 | K21.03442 | 930 262 0125 | (389 262 1425) | 1 | PLANET ÇAN DİŞLİ 85 DİŞ | CARRIER HUB 85 T. | |
| 14 | K21.03037 | 947 260 3036 | (947 260 0836) | 1 | TABLA SENKROMENÇ | FOLLOWER RING | |
| 15 | K21.03185 | 947 260 0945 | | 2 | AĞIR SERİ FRENLEME (Mo) | SYNCHRONIZING CONE / Mo | |
| 16 | K21.03079 | 389 262 4935 | (389 262 2035) | 1 | AĞIR SERİ YILDIZ DİŞLİ 73 DİŞ | SYNCHRONIZER HUB 73 T. | |
| 17 | K21.03033 | 945 262 6923 | (930 262 0623) | 1 | AĞIR SERİ HALKA | ENGAGING SLEEVE | |
| 18 | K21.03431 | 960 265 0049 | (947 265 0349) | 2 | AĞIR SERİ HİLAL PABUCU | SLIDING PAD | |
| 19 | K21.04356 | 000471 120000 | | 1 | AĞIR SERİ YILDIZ DİŞLİ SEKMANI | RETAINING RING | |
| 20 | K21.03186 | 945 262 3834 | | 1 | SERİ SENKROMENÇ | ENGAGING RING | |
| 21 | K21.03625 | 008 981 3025 | (008 981 5225) | 1 | ŞANZIMAN ARKA BİLYA | ROLLER BEARING | 80X150X28mm |



Original parts names, oem numbers, symbols and descriptions used in this catalogue are for reference purposes only.

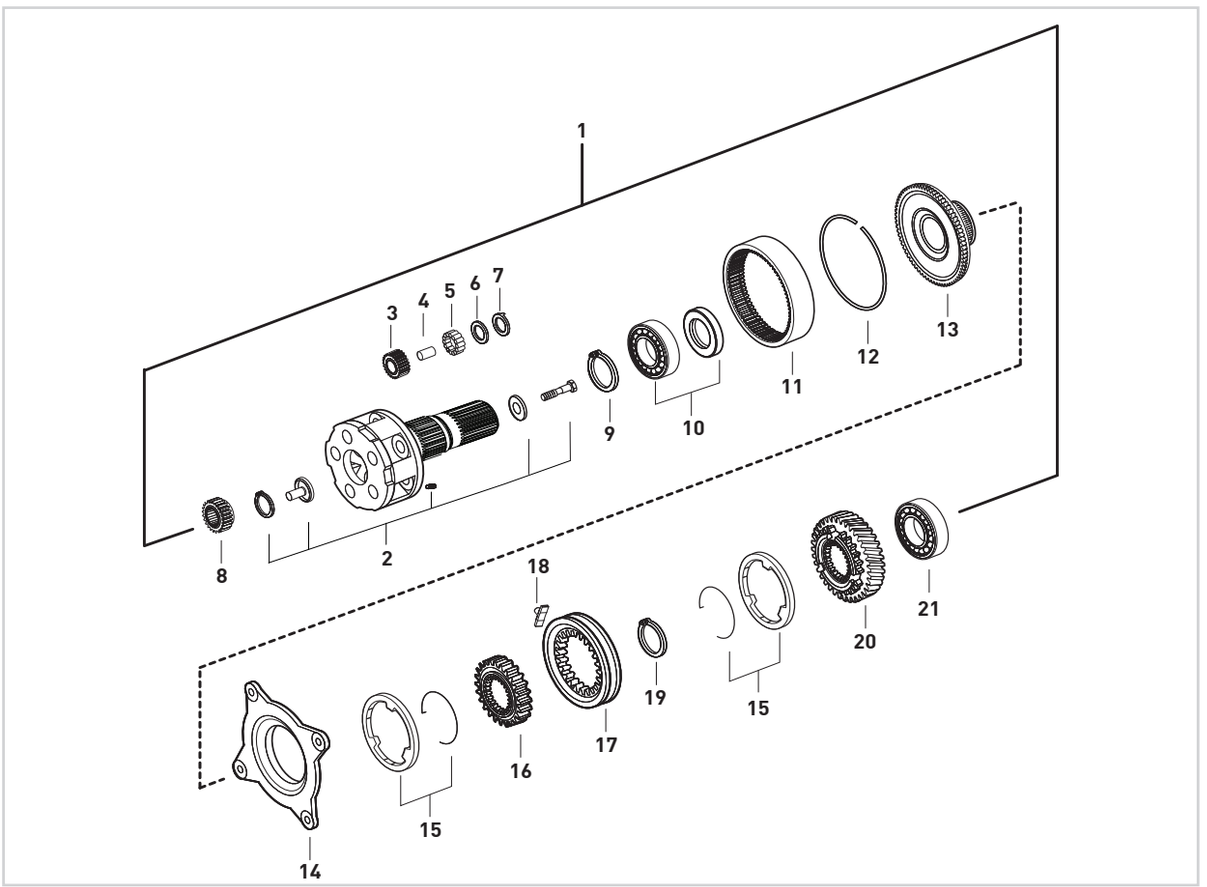


| Fig. | Kacmaz No. | Oem No | Oem Old No | Pcs. | Ürün Tanımı | Description | Sizes |
|---|---|---|---|---|---|---|---|
| 1 | K21.06384 | | | Kit | AĞIR SERİ ARKA AKTARMA KOMPLE | PLANETARY CARRIER COMPLETE | |
| 2 | K21.03180 | 946 260 3561 | (946 260 3661) | 1 | ŞANZIMAN HEYKELİ (BOŞ) | PLANETARY CARRIER (EMPTY) | |
| | | | (945 260 4561) | | | | |
| | | | (945 260 4461) | | | | |
| 3 | K21.03436 | 945 262 0006 | | 5 | HEYKEL KOZA DİŞLİSİ 28 DİŞ | PLANETARY GEAR 28 T. | |
| 4 | K21.03437 | 389 262 0407 | | 5 | HEYKEL KOZA DİŞLİ PİMİ | PLANETARY GEAR PIN | |
| 5 | K21.03816 | 000 981 4186 | (000 981 4386) | 125 | HEYKEL KOZA DİŞLİ TANE BİLYA | NEEDLE ROLLER | D5X39,6 |
| 6 | K21.04074 | 389 262 0162 | (389 262 6462) | 10 | HEYKEL KOZA DİŞLİ PULU | THRUST WASHER | |
| 7 | K21.04075 | 945 262 1162 | (945 262 0162) | 10 | HEYKEL KOZA DİŞLİ PULU | THRUST WASHER | |
| 8 | K21.03169 | 945 262 0909 | (389 262 0809) | 1 | GÜNEŞ DİŞLİ 25 DİŞ | SUN GEAR 25 T. | |
| | | | (389 262 0909) | | | | |
| 9 | K21.06864 | 000472 130000 | | 1 | ÇEMBER DİŞLİ BİLYA SEKMANI | RETAINING RING | 130X4mm |
| 10 | K21.03614 | 008 981 1325 | (004 981 8725) | 1 | ÇEMBER DİŞLİ BİLYASI | ROLLER BEARING | 90X130X14mm |
| 11 | K21.03449 | 945 262 1208 | (945 262 0808) | 1 | ÇEMBER DİŞLİ 85 DİŞ | RING WHEEL 85 T. | |
| 12 | K21.04253 | 389 262 0773 | | 1 | ÇEMBER DİŞLİ SEKMANI | LOCK RING | |
| 13 | K21.03442 | 930 262 0125 | (389 262 1425) | 1 | PLANET ÇAN DİŞLİ 85 DİŞ | CARRIER HUB 85 T. | |
| 14 | K21.03037 | 947 260 3036 | (947 260 0836) | 1 | TABLA SENKROMENÇ | FOLLOWER RING | |
| 15 | K21.03185 | 947 260 0945 | | 2 | AĞIR SERİ FRENLEME (Mo) | SYNCHRONIZING CONE / Mo | |
| 16 | K21.03079 | 389 262 4935 | (389 262 2035) | 1 | AĞIR SERİ YILDIZ DİŞLİ 73 DİŞ | SYNCHRONIZER HUB 73 T. | |
| 17 | K21.03033 | 945 262 6923 | (930 262 0623) | 1 | AĞIR SERİ HALKA | ENGAGING SLEEVE | |
| 18 | K21.03431 | 960 265 0049 | (947 265 0349) | 2 | AĞIR SERİ HİLAL PABUCU | SLIDING PAD | |
| 19 | K21.04356 | 000471 120000 | | 1 | AĞIR SERİ YILDIZ DİŞLİ SEKMANI | RETAINING RING | |
| 20 | K21.03188 | 930 264 0320 | | 1 | RETARDER DİŞLİSİ 64 DİŞ | RETARDER GEAR 64 T. | |
| 21 | K21.03625 | 008 981 3025 | (008 981 5225) | 1 | ŞANZIMAN ARKA BİLYA | ROLLER BEARING | 80X150X28mm |



**Original parts names, oem numbers, symbols and descriptions used in this catalogue are for reference purposes only.**

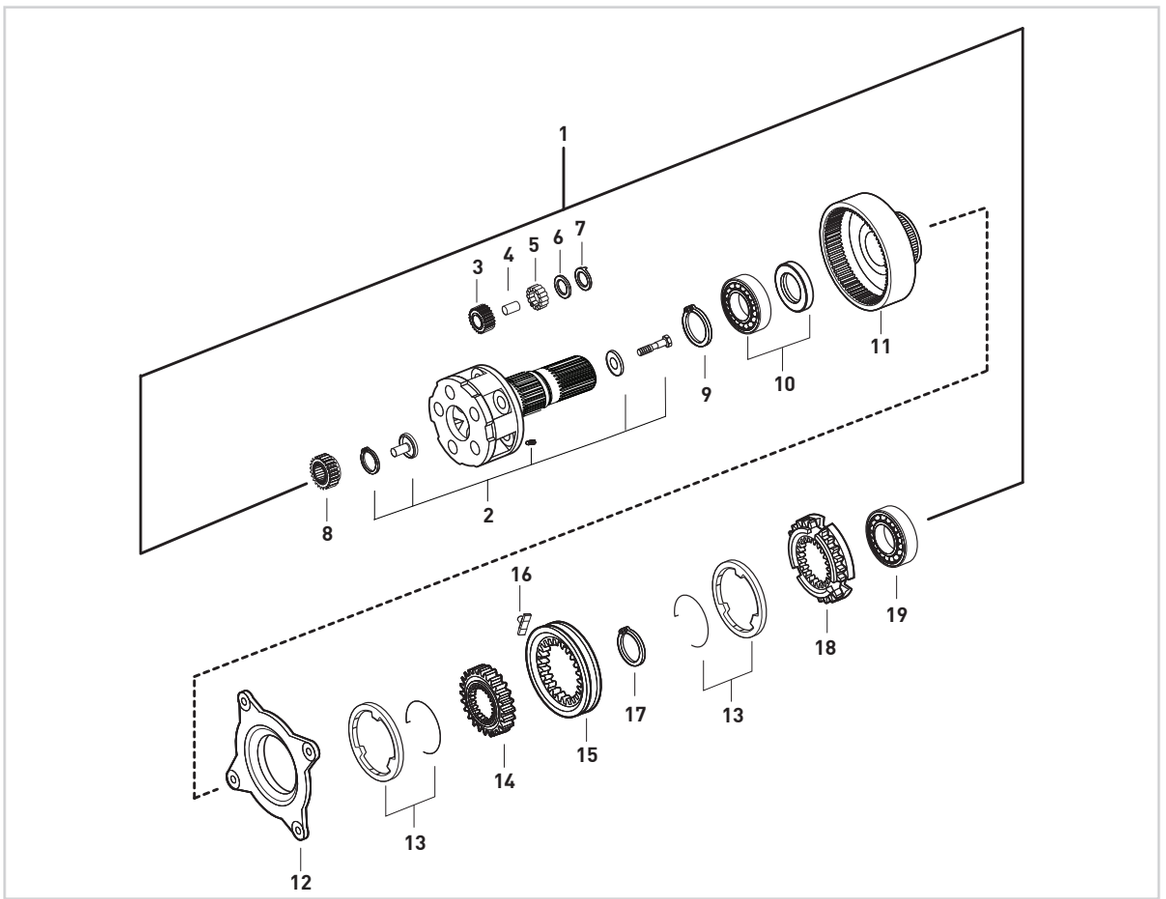


| Fig. | Kacmaz No. | Oem No | Oem Old No | Pcs. | Ürün Tanımı | Description | Sizes |
|---|---|---|---|---|---|---|---|
| 1 | K21.06382 | | | Kit | AĞIR SERİ ARKA AKTARMA KOMPLE | PLANETARY CARRIER COMPLETE | |
| 2 | K21.03180 | 946 260 3561 | (946 260 3661) | 1 | ŞANZIMAN HEYKELİ (BOŞ) | PLANETARY CARRIER (EMPTY) | |
| | | | (945 260 4561) | | | | |
| | | | (945 260 4461) | | | | |
| 3 | K21.03436 | 945 262 0006 | | 5 | HEYKEL KOZA DİŞLİSİ 28 DİŞ | PLANETARY GEAR 28 T. | |
| 4 | K21.03437 | 389 262 0407 | | 5 | HEYKEL KOZA DİŞLİ PİMİ | PLANETARY GEAR PIN | |
| 5 | K21.03816 | 000 981 4186 | (000 981 4386) | 125 | HEYKEL KOZA DİŞLİ TANE BİLYA | NEEDLE ROLLER | D5X39,6 |
| 6 | K21.04074 | 389 262 0162 | (389 262 6462) | 10 | HEYKEL KOZA DİŞLİ PULU | THRUST WASHER | |
| 7 | K21.04075 | 389 262 1162 | (945 262 0162) | 10 | HEYKEL KOZA DİŞLİ PULU | THRUST WASHER | |
| 8 | K21.03169 | 945 262 0909 | (389 262 0809) | 1 | GÜNEŞ DİŞLİ 25 DİŞ | SUN GEAR 25 T. | |
| | | | (389 262 0909) | | | | |
| 9 | K21.06864 | 000472 130000 | | 1 | ÇEMBER DİŞLİ BİLYA SEKMANI | RETAINING RING | 130X4mm |
| 10 | K21.03614 | 008 981 1325 | (004 981 8725) | 1 | ÇEMBER DİŞLİ BİLYASI | ROLLER BEARING | 90X130X14mm |
| 11 | K21.03438 | 945 262 0108 | (389 262 0808) | 1 | ÇEMBER DİŞLİ 85 DİŞ | RING WHEEL 85 T. | |
| 12 | K21.03018 | 389 260 2036 | | 1 | TABLA SENKROMENÇ | FOLLOWER RING | |
| 13 | K21.03017 | 389 262 0537 | (389 262 0037) | 2 | AĞIR SERİ FRENLEME (Mo) | SYNCHRONIZING CONE / Mo | |
| 14 | K21.03079 | 389 262 4935 | (389 262 2035) | 1 | AĞIR SERİ YILDIZ DİŞLİ 73 DİŞ. | SYNCHRONIZER HUB 73 T. | |
| 15 | K21.03028 | 945 262 6623 | (945 262 0823) | 1 | AĞIR SERİ HALKA 73 DİŞ | ENGAGING SLEEVE 73 T. | |
| | | | (389 262 1623) | | | | |
| | | | (389 262 3823) | | | | |
| 16 | K21.03406 | 389 265 2449 | (389 265 1249) | 2 | AĞIR SERİ HİLAL PABUCU | SLIDING PAD | |
| 17 | K21.04356 | 000471 120000 | | 1 | AĞIR SERİ YILDIZ DİŞLİ SEKMANI | RETAINING RING | |
| 18 | K21.03187 | 389 262 9234 | (945 262 1234) | 1 | SERİ SENKROMENÇ | ENGAGING RING | |
| 19 | K21.03625 | 008 981 3025 | (008 981 5225) | 1 | ŞANZIMAN ARKA BİLYA | ROLLER BEARING | 80X150X28mm |



Original parts names, oem numbers, symbols and descriptions used in this catalogue are for reference purposes only.

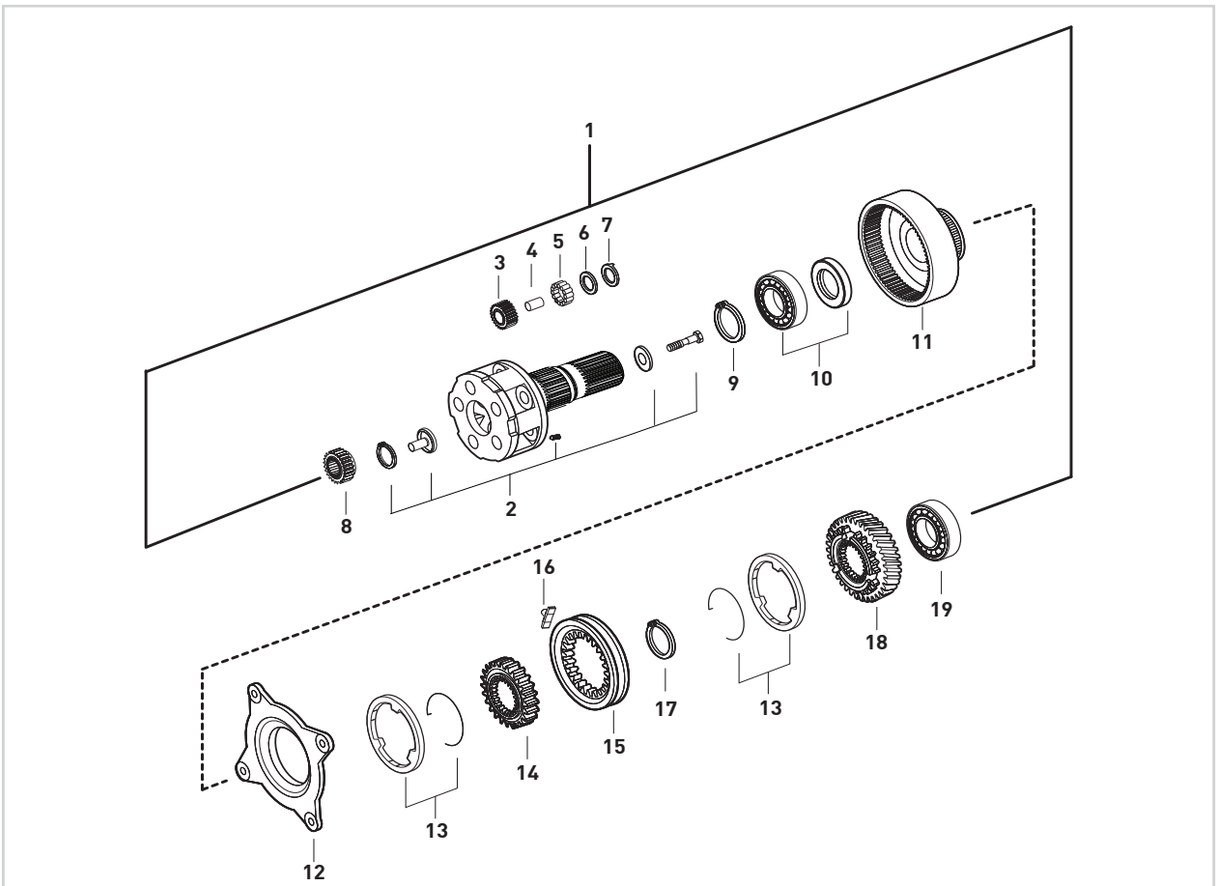


| Fig. | Kacmaz No. | Oem No | Oem Old No | Pcs. | Ürün Tanımı | Description | Sizes |
|---|---|---|---|---|---|---|---|
| 1 | K21.06383 | | | Kit | AĞIR SERİ ARKA AKTARMA KOMPLE | PLANETARY CARRIER COMPLETE | |
| 2 | K21.03180 | 946 260 3561 | (946 260 3661) | 1 | ŞANZIMAN HEYKELİ (BOŞ) | PLANETARY CARRIER (EMPTY) | |
| | | | (945 260 4561) | | | | |
| | | | (945 260 4461) | | | | |
| 3 | K21.03436 | 945 262 0006 | | 5 | HEYKEL KOZA DİŞLİSİ 28 DİŞ | PLANETARY GEAR 28 T. | |
| 4 | K21.03437 | 389 262 0407 | | 5 | HEYKEL KOZA DİŞLİ PİMİ | PLANETARY GEAR PIN | |
| 5 | K21.03816 | 000 981 4186 | (000 981 4386) | 125 | HEYKEL KOZA DİŞLİ TANE BİLYA | NEEDLE ROLLER | D5X39,6 |
| 6 | K21.04074 | 389 262 0162 | (389 262 6462) | 10 | HEYKEL KOZA DİŞLİ PULU | THRUST WASHER | |
| 7 | K21.04075 | 389 262 1162 | (945 262 0162) | 10 | HEYKEL KOZA DİŞLİ PULU | THRUST WASHER | |
| 8 | K21.03169 | 945 262 0909 | (389 262 0809) | 1 | GÜNEŞ DİŞLİ 25 DİŞ | SUN GEAR 25 T. | |
| | | | (389 262 0909) | | | | |
| 9 | K21.06864 | 000472 130000 | | 1 | ÇEMBER DİŞLİ BİLYA SEKMANI | RETAINING RING | 130X4mm |
| 10 | K21.03614 | 008 981 1325 | | 1 | ÇEMBER DİŞLİ BİLYASI | ROLLER BEARING | 90X130X14mm |
| 11 | K21.03438 | 945 262 0108 | (389 262 0808) | 1 | ÇEMBER DİŞLİ 85 DİŞ | RING WHEEL 85 T. | |
| 12 | K21.03018 | 389 260 2036 | | 1 | TABLA SENKROMENÇ | FOLLOWER RING | |
| 13 | K21.03017 | 389 262 0537 | (389 262 0037) | 2 | AĞIR SERİ FRENLEME (Mo) | SYNCHRONIZING CONE / Mo | |
| 14 | K21.03079 | 389 262 4935 | (389 262 2035) | 1 | AĞIR SERİ YILDIZ DİŞLİ 73 DİŞ | SYNCHRONIZER HUB 73 T. | |
| 15 | K21.03028 | 945 262 6623 | (945 262 0823) | 1 | AĞIR SERİ HALKA 73 DİŞ | ENGAGING SLEEVE 73 T. | |
| | | | (389 262 1623) | | | | |
| | | | (389 262 3823) | | | | |
| 16 | K21.03406 | 389 265 2449 | (389 265 1249) | 2 | AĞIR SERİ HİLAL PABUCU | SLIDING PAD | |
| 17 | K21.04356 | 000471 120000 | | 1 | AĞIR SERİ YILDIZ DİŞLİ SEKMANI | RETAINING RING | |
| 18 | K21.06050 | 945 264 0130 | (389 264 0730) | 1 | RETARDER DİŞLİSİ 63 DİŞ | ENGAGING RING 63 T. | |
| 19 | K21.03625 | 008 981 3025 | (008 981 5225) | 1 | ŞANZIMAN ARKA BİLYA | ROLLER BEARING | 80X150X28mm |



**Original parts names, oem numbers, symbols and descriptions used in this catalogue are for reference purposes only.**

# NOTES / NOTLAR



Original parts names, oem numbers, symbols and descriptions used in this catalogue are for reference purposes only.

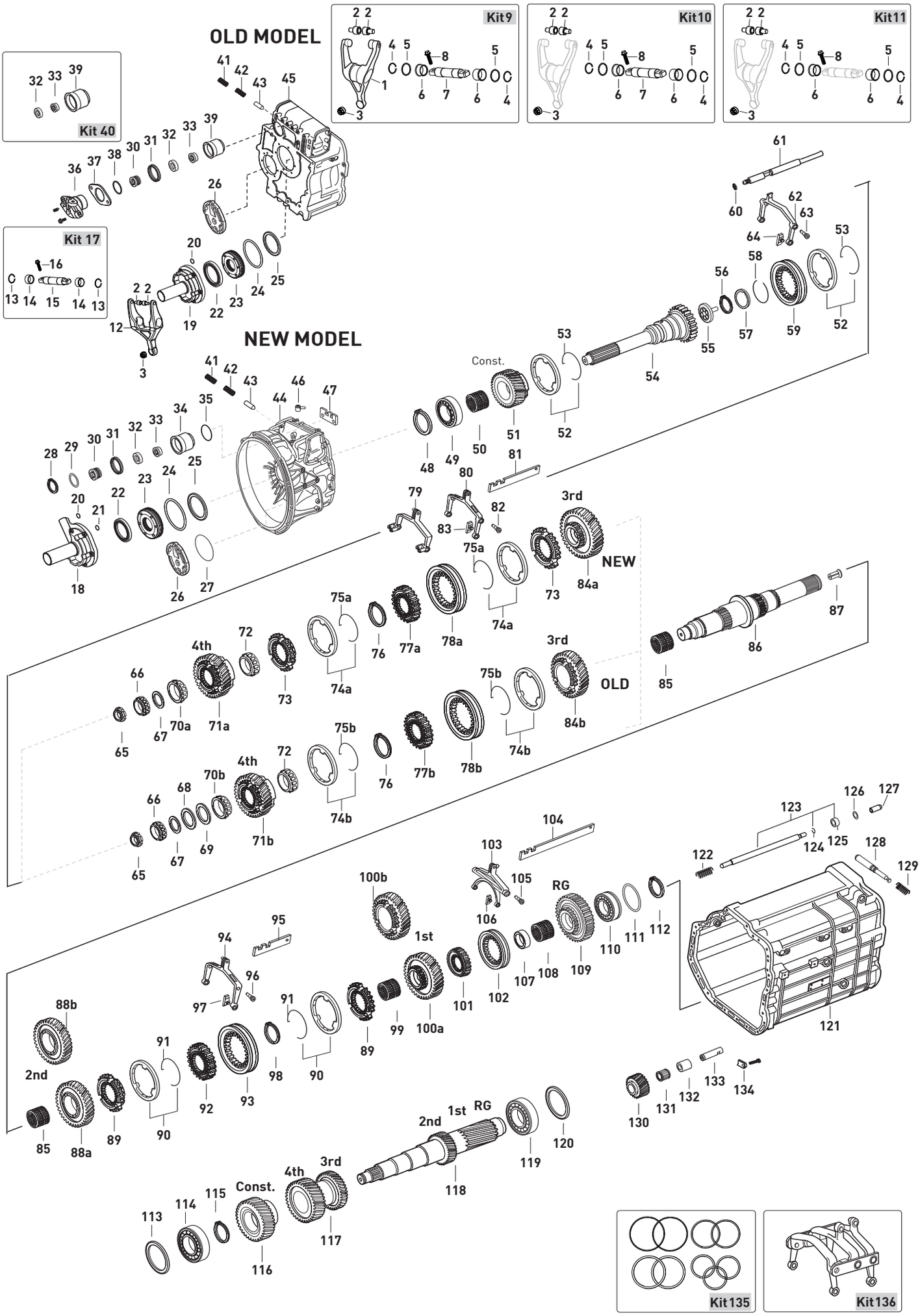






Original parts names, oem numbers, symbols and descriptions used in this catalogue are for reference purposes only.

| Fig. | Kacmaz No | Oem No | Oem Old No | Pcs. | Ürün Tanımı | Description | Sizes | Not | 715520 | 715521 | 715527 | 715260 | 715261 | 715400 | 715410 | 715411 |
|---|---|---|---|---|---|---|---|---|---|---|---|---|---|---|---|---|
| 1 | | 655 250 1513 | | 1 | DEBRİYAJ ÇATALI | RELEASE FORK | | | ♦ | ♦ | ♦ | | | | | |
| 2 | K21.07038 | 000 254 0017 | | 2 | DEBRİYAJ ÇATAL BURÇ VE PİMİ | CAM ROLLER | | | ♦ | ♦ | ♦ | ♦ | ♦ | ♦ | ♦ | ♦ |
| 3 | K21.07040 | 000 254 0335 | | 1 | DEBRİYAJ ÇATAL PLASTİK BURCU | PLASTIC BUSHING | | | ♦ | ♦ | ♦ | ♦ | ♦ | ♦ | ♦ | ♦ |
| 4 | | 912009 035100 | | 2 | DEBRİYAJ ÇATAL MİL SEKMANI | RETAINING RING | | | ♦ | ♦ | ♦ | | | | | |
| 5 | | 000988 036100 | | 2 | DEBRİYAJ ÇATAL MİL AYAR PULU | WASHER | | | ♦ | ♦ | ♦ | | | | | |
| 6 | | 002 992 1501 | | 2 | DEBRİYAJ ÇATAL MİL BURCU | BUSHING | | | ♦ | ♦ | ♦ | | | | | |
| 7 | | 655 254 0206 | | 1 | DEBRİYAJ ÇATAL MİLİ | SHAFT | | | ♦ | ♦ | ♦ | | | | | |
| 8 | | 910105 012026 | | 2 | DEBRİYAJ ÇATAL MİL VİDASI | SCREW | M12X40mm | | ♦ | ♦ | ♦ | | | | | |
| 9 | K21.07036 | 655 250 1813 | | Kit | DEBRİYAJ ÇATALI KOMPLE | RELEASE FORK COMPLETE | | | ♦ | ♦ | ♦ | | | | | |
| 9 | K21.97036 | 655 250 1813-S | | Kit | DEB.ÇATALI KOMPLE (BİLYALI TİP) | RELEASE FORK COMPLETE | | WITH BEARING | ♦ | ♦ | ♦ | | | | | |
| 10 | K21.07037 | | | Kit | DEBRİYAJ ÇATALI TAMİR TAKIMI | RELEASE FORK REPAIR KIT | | | ♦ | ♦ | ♦ | | | | | |
| 11 | K21.07039 | | | Kit | DEBRİYAJ ÇATALI TAMİR TK.MİLSİZ | RELEASE FORK REPAIR KIT | | W/OUT SHAFT | ♦ | ♦ | ♦ | | | | | |
| 12 | | 650 250 3813 | | 1 | DEBRİYAJ ÇATALI | RELEASE FORK | | | | | | ♦ | ♦ | ♦ | ♦ | ♦ |
| 13 | | 912009 037200 | | 4 | DEBRİYAJ ÇATAL MİL SEKMANI | RETAINING RING | | | | | | ♦ | ♦ | ♦ | ♦ | ♦ |
| 14 | | 001 992 8401 | | 2 | DEBRİYAJ ÇATAL MİL BURCU | BUSHING | | | | | | ♦ | ♦ | ♦ | ♦ | ♦ |
| 15 | | 650 254 0006 | | 1 | DEBRİYAJ ÇATAL MİLİ | SHAFT | | | | | | ♦ | ♦ | ♦ | ♦ | ♦ |
| 16 | | 914112 010025 | | 2 | DEBRİYAJ ÇATAL MİL VİDASI | SCREW | | | | | | ♦ | ♦ | ♦ | ♦ | ♦ |
| 17 | K21.04309 | | | Kit | DEBRİYAJ ÇATAL TAMİR TAKIMI | RELEASE FORK REPAIR KIT | | | | | | ♦ | ♦ | ♦ | ♦ | ♦ |
| 18 | K21.03429 | 945 261 1118 | (945 261 0118) | 1 | PRİZDİREK KEÇE KAPAĞI | COVER | | | ♦ | ♦ | ♦ | | | | | |
| | | | (945 261 0818) | | | | | | | | | | | | | |
| 19 | K21.03430 | 389 261 4518 | | 1 | PRİZDİREK KEÇE KAPAĞI | COVER | | | | | | ♦ | ♦ | | | |
| 19 | K21.03450 | 945 261 1218 | (389 261 4818) | 1 | PRİZDİREK KEÇE KAPAĞI | COVER | | | | | | | | ♦ | ♦ | ♦ |
| 20 | K21.06637 | 019 997 8348 | (020 997 7948) | 1 | PRİZDİREK KEÇE KAPAK ORİNGİ | O-RING | 14X4mm | | ♦ | ♦ | ♦ | ♦ | ♦ | ♦ | ♦ | ♦ |
| 21 | K21.06636 | 015 997 4048 | (020 997 8748) | 1 | PRİZDİREK KEÇE KAPAK ORİNGİ | O-RING | 5X3mm | | ♦ | ♦ | ♦ | | | | | |
| 22 | K21.03509 | 019 997 0547 | (023 997 7847) | 1 | PRİZDİREK KEÇESİ | OIL SEAL | 56X72X8mm | | ♦ | ♦ | ♦ | ♦ | ♦ | ♦ | ♦ | ♦ |
| | | | (019 997 0647) | | | | | | | | | | | | | |
| | | | (022 997 8547) | | | | | | | | | | | | | |
| 23 | K21.06038 | 389 261 0665 | (389 261 0765) | 1 | YAĞ TUTUCU DİSK | OIL BAFFLE | 75X16mm | | ♦ | ♦ | ♦ | ♦ | ♦ | ♦ | ♦ | ♦ |
| | | | (389 261 0865) | | | | | | | | | | | | | |
| 24 | K21.06635 | 020 997 7848 | | 1 | PRİZDİREK KEÇE KAPAK ORİNGİ | O-RING | 138X3mm | | ♦ | ♦ | ♦ | | | ♦ | ♦ | ♦ |
| 24 | K21.06712 | 028 997 2248 | (019 997 7248) | 1 | PRİZDİREK KEÇE KAPAK ORİNGİ | O-RING | 140X3mm | | ♦ | ♦ | | ♦ | ♦ | ♦ | ♦ | ♦ |
| 25 | K21.04162 | 389 262 4152 | (389 262 0955) | 1 | PRİZDİREK AYAR RAYNELİ | THRUST WASHER | 0,10mm | | ♦ | ♦ | ♦ | ♦ | ♦ | ♦ | ♦ | ♦ |
| 25 | K21.04243 | 389 262 0855 | | 1 | PRİZDİREK AYAR RAYNELİ | THRUST WASHER | 0,15mm | | ♦ | ♦ | ♦ | ♦ | ♦ | ♦ | ♦ | ♦ |
| 25 | K21.04151 | 389 262 0755 | | 1 | PRİZDİREK AYAR RAYNELİ | THRUST WASHER | 0,20mm | | ♦ | ♦ | ♦ | ♦ | ♦ | ♦ | ♦ | ♦ |
| 25 | K21.06715 | 389 262 3055 | | 1 | PRİZDİREK AYAR RAYNELİ | THRUST WASHER | 0,25mm | | ♦ | ♦ | ♦ | ♦ | ♦ | ♦ | ♦ | ♦ |
| 25 | K21.04221 | 389 262 3255 | | 1 | PRİZDİREK AYAR RAYNELİ | THRUST WASHER | 0,31mm | | ♦ | ♦ | ♦ | ♦ | ♦ | ♦ | ♦ | ♦ |
| 25 | K21.04163 | 389 262 3555 | (389 262 0655) | 1 | PRİZDİREK AYAR RAYNELİ | THRUST WASHER | 0,40mm | | ♦ | ♦ | ♦ | ♦ | ♦ | ♦ | ♦ | ♦ |
| | | | (389 262 4452) | | | | | | | | | | | | | |
| 25 | K21.04164 | 389 262 3755 | (389 262 1954) | 1 | PRİZDİREK AYAR RAYNELİ | THRUST WASHER | 0,46mm | | ♦ | ♦ | ♦ | ♦ | ♦ | ♦ | ♦ | ♦ |
| 25 | K21.04246 | 389 262 3855 | | 1 | PRİZDİREK AYAR RAYNELİ | THRUST WASHER | 0,49mm | | ♦ | ♦ | ♦ | ♦ | ♦ | ♦ | ♦ | ♦ |
| 25 | K21.04250 | 389 262 4055 | (389 262 0155) | 1 | PRİZDİREK AYAR RAYNELİ | THRUST WASHER | 0,55mm | | ♦ | ♦ | ♦ | ♦ | ♦ | ♦ | ♦ | ♦ |
| | | | (389 262 2154) | | | | | | | | | | | | | |
| 25 | K21.04167 | 389 262 4255 | (389 262 2254) | 1 | PRİZDİREK AYAR RAYNELİ | THRUST WASHER | 0,61mm | | ♦ | ♦ | ♦ | ♦ | ♦ | ♦ | ♦ | ♦ |
| 25 | K21.04168 | 389 262 4355 | (389 262 2354) | 1 | PRİZDİREK AYAR RAYNELİ | THRUST WASHER | 0,64mm | | ♦ | ♦ | ♦ | ♦ | ♦ | ♦ | ♦ | ♦ |
| 25 | K21.04169 | 389 262 4555 | (389 262 2454) | 1 | PRİZDİREK AYAR RAYNELİ | THRUST WASHER | 0,70mm | | ♦ | ♦ | ♦ | ♦ | ♦ | ♦ | ♦ | ♦ |
| 25 | K21.04170 | 389 262 4755 | (389 262 2554) | 1 | PRİZDİREK AYAR RAYNELİ | THRUST WASHER | 0,76mm | | ♦ | ♦ | ♦ | ♦ | ♦ | ♦ | ♦ | ♦ |
| 25 | K21.04281 | 389 262 4855 | (389 262 0555) | 1 | PRİZDİREK AYAR RAYNELİ | THRUST WASHER | 0,79mm | | ♦ | ♦ | ♦ | ♦ | ♦ | ♦ | ♦ | ♦ |
| 25 | K21.04282 | 389 262 5555 | | 1 | PRİZDİREK AYAR RAYNELİ | THRUST WASHER | 1,00mm | | ♦ | ♦ | ♦ | ♦ | ♦ | ♦ | ♦ | ♦ |
| 25 | K21.04171 | 389 262 9654 | (389 262 2654) | 1 | PRİZDİREK AYAR RAYNELİ | THRUST WASHER | 2,00mm | | ♦ | ♦ | ♦ | ♦ | ♦ | ♦ | ♦ | ♦ |
| 26 | | 976 261 1833 | (976 261 1733) | 1 | GRUP MİLİ ÖN BİLYA KAPAĞI | COVER | | | ♦ | ♦ | ♦ | | | | | |
| | | | (976 261 1633) | | | | | | | | | | | | | |
| 26 | | 389 261 1933 | (389 261 0633) | 1 | GRUP MİLİ ÖN BİLYA KAPAĞI | COVER | | | | | | ♦ | ♦ | ♦ | ♦ | ♦ |
| | | | (389 262 0133) | | | | | | | | | | | | | |

NOTES :
Parts encoded alphabetic and numaric are used together.

GEARBOX TYPE:
715520 - 715521 - 715527 - G240 - 16 /11,7 - 0,69 NEW
715260 - G240 - 16 /11,7 - 0,69 EPS
715261 - 715400 - 715410 - 715411 - G240 - 16 /11,7 - 0,69 OLD

NOTLAR :
Alfabetik ve rakam ile kodlanan parçalar birlikte kullanılır.

ŞANZIMAN TİPLERİ:
715520 - 715521 - 715527 - G240 - 16 /11,7 - 0,69 NEW
715260 - G240 - 16 /11,7 - 0,69 EPS
715261 - 715400 - 715410 - 715411 - G240 - 16 /11,7 - 0,69 OLD





Original parts names, oem numbers, symbols and descriptions used in this catalogue are for reference purposes only.

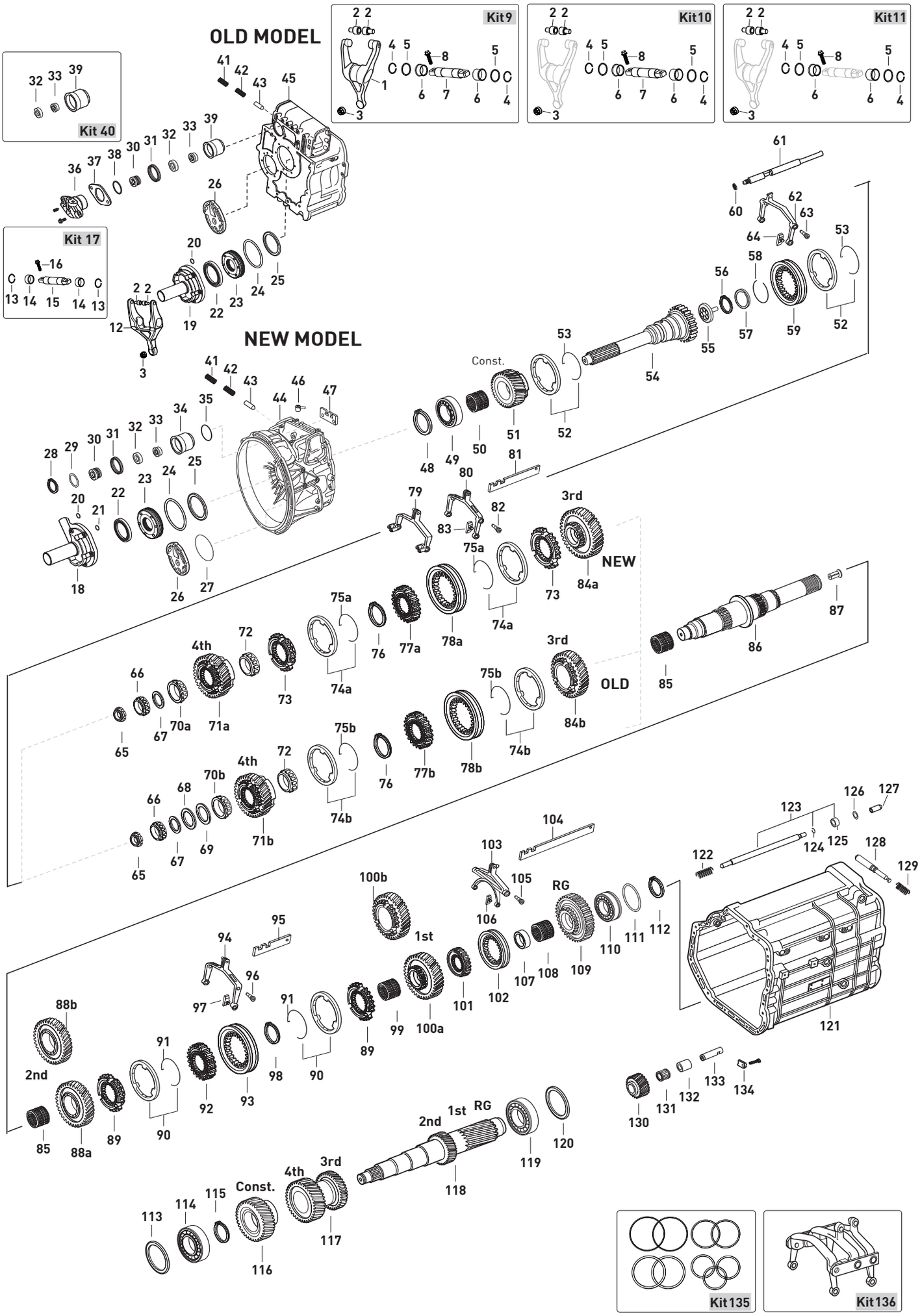






Original parts names, oem numbers, symbols and descriptions used in this catalogue are for reference purposes only.

| Fig. | Kacmaz No | Oem No | Oem Old No | Pcs. | Ürün Tanımı | Description | Sizes | Not | 715520 | 715521 | 715527 | 715260 | 715261 | 715400 | 715410 | 715411 |
|---|---|---|---|---|---|---|---|---|---|---|---|---|---|---|---|---|
| 27 | K21.06533 | 028 997 2348 | (004 997 2248) | 1 | GRUP MİLİ BİLYA KAPAK ORİNGİ | O-RING | 100X3mm | | ♦ | ♦ | ♦ | | | | | |
| 28 | | 006 994 4241 | (000472 065001) | 1 | TAKVİYE PİSTON SEKMANI | RETAINING RING | 65X2,5mm | | ♦ | ♦ | ♦ | | | ♦ | ♦ | ♦ |
| 29 | K21.04233 | 389 262 2555 | | 1 | TAKVİYE SİLİNDİR PULU | SPACER WASHER | 0,70mm | | ♦ | ♦ | ♦ | | | ♦ | ♦ | ♦ |
| 29 | K21.04234 | 389 262 2655 | | 1 | TAKVİYE SİLİNDİR PULU | SPACER WASHER | 0,90mm | | ♦ | ♦ | ♦ | | | ♦ | ♦ | ♦ |
| 29 | K21.04112 | 389 262 3254 | | 1 | TAKVİYE SİLİNDİR PULU | SPACER WASHER | 1,05mm | | ♦ | ♦ | ♦ | | | ♦ | ♦ | ♦ |
| 29 | K21.04111 | 389 262 3354 | | 1 | TAKVİYE SİLİNDİR PULU | SPACER WASHER | 1,10mm | | ♦ | ♦ | ♦ | | | ♦ | ♦ | ♦ |
| 29 | K21.04109 | 389 262 3554 | | 1 | TAKVİYE SİLİNDİR PULU | SPACER WASHER | 1,20mm | | ♦ | ♦ | ♦ | | | ♦ | ♦ | ♦ |
| 29 | K21.04105 | 389 262 2052 | | 1 | TAKVİYE SİLİNDİR PULU | SPACER WASHER | 1,40mm | | ♦ | ♦ | ♦ | | | ♦ | ♦ | ♦ |
| 29 | K21.04093 | 389 262 2355 | | 1 | TAKVİYE SİLİNDİR PULU | SPACER WASHER | 1,79mm | | ♦ | ♦ | ♦ | | | ♦ | ♦ | ♦ |
| 29 | K21.04025 | 389 262 3252 | | 1 | TAKVİYE SİLİNDİR PULU | SPACER WASHER | 2,00mm | | ♦ | ♦ | ♦ | | | ♦ | ♦ | ♦ |
| 29 | K21.04024 | 389 262 3352 | | 1 | TAKVİYE SİLİNDİR PULU | SPACER WASHER | 2,50mm | | ♦ | ♦ | ♦ | | | ♦ | ♦ | ♦ |
| 30 | K21.06994 | 945 267 0218 | (387 267 0918) | 1 | TAKVİYE MİL PİSTONU | PISTON | | | ♦ | ♦ | ♦ | ♦ | ♦ | ♦ | ♦ | ♦ |
| | | | (387 267 0618) | | | | | | | | | | | | | |
| 31 | K21.03524 | 006 997 6447 | (020 997 6647) | 1 | TAKVİYE HAVA KEÇESİ | OIL SEAL | 41X48X11,5mm | | ♦ | ♦ | ♦ | ♦ | ♦ | ♦ | ♦ | ♦ |
| | | | (012 997 3347) | | | | | | | | | | | | | |
| 32 | K21.04178 | 387 267 0650 | (387 267 0250) | 1 | TAKVİYE SİLİNDİR BURCU | BUSHING | 34X22X8mm | | ♦ | ♦ | ♦ | ♦ | ♦ | ♦ | ♦ | ♦ |
| 33 | K21.03523 | 000 267 0197 | (000 267 0397) | 1 | TAKVİYE HİLAL MİL KEÇESİ | OIL SEAL | 22X32X8mm | | ♦ | ♦ | ♦ | ♦ | ♦ | ♦ | ♦ | ♦ |
| 34 | K21.06036 | 945 267 0819 | (945 267 0119) | 1 | TAKVİYE SİLİNDİR GÖVDESİ | CYLINDER | | | ♦ | ♦ | ♦ | | | ♦ | ♦ | ♦ |
| | | | (945 267 0719) | | | | | | | | | | | | | |
| | | | (945 267 0019) | | | | | | | | | | | | | |
| 35 | K21.06534 | 022 997 4248 | | 1 | TAKVİYE SİLİNDİR ORİNGİ | O-RING | 55,6X3mm | | ♦ | ♦ | ♦ | | | ♦ | ♦ | ♦ |
| 36 | K21.06236 | 389 267 2819 | (389 267 2719) | 1 | TAK.SİLİNDİR GÖVDE KAPAĞI | COVER | | | | | | ♦ | ♦ | | | |
| | | | (389 267 2419) | | | | | | | | | | | | | |
| | | | (389 267 2319) | | | | | | | | | | | | | |
| 37 | K21.04158 | 387 263 3352 | | 1 | TAKVİYE SİLİNDİR PULU | SPACER WASHER | 0,20mm | | | | | ♦ | ♦ | | | |
| 37 | K21.04159 | 387 263 3452 | | 1 | TAKVİYE SİLİNDİR PULU | SPACER WASHER | 0,40mm | | | | | ♦ | ♦ | | | |
| 37 | K21.04179 | 387 263 3552 | | 1 | TAKVİYE SİLİNDİR PULU | SPACER WASHER | 0,60mm | | | | | ♦ | ♦ | | | |
| 37 | K21.04181 | 387 263 3652 | | 1 | TAKVİYE SİLİNDİR PULU | SPACER WASHER | 0,80mm | | | | | ♦ | ♦ | | | |
| 37 | K21.04180 | 387 263 3752 | | 1 | TAKVİYE SİLİNDİR PULU | SPACER WASHER | 1,00mm | | | | | ♦ | ♦ | | | |
| 37 | K21.04251 | 387 263 3852 | | 1 | TAKVİYE SİLİNDİR PULU | SPACER WASHER | 2,00mm | | | | | ♦ | ♦ | | | |
| 38 | K21.06398 | 007 997 4248 | | 1 | TAKVİYE SİLİNDİR ORİNGİ | O-RING | 63X3mm | | | | | ♦ | ♦ | | | |
| 39 | K21.06013 | 389 267 3319 | (389 267 0419) | 1 | TAKVİYE SİLİNDİR GÖVDESİ (BOŞ) | CYLINDER (EMPTY) | | | | | | ♦ | ♦ | | | |
| | | | (389 267 2119) | | | | | | | | | | | | | |
| 40 | K21.06500 | | | Kit | TAKVİYE SİLİNDİR GÖVDESİ (DOLU) | CYLINDER (FULL) | | | | | | ♦ | ♦ | | | |
| 41 | K21.06015 | 387 993 4501 | | 1 | ŞANZ.TAKVİYE KİLİT FİŞEK YAYI | SPRING | 6,2X63mm | | ♦ | ♦ | ♦ | ♦ | ♦ | ♦ | ♦ | ♦ |
| 42 | K21.03500 | 387 993 4401 | (387 993 2501) | 1 | KİLİT YAYI | SPRING | 9,8X63,3mm | | ♦ | ♦ | ♦ | ♦ | ♦ | ♦ | ♦ | ♦ |
| 43 | K21.03492 | 389 267 1174 | (387 267 0074) | 1 | KİLİT FİŞEĞİ | PIN | | | ♦ | ♦ | ♦ | ♦ | ♦ | ♦ | ♦ | ♦ |
| 44 | K21.06526 | 945 260 8412 | (945 261 7501) | 1 | ŞANZIMAN ÖN GÖVDE | HOUSING | | | ♦ | ♦ | ♦ | | | | | |
| 44 | K21.06582 | 945 260 0111 | (945 260 2712) | 1 | ŞANZIMAN ÖN GÖVDE | HOUSING | | | ♦ | ♦ | ♦ | | | | | |
| 44 | | 655 260 2823 | | 1 | ŞANZIMAN ÖN GÖVDE | HOUSING | | | | | | | | ♦ | ♦ | ♦ |
| 45 | | 389 261 0408 | | 1 | ŞANZIMAN ÖN GÖVDE | HOUSING | | | | | | ♦ | ♦ | | | |
| 46 | K21.06529 | 437 261 0082 | (945 261 0082) | 1 | ŞANZIMAN HAVALANDIRMA | CAP | | | ♦ | ♦ | ♦ | | | | | |
| 47 | K21.06509 | 945 267 0459 | | 1 | VİTES HİLAL ÇITA KİLİTLEMESİ | BRACKET | | | ♦ | ♦ | ♦ | | | | | |
| 48 | K21.04347 | 387 262 8673 | | 1 | PRİZDİREK ÖN BİLYA SEKMANI | RETAINING RING | 3,15mm | | ♦ | ♦ | ♦ | ♦ | ♦ | ♦ | ♦ | ♦ |
| 48 | K21.04346 | 387 262 8773 | | 1 | PRİZDİREK ÖN BİLYA SEKMANI | RETAINING RING | 3,20mm | | ♦ | ♦ | ♦ | ♦ | ♦ | ♦ | ♦ | ♦ |
| 48 | K21.07015 | 387 262 8873 | | 1 | PRİZDİREK ÖN BİLYA SEKMANI | RETAINING RING | 3,25mm | | ♦ | ♦ | ♦ | ♦ | ♦ | ♦ | ♦ | ♦ |
| 48 | K21.04348 | 387 262 8973 | | 1 | PRİZDİREK ÖN BİLYA SEKMANI | RETAINING RING | 3,30mm | | ♦ | ♦ | ♦ | ♦ | ♦ | ♦ | ♦ | ♦ |
| 48 | K21.07016 | 387 262 9073 | | 1 | PRİZDİREK ÖN BİLYA SEKMANI | RETAINING RING | 3,35mm | | ♦ | ♦ | ♦ | ♦ | ♦ | ♦ | ♦ | ♦ |
| 48 | K21.04349 | 387 262 9173 | | 1 | PRİZDİREK ÖN BİLYA SEKMANI | RETAINING RING | 3,40mm | | ♦ | ♦ | ♦ | ♦ | ♦ | ♦ | ♦ | ♦ |
| 48 | K21.07017 | 387 262 9273 | | 1 | PRİZDİREK ÖN BİLYA SEKMANI | RETAINING RING | 3,45mm | | ♦ | ♦ | ♦ | ♦ | ♦ | ♦ | ♦ | ♦ |
| 48 | K21.04350 | 387 262 9373 | | 1 | PRİZDİREK ÖN BİLYA SEKMANI | RETAINING RING | 3,50mm | | ♦ | ♦ | ♦ | ♦ | ♦ | ♦ | ♦ | ♦ |
| 49 | K21.03618 | 011 981 1305 | (014 981 9005) | 1 | PRİZDİREK ÖN BİLYA | ROLLER BEARING | 75X140X34,25mm | | ♦ | ♦ | ♦ | ♦ | ♦ | ♦ | ♦ | ♦ |
| | | | (008 981 8605) | | | | | | | | | | | | | |

NOTES :
Parts encoded alphabetic and numaric are used together.

GEARBOX TYPE:
715520 - 715521 - 715527 - G240 - 16 /11,7 - 0,69 NEW
715260 - G240 - 16 /11,7 - 0,69 EPS
715261 - 715400 - 715410 - 715411 - G240 - 16 /11,7 - 0,69 OLD

NOTLAR :
Alfabetik ve rakam ile kodlanan parçalar birlikte kullanılır.

ŞANZIMAN TİPLERİ:
715520 - 715521 - 715527 - G240 - 16 /11,7 - 0,69 NEW
715260 - G240 - 16 /11,7 - 0,69 EPS
715261 - 715400 - 715410 - 715411 - G240 - 16 /11,7 - 0,69 OLD





Original parts names, oem numbers, symbols and descriptions used in this catalogue are for reference purposes only.

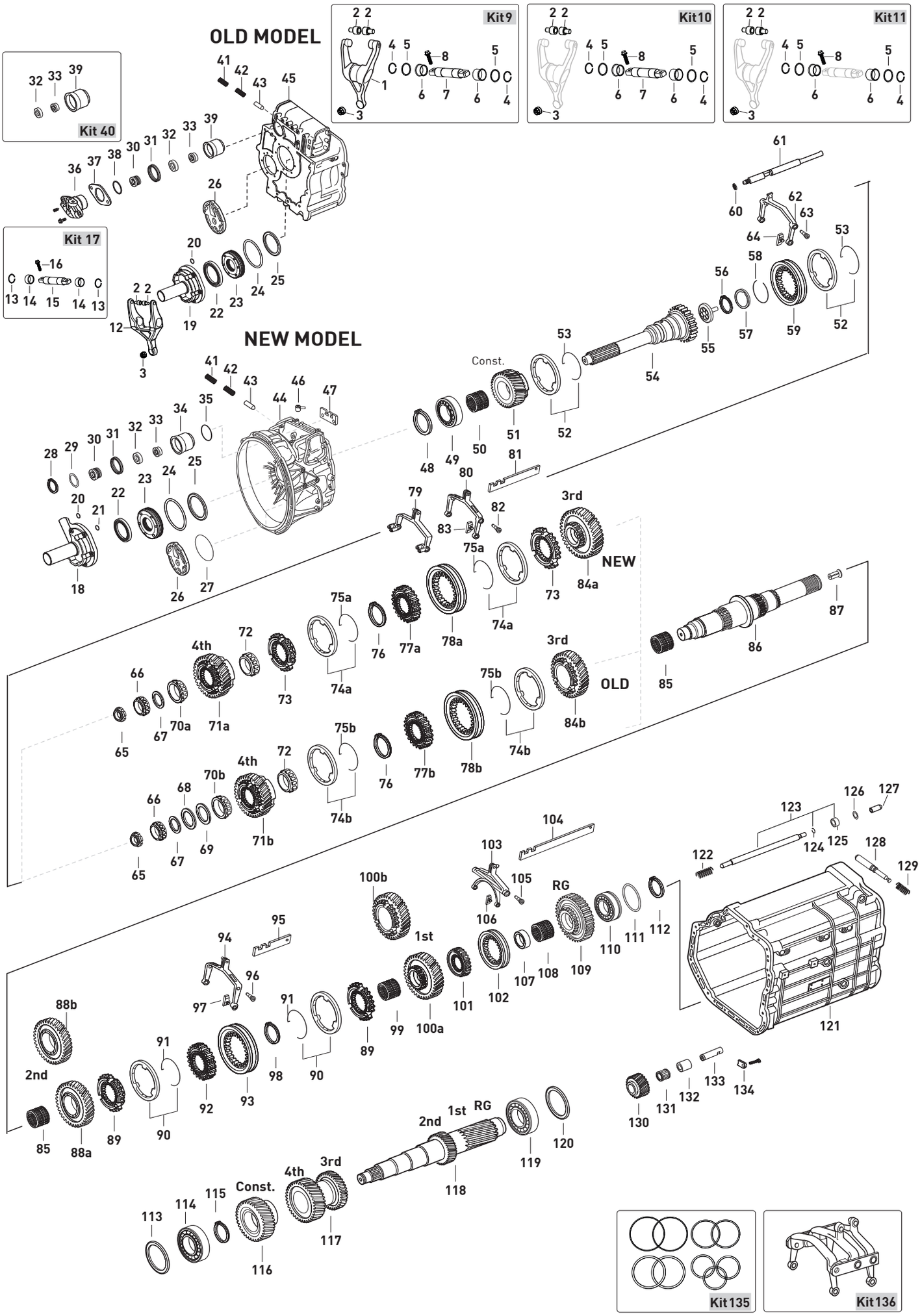






Original parts names, oem numbers, symbols and descriptions used in this catalogue are for reference purposes only.

| Fig. | Kacmaz No | Oem No | Oem Old No | Pcs. | Ürün Tanımı | Description | Sizes | Not | 715520 | 715521 | 715527 | 715260 | 715261 | 715400 | 715410 | 715411 |
|---|---|---|---|---|---|---|---|---|---|---|---|---|---|---|---|---|
| 50 | K21.03815 | 016 981 0010 | (018 981 8710) | 1 | TAKVİYE DİŞLİ MASURA BİLYA | NEEDLE CAGE | 89X97X40mm | | ♦ | ♦ | ♦ | ♦ | ♦ | ♦ | ♦ | ♦ |
| 51 | K21.03030 | 945 262 4110 | (945 262 1610) | 1 | TAKVİYE DİŞLİSİ 32 DİŞ | CONSTANT GEAR 32 T. | | (1) | ♦ | ♦ | ♦ | ♦ | ♦ | ♦ | ♦ | ♦ |
| | | | (945 262 0010) | | | | | | | | | | | | | |
| | | | (389 262 6310) | | | | | | | | | | | | | |
| | | | (945 262 1110) | | | | | | | | | | | | | |
| 51 | K21.03130 | 945 262 9817 | (945 262 5417) | 1 | TAKVİYE DİŞLİSİ 32 DİŞ | CONSTANT GEAR 32 T. | | (2) | ♦ | ♦ | ♦ | | | | | |
| | | | (945 262 7517) | | | | | | | | | | | | | |
| | | | (945 262 7617) | | | | | | | | | | | | | |
| 51 | K21.03131 | 945 262 4710 | (389 262 3910) | 1 | TAKVİYE DİŞLİSİ 39 DİŞ | CONSTANT GEAR 39 T. | | (3) | ♦ | ♦ | | | | | | |
| | | | (945 262 0210) | | | | | | | | | | | | | |
| 52 | K21.03015 | 389 262 0637 | (387 262 0837) | 2 | TAKVİYE FRENLEME (Mo) | SYNCHRONIZING CONE/Mo | | (1)(3) | ♦ | ♦ | ♦ | ♦ | ♦ | ♦ | ♦ | ♦ |
| | | | (389 262 1037) | | | | | | | | | | | | | |
| 52 | K21.03401 | 945 260 0450 | | 2 | TAKVİYE FRENLEME (C) | SYNCHRONIZING CONE/C | | (1)(3) | ♦ | ♦ | ♦ | ♦ | ♦ | ♦ | ♦ | ♦ |
| 52 | K21.03136 | 945 260 2245 | (946 262 6337) | 2 | TAKVİYE FRENLEME (Mo) | SYNCHRONIZING CONE/Mo | | (2) | ♦ | ♦ | ♦ | | | | | |
| 52 | K21.06274 | 947 260 2845 | (947 260 0545) | 2 | TAKVİYE FRENLEME (C) | SYNCHRONIZING CONE/C | | (2) | ♦ | ♦ | ♦ | | | | | |
| 53 | K21.03044 | 387 262 1093 | (387 262 0693) | 2 | FRENLEME TELİ | SPRING | | | ♦ | ♦ | ♦ | ♦ | ♦ | ♦ | ♦ | ♦ |
| | | | (960 262 1393) | | | | | | | | | | | | | |
| 54 | K21.03047 | 389 262 8301 | (945 262 0303) | 1 | PRİZDİREK 60 DİŞ | INPUT SHAFT 60 T. | | | ♦ | ♦ | ♦ | | | | | |
| | | | (389 262 6301) | | | | | | | | | | | | | |
| 54 | K21.03454 | 945 262 4603 | | 1 | PRİZDİREK 60 DİŞ | INPUT SHAFT 60 T. | | (PTO) | ♦ | ♦ | | | | | | |
| 54 | K21.03231 | 945 262 6203 | (945 262 1103) | 1 | PRİZDİREK 60 DİŞ | INPUT SHAFT 60 T. | | (PTO) | ♦ | ♦ | | | | | | |
| 54 | K21.03219 | 945 262 4403 | (945 262 1001) | 1 | PRİZDİREK 60 DİŞ | INPUT SHAFT 60 T. | | (WSK) | ♦ | ♦ | | | | ♦ | ♦ | ♦ |
| | | | (945 262 0703) | | | | | | | | | | | | | |
| | | | (389 262 0003) | | | | | | | | | | | | | |
| | | | (389 262 5601) | | | | | | | | | | | | | |
| 54 | K21.03049 | 389 262 6601 | | 1 | PRİZDİREK 60 DİŞ | INPUT SHAFT 60 T. | | | | | | ♦ | ♦ | | | |
| 54 | K21.03143 | 389 262 5101 | | 1 | PRİZDİREK 60 DİŞ | INPUT SHAFT 60 T. | | | | | | ♦ | | | | |
| 55 | K21.04001 | 976 269 0034 | (960 269 0434) | 1 | PRİZDİREK YAĞ PİPETİ | OIL COLLECTOR | | (K) | ♦ | ♦ | ♦ | ♦ | ♦ | ♦ | ♦ | ♦ |
| 55 | K21.04085 | 389 269 8534 | | 1 | PRİZDİREK YAĞ PİPETİ | OIL COLLECTOR | | (L) | ♦ | ♦ | ♦ | ♦ | ♦ | ♦ | ♦ | ♦ |
| 56 | K21.04002 | 000 994 9841 | | 1 | PRİZDİREK YAĞ PİPETİ SEKMANI | RETAINING RING | | (K) | ♦ | ♦ | ♦ | ♦ | ♦ | ♦ | ♦ | ♦ |
| 56 | K21.04086 | 007993 050200 | | 1 | PRİZDİREK YAĞ PİPETİ SEKMANI | RETAINING RING | | (L) | ♦ | ♦ | ♦ | ♦ | ♦ | ♦ | ♦ | ♦ |
| 57 | K21.03510 | 001 262 0362 | (000 262 8762) | 1 | PRİZDİREK ARKA KEÇE | OIL SEAL | 78,5X105X7mm | | ♦ | ♦ | ♦ | ♦ | ♦ | ♦ | ♦ | ♦ |
| | | | (000 262 9162) | | | | | | | | | | | | | |
| 57 | K21.03522 | 018 997 7547 | (018 997 7147) | 1 | PRİZDİREK ARKA KEÇE | OIL SEAL | 80X104X10mm | | | | | ♦ | ♦ | ♦ | ♦ | ♦ |
| 58 | K21.04146 | 389 262 0973 | (945 262 0073) | 1 | PRİZDİREK KEÇE SEKMANI | LOCK RING | | | ♦ | ♦ | ♦ | ♦ | ♦ | ♦ | ♦ | ♦ |
| 59 | K21.03002 | 945 262 2823 | (945 262 0323) | 1 | TAKVİYE HALKA | ENGAGING SLEEVE | | (1)(3) | ♦ | ♦ | ♦ | ♦ | ♦ | ♦ | ♦ | ♦ |
| | | | (945 262 0623) | | | | | | | | | | | | | |
| | | | (389 262 4123) | | | | | | | | | | | | | |
| 59 | K21.03137 | 945 262 6823 | (945 262 6423) | 1 | TAKVİYE HALKA | ENGAGING SLEEVE | | (2) | ♦ | ♦ | ♦ | | | | | |
| 60 | K21.04160 | 387 263 2652 | | 1 | TAKVİYE HİLAL MİL PULU | SPACER WASHER | 0,20mm | | ♦ | ♦ | ♦ | ♦ | ♦ | ♦ | ♦ | ♦ |
| 60 | K21.04161 | 387 263 2752 | | 1 | TAKVİYE HİLAL MİL PULU | SPACER WASHER | 0,40mm | | ♦ | ♦ | ♦ | ♦ | ♦ | ♦ | ♦ | ♦ |
| 60 | | 387 263 2852 | | 1 | TAKVİYE HİLAL MİL PULU | SPACER WASHER | 0,60mm | | ♦ | ♦ | ♦ | ♦ | ♦ | ♦ | ♦ | ♦ |
| 60 | | 387 263 3052 | | 1 | TAKVİYE HİLAL MİL PULU | SPACER WASHER | 1,00mm | | ♦ | ♦ | ♦ | ♦ | ♦ | ♦ | ♦ | ♦ |
| 61 | K21.07003 | 945 267 0017 | | 1 | TAKVİYE HİLAL MİLİ | GEAR SHIFT RAIL | | | ♦ | ♦ | ♦ | | | | | |
| 61 | | 945 267 0617 | | 1 | TAKVİYE HİLAL MİLİ | GEAR SHIFT RAIL | | | ♦ | ♦ | | | | | | |
| 61 | | 945 267 0217 | | 1 | TAKVİYE HİLAL MİLİ | GEAR SHIFT RAIL | | | | | ♦ | | | | | |
| 61 | | 945 267 0117 | | 1 | TAKVİYE HİLAL MİLİ | GEAR SHIFT RAIL | | | | | | | | ♦ | ♦ | ♦ |
| 61 | | 389 267 2017 | | 1 | TAKVİYE HİLAL MİLİ | GEAR SHIFT RAIL | | | | | | | ♦ | | | |
| 61 | | 389 267 2217 | | 1 | TAKVİYE HİLAL MİLİ | GEAR SHIFT RAIL | | | | | | ♦ | | | | |
| 62 | K21.06410 | 945 265 0001 | | 1 | TAKVİYE HİLALİ | GEAR SHIFT FORK | | | ♦ | ♦ | ♦ | | | | | |
| 62 | | 389 265 1201 | | 1 | TAKVİYE HİLALİ | GEAR SHIFT FORK | | | | | | ♦ | ♦ | ♦ | ♦ | ♦ |
| 63 | K21.04307 | 960 265 0774 | (945 265 1274) | 2 | HİLAL CİVATASI | PIN | | | ♦ | ♦ | ♦ | | | | | |
| | | | (945 265 2974) | | | | | | | | | | | | | |

NOTES :
Parts encoded alphabetic and numaric are used together.

GEARBOX TYPE:
715520 - 715521 - 715527 - G240 - 16 /11,7 - 0,69 NEW
715260 - G240 - 16 /11,7 - 0,69 EPS
715261 - 715400 - 715410 - 715411 - G240 - 16 /11,7 - 0,69 OLD

NOTLAR :
Alfabetik ve rakam ile kodlanan parçalar birlikte kullanılır.

ŞANZIMAN TİPLERİ:
715520 - 715521 - 715527 - G240 - 16 /11,7 - 0,69 NEW
715260 - G240 - 16 /11,7 - 0,69 EPS
715261 - 715400 - 715410 - 715411 - G240 - 16 /11,7 - 0,69 OLD





Original parts names, oem numbers, symbols and descriptions used in this catalogue are for reference purposes only.

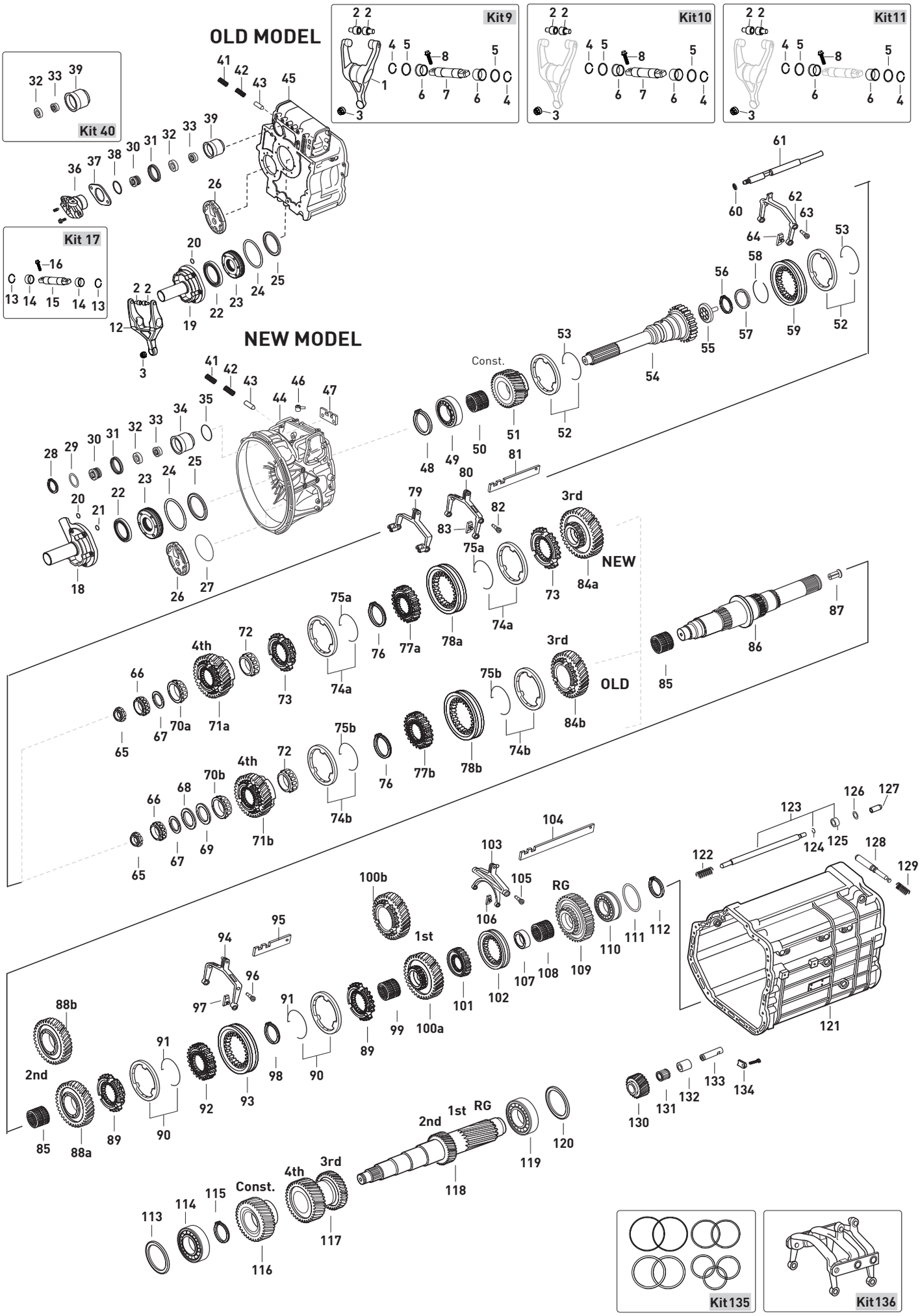






Original parts names, oem numbers, symbols and descriptions used in this catalogue are for reference purposes only.

| Fig. | Kacmaz No | Oem No | Oem Old No | Pcs. | Ürün Tanımı | Description | Sizes | Not | 715520 | 715521 | 715527 | 715260 | 715261 | 715400 | 715410 | 715411 |
|---|---|---|---|---|---|---|---|---|---|---|---|---|---|---|---|---|
| 63 | | 389 265 1674 | | 2 | TAKVİYE HİLAL CİVATASI | SCREW | | | | | | ♦ | ♦ | ♦ | ♦ | ♦ |
| 64 | K21.03431 | 960 265 0049 | (947 265 0349) | 2 | TAKVİYE HİLAL PABUCU | SLIDING PAD | | | ♦ | ♦ | ♦ | ♦ | ♦ | ♦ | ♦ | ♦ |
| | | | (389 265 2749) | | | | | | | | | | | | | |
| 65 | K21.03432 | 945 990 0250 | (945 990 0150) | 1 | KAMALI MİL SOMUNU | NUT | M30X1,5 | | ♦ | ♦ | ♦ | ♦ | ♦ | ♦ | ♦ | ♦ |
| 66 | K21.03619 | 015 981 1605 | (013 981 1105) | 1 | KAMALI MİL UÇ BİLYA | ROLLER BEARING | 39,69X40,39mm | | ♦ | ♦ | ♦ | ♦ | ♦ | ♦ | ♦ | ♦ |
| 67 | K21.04120 | 389 262 5552 | | 1 | KAMALI MİL UÇ BİLYA ALT PULU | THRUST WASHER | 1,20mm | | | | | ♦ | ♦ | ♦ | ♦ | ♦ |
| 67 | K21.04149 | | | 1 | KAMALI MİL UÇ BİLYA ALT PULU | THRUST WASHER | 1,10mm | | | | | ♦ | ♦ | ♦ | ♦ | ♦ |
| 67 | K21.04148 | | | 1 | KAMALI MİL UÇ BİLYA ALT PULU | THRUST WASHER | 1,00mm | | | | | ♦ | ♦ | ♦ | ♦ | ♦ |
| 67 | K21.04147 | | | 1 | KAMALI MİL UÇ BİLYA ALT PULU | THRUST WASHER | 0,90mm | | | | | ♦ | ♦ | ♦ | ♦ | ♦ |
| 67 | K21.04121 | 389 262 5652 | | 1 | KAMALI MİL UÇ BİLYA ALT PULU | THRUST WASHER | 0,80 mm | | | | | ♦ | ♦ | ♦ | ♦ | ♦ |
| 67 | K21.04128 | 389 262 2954 | | 1 | KAMALI MİL UÇ BİLYA ALT PULU | THRUST WASHER | 0,70mm | | | | | ♦ | ♦ | ♦ | ♦ | ♦ |
| 67 | K21.04129 | 389 262 3054 | | 1 | KAMALI MİL UÇ BİLYA ALT PULU | THRUST WASHER | 0,60mm | | | | | ♦ | ♦ | ♦ | ♦ | ♦ |
| 67 | K21.04122 | 389 262 5752 | | 1 | KAMALI MİL UÇ BİLYA ALT PULU | THRUST WASHER | 0,50mm | | | | | ♦ | ♦ | ♦ | ♦ | ♦ |
| 67 | K21.04130 | 389 262 7954 | | 1 | KAMALI MİL UÇ BİLYA ALT PULU | THRUST WASHER | 0,30mm | | | | | ♦ | ♦ | ♦ | ♦ | ♦ |
| 67 | K21.04123 | 389 262 5852 | | 1 | KAMALI MİL UÇ BİLYA ALT PULU | THRUST WASHER | 0,20mm | | | | | ♦ | ♦ | ♦ | ♦ | ♦ |
| 67 | K21.04124 | 389 262 5952 | | 1 | KAMALI MİL UÇ BİLYA ALT PULU | THRUST WASHER | 0,10mm | | | | | ♦ | ♦ | ♦ | ♦ | ♦ |
| 68 | K21.04024 | 389 262 3352 | | 1 | 4.VİTES ÖN BİLYA AYAR PULU | THRUST WASHER | 2,50mm | | ♦ | ♦ | ♦ | ♦ | ♦ | ♦ | ♦ | ♦ |
| 68 | K21.04025 | 389 262 3252 | | 1 | 4.VİTES ÖN BİLYA AYAR PULU | THRUST WASHER | 2,00mm | | ♦ | ♦ | ♦ | ♦ | ♦ | ♦ | ♦ | ♦ |
| 68 | K21.04026 | 389 262 3152 | | 1 | 4.VİTES ÖN BİLYA AYAR PULU | THRUST WASHER | 1,95mm | | ♦ | ♦ | ♦ | ♦ | ♦ | ♦ | ♦ | ♦ |
| 68 | K21.04027 | 389 262 3052 | | 1 | 4.VİTES ÖN BİLYA AYAR PULU | THRUST WASHER | 1,90mm | | ♦ | ♦ | ♦ | ♦ | ♦ | ♦ | ♦ | ♦ |
| 68 | K21.04028 | 389 262 2952 | | 1 | 4.VİTES ÖN BİLYA AYAR PULU | THRUST WASHER | 1,85mm | | ♦ | ♦ | ♦ | ♦ | ♦ | ♦ | ♦ | ♦ |
| 68 | K21.04092 | 389 262 2455 | | 1 | 4.VİTES ÖN BİLYA AYAR PULU | THRUST WASHER | 1,82mm | | ♦ | ♦ | ♦ | ♦ | ♦ | ♦ | ♦ | ♦ |
| 68 | K21.04093 | 389 262 2355 | | 1 | 4.VİTES ÖN BİLYA AYAR PULU | THRUST WASHER | 1,79mm | | ♦ | ♦ | ♦ | ♦ | ♦ | ♦ | ♦ | ♦ |
| 68 | K21.04094 | 389 262 2255 | | 1 | 4.VİTES ÖN BİLYA AYAR PULU | THRUST WASHER | 1,76mm | | ♦ | ♦ | ♦ | ♦ | ♦ | ♦ | ♦ | ♦ |
| 68 | K21.04095 | 389 262 2155 | | 1 | 4.VİTES ÖN BİLYA AYAR PULU | THRUST WASHER | 1,73mm | | ♦ | ♦ | ♦ | ♦ | ♦ | ♦ | ♦ | ♦ |
| 68 | K21.04096 | 389 262 2055 | | 1 | 4.VİTES ÖN BİLYA AYAR PULU | THRUST WASHER | 1,67mm | | ♦ | ♦ | ♦ | ♦ | ♦ | ♦ | ♦ | ♦ |
| 68 | K21.04097 | 389 262 1955 | | 1 | 4.VİTES ÖN BİLYA AYAR PULU | THRUST WASHER | 1,64mm | | ♦ | ♦ | ♦ | ♦ | ♦ | ♦ | ♦ | ♦ |
| 68 | K21.04098 | 389 262 1855 | | 1 | 4.VİTES ÖN BİLYA AYAR PULU | THRUST WASHER | 1,61mm | | ♦ | ♦ | ♦ | ♦ | ♦ | ♦ | ♦ | ♦ |
| 68 | K21.04099 | 389 262 1755 | | 1 | 4.VİTES ÖN BİLYA AYAR PULU | THRUST WASHER | 1,58mm | | ♦ | ♦ | ♦ | ♦ | ♦ | ♦ | ♦ | ♦ |
| 68 | K21.04100 | 389 262 2352 | | 1 | 4.VİTES ÖN BİLYA AYAR PULU | THRUST WASHER | 1,55mm | | ♦ | ♦ | ♦ | ♦ | ♦ | ♦ | ♦ | ♦ |
| 68 | K21.04101 | 389 262 1655 | | 1 | 4.VİTES ÖN BİLYA AYAR PULU | THRUST WASHER | 1,52mm | | ♦ | ♦ | ♦ | ♦ | ♦ | ♦ | ♦ | ♦ |
| 68 | K21.04102 | 389 262 1555 | | 1 | 4.VİTES ÖN BİLYA AYAR PULU | THRUST WASHER | 1,49mm | | ♦ | ♦ | ♦ | ♦ | ♦ | ♦ | ♦ | ♦ |
| 68 | K21.04103 | 389 262 1455 | | 1 | 4.VİTES ÖN BİLYA AYAR PULU | THRUST WASHER | 1,46mm | | ♦ | ♦ | ♦ | ♦ | ♦ | ♦ | ♦ | ♦ |
| 68 | K21.04104 | 389 262 1355 | | 1 | 4.VİTES ÖN BİLYA AYAR PULU | THRUST WASHER | 1,43mm | | ♦ | ♦ | ♦ | ♦ | ♦ | ♦ | ♦ | ♦ |
| 68 | K21.04105 | 389 262 2052 | | 1 | 4.VİTES ÖN BİLYA AYAR PULU | THRUST WASHER | 1,40mm | | ♦ | ♦ | ♦ | ♦ | ♦ | ♦ | ♦ | ♦ |
| 68 | K21.04106 | 389 262 1952 | | 1 | 4.VİTES ÖN BİLYA AYAR PULU | THRUST WASHER | 1,35mm | | ♦ | ♦ | ♦ | ♦ | ♦ | ♦ | ♦ | ♦ |
| 68 | K21.04107 | 389 262 2754 | | 1 | 4.VİTES ÖN BİLYA AYAR PULU | THRUST WASHER | 1,30mm | | ♦ | ♦ | ♦ | ♦ | ♦ | ♦ | ♦ | ♦ |
| 68 | K21.04108 | 389 262 3654 | | 1 | 4.VİTES ÖN BİLYA AYAR PULU | THRUST WASHER | 1,25mm | | ♦ | ♦ | ♦ | ♦ | ♦ | ♦ | ♦ | ♦ |
| 68 | K21.04109 | 389 262 3554 | | 1 | 4.VİTES ÖN BİLYA AYAR PULU | THRUST WASHER | 1,20mm | | ♦ | ♦ | ♦ | ♦ | ♦ | ♦ | ♦ | ♦ |
| 68 | K21.04110 | 389 262 3454 | | 1 | 4.VİTES ÖN BİLYA AYAR PULU | THRUST WASHER | 1,15mm | | ♦ | ♦ | ♦ | ♦ | ♦ | ♦ | ♦ | ♦ |
| 68 | K21.04111 | 389 262 3354 | | 1 | 4.VİTES ÖN BİLYA AYAR PULU | THRUST WASHER | 1,10mm | | ♦ | ♦ | ♦ | ♦ | ♦ | ♦ | ♦ | ♦ |
| 68 | K21.04112 | 389 262 3254 | | 1 | 4.VİTES ÖN BİLYA AYAR PULU | THRUST WASHER | 1,05mm | | ♦ | ♦ | ♦ | ♦ | ♦ | ♦ | ♦ | ♦ |
| 68 | K21.04113 | 389 262 2854 | | 1 | 4.VİTES ÖN BİLYA AYAR PULU | THRUST WASHER | 0,50mm | | ♦ | ♦ | ♦ | ♦ | ♦ | ♦ | ♦ | ♦ |
| 68 | K21.94113 | | | 1 | 4.VİTES ÖN BİLYA AYAR PULU | THRUST WASHER | 0,40mm | | ♦ | ♦ | ♦ | ♦ | ♦ | ♦ | ♦ | ♦ |
| 68 | K21.84113 | | | 1 | 4.VİTES ÖN BİLYA AYAR PULU | THRUST WASHER | 0,30mm | | ♦ | ♦ | ♦ | ♦ | ♦ | ♦ | ♦ | ♦ |
| 68 | K21.74113 | | | 1 | 4.VİTES ÖN BİLYA AYAR PULU | THRUST WASHER | 0,20mm | | ♦ | ♦ | ♦ | ♦ | ♦ | ♦ | ♦ | ♦ |
| 68 | K21.64113 | | | 1 | 4.VİTES ÖN BİLYA AYAR PULU | THRUST WASHER | 0,10mm | | ♦ | ♦ | ♦ | ♦ | ♦ | ♦ | ♦ | ♦ |
| 69 | K21.04010 | 389 262 2351 | | 1 | 4.VİTES ÖN BİLYA AYAR PULU | THRUST WASHER | 7,00mm | | ♦ | ♦ | | | | | | |
| 70a | K21.03620 | 017 981 5105 | (015 981 6105) | 1 | 4.VİTES DİŞLİSİ ÖN BİLYA | ROLLER BEARING | 50X41,3mm | | ♦ | ♦ | ♦ | | | | | |
| | | | (014 981 2605) | | | | | | | | | | | | | |
| 70b | K21.03621 | 012 981 9905 | (012 981 0505) | 1 | 4.VİTES DİŞLİSİ ÖN BİLYA | ROLLER BEARING | 50X36mm | | ♦ | ♦ | ♦ | ♦ | ♦ | ♦ | ♦ | ♦ |
| 71a | K21.03221 | 389 262 7910 | (945 262 2810) | 1 | 4.VİTES DİŞLİSİ 36 DİŞ | GEAR 4th 36 T. | | (1) | ♦ | ♦ | ♦ | ♦ | ♦ | ♦ | ♦ | ♦ |
| 71a | K21.03220 | 945 262 9517 | (945 262 5617) | 1 | 4.VİTES DİŞLİSİ 36 DİŞ | GEAR 4th 36 T. | | (2) | ♦ | ♦ | ♦ | | | | | |

NOTES :
Parts encoded alphabetic and numaric are used together.

GEARBOX TYPE:
715520 - 715521 - 715527 - G240 - 16 /11,7 - 0,69 NEW
715260 - G240 - 16 /11,7 - 0,69 EPS
715261 - 715400 - 715410 - 715411 - G240 - 16 /11,7 - 0,69 OLD

NOTLAR :
Alfabetik ve rakam ile kodlanan parçalar birlikte kullanılır.

ŞANZIMAN TİPLERİ:
715520 - 715521 - 715527 - G240 - 16 /11,7 - 0,69 NEW
715260 - G240 - 16 /11,7 - 0,69 EPS
715261 - 715400 - 715410 - 715411 - G240 - 16 /11,7 - 0,69 OLD





Original parts names, oem numbers, symbols and descriptions used in this catalogue are for reference purposes only.

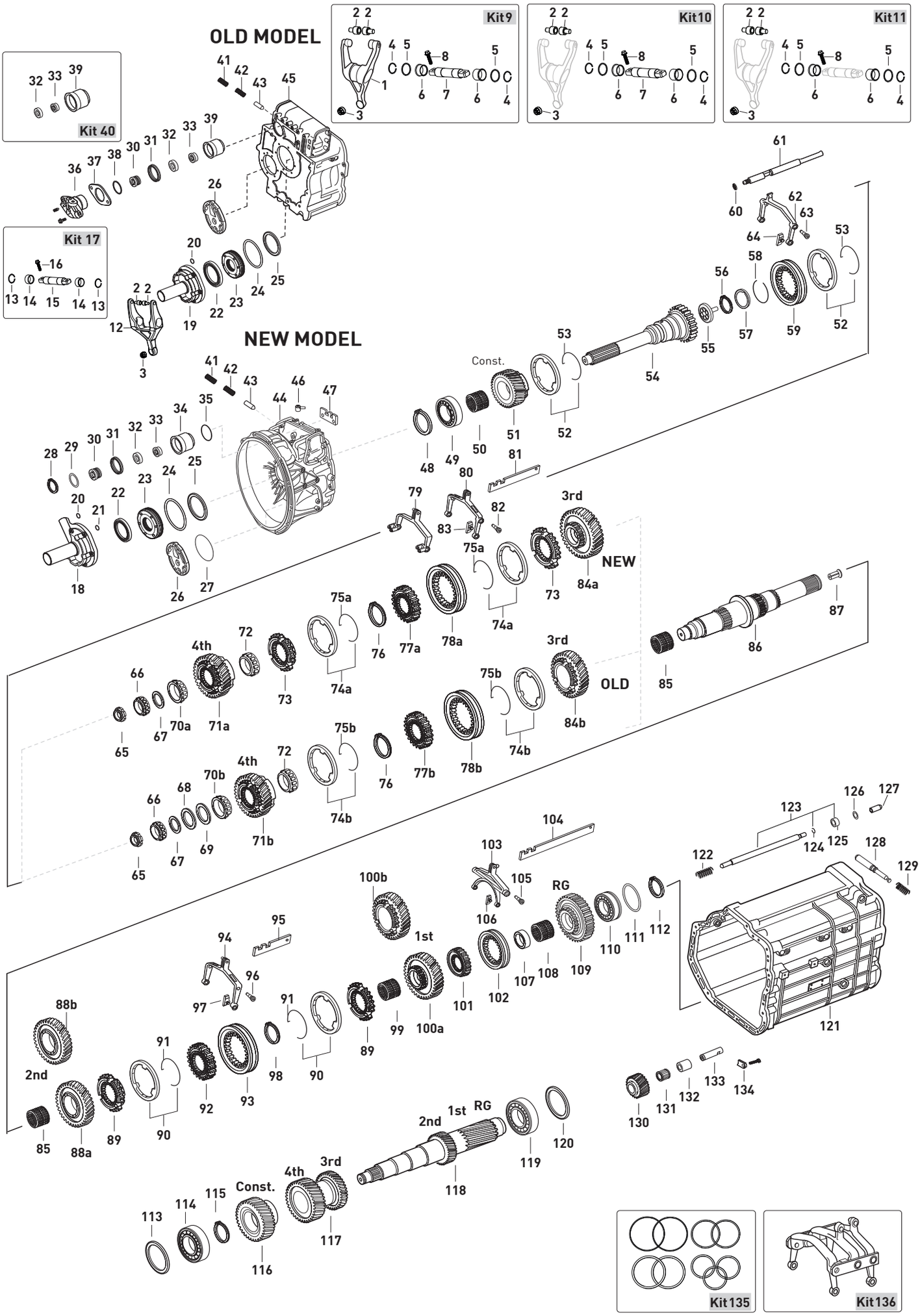






Original parts names, oem numbers, symbols and descriptions used in this catalogue are for reference purposes only.

| Fig. | Kacmaz No | Oem No | Oem Old No | Pcs. | Ürün Tanımı | Description | Sizes | Not | 715520 | 715521 | 715527 | 715260 | 715261 | 715400 | 715410 | 715411 |
|---|---|---|---|---|---|---|---|---|---|---|---|---|---|---|---|---|
| 71b | K21.03222 | 389 262 3810 | | 1 | 4.VİTES DİŞLİSİ 36 DİŞ | GEAR 4th 36 T. | | (D) | | | | ♦ | ♦ | ♦ | ♦ | ♦ |
| 72 | K21.03622 | 015 981 6205 | (015 981 8105) | 1 | 4.VİTES DİŞLİSİ ARKA BİLYA | ROLLER BEARING | 55X29,8mm | | ♦ | ♦ | ♦ | ♦ | ♦ | ♦ | ♦ | ♦ |
| 73 | K21.03027 | 945 262 0534 | (389 262 5034) | 2 | 3./4.VİTES SENKROMENÇ | ENGAGING RING | | (1) | ♦ | ♦ | ♦ | ♦ | ♦ | ♦ | ♦ | ♦ |
| 73 | K21.03146 | 945 262 8234 | (945 262 5434) | 2 | 3./4.VİTES SENKROMENÇ | ENGAGING RING | | (2) | ♦ | ♦ | ♦ | | | | | |
| 74a | K21.03016 | 389 262 0737 | (387 262 0937) | 2 | 3./4.VİTES FRENLEME (Mo) | SYNCHRONIZING CONE/Mo | | (1) | ♦ | ♦ | ♦ | ♦ | ♦ | ♦ | ♦ | ♦ |
| | | | (389 262 1137) | | | | | | | | | | | | | |
| 74a | K21.06041 | 945 260 0650 | | 2 | 3./4.VİTES FRENLEME (C) | SYNCHRONIZING CONE/C | | (1) | ♦ | ♦ | ♦ | ♦ | ♦ | ♦ | ♦ | ♦ |
| 74a | K21.03148 | 947 260 1945 | (947 260 4645) | 2 | 3./4.VİTES FRENLEME (Mo) | SYNCHRONIZING CONE/Mo | | (2) | ♦ | ♦ | ♦ | | | | | |
| | | | (946 262 6137) | | | | | | | | | | | | | |
| 74a | K21.06299 | 947 260 3545 | (947 260 5145) | 2 | 3./4.VİTES FRENLEME (C) | SYNCHRONIZING CONE/C | | (2) | ♦ | ♦ | ♦ | | | | | |
| | | | (947 260 2945) | | | | | | | | | | | | | |
| | | | (947 260 0745) | | | | | | | | | | | | | |
| 74b | K21.03015 | 389 262 0637 | (387 262 0837) | 2 | 3./4.VİTES FRENLEME (Mo) | SYNCHRONIZING CONE/Mo | | (D) | | | | ♦ | ♦ | ♦ | ♦ | ♦ |
| | | | (389 262 1037) | | | | | | | | | | | | | |
| 75a | K21.03055 | 387 262 0893 | (387 262 0793) | 2 | FRENLEME TELİ | SPRING | | (1)(2) | ♦ | ♦ | ♦ | ♦ | ♦ | ♦ | ♦ | ♦ |
| 75b | K21.03044 | 387 262 1093 | (387 262 0693) | 2 | FRENLEME TELİ | SPRING | | (D) | | | | ♦ | ♦ | ♦ | ♦ | ♦ |
| | | | (960 262 1393) | | | | | | | | | | | | | |
| 76 | K21.04343 | 387 262 2073 | | 1 | 3./4.VİTES YILDIZ DİŞLİ SEKMANI | RETAINING RING | 2,40mm | | ♦ | ♦ | ♦ | ♦ | ♦ | ♦ | ♦ | ♦ |
| 76 | K21.06687 | 387 262 2173 | | 1 | 3./4.VİTES YILDIZ DİŞLİ SEKMANI | RETAINING RING | 2,45mm | | ♦ | ♦ | ♦ | ♦ | ♦ | ♦ | ♦ | ♦ |
| 76 | K21.04342 | 007 994 0041 | (387 262 2273) | 1 | 3./4.VİTES YILDIZ DİŞLİ SEKMANI | RETAINING RING | 2,50mm | | ♦ | ♦ | ♦ | ♦ | ♦ | ♦ | ♦ | ♦ |
| 76 | K21.04359 | 387 262 2373 | | 1 | 3./4.VİTES YILDIZ DİŞLİ SEKMANI | RETAINING RING | 2,55mm | | ♦ | ♦ | ♦ | ♦ | ♦ | ♦ | ♦ | ♦ |
| 76 | K21.04345 | 387 262 2473 | | 1 | 3./4.VİTES YILDIZ DİŞLİ SEKMANI | RETAINING RING | 2,60mm | | ♦ | ♦ | ♦ | ♦ | ♦ | ♦ | ♦ | ♦ |
| 76 | K21.07021 | 387 262 2573 | | 1 | 3./4.VİTES YILDIZ DİŞLİ SEKMANI | RETAINING RING | 2,65mm | | ♦ | ♦ | ♦ | ♦ | ♦ | ♦ | ♦ | ♦ |
| 76 | K21.04344 | 387 262 7973 | | 1 | 3./4.VİTES YILDIZ DİŞLİ SEKMANI | RETAINING RING | 2,70mm | | ♦ | ♦ | ♦ | ♦ | ♦ | ♦ | ♦ | ♦ |
| 76 | K21.07022 | 387 262 8073 | | 1 | 3./4.VİTES YILDIZ DİŞLİ SEKMANI | RETAINING RING | 2,75mm | | ♦ | ♦ | ♦ | ♦ | ♦ | ♦ | ♦ | ♦ |
| 76 | K21.06588 | 387 262 8173 | | 1 | 3./4.VİTES YILDIZ DİŞLİ SEKMANI | RETAINING RING | 2,80mm | | ♦ | ♦ | ♦ | ♦ | ♦ | ♦ | ♦ | ♦ |
| 77a | K21.03149 | 389 262 4735 | (389 262 4635) | 1 | 3./4.VİTES YILDIZ DİŞLİ | SYNCHRONIZER HUB | | (1) (2) | ♦ | ♦ | ♦ | ♦ | ♦ | ♦ | ♦ | ♦ |
| 77b | K21.03150 | 389 262 2835 | | 1 | 3./4.VİTES YILDIZ DİŞLİ | SYNCHRONIZER HUB | | (D) | | | | ♦ | ♦ | ♦ | ♦ | ♦ |
| 78a | K21.03009 | 945 262 2723 | (945 262 0423) | 1 | 3./4.VİTES HALKA | ENGAGING SLEEVE | | (1) | ♦ | ♦ | ♦ | ♦ | ♦ | ♦ | ♦ | ♦ |
| | | | (389 262 2623) | | | | | | | | | | | | | |
| 78a | K21.03151 | 945 262 6523 | (930 262 0523) | 1 | 3./4.VİTES HALKA | ENGAGING SLEEVE | | (2) | ♦ | ♦ | ♦ | | | | | |
| 78b | K21.03002 | 945 262 2823 | (945 262 0323) | 1 | 3./4.VİTES HALKA | ENGAGING SLEEVE | | (D) | | | | ♦ | ♦ | ♦ | ♦ | ♦ |
| | | | (389 262 4123) | | | | | | | | | | | | | |
| | | | (389 262 2723) | | | | | | | | | | | | | |
| | | | (945 262 0623) | | | | | | | | | | | | | |
| 79 | K21.06428 | 945 260 0830 | | 1 | 3./ 4.VİTES HİLAL ARA PARÇA | SHIFTING FORK | | (1) (2) | ♦ | ♦ | ♦ | | | | | |
| 79 | | 389 260 4930 | | 1 | 3./ 4.VİTES HİLAL ARA PARÇA | SHIFTING FORK | | (D) | | | | ♦ | ♦ | ♦ | ♦ | ♦ |
| 80 | K21.06256 | 945 265 0402 | (945 265 3002) | 1 | 3./4.VİTES HİLALİ | GEAR SHIT FORK | | (1) (2) | ♦ | ♦ | ♦ | | | | | |
| 80 | | 389 265 1202 | | 1 | 3./4.VİTES HİLALİ | GEAR SHIT FORK | | (D) | | | | ♦ | ♦ | ♦ | ♦ | ♦ |
| 81 | K21.06576 | 945 265 0504 | | 1 | 3./4.VİTES HİLAL ÇITASI | SHIFTING ROD 3rd/4th | | (1) (2) | ♦ | ♦ | ♦ | | | | | |
| 81 | | 945 265 0604 | | 1 | 3./4.VİTES HİLAL ÇITASI | SHIFTING ROD 3rd/4th | | (1) (2) | ♦ | ♦ | | | | | | |
| 81 | | 389 265 8204 | | 1 | 3./4.VİTES HİLAL ÇITASI | SHIFTING ROD 3rd/4th | | (D) | | | | ♦ | ♦ | ♦ | ♦ | ♦ |
| 82 | K21.04308 | 960 265 0874 | (945 265 1374) | 2 | HİLAL CİVATASI | PIN | | | ♦ | ♦ | ♦ | ♦ | ♦ | ♦ | ♦ | ♦ |
| | | | (960 265 0674) | | | | | | | | | | | | | |
| 83 | K21.03431 | 960 265 0049 | (947 265 0349) | 2 | 3./ 4.VİTES HİLAL PABUCU | SLIDING PAD | | | ♦ | ♦ | ♦ | ♦ | ♦ | ♦ | ♦ | ♦ |
| | | | (389 265 2749) | | | | | | | | | | | | | |
| 84a | K21.03223 | 389 262 3713 | (945 262 3913) | 1 | 3.VİTES DİŞLİSİ 29 DİŞ | GEAR 3rd 29 T. | | | ♦ | ♦ | ♦ | | | | | |
| | | | (389 262 3013) | | | | | | | | | | | | | |
| 84b | K21.03224 | 389 260 5719 | | 1 | 3.VİTES DİŞLİSİ 29 DİŞ | GEAR 3rd 29 T. | | | | | | ♦ | ♦ | ♦ | ♦ | ♦ |
| 85 | K21.03810 | 018 981 6610 | (010 981 5310) | 2 | 2./3.VİTES MASURA BİLYA | NEEDLE CAGE | 85X93X53mm | | ♦ | ♦ | ♦ | ♦ | ♦ | ♦ | ♦ | ♦ |
| 86 | K21.03156 | 945 262 4505 | | 1 | KAMALI MİL | MAIN SHAFT | | (3) | ♦ | ♦ | ♦ | ♦ | ♦ | ♦ | ♦ | ♦ |
| 86 | K21.03029 | 945 262 3605 | (945 262 3505) | 1 | KAMALI MİL | MAIN SHAFT | | (4) | ♦ | ♦ | ♦ | ♦ | ♦ | ♦ | ♦ | ♦ |
| 86 | K21.06042 | 930 262 1205 | (930 262 2405) | 1 | KAMALI MİL | MAIN SHAFT | | (5) | ♦ | ♦ | ♦ | | | | | |

NOTES :
Parts encoded alphabetic and numaric are used together.

GEARBOX TYPE:
715520 - 715521 - 715527 - G240 - 16 /11,7 - 0,69 NEW
715260 - G240 - 16 /11,7 - 0,69 EPS
715261 - 715400 - 715410 - 715411 - G240 - 16 /11,7 - 0,69 OLD

NOTLAR :
Alfabetik ve rakam ile kodlanan parçalar birlikte kullanılır.

ŞANZIMAN TİPLERİ:
715520 - 715521 - 715527 - G240 - 16 /11,7 - 0,69 NEW
715260 - G240 - 16 /11,7 - 0,69 EPS
715261 - 715400 - 715410 - 715411 - G240 - 16 /11,7 - 0,69 OLD





Original parts names, oem numbers, symbols and descriptions used in this catalogue are for reference purposes only.

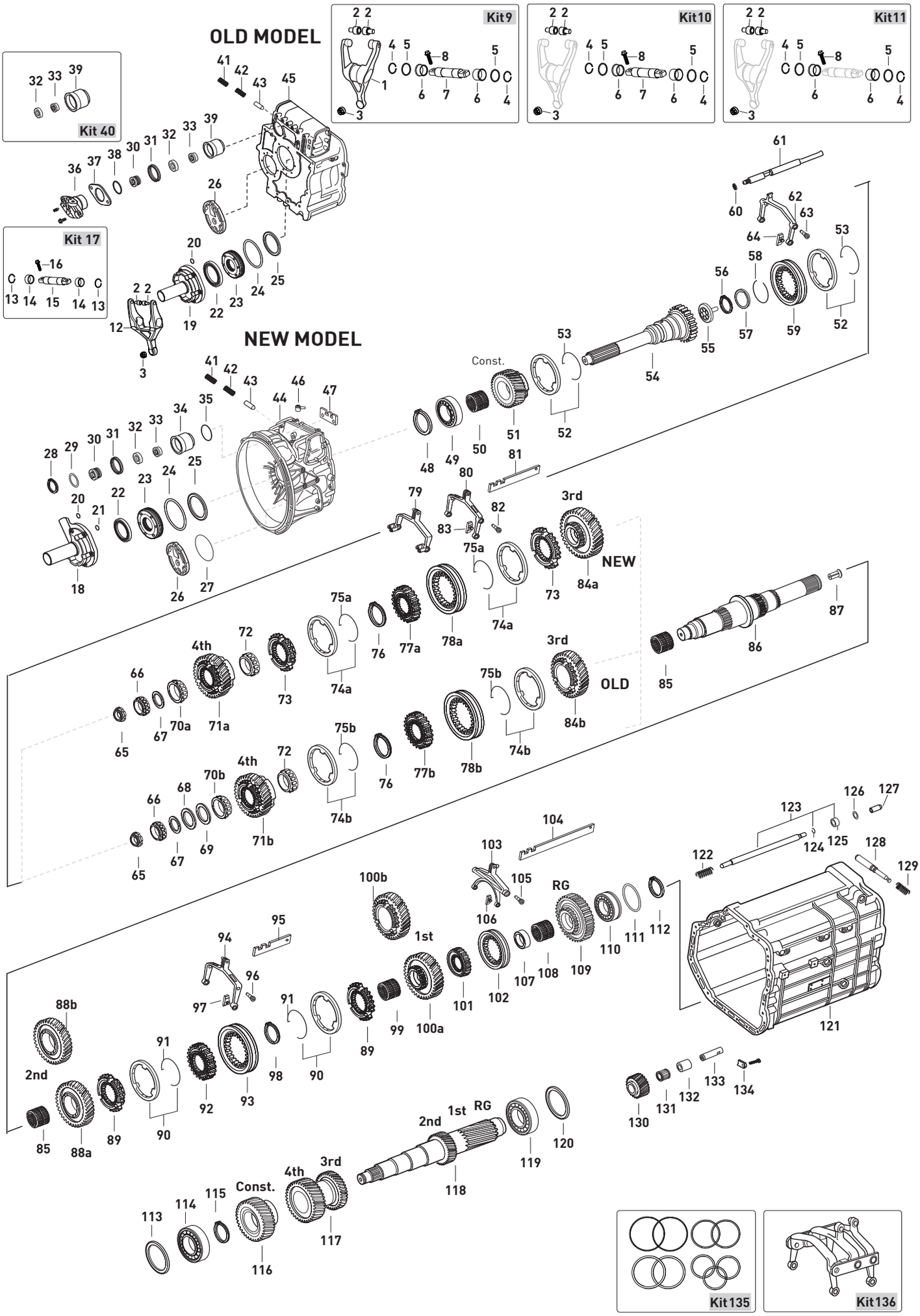






Original parts names, oem numbers, symbols and descriptions used in this catalogue are for reference purposes only.

| Fig. | Kacmaz No | Oem No | Oem Old No | Pcs. | Ürün Tanımı | Description | Sizes | Not | 715520 | 715521 | 715527 | 715260 | 715261 | 715400 | 715410 | 715411 |
|---|---|---|---|---|---|---|---|---|---|---|---|---|---|---|---|---|
| 86 | K21.03157 | 389 262 2405 | | 1 | KAMALI MİL | MAIN SHAFT | | (6) | | | | ♦ | ♦ | ♦ | ♦ | ♦ |
| 87 | K21.04364 | 001 990 2759 | | 1 | KAMALI MİL YAĞ BORUSU | OIL PIPE | | (5) | ♦ | ♦ | ♦ | | | | | |
| 88a | K21.03158 | 389 262 2812 | (389 262 2512) | 1 | 2.VİTES DİŞLİSİ 39 DİŞ | GEAR 2nd 39 T. | | | ♦ | ♦ | ♦ | ♦ | ♦ | ♦ | ♦ | ♦ |
| | | | (389 262 3712) | | | | | | | | | | | | | |
| | | | (945 262 3112) | | | | | | | | | | | | | |
| 88b | K21.03159 | 389 260 4919 | (389 262 2112) | 1 | 2.VİTES DİŞLİSİ 39 DİŞ | GEAR 2nd 39 T. | | | | | | ♦ | ♦ | ♦ | ♦ | ♦ |
| | | | (389 262 4734) | | | | | | | | | | | | | |
| 89 | K21.03025 | 945 262 0434 | (389 262 0034) | 2 | 1./2. VİTES SENKROMENÇ | ENGAGING RING | | (1) | ♦ | ♦ | ♦ | ♦ | ♦ | ♦ | ♦ | ♦ |
| 89 | K21.03160 | 945 262 5534 | | 2 | 1./2. VİTES SENKROMENÇ | ENGAGING RING | | (2) | ♦ | ♦ | ♦ | | | | | |
| 90 | K21.03016 | 389 262 0737 | (387 262 0937) | 2 | 1./2.VİTES FRENLEME (Mo) | SYNCHRONIZING CONE/Mo | | (1) | ♦ | ♦ | ♦ | ♦ | ♦ | ♦ | ♦ | ♦ |
| | | | (389 262 1137) | | | | | | | | | | | | | |
| 90 | K21.06041 | 945 260 0650 | | 2 | 1./2.VİTES FRENLEME (C) | SYNCHRONIZING CONE/C | | (1) | ♦ | ♦ | ♦ | ♦ | ♦ | ♦ | ♦ | ♦ |
| 90 | K21.03148 | 947 260 1945 | (947 260 4645) | 2 | 1./2.VİTES FRENLEME (Mo) | SYNCHRONIZING CONE/Mo | | (2) | ♦ | ♦ | ♦ | | | | | |
| | | | (946 262 6137) | | | | | | | | | | | | | |
| 90 | K21.06299 | 947 260 3545 | (947 260 5145) | 2 | 1./2.VİTES FRENLEME (C) | SYNCHRONIZING CONE/C | | | ♦ | ♦ | ♦ | | | | | |
| | | | (947 260 2945) | | | | | | | | | | | | | |
| | | | (947 260 0745) | | | | | | | | | | | | | |
| 91 | K21.03055 | 387 262 0893 | (387 262 0793) | 2 | FRENLEME TELİ | SPRING | | | ♦ | ♦ | ♦ | ♦ | ♦ | ♦ | ♦ | ♦ |
| 92 | K21.03161 | 389 262 2535 | (945 262 0135) | 1 | 1./2.VİTES YILDIZ DİŞLİ | SYNCHRONIZER HUB | | | ♦ | ♦ | ♦ | ♦ | ♦ | ♦ | ♦ | ♦ |
| 93 | K21.03009 | 945 262 2723 | (945 262 0423) | 1 | 1./2.VİTES HALKA | ENGAGING SLEEVE | | (1) | ♦ | ♦ | ♦ | ♦ | ♦ | ♦ | ♦ | ♦ |
| | | | (389 262 2623) | | | | | | | | | | | | | |
| 93 | K21.03151 | 945 262 6523 | (930 262 0523) | 1 | 1./2.VİTES HALKA | ENGAGING SLEEVE | | (2) | ♦ | ♦ | ♦ | | | | | |
| 94 | K21.06258 | 945 260 0230 | (945 260 0330) | 1 | 1./2.VİTES HİLALİ | SHIFTING FORK 1st/2nd | | (1)(2) | ♦ | ♦ | ♦ | | | | | |
| | | | (945 265 0301) | | | | | | | | | | | | | |
| 94 | | 389 260 3130 | | 1 | 1./2.VİTES HİLALİ | SHIFTING FORK 1st/2nd | | (D) | | | | ♦ | ♦ | ♦ | ♦ | ♦ |
| 95 | K21.06702 | 945 265 2704 | (945 265 0304) | 1 | 1./2.VİTES HİLAL ÇITASI | SHIFTING ROD 1st/2nd | | (1)(2) | ♦ | ♦ | ♦ | | | | | |
| | | | (945 265 1304) | | | | | | | | | | | | | |
| | | | (945 265 1204) | | | | | | | | | | | | | |
| 95 | | 945 265 1904 | | 1 | 1./2.VİTES HİLAL ÇITASI | SHIFTING ROD 1st/2nd | | (1)(2) | ♦ | | | | | | | |
| 95 | | 389 265 7804 | | 1 | 1./2.VİTES HİLAL ÇITASI | SHIFTING ROD 1st/2nd | | (D) | | | | ♦ | ♦ | ♦ | ♦ | ♦ |
| 96 | K21.04307 | 960 265 0774 | (945 265 1274) | 2 | 1./2.VİTES HİLAL CİVATASI | SCREW (SHORT) | | | ♦ | ♦ | ♦ | ♦ | ♦ | ♦ | ♦ | ♦ |
| | | | (945 265 2974) | | | | | | | | | | | | | |
| | | | (945 265 2774) | | | | | | | | | | | | | |
| 97 | K21.03431 | 960 265 0049 | (947 265 0349) | 2 | 3./ 4.VİTES HİLAL PABUCU | SLIDING PAD | | | ♦ | ♦ | ♦ | ♦ | ♦ | ♦ | ♦ | ♦ |
| | | | (389 265 2749) | | | | | | | | | | | | | |
| 98 | K21.04343 | 387 262 2073 | | 1 | 1./2.VİTES YILDIZ DİŞLİ SEKMANI | RETAINING RING | 2,40mm | | ♦ | ♦ | ♦ | ♦ | ♦ | ♦ | ♦ | ♦ |
| 98 | K21.06687 | 387 262 2173 | | 1 | 1./2.VİTES YILDIZ DİŞLİ SEKMANI | RETAINING RING | 2,45mm | | ♦ | ♦ | ♦ | ♦ | ♦ | ♦ | ♦ | ♦ |
| 98 | K21.04342 | 007 994 0041 | (387 262 2273) | 1 | 1./2.VİTES YILDIZ DİŞLİ SEKMANI | RETAINING RING | 2,50mm | | ♦ | ♦ | ♦ | ♦ | ♦ | ♦ | ♦ | ♦ |
| 98 | K21.04359 | 387 262 2373 | | 1 | 1./2.VİTES YILDIZ DİŞLİ SEKMANI | RETAINING RING | 2,55mm | | ♦ | ♦ | ♦ | ♦ | ♦ | ♦ | ♦ | ♦ |
| 98 | K21.04345 | 387 262 2473 | | 1 | 1./2.VİTES YILDIZ DİŞLİ SEKMANI | RETAINING RING | 2,60mm | | ♦ | ♦ | ♦ | ♦ | ♦ | ♦ | ♦ | ♦ |
| 98 | K21.07021 | 387 262 2573 | | 1 | 1./2.VİTES YILDIZ DİŞLİ SEKMANI | RETAINING RING | 2,65mm | | ♦ | ♦ | ♦ | ♦ | ♦ | ♦ | ♦ | ♦ |
| 98 | K21.04344 | 387 262 7973 | | 1 | 1./2.VİTES YILDIZ DİŞLİ SEKMANI | RETAINING RING | 2,70mm | | ♦ | ♦ | ♦ | ♦ | ♦ | ♦ | ♦ | ♦ |
| 98 | K21.07022 | 387 262 8073 | | 1 | 1./2.VİTES YILDIZ DİŞLİ SEKMANI | RETAINING RING | 2,75mm | | ♦ | ♦ | ♦ | ♦ | ♦ | ♦ | ♦ | ♦ |
| 98 | K21.06588 | 387 262 8173 | | 1 | 1./2.VİTES YILDIZ DİŞLİ SEKMANI | RETAINING RING | 2,80mm | | ♦ | ♦ | ♦ | ♦ | ♦ | ♦ | ♦ | ♦ |
| 99 | K21.03839 | 945 981 0010 | (018 981 8110) | 1 | 1.VİTES MASURA BİLYA | NEEDLE CAGE | 75X83X48mm | | ♦ | ♦ | | | | | | |
| | | | (018 981 7610) | | | | | | | | | | | | | |
| 99 | K21.03817 | 019 981 4410 | (007 981 4210) | 1 | 1.VİTES MASURA BİLYA | NEEDLE CAGE | 75X83X55mm | | ♦ | ♦ | ♦ | ♦ | ♦ | ♦ | ♦ | ♦ |
| | | | (008 981 8310) | | | | | | | | | | | | | |
| | | | (009 981 0010) | | | | | | | | | | | | | |
| 100a | K21.03162 | 946 262 0811 | (389 262 2711) | 1 | 1.VİTES DİŞLİSİ 44 DİŞ | GEAR 1st 44 T. | | | ♦ | ♦ | ♦ | ♦ | ♦ | ♦ | ♦ | ♦ |
| | | | (946 262 0911) | | | | | | | | | | | | | |
| | | | (945 262 3111) | | | | | | | | | | | | | |
| 100a | | 945 262 8911 | (945 262 3711) | 1 | 1.VİTES DİŞLİSİ 44 DİŞ | GEAR 1st 44 T. | | | ♦ | ♦ | | | | | | |

NOTES :
Parts encoded alphabetic and numaric are used together.

GEARBOX TYPE:
715520 - 715521 - 715527 - G240 - 16 /11,7 - 0,69 NEW
715260 - G240 - 16 /11,7 - 0,69 EPS
715261 - 715400 - 715410 - 715411 - G240 - 16 /11,7 - 0,69 OLD

NOTLAR :
Alfabetik ve rakam ile kodlanan parçalar birlikte kullanılır.

ŞANZIMAN TİPLERİ:
715520 - 715521 - 715527 - G240 - 16 /11,7 - 0,69 NEW
715260 - G240 - 16 /11,7 - 0,69 EPS
715261 - 715400 - 715410 - 715411 - G240 - 16 /11,7 - 0,69 OLD





Original parts names, oem numbers, symbols and descriptions used in this catalogue are for reference purposes only.

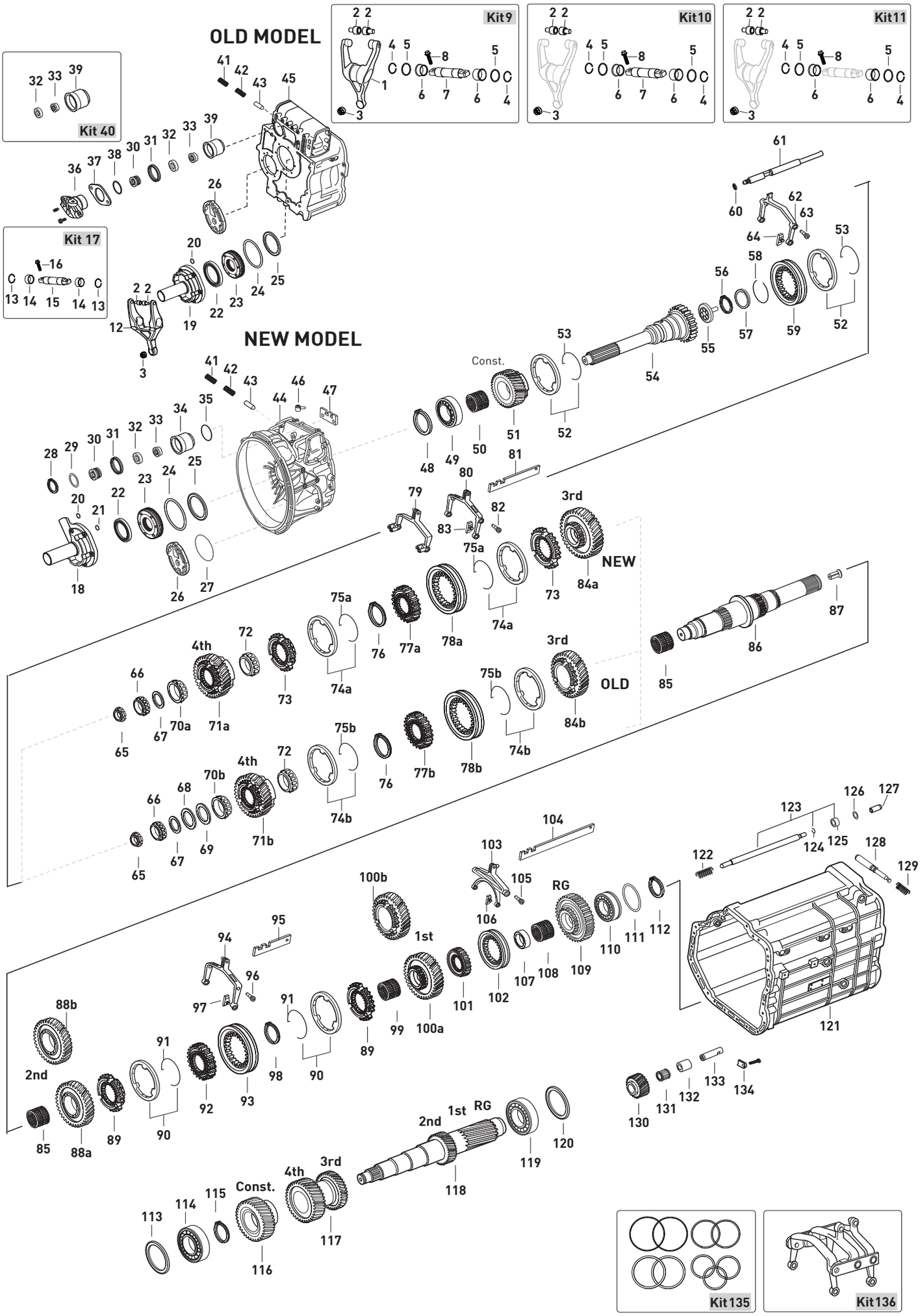






Original parts names, oem numbers, symbols and descriptions used in this catalogue are for reference purposes only.

| Fig. | Kacmaz No | Oem No | Oem Old No | Pcs. | Ürün Tanımı | Description | Sizes | Not | 715520 | 715521 | 715527 | 715260 | 715261 | 715400 | 715410 | 715411 |
|---|---|---|---|---|---|---|---|---|---|---|---|---|---|---|---|---|
| 100b | | 945 260 1608 | (389 260 6108) | 1 | 1.VİTES DİŞLİSİ 44 DİŞ | GEAR 1st 44 T. | | | | | | ♦ | ♦ | ♦ | ♦ | ♦ |
| 101 | K21.06995 | 945 262 3935 | | 1 | GERİ VİTES YILDIZ DİŞLİ | SYNCHRONIZER HUB | | (F) | ♦ | ♦ | | | | | | |
| 101 | K21.03163 | 945 262 3835 | | 1 | GERİ VİTES YILDIZ DİŞLİ | SYNCHRONIZER HUB | | (H) | ♦ | ♦ | | | | | | |
| 101 | K21.03059 | 389 262 0135 | | 1 | GERİ VİTES YILDIZ DİŞLİ | SYNCHRONIZER HUB | | (E)(G) | ♦ | ♦ | ♦ | ♦ | ♦ | ♦ | ♦ | ♦ |
| 101 | K21.03164 | 389 262 3935 | | 1 | GERİ VİTES YILDIZ DİŞLİ | SYNCHRONIZER HUB | | (I) | ♦ | ♦ | | | | | | |
| 102 | K21.03060 | 389 262 1723 | (389 262 0023) | 1 | GERİ VİTES HALKASI | ENGAGING SLEEVE | | (E)(G) | ♦ | ♦ | ♦ | ♦ | | ♦ | ♦ | ♦ |
| 102 | K21.03061 | 389 262 1823 | (389 262 0923) | 1 | GERİ VİTES HALKASI | ENGAGING SLEEVE | | (F)(H)(I) | ♦ | ♦ | ♦ | | ♦ | | | |
| 103 | K21.06259 | 945 260 0430 | (945 265 0003) | 1 | GERİ VİTES HİLALİ | SHIFTING FORK RG | | | ♦ | ♦ | ♦ | | | | | |
| 103 | | 389 260 4830 | | 1 | GERİ VİTES HİLALİ | SHIFTING FORK | | | | | | ♦ | ♦ | ♦ | ♦ | ♦ |
| 104 | | 945 265 1104 | (945 265 0204) | 1 | GERİ VİTES HİLAL ÇITASI | SHIFTING ROD | | | ♦ | | | | | | | |
| 104 | | 945 265 1004 | | 1 | GERİ VİTES HİLAL ÇITASI | SHIFTING ROD | | | ♦ | ♦ | ♦ | | | | | |
| 104 | | 389 265 3504 | | 1 | GERİ VİTES HİLAL ÇITASI | SHIFTING ROD | | | | | | ♦ | ♦ | ♦ | ♦ | ♦ |
| 105 | K21.04307 | 960 265 0774 | (945 265 1274) | 2 | HİLAL CİVATASI | PIN | | | ♦ | ♦ | ♦ | ♦ | ♦ | ♦ | ♦ | ♦ |
| | | | (945 265 2974) | | | | | | | | | | | | | |
| | | | (945 265 2774) | | | | | | | | | | | | | |
| 106 | K21.03410 | 947 265 0249 | (945 265 0149) | 2 | GERİ VİTES HİLAL PABUCU | SLIDING PAD | | | ♦ | ♦ | ♦ | ♦ | ♦ | ♦ | ♦ | ♦ |
| 107 | K21.03065 | 389 262 0150 | | 1 | GERİ VİTES MASURA BİLYA ÇANAĞI | BEARING RACE | | (E)(F)(5) | ♦ | ♦ | ♦ | | | | | |
| 107 | K21.03112 | 389 262 2550 | (389 262 1650) | 1 | GERİ VİTES MASURA BİLYA ÇANAĞI | BEARING RACE | | (G)(H)(I)(J)(3)(4)(6) | ♦ | ♦ | ♦ | ♦ | ♦ | ♦ | ♦ | ♦ |
| | | | (389 262 0050) | | | | | | | | | | | | | |
| 108 | K21.03813 | 013 981 1810 | (013 981 2610) | 1 | GERİ VİTES MASURA BİLYA | NEEDLE CAGE | 78X86X33mm | (E)(F)(5) | ♦ | ♦ | ♦ | | | | | |
| | | | (013 981 1710) | | | | | | | | | | | | | |
| 108 | K21.03803 | 009 981 1510 | (017 981 7810) | 1 | GERİ VİTES MASURA BİLYA | NEEDLE CAGE | 78X86X35mm | (G)(H)(I)(J)(3)(4)(6) | ♦ | ♦ | ♦ | ♦ | ♦ | ♦ | ♦ | ♦ |
| | | | (008 981 9310) | | | | | | | | | | | | | |
| | | | (012 981 9110) | | | | | | | | | | | | | |
| 109 | K21.06045 | 930 262 0233 | | 1 | GERİ VİTES DİŞLİSİ 40 DİŞ | REVERSE GEAR 40 T. | | (E)(5) | ♦ | ♦ | ♦ | | | | | |
| 109 | K21.06044 | 960 262 0033 | | 1 | GERİ VİTES DİŞLİSİ 40 DİŞ | REVERSE GEAR 40 T. | | (F)(5) | ♦ | ♦ | ♦ | | | | | |
| 109 | K21.03165 | 945 262 3233 | (389 262 2033) | 1 | GERİ VİTES DİŞLİSİ 40 DİŞ | REVERSE GEAR 40 T. | | (G)(3)(4)(6) | ♦ | ♦ | ♦ | ♦ | ♦ | ♦ | ♦ | ♦ |
| 109 | K21.03167 | 945 262 4433 | | 1 | GERİ VİTES DİŞLİSİ 40 DİŞ | REVERSE GEAR 40 T. | | (H)(3)(4) | ♦ | ♦ | | | | | | |
| 109 | K21.03168 | 945 262 3333 | (389 262 2133) | 1 | GERİ VİTES DİŞLİSİ 40 DİŞ | REVERSE GEAR 40 T. | | (I)(3)(4) | ♦ | ♦ | | | | | | |
| 109 | | 389 262 1733 | | 1 | GERİ VİTES DİŞLİSİ 40 DİŞ | REVERSE GEAR 40 T. | | (J)(3)(4)(6) | | | | ♦ | | | | |
| 110 | K21.03661 | 002 981 8181 | | 1 | KAMALI MİL ARKA BİLYA | ROLLER BEARING | 60X130X35,2mm | (5) | ♦ | ♦ | ♦ | | | | | |
| 110 | K21.03623 | 014 981 6105 | (016 981 1305) | 1 | KAMALI MİL ARKA BİLYA | ROLLER BEARING | 60X130X33,2mm | (3)(4)(6) | ♦ | ♦ | ♦ | ♦ | ♦ | ♦ | ♦ | ♦ |
| | | | (014 981 7505) | | | | | | | | | | | | | |
| 111 | K21.04182 | 389 262 3552 | | 1 | KAMALI MİL ARKA BİLYA RAYNELİ | THRUST WASHER | 0,10mm | | ♦ | ♦ | ♦ | ♦ | ♦ | ♦ | ♦ | ♦ |
| 111 | K21.04184 | 389 262 3652 | | 1 | KAMALI MİL ARKA BİLYA RAYNELİ | THRUST WASHER | 0,15mm | | ♦ | ♦ | ♦ | ♦ | ♦ | ♦ | ♦ | ♦ |
| 111 | K21.04152 | 389 262 3752 | | 1 | KAMALI MİL ARKA BİLYA RAYNELİ | THRUST WASHER | 0,20mm | | ♦ | ♦ | ♦ | ♦ | ♦ | ♦ | ♦ | ♦ |
| 111 | K21.94152 | | | 1 | KAMALI MİL ARKA BİLYA RAYNELİ | THRUST WASHER | 0,30mm | | ♦ | ♦ | ♦ | ♦ | ♦ | ♦ | ♦ | ♦ |
| 111 | K21.04183 | 389 262 3852 | | 1 | KAMALI MİL ARKA BİLYA RAYNELİ | THRUST WASHER | 0,40mm | | ♦ | ♦ | ♦ | ♦ | ♦ | ♦ | ♦ | ♦ |
| 111 | K21.94183 | | | 1 | KAMALI MİL ARKA BİLYA RAYNELİ | THRUST WASHER | 0,50mm | | ♦ | ♦ | ♦ | ♦ | ♦ | ♦ | ♦ | ♦ |
| 111 | K21.84183 | | | 1 | KAMALI MİL ARKA BİLYA RAYNELİ | THRUST WASHER | 0,60mm | | ♦ | ♦ | ♦ | ♦ | ♦ | ♦ | ♦ | ♦ |
| 111 | K21.74183 | | | 1 | KAMALI MİL ARKA BİLYA RAYNELİ | THRUST WASHER | 0,70mm | | ♦ | ♦ | ♦ | ♦ | ♦ | ♦ | ♦ | ♦ |
| 111 | K21.04185 | 389 262 3952 | | 1 | KAMALI MİL ARKA BİLYA RAYNELİ | THRUST WASHER | 0,80mm | | ♦ | ♦ | ♦ | ♦ | ♦ | ♦ | ♦ | ♦ |
| 111 | K21.06718 | 010 990 8382 | | 1 | KAMALI MİL ARKA BİLYA RAYNELİ | THRUST WASHER | 1,00mm | | ♦ | ♦ | ♦ | ♦ | ♦ | ♦ | ♦ | ♦ |
| 112 | K21.04331 | 007 994 1841 | (006 994 9941) | 1 | KAMALI MİL ARKA BİLYA SEKMANI | RETAINING RING | 2,50mm | | ♦ | ♦ | ♦ | ♦ | ♦ | ♦ | ♦ | ♦ |
| 113 | K21.04192 | 406 337 0252 | | 1 | GRUP MİLİ ÖN BİLYA RAYNELİ | THRUST WASHER | 0,10mm | | ♦ | ♦ | ♦ | ♦ | ♦ | ♦ | ♦ | ♦ |
| 113 | K21.04150 | 406 337 0352 | | 1 | GRUP MİLİ ÖN BİLYA RAYNELİ | THRUST WASHER | 0,20mm | | ♦ | ♦ | ♦ | ♦ | ♦ | ♦ | ♦ | ♦ |
| 113 | K21.94150 | | | 1 | GRUP MİLİ ÖN BİLYA RAYNELİ | THRUST WASHER | 0,25mm | | ♦ | ♦ | ♦ | ♦ | ♦ | ♦ | ♦ | ♦ |
| 113 | K21.04338 | 406 337 0452 | | 1 | GRUP MİLİ ÖN BİLYA RAYNELİ | THRUST WASHER | 0,30mm | | ♦ | ♦ | ♦ | ♦ | ♦ | ♦ | ♦ | ♦ |
| 113 | K21.04196 | 389 263 5352 | (389 263 3252) | 1 | GRUP MİLİ ÖN BİLYA RAYNELİ | THRUST WASHER | 0,40mm | | ♦ | ♦ | ♦ | ♦ | ♦ | ♦ | ♦ | ♦ |
| 113 | K21.04194 | 389 263 3352 | | 1 | GRUP MİLİ ÖN BİLYA RAYNELİ | THRUST WASHER | 0,45mm | | ♦ | ♦ | ♦ | ♦ | ♦ | ♦ | ♦ | ♦ |
| 113 | K21.06719 | 389 263 5652 | | 1 | GRUP MİLİ ÖN BİLYA RAYNELİ | THRUST WASHER | 0,49mm | | ♦ | ♦ | ♦ | ♦ | ♦ | ♦ | ♦ | ♦ |
| 113 | K21.04197 | 389 263 5852 | (389 263 3552) | 1 | GRUP MİLİ ÖN BİLYA RAYNELİ | THRUST WASHER | 0,55mm | | ♦ | ♦ | ♦ | ♦ | ♦ | ♦ | ♦ | ♦ |
| 113 | K21.04340 | 389 263 6052 | | 1 | GRUP MİLİ ÖN BİLYA RAYNELİ | THRUST WASHER | 0,61mm | | ♦ | ♦ | ♦ | ♦ | ♦ | ♦ | ♦ | ♦ |

NOTES :
Parts encoded alphabetic and numaric are used together.

GEARBOX TYPE:
715520 - 715521 - 715527 - G240 - 16 /11,7 - 0,69 NEW
715260 - G240 - 16 /11,7 - 0,69 EPS
715261 - 715400 - 715410 - 715411 - G240 - 16 /11,7 - 0,69 OLD

NOTLAR :
Alfabetik ve rakam ile kodlanan parçalar birlikte kullanılır.

ŞANZIMAN TİPLERİ:
715520 - 715521 - 715527 - G240 - 16 /11,7 - 0,69 NEW
715260 - G240 - 16 /11,7 - 0,69 EPS
715261 - 715400 - 715410 - 715411 - G240 - 16 /11,7 - 0,69 OLD





Original parts names, oem numbers, symbols and descriptions used in this catalogue are for reference purposes only.

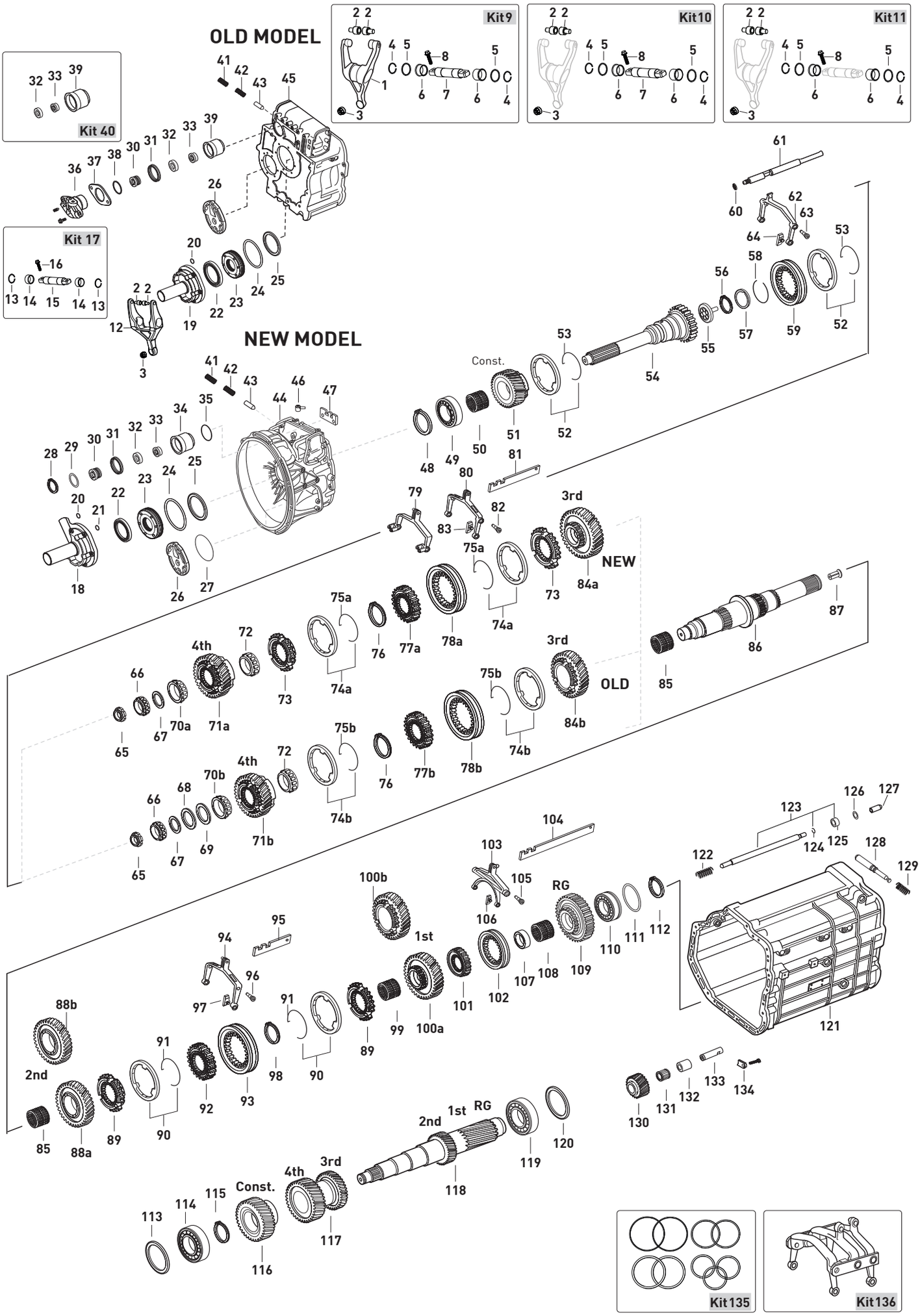






Original parts names, oem numbers, symbols and descriptions used in this catalogue are for reference purposes only.

| Fig. | Kacmaz No | Oem No | Oem Old No | Pcs. | Ürün Tanımı | Description | Sizes | Not | 715520 | 715521 | 715527 | 715260 | 715261 | 715400 | 715410 | 715411 |
|---|---|---|---|---|---|---|---|---|---|---|---|---|---|---|---|---|
| 113 | K21.04198 | 389 263 6352 | (389 263 3852) | 1 | GRUP MİLİ ÖN BİLYA RAYNELİ | THRUST WASHER | 0,70mm | | ♦ | ♦ | ♦ | ♦ | ♦ | ♦ | ♦ | ♦ |
| 113 | K21.04154 | 389 263 3952 | | 1 | GRUP MİLİ ÖN BİLYA RAYNELİ | THRUST WASHER | 0,75mm | | ♦ | ♦ | ♦ | ♦ | ♦ | ♦ | ♦ | ♦ |
| 113 | K21.04199 | 389 263 6852 | | 1 | GRUP MİLİ ÖN BİLYA RAYNELİ | THRUST WASHER | 0,85mm | | ♦ | ♦ | ♦ | ♦ | ♦ | ♦ | ♦ | ♦ |
| 113 | K21.04200 | 389 263 7352 | | 1 | GRUP MİLİ ÖN BİLYA RAYNELİ | THRUST WASHER | 1,00mm | | ♦ | ♦ | ♦ | ♦ | ♦ | ♦ | ♦ | ♦ |
| 113 | K21.04201 | 389 263 7852 | | 1 | GRUP MİLİ ÖN BİLYA RAYNELİ | THRUST WASHER | 1,15mm | | ♦ | ♦ | ♦ | ♦ | ♦ | ♦ | ♦ | ♦ |
| 113 | K21.04202 | 389 263 8352 | | 1 | GRUP MİLİ ÖN BİLYA RAYNELİ | THRUST WASHER | 1,30mm | | ♦ | ♦ | ♦ | ♦ | ♦ | ♦ | ♦ | ♦ |
| 114 | K21.03606 | 015 981 9005 | (014 981 1405) | 1 | GRUP MİLİ ÖN BİLYA | ROLLER BEARING | 50,8X100X35mm | (8) | ♦ | ♦ | ♦ | ♦ | ♦ | ♦ | ♦ | ♦ |
| | | | (012 981 7405) | | | | | | | | | | | | | |
| | | | (012 981 5105) | | | | | | | | | | | | | |
| 114 | | 012 981 9605 | | 1 | GRUP MİLİ ÖN BİLYA | ROLLER BEARING | 50,8X100X46,04mm | (9) | | | | ♦ | ♦ | ♦ | ♦ | ♦ |
| 115 | K21.06425 | 389 994 0041 | | 1 | GRUP MİLİ ÖN BİLYA SEKMANI | RETAINING RING | 2,50mm | | ♦ | ♦ | ♦ | ♦ | ♦ | ♦ | ♦ | ♦ |
| 116 | K21.03170 | 945 263 0710 | (945 263 0810) | 1 | TAKVİYE DİŞLİ KARŞILIĞI 31 DİŞ | CONSTANT GEAR 31 T. | | | ♦ | ♦ | ♦ | ♦ | ♦ | ♦ | ♦ | ♦ |
| | | | (389 263 1410) | | | | | | | | | | | | | |
| 117 | K21.03452 | 945 263 3213 | (945 263 0013) | 1 | 3./4.VİT.DİŞLİ KARŞILIĞI 29/34 DİŞ | DOUBLE GEAR 3rd/4th 29/34 T. | | | ♦ | ♦ | ♦ | ♦ | ♦ | ♦ | ♦ | ♦ |
| 117 | K21.03227 | 389 263 1813 | | 1 | 3./4.VİT.DİŞLİ KARŞILIĞI 29/34 DİŞ | DOUBLE GEAR 3rd/4th 29/34 T. | | | | | | ♦ | ♦ | ♦ | ♦ | ♦ |
| 118 | K21.03175 | 945 263 2902 | (945 263 0902) | 1 | GRUP MİLİ 16/21 DİŞ | COUNTER SHAFT 16/21 T. | | (8) | ♦ | ♦ | ♦ | ♦ | ♦ | ♦ | ♦ | ♦ |
| | | | (389 263 3102) | | | | | | | | | | | | | |
| | | | (389 263 2502) | | | | | | | | | | | | | |
| | | | (389 263 1602) | | | | | | | | | | | | | |
| | | | (389 263 1302) | | | | | | | | | | | | | |
| 118 | K21.06047 | 945 263 0602 | (945 263 0102) | 1 | GRUP MİLİ 16/21 DİŞ | COUNTER SHAFT 16/21 T. | | (9) | | | | ♦ | ♦ | ♦ | ♦ | ♦ |
| 119 | K21.03624 | 016 981 1205 | (012 981 9405) | 1 | GRUP MİLİ ARKA BİLYA | ROLLER BEARING | 60X130X33,8mm | | ♦ | ♦ | ♦ | ♦ | ♦ | ♦ | ♦ | ♦ |
| | | | (012 981 9205) | | | | | | | | | | | | | |
| 120 | K21.06697 | | | 1 | GRUP MİLİ ARKA BİLYA RAYNELİ | THRUST WASHER | 1,30mm | | | | | ♦ | ♦ | ♦ | ♦ | ♦ |
| 120 | K21.04232 | 389 263 5052 | | 1 | GRUP MİLİ ARKA BİLYA RAYNELİ | THRUST WASHER | 1,15mm | | | | | ♦ | ♦ | ♦ | ♦ | ♦ |
| 120 | K21.04231 | 389 263 4952 | | 1 | GRUP MİLİ ARKA BİLYA RAYNELİ | THRUST WASHER | 1,10mm | | | | | ♦ | ♦ | ♦ | ♦ | ♦ |
| 120 | K21.04230 | 389 263 4852 | | 1 | GRUP MİLİ ARKA BİLYA RAYNELİ | THRUST WASHER | 1,05mm | | | | | ♦ | ♦ | ♦ | ♦ | ♦ |
| 120 | K21.04229 | 389 263 4752 | | 1 | GRUP MİLİ ARKA BİLYA RAYNELİ | THRUST WASHER | 1,00mm | | | | | ♦ | ♦ | ♦ | ♦ | ♦ |
| 120 | K21.04228 | 389 263 4652 | | 1 | GRUP MİLİ ARKA BİLYA RAYNELİ | THRUST WASHER | 0,95mm | | | | | ♦ | ♦ | ♦ | ♦ | ♦ |
| 120 | K21.04227 | 389 263 4552 | | 1 | GRUP MİLİ ARKA BİLYA RAYNELİ | THRUST WASHER | 0,90mm | | | | | ♦ | ♦ | ♦ | ♦ | ♦ |
| 120 | K21.04226 | 389 263 4452 | | 1 | GRUP MİLİ ARKA BİLYA RAYNELİ | THRUST WASHER | 0,85mm | | | | | ♦ | ♦ | ♦ | ♦ | ♦ |
| 120 | K21.04225 | 389 263 0552 | | 1 | GRUP MİLİ ARKA BİLYA RAYNELİ | THRUST WASHER | 0,80mm | | | | | ♦ | ♦ | ♦ | ♦ | ♦ |
| 120 | K21.04224 | 389 263 4352 | | 1 | GRUP MİLİ ARKA BİLYA RAYNELİ | THRUST WASHER | 0,75mm | | | | | ♦ | ♦ | ♦ | ♦ | ♦ |
| 120 | K21.04155 | 389 263 4252 | | 1 | GRUP MİLİ ARKA BİLYA RAYNELİ | THRUST WASHER | 0,70mm | | | | | ♦ | ♦ | ♦ | ♦ | ♦ |
| 120 | K21.04223 | 389 263 4152 | | 1 | GRUP MİLİ ARKA BİLYA RAYNELİ | THRUST WASHER | 0,65mm | | | | | ♦ | ♦ | ♦ | ♦ | ♦ |
| 120 | K21.04153 | 389 263 4052 | | 1 | GRUP MİLİ ARKA BİLYA RAYNELİ | THRUST WASHER | 0,60mm | | | | | ♦ | ♦ | ♦ | ♦ | ♦ |
| 120 | K21.06695 | | | 1 | GRUP MİLİ ARKA BİLYA RAYNELİ | THRUST WASHER | 0,55mm | | | | | ♦ | ♦ | ♦ | ♦ | ♦ |
| 120 | K21.06692 | | | 1 | GRUP MİLİ ARKA BİLYA RAYNELİ | THRUST WASHER | 0,50mm | | | | | ♦ | ♦ | ♦ | ♦ | ♦ |
| 120 | K21.06694 | | | 1 | GRUP MİLİ ARKA BİLYA RAYNELİ | THRUST WASHER | 0,45mm | | | | | ♦ | ♦ | ♦ | ♦ | ♦ |
| 120 | K21.06693 | 389 263 0452 | | 1 | GRUP MİLİ ARKA BİLYA RAYNELİ | THRUST WASHER | 0,40mm | | | | | ♦ | ♦ | ♦ | ♦ | ♦ |
| 120 | K21.04358 | | | 1 | GRUP MİLİ ARKA BİLYA RAYNELİ | THRUST WASHER | 0,30mm | | | | | ♦ | ♦ | ♦ | ♦ | ♦ |
| 120 | K21.04357 | | | 1 | GRUP MİLİ ARKA BİLYA RAYNELİ | THRUST WASHER | 0,20mm | | | | | ♦ | ♦ | ♦ | ♦ | ♦ |
| 120 | K21.04156 | 389 263 0152 | | 1 | GRUP MİLİ ARKA BİLYA RAYNELİ | THRUST WASHER | 0,10mm | | | | | ♦ | ♦ | ♦ | ♦ | ♦ |
| 121 | | 930 260 2511 | (945 260 9911) | 1 | ŞANZIMAN ORTA GÖVDE | HOUSING | | | ♦ | ♦ | ♦ | | | | | |
| 121 | | 389 261 3303 | (389 261 2903) | 1 | ŞANZIMAN ORTA GÖVDE | HOUSING | | | | | | ♦ | ♦ | ♦ | ♦ | ♦ |
| 121 | | 655 260 3623 | (389 261 3126) | 1 | ŞANZIMAN ORTA GÖVDE | HOUSING | | | | | | ♦ | ♦ | ♦ | ♦ | ♦ |
| 122 | | 389 993 0501 | | 1 | KİLİTLEME MİL YAYI | SPRING | | | ♦ | ♦ | ♦ | ♦ | ♦ | ♦ | ♦ | ♦ |
| 123 | K21.06046 | 945 268 0225 | | 1 | KİLİTLEME MİLİ | SHIFTING ROD | | | ♦ | ♦ | ♦ | | | | | |
| 123 | K21.03394 | 389 268 4825 | | 1 | KİLİTLEME MİLİ | SHIFTING ROD | | | | | | ♦ | ♦ | ♦ | ♦ | ♦ |
| 124 | | 007993 012200 | | 1 | KİLİTLEME MİLİ SEKMANI | RETAINING RING | | | ♦ | ♦ | ♦ | ♦ | ♦ | ♦ | ♦ | ♦ |
| 125 | | 389 268 0051 | | 1 | KİLİTLEME MİL BURCU | SPACER RING | | | ♦ | ♦ | ♦ | ♦ | ♦ | ♦ | ♦ | ♦ |
| 126 | | 000998 006019 | | 1 | KİLİTLEME MİLİ AYAR RAYNELİ | FITTED WASHER | 0,10mm | | ♦ | ♦ | ♦ | ♦ | ♦ | ♦ | ♦ | ♦ |
| 126 | | 000998 006020 | | 1 | KİLİTLEME MİLİ AYAR RAYNELİ | FITTED WASHER | 0,20mm | | ♦ | ♦ | ♦ | ♦ | ♦ | ♦ | ♦ | ♦ |

NOTES :
Parts encoded alphabetic and numaric are used together.

GEARBOX TYPE:
715520 - 715521 - 715527 - G240 - 16 /11,7 - 0,69 NEW
715260 - G240 - 16 /11,7 - 0,69 EPS
715261 - 715400 - 715410 - 715411 - G240 - 16 /11,7 - 0,69 OLD

NOTLAR :
Alfabetik ve rakam ile kodlanan parçalar birlikte kullanılır.

ŞANZIMAN TİPLERİ:
715520 - 715521 - 715527 - G240 - 16 /11,7 - 0,69 NEW
715260 - G240 - 16 /11,7 - 0,69 EPS
715261 - 715400 - 715410 - 715411 - G240 - 16 /11,7 - 0,69 OLD





Original parts names, oem numbers, symbols and descriptions used in this catalogue are for reference purposes only.

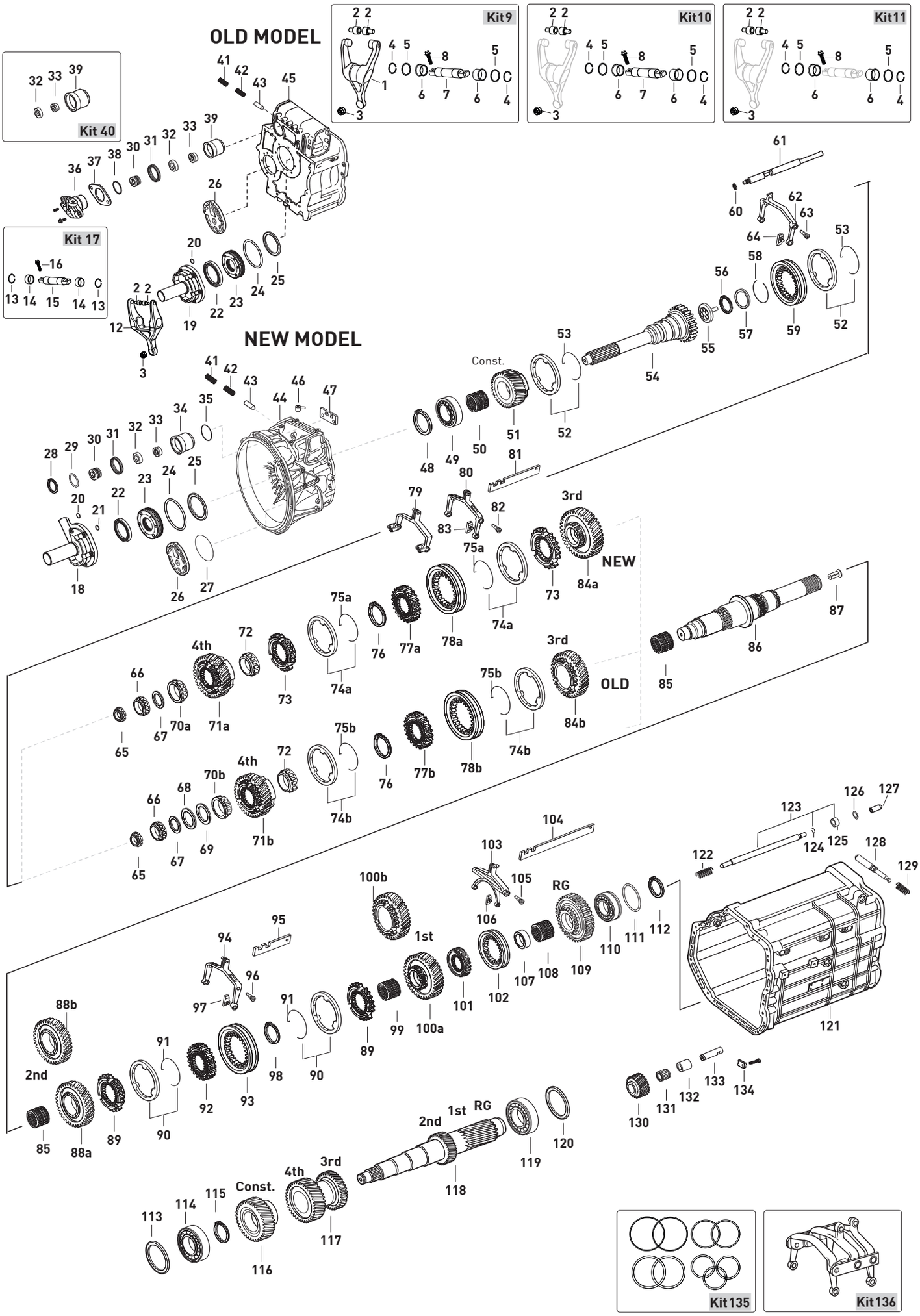






Original parts names, oem numbers, symbols and descriptions used in this catalogue are for reference purposes only.

| Fig. | Kacmaz No | Oem No | Oem Old No | Pcs. | Ürün Tanımı | Description | Sizes | Not | 715520 | 715521 | 715527 | 715260 | 715261 | 715400 | 715410 | 715411 |
|---|---|---|---|---|---|---|---|---|---|---|---|---|---|---|---|---|
| 126 | | 000988 006021 | | 1 | KİLİTLEME MİLİ AYAR RAYNELİ | FITTED WASHER | 0,30mm | | ♦ | ♦ | ♦ | ♦ | ♦ | ♦ | ♦ | ♦ |
| 126 | | 000988 006013 | | 1 | KİLİTLEME MİLİ AYAR RAYNELİ | FITTED WASHER | 0,50mm | | ♦ | ♦ | ♦ | ♦ | ♦ | ♦ | ♦ | ♦ |
| 126 | | 000988 006001 | | 1 | KİLİTLEME MİLİ AYAR RAYNELİ | FITTED WASHER | 1,00mm | | ♦ | ♦ | ♦ | ♦ | ♦ | ♦ | ♦ | ♦ |
| 127 | K21.03489 | 389 268 0674 | | 1 | KİLİTLEME MİL FİŞEĞİ | PIN | | | ♦ | ♦ | ♦ | ♦ | ♦ | ♦ | ♦ | ♦ |
| 128 | K21.03486 | 389 267 0974 | | 1 | AĞIR SERİ KİLİTLEME MİLİ | PIN | | | ♦ | ♦ | ♦ | ♦ | ♦ | ♦ | ♦ | ♦ |
| 129 | K21.06006 | 389 993 3401 | (389 993 0601) | 1 | AĞIR SERİ KİLİTLEME YAYI | SPRING | | | ♦ | ♦ | ♦ | ♦ | ♦ | ♦ | ♦ | ♦ |
| 130 | K21.06048 | 389 263 1031 | | 1 | KÜÇÜK GERİ VİTES DİŞLİSİ 21 DİŞ | REVERSE IDLER GEAR 21 T. | | | ♦ | ♦ | ♦ | ♦ | ♦ | ♦ | ♦ | ♦ |
| 131 | K21.03838 | 012 981 8910 | (012 981 9010) | 1 | KÜÇÜK GERİ VİTES MASURA BİLYA | NEEDLE CAGE | 42X50X51mm | | ♦ | ♦ | ♦ | ♦ | ♦ | ♦ | ♦ | ♦ |
| | | | (019 981 1310) | | | | | | | | | | | | | |
| 132 | K21.06031 | 389 263 0850 | | 1 | K.GERİ VİTES MASURA BİLYA ÇANAĞI | BUSHING | 18mm | | ♦ | ♦ | ♦ | ♦ | ♦ | ♦ | ♦ | ♦ |
| 133 | K21.06037 | 976 263 0030 | (976 263 1230) | 1 | KÜÇÜK GERİ VİTES PİMİ | PIN | | | ♦ | ♦ | ♦ | ♦ | ♦ | ♦ | ♦ | ♦ |
| 133 | | 389 263 0430 | | 1 | KÜÇÜK GERİ VİTES PİMİ | PIN | | | | | | ♦ | ♦ | ♦ | ♦ | ♦ |
| 134 | K21.07010 | 945 263 0041 | | 1 | KÜÇÜK GERİ VİTES PİM KİLİTLEMESİ | KEY | | | ♦ | ♦ | ♦ | ♦ | ♦ | ♦ | ♦ | ♦ |
| 135 | K21.04317 | | | Kit | RAYNEL TAKIMI | WASHER KIT | | | ♦ | ♦ | ♦ | ♦ | ♦ | ♦ | ♦ | ♦ |
| 136 | K21.06282 | 960 260 4130 | | Kit | VİTES HİLAL TAKIMI | SHIFTING FORK COMPLETE | | | ♦ | ♦ | ♦ | | | | | |

NOTES :
Parts encoded alphabetic and numaric are used together.

GEARBOX TYPE:
715520 - 715521 - 715527 - G240 - 16 /11,7 - 0,69 NEW
715260 - G240 - 16 /11,7 - 0,69 EPS
715261 - 715400 - 715410 - 715411 - G240 - 16 /11,7 - 0,69 OLD

NOTLAR :
Alfabetik ve rakam ile kodlanan parçalar birlikte kullanılır.

ŞANZIMAN TİPLERİ:
715520 - 715521 - 715527 - G240 - 16 /11,7 - 0,69 NEW
715260 - G240 - 16 /11,7 - 0,69 EPS
715261 - 715400 - 715410 - 715411 - G240 - 16 /11,7 - 0,69 OLD





Original parts names, oem numbers, symbols and descriptions used in this catalogue are for reference purposes only.

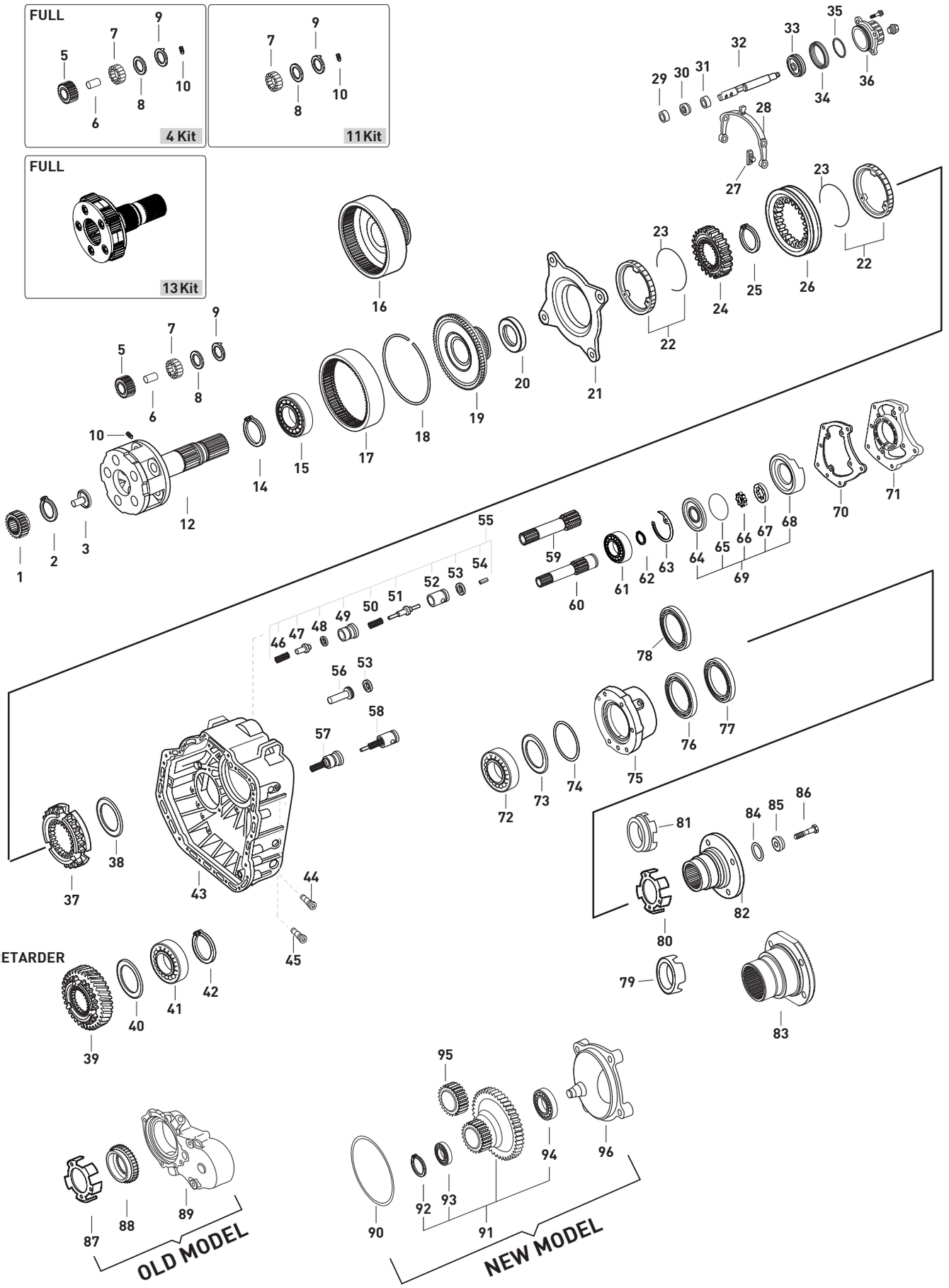






Original parts names, oem numbers, symbols and descriptions used in this catalogue are for reference purposes only.

| Fig. | Kacmaz No | Oem No | Oem Old No | Pcs. | Ürün Tanımı | Description | Sizes | Not | 715520 | 715521 | 715527 | 715260 | 715261 | 715400 | 715410 | 715411 |
|---|---|---|---|---|---|---|---|---|---|---|---|---|---|---|---|---|
| 1 | K21.03169 | 945 262 0909 | (389 262 0909) | 1 | GÜNEŞ DİŞLİ 25 DİŞ | SUN GEAR 25 T. | | | ♦ | ♦ | ♦ | ♦ | ♦ | ♦ | ♦ | ♦ |
| | | | (389 262 0809) | | | | | | | | | | | | | |
| 2 | K21.04115 | 000472 060000 | | 1 | HEYKEL YAĞ PİPET SEKMANI | SNAP RING | 2,00mm | | ♦ | ♦ | ♦ | ♦ | ♦ | ♦ | ♦ | ♦ |
| 3 | K21.03435 | 945 269 0834 | (389 269 4734) | 1 | ŞANZIMAN HEYKELİ YAĞ PİPETİ | OIL TUBE | | | ♦ | ♦ | ♦ | ♦ | ♦ | ♦ | ♦ | ♦ |
| 4 | K21.03178 | 946 260 0097 | (655 260 0197) | Kit | HEYKEL KOZA DİŞLİ TAKIMI | PLANETARY GEAR SET | | | ♦ | ♦ | ♦ | ♦ | ♦ | ♦ | ♦ | ♦ |
| 5 | K21.03436 | 945 262 0006 | | 5 | HEYKEL KOZA DİŞLİSİ 28 DİŞ | PLANETARY GEAR 28 T. | | | ♦ | ♦ | ♦ | ♦ | ♦ | ♦ | ♦ | ♦ |
| 6 | K21.03437 | 389 262 0407 | | 5 | HEYKEL KOZA DİŞLİ PİMİ | PLANETARY GEAR PIN | | | ♦ | ♦ | ♦ | ♦ | ♦ | ♦ | ♦ | ♦ |
| 7 | K21.03816 | 000 981 4186 | (000 981 4386) | 125 | HEYKEL KOZA DİŞLİ TANE BİLYA | NEEDLE ROLLER | D5X39,6 | | ♦ | ♦ | ♦ | ♦ | ♦ | ♦ | ♦ | ♦ |
| 8 | K21.04074 | 389 262 0162 | (389 262 6462) | 10 | HEYKEL KOZA DİŞLİ PULU | THRUST WASHER | | | ♦ | ♦ | ♦ | ♦ | ♦ | ♦ | ♦ | ♦ |
| | | | (389 262 0562) | | | | | | | | | | | | | |
| 9 | K21.04075 | 945 262 1162 | (945 262 0162) | 10 | HEYKEL KOZA DİŞLİ PULU | THRUST WASHER | | | ♦ | ♦ | ♦ | ♦ | ♦ | ♦ | ♦ | ♦ |
| | | | (389 262 1462) | | | | | | | | | | | | | |
| | | | (389 262 1362) | | | | | | | | | | | | | |
| | | | (389 262 1162) | | | | | | | | | | | | | |
| 10 | K21.03418 | 000914 006109 | | 5 | HEYKEL KOZA DİŞLİ VİDASI | THREADED PIN | M6X14 | | ♦ | ♦ | ♦ | ♦ | ♦ | ♦ | ♦ | ♦ |
| 11 | K21.03663 | | | Kit | HEYKEL BİLYA VE PUL TAKIMI | WASHER KIT | | | ♦ | ♦ | ♦ | ♦ | ♦ | ♦ | ♦ | ♦ |
| 12 | K21.03180 | 946 260 3561 | (946 260 3661) | 1 | ŞANZIMAN HEYKELİ (BOŞ) | PLANETARY CARRIER (EMPTY) | | (A) | ♦ | ♦ | ♦ | ♦ | ♦ | ♦ | ♦ | ♦ |
| | | | (945 260 4561) | | | | | | | | | | | | | |
| | | | (945 260 4461) | | | | | | | | | | | | | |
| 12 | K21.03182 | 389 260 8761 | (389 260 8661) | 1 | ŞANZIMAN HEYKELİ (BOŞ) | PLANETARY CARRIER (EMPTY) | | (B) | | | | ♦ | ♦ | ♦ | ♦ | ♦ |
| | | | (389 260 4661) | | | | | | | | | | | | | |
| | | | (389 260 5261) | | | | | | | | | | | | | |
| 13 | K21.06313 | 945 260 4661 | | Kit | ŞANZIMAN HEYKELİ (DOLU) | PLANETARY CARRIER (FULL) | | (A) | ♦ | ♦ | ♦ | ♦ | ♦ | ♦ | ♦ | ♦ |
| 13 | K21.03683 | | | Kit | ŞANZIMAN HEYKELİ (DOLU) | PLANETARY CARRIER (FULL) | | (B) | | | | ♦ | ♦ | ♦ | ♦ | ♦ |
| 14 | K21.06864 | 000472 130000 | | 1 | ÇEMBER DİŞLİ BİLYA SEKMANI | RETAINING RING | 130X4mm | | ♦ | ♦ | ♦ | ♦ | ♦ | ♦ | ♦ | ♦ |
| 15 | K21.03614 | 008 981 1325 | (004 981 8725) | 1 | ÇEMBER DİŞLİ BİLYASI | ROLLER BEARING | 90X130X14mm | | ♦ | ♦ | ♦ | ♦ | ♦ | ♦ | ♦ | ♦ |
| | | | (004 981 8825) | | | | | | | | | | | | | |
| | | | (004 981 9425) | | | | | | | | | | | | | |
| 16 | K21.03438 | 945 262 0108 | (389 262 0808) | 1 | ÇEMBER DİŞLİ 85 DİŞ | RING WHEEL 85 T. | | (A) | ♦ | ♦ | ♦ | ♦ | ♦ | ♦ | ♦ | ♦ |
| 16 | | 389 262 0608 | | 1 | ÇEMBER DİŞLİ 85 DİŞ | RING WHEEL 85 T. | | (B) | | | | ♦ | ♦ | ♦ | ♦ | ♦ |
| 17 | K21.03440 | 945 262 0208 | | 1 | ÇEMBER DİŞLİ 85 DİŞ | RING WHEEL 85 T. | | (A) | ♦ | ♦ | ♦ | ♦ | ♦ | ♦ | ♦ | ♦ |
| 17 | K21.03449 | 945 262 1208 | (945 262 0808) | 1 | ÇEMBER DİŞLİ 85 DİŞ | RING WHEEL 85 T. | | (A) | ♦ | ♦ | ♦ | | | | | |
| 17 | K21.03441 | 389 262 0708 | | 1 | ÇEMBER DİŞLİ 85 DİŞ | RING WHEEL 85 T. | | (B) | | | | ♦ | ♦ | ♦ | ♦ | ♦ |
| 18 | K21.04253 | 389 262 0773 | | 1 | ÇEMBER DİŞLİ SEKMANI | LOCK RING | | | ♦ | ♦ | ♦ | ♦ | ♦ | ♦ | ♦ | ♦ |
| 19 | K21.03442 | 930 262 0125 | (389 262 1425) | 1 | PLANET ÇAN DİŞLİ 85 DİŞ | CARRIER HUB 85 T. | | | ♦ | ♦ | ♦ | ♦ | ♦ | ♦ | ♦ | ♦ |
| 20 | K21.04076 | 389 262 0251 | | 1 | ŞANZIMAN HEYKELİ ARA PULU | SPACER RING | | | ♦ | ♦ | ♦ | ♦ | ♦ | ♦ | ♦ | ♦ |
| 21 | K21.03018 | 389 260 2036 | | 1 | TABLA SENKROMENÇ | FOLLOWER RING | | (1) | ♦ | ♦ | ♦ | ♦ | ♦ | ♦ | ♦ | ♦ |
| 21 | K21.03037 | 947 260 3036 | (947 260 0836) | 1 | TABLA SENKROMENÇ | FOLLOWER RING | | (2) | ♦ | ♦ | ♦ | | | | | |
| 22 | K21.03017 | 389 262 0537 | (389 262 0037) | 2 | AĞIR SERİ FRENLEME (Mo) | SYNCHRONIZING CONE / Mo | | (1) | ♦ | ♦ | ♦ | ♦ | ♦ | ♦ | ♦ | ♦ |
| | | | (389 262 0137) | | | | | | | | | | | | | |
| | | | (389 262 3337) | | | | | | | | | | | | | |
| 22 | K21.03078 | 945 260 0850 | | 2 | AĞIR SERİ FRENLEME (C) | SYNCHRONIZING CONE / C | | (1) | ♦ | ♦ | ♦ | ♦ | ♦ | ♦ | ♦ | ♦ |
| 22 | K21.03185 | 947 260 0945 | | 2 | AĞIR SERİ FRENLEME (Mo) | SYNCHRONIZING CONE / Mo | | (2) | ♦ | ♦ | ♦ | ♦ | ♦ | ♦ | ♦ | ♦ |
| 22 | K21.06273 | 947 260 3045 | | 2 | AĞIR SERİ FRENLEME (C) | SYNCHRONIZING CONE / C | | (2) | ♦ | ♦ | ♦ | ♦ | ♦ | ♦ | ♦ | ♦ |
| 23 | K21.03077 | 389 262 0293 | | 2 | FRENLEME TELİ | SPRING | | | ♦ | ♦ | ♦ | ♦ | ♦ | ♦ | ♦ | ♦ |
| 24 | K21.03079 | 389 262 4935 | (389 262 2035) | 1 | AĞIR SERİ YILDIZ DİŞLİ 73 DİŞ | SYNCHRONIZER HUB 73 T. | | | ♦ | ♦ | ♦ | ♦ | ♦ | ♦ | ♦ | ♦ |
| 25 | K21.04356 | 000471 120000 | | 1 | AĞIR SERİ YILDIZ DİŞLİ SEKMANI | RETAINING RING | | | ♦ | ♦ | ♦ | ♦ | ♦ | ♦ | ♦ | ♦ |
| 26 | K21.03028 | 945 262 6623 | (945 262 0823) | 1 | AĞIR SERİ HALKA 73 DİŞ | ENGAGING SLEEVE 73 T. | | (1) | ♦ | ♦ | ♦ | ♦ | ♦ | ♦ | ♦ | ♦ |
| | | | (389 262 1623) | | | | | | | | | | | | | |
| | | | (389 262 3823) | | | | | | | | | | | | | |
| | | | (945 262 2623) | | | | | | | | | | | | | |
| 26 | K21.03033 | 945 262 6923 | (930 262 0623) | 1 | AĞIR SERİ HALKA | ENGAGING SLEEVE | | (2) | ♦ | ♦ | ♦ | | | | | |
| 27 | K21.03406 | 389 265 2449 | (389 265 1249) | 2 | AĞIR SERİ HİLAL PABUCU | SLIDING PAD | | (1) | ♦ | ♦ | ♦ | ♦ | ♦ | ♦ | ♦ | ♦ |

NOTES :
Parts encoded alphabetic and numaric are used together.

GEARBOX TYPE:
715520 - 715521 - 715527 - G240 - 16 /11,7 - 0,69 NEW
715260 - G240 - 16 /11,7 - 0,69 EPS
715261 - 715400 - 715410 - 715411 - G240 - 16 /11,7 - 0,69 OLD

NOTLAR :
Alfabetik ve rakam ile kodlanan parçalar birlikte kullanılır.

ŞANZIMAN TİPLERİ:
715520 - 715521 - 715527 - G240 - 16 /11,7 - 0,69 NEW
715260 - G240 - 16 /11,7 - 0,69 EPS
715261 - 715400 - 715410 - 715411 - G240 - 16 /11,7 - 0,69 OLD





Original parts names, oem numbers, symbols and descriptions used in this catalogue are for reference purposes only.

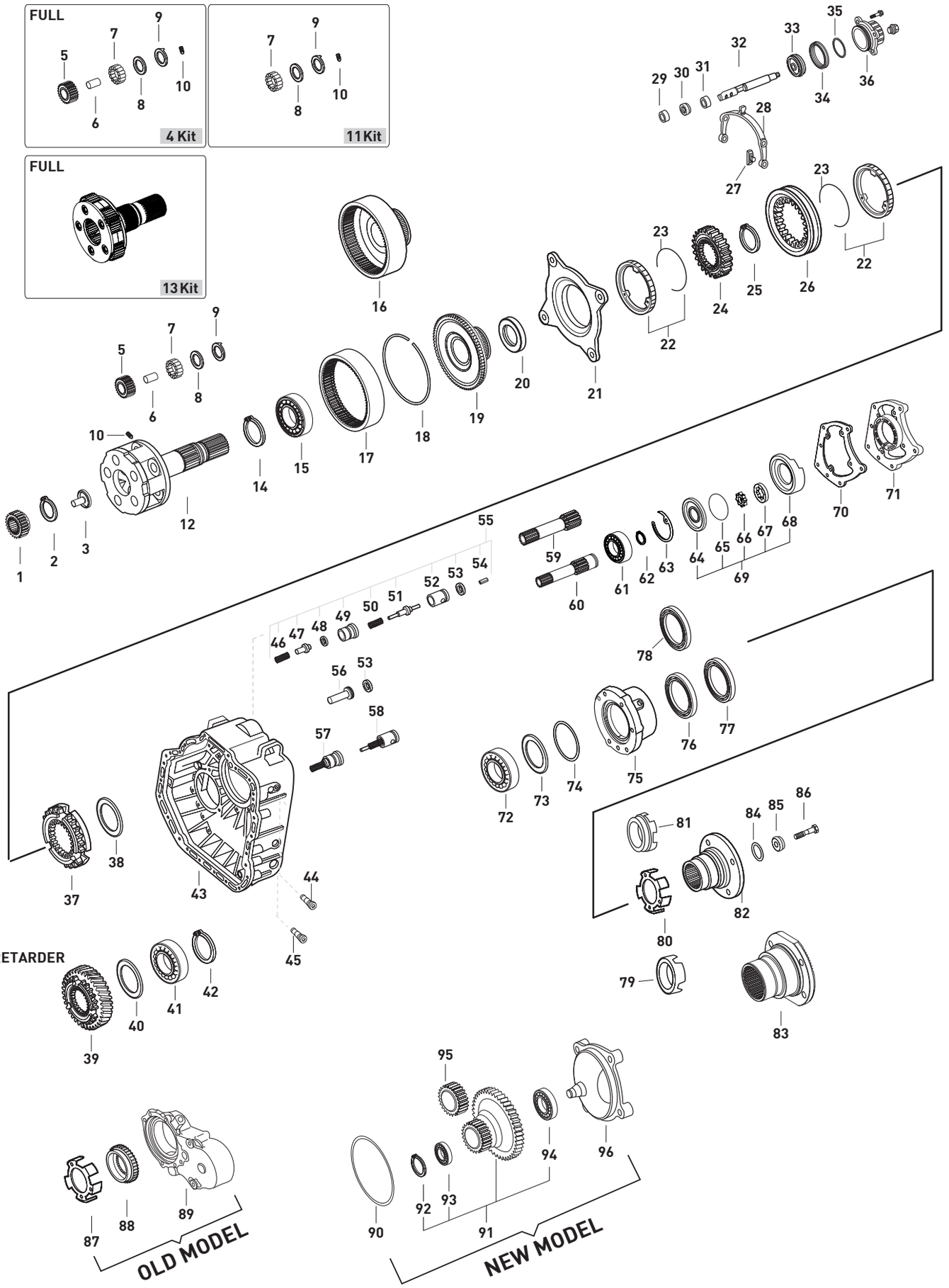






Original parts names, oem numbers, symbols and descriptions used in this catalogue are for reference purposes only.

| Fig. | Kacmaz No | Oem No | Oem Old No | Pcs. | Ürün Tanımı | Description | Sizes | Not | 715520 | 715521 | 715527 | 715260 | 715261 | 715400 | 715410 | 715411 |
|---|---|---|---|---|---|---|---|---|---|---|---|---|---|---|---|---|
| 27 | K21.03431 | 960 265 0049 | (947 265 0349) | 2 | AĞIR SERİ HİLAL PABUCU | SLIDING PAD | | (2) | ♦ | ♦ | ♦ | | | | | |
| 28 | K21.06411 | 947 265 1701 | (389 265 0901) | 1 | AĞIR SERİ HİLALİ | SHIFTING FORK | | (1) | ♦ | ♦ | ♦ | ♦ | ♦ | ♦ | ♦ | ♦ |
| | | | (930 265 0001) | | | | | | | | | | | | | |
| | | | (947 265 0801) | | | | | | | | | | | | | |
| 28 | K21.06324 | 947 265 1901 | (947 265 0901) | 1 | AĞIR SERİ HİLALİ | SHIFTING FORK | | (2) | ♦ | ♦ | ♦ | | | | | |
| 29 | K21.04254 | 000 992 7703 | (389 267 2250) | 1 | AĞIR SERİ HİLAL MİL BURCU | BUSHING | 21X25X20mm | | ♦ | ♦ | ♦ | ♦ | ♦ | ♦ | ♦ | ♦ |
| 30 | K21.03523 | 000 267 0197 | (000 267 0397) | 1 | AĞIR SERİ HİLAL MİL KEÇESİ | OIL SEAL | 22X32X8mm | | ♦ | ♦ | ♦ | ♦ | ♦ | ♦ | ♦ | ♦ |
| | | | (014 997 3647) | | | | | | | | | | | | | |
| | | | (014 997 5147) | | | | | | | | | | | | | |
| 31 | K21.04178 | 387 267 0650 | (387 267 0250) | 1 | AĞIR SERİ HİLAL MİL BURCU | BUSHING | 34x22x8mm | | ♦ | ♦ | ♦ | ♦ | ♦ | ♦ | ♦ | ♦ |
| 32 | | 389 267 3417 | | 1 | AĞIR SERİ HİLAL MİLİ | SHIFTING ROD | | EPS | | | | ♦ | | | | |
| 32 | | 389 267 7217 | (389 267 3917) | 1 | AĞIR SERİ HİLAL MİLİ | SHIFTING ROD | | MPS | | | | | ♦ | ♦ | ♦ | ♦ |
| 32 | | 389 267 3517 | | 1 | AĞIR SERİ HİLAL MİLİ | SHIFTING ROD | | | ♦ | ♦ | ♦ | | | | | |
| 33 | K21.06975 | 960 267 0818 | (389 267 1018) | 1 | AĞIR SERİ HİLAL MİL PİSTONU | PISTON | | | ♦ | ♦ | ♦ | ♦ | ♦ | ♦ | ♦ | ♦ |
| | | | (389 267 0118) | | | | | | | | | | | | | |
| 34 | K21.03525 | 024 997 8347 | (020 997 6747) | 1 | AĞIR SERİ SİLİNDİR KEÇESİ | SEAL RING | 77X90X17mm | | ♦ | ♦ | ♦ | ♦ | ♦ | ♦ | ♦ | ♦ |
| 35 | K21.06399 | 013 997 7548 | | 1 | AĞIR SERİ SİLİNDİR ORİNGİ | O-RING | 89,5X3mm | | ♦ | ♦ | ♦ | ♦ | ♦ | ♦ | ♦ | ♦ |
| 36 | K21.03540 | 945 267 1119 | (389 267 1319) | 1 | AĞIR SERİ SİLİNDİRİ | SHIFTING CYLINDER | | | ♦ | ♦ | ♦ | ♦ | ♦ | ♦ | ♦ | ♦ |
| | | | (389 267 4219) | | | | | | | | | | | | | |
| | | | (945 267 1319) | | | | | | | | | | | | | |
| | | | (945 267 1619) | | | | | | | | | | | | | |
| 37 | K21.03021 | 389 262 4434 | | 1 | SERİ SENKROMENÇ | ENGAGING RING | | (1) | | | | ♦ | ♦ | ♦ | ♦ | ♦ |
| 37 | K21.03187 | 389 262 9234 | (945 262 1234) | 1 | SERİ SENKROMENÇ | ENGAGING RING | | (1) | ♦ | ♦ | ♦ | ♦ | ♦ | ♦ | ♦ | ♦ |
| 37 | K21.03186 | 945 262 3834 | | 1 | SERİ SENKROMENÇ | ENGAGING RING | | (2) | ♦ | ♦ | ♦ | | | | | |
| 38 | | 389 262 7854 | | 1 | ŞANZIMAN HEYKEL BİLYA PULU | WASHER | | | | | | ♦ | ♦ | ♦ | ♦ | ♦ |
| 39 | K21.06059 | 945 264 0420 | (945 264 0220) | 1 | RETARDER DİŞLİSİ 59 DİŞ | RETARDER GEAR 59 T. | | (1) | ♦ | ♦ | | | | | | |
| 39 | | 945 264 0620 | | 1 | RETARDER DİŞLİSİ 59 DİŞ | RETARDER GEAR 59 T. | | | ♦ | ♦ | | | | | | |
| 39 | K21.06050 | 945 264 0130 | (389 264 0730) | 1 | RETARDER DİŞLİSİ 63 DİŞ | RETARDER GEAR 63 T. | | (1) | ♦ | | | | | | | |
| 39 | | 945 264 0520 | | 1 | RETARDER DİŞLİSİ 63 DİŞ | RETARDER GEAR 63 T. | | | ♦ | | | | | | | |
| 39 | K21.06058 | 930 264 0420 | | 1 | RETARDER DİŞLİSİ 59 DİŞ | RETARDER GEAR 59 T. | | (2) | ♦ | ♦ | ♦ | | | | | |
| 40 | | 387 264 0064 | | 1 | YAĞ TOPLAMA SACI | OIL BAFFLE | | | ♦ | ♦ | | | | | | |
| 41 | | 007 981 8201 | (007 981 8701) | 1 | ŞANZIMAN HEYKEL BİLYASI | BEARING | 103X140X26mm | | ♦ | ♦ | | | | | | |
| 42 | | 000472 140000 | | 1 | HEYKEL BİLYA SEKMANI | LOCK RING | 140X4mm | | ♦ | ♦ | | | | | | |
| 43 | | 945 261 5003 | | 1 | ŞANZIMAN ARKA GÖVDE | HOUSING | | | | | | ♦ | ♦ | ♦ | ♦ | |
| 43 | | 656 260 2112 | | 1 | ŞANZIMAN ARKA GÖVDE | HOUSING | | | | | | | | | | ♦ |
| 43 | | 945 260 6812 | (945 261 4526) | 1 | ŞANZIMAN ARKA GÖVDE | HOUSING | | | ♦ | ♦ | ♦ | | | | | |
| 43 | | 945 261 3503 | | 1 | ŞANZIMAN ARKA GÖVDE | HOUSING | | | ♦ | ♦ | | | | | | |
| 43 | | 945 261 3826 | | 1 | ŞANZIMAN ARKA GÖVDE | HOUSING | | | ♦ | ♦ | | | | | | |
| 43 | | 945 260 6912 | (945 261 4326) | 1 | ŞANZIMAN ARKA GÖVDE | HOUSING | | | ♦ | | | | | | | |
| 44 | K21.06026 | 945 265 3074 | (945 265 1474) | 2 | HİLAL CİVATASI | PIN | | | ♦ | ♦ | ♦ | ♦ | ♦ | ♦ | ♦ | ♦ |
| | | | (945 265 1774) | | | | | | | | | | | | | |
| | | | (945 265 2674) | | | | | | | | | | | | | |
| 45 | K21.04307 | 960 265 0774 | (945 265 1274) | 2 | HİLAL CİVATASI | PIN | | | ♦ | ♦ | ♦ | ♦ | ♦ | ♦ | ♦ | ♦ |
| | | | (945 265 2774) | | | | | | | | | | | | | |
| | | | (945 265 2974) | | | | | | | | | | | | | |
| 46 | | 389 993 5301 | | 1 | YAĞ BASINÇ YAYI | SPRING | | | ♦ | ♦ | ♦ | ♦ | ♦ | ♦ | ♦ | ♦ |
| 47 | | 389 269 1026 | (389 269 0926) | 1 | YAĞ BASINÇ VALFİ | SELECTOR VALVE | | | ♦ | ♦ | ♦ | ♦ | ♦ | ♦ | ♦ | ♦ |
| 48 | K21.04210 | 013 997 0148 | (020 997 8348) | 1 | YAĞ BASINÇ ORİNGİ | O-RING | 13,3X2,4mm | | ♦ | ♦ | ♦ | ♦ | ♦ | ♦ | ♦ | ♦ |
| 49 | | 389 269 1444 | (389 269 0744) | 1 | YAĞ BASINÇ VALF GÖVDESİ | VALVE INSERT | | | ♦ | ♦ | ♦ | ♦ | ♦ | ♦ | ♦ | ♦ |
| 50 | | 389 993 4401 | | 1 | YAĞ BASINÇ VALF MİL YAYI | SPRING | | | ♦ | ♦ | ♦ | ♦ | ♦ | ♦ | ♦ | ♦ |
| 51 | | 389 269 0826 | | 1 | YAĞ BASINÇ VALF MİLİ | SELECTOR VALVE | | | ♦ | ♦ | ♦ | ♦ | ♦ | ♦ | ♦ | ♦ |
| 52 | | 389 269 0844 | | 1 | YAĞ BASINÇ VALF TOPU | BALL | | | ♦ | ♦ | ♦ | ♦ | ♦ | ♦ | ♦ | ♦ |
| 53 | K21.04212 | 013 997 0048 | (020 997 8248) | 1 | YAĞ BASINÇ VALF ORİNGİ | O-RING | 19,2X3mm | | ♦ | ♦ | ♦ | ♦ | ♦ | ♦ | ♦ | ♦ |

NOTES :
Parts encoded alphabetic and numaric are used together.

GEARBOX TYPE:
715520 - 715521 - 715527 - G240 - 16 /11,7 - 0,69 NEW
715260 - G240 - 16 /11,7 - 0,69 EPS
715261 - 715400 - 715410 - 715411 - G240 - 16 /11,7 - 0,69 OLD

NOTLAR :
Alfabetik ve rakam ile kodlanan parçalar birlikte kullanılır.

ŞANZIMAN TİPLERİ:
715520 - 715521 - 715527 - G240 - 16 /11,7 - 0,69 NEW
715260 - G240 - 16 /11,7 - 0,69 EPS
715261 - 715400 - 715410 - 715411 - G240 - 16 /11,7 - 0,69 OLD





Original parts names, oem numbers, symbols and descriptions used in this catalogue are for reference purposes only.

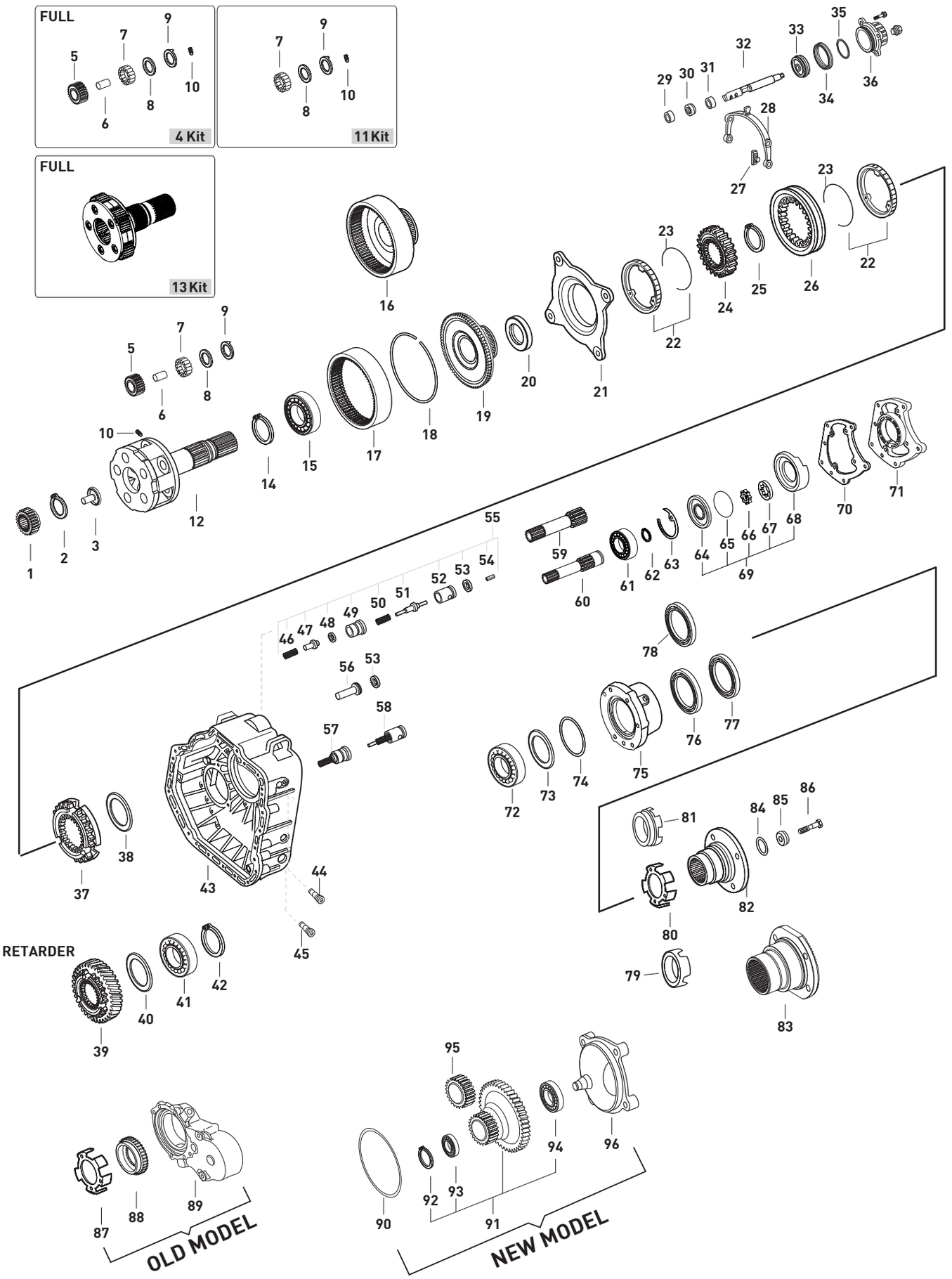






Original parts names, oem numbers, symbols and descriptions used in this catalogue are for reference purposes only.

| Fig. | Kacmaz No | Oem No | Oem Old No | Pcs. | Ürün Tanımı | Description | Sizes | Not | 715520 | 715521 | 715527 | 715260 | 715261 | 715400 | 715410 | 715411 |
|---|---|---|---|---|---|---|---|---|---|---|---|---|---|---|---|---|
| 54 | | 001481 004001 | (001481 004049) | 1 | EMNİYET PİMİ | CLAMPING SLEEVE | | | ♦ | ♦ | ♦ | ♦ | ♦ | ♦ | ♦ | ♦ |
| 55 | K21.06962 | 655 260 0157 | | Kit | YAĞ BASINÇ VALFİ KOMPLE | VALVE KIT | | | ♦ | ♦ | ♦ | ♦ | ♦ | ♦ | ♦ | ♦ |
| 56 | K21.06979 | 389 265 0176 | (389 265 0076) | 1 | YAĞ BASINÇ VALFİ ALIN FİBERİ | WASHER | | | ♦ | ♦ | ♦ | ♦ | ♦ | ♦ | ♦ | ♦ |
| 57 | K21.06953 | 960 260 1057 | | Kit | YAĞ BASINÇ VALFİ KOMPLE | VALVE KIT | | | ♦ | ♦ | ♦ | ♦ | ♦ | ♦ | ♦ | ♦ |
| 58 | K21.06973 | 960 260 1257 | | Kit | YAĞ BASINÇ VALFİ KOMPLE | VALVE KIT | | | ♦ | ♦ | ♦ | ♦ | ♦ | ♦ | ♦ | ♦ |
| 59 | K21.03670 | 947 264 0105 | | 1 | YAĞ POMPA MİLİ (RETARDER) | OIL PUMP SHAFT | | (5) | ♦ | ♦ | ♦ | | | | | |
| 59 | K21.03085 | 947 264 0005 | (389 269 0310) | 1 | YAĞ POMPA MİLİ | OIL PUMP SHAFT | | (5) | ♦ | ♦ | | ♦ | ♦ | ♦ | ♦ | ♦ |
| | | | (389 269 1210) | | | | | | | | | | | | | |
| 60 | K21.03198 | 947 269 1010 | (945 269 1010) | 1 | YAĞ POMPA MİLİ | OIL PUMP SHAFT | | (6) | ♦ | ♦ | ♦ | | | | | |
| 60 | K21.06298 | 947 269 1110 | (945 269 1110) | 1 | YAĞ POMPA MİLİ | OIL PUMP SHAFT | | (6) | ♦ | ♦ | ♦ | | | | | |
| 61 | K21.03613 | 004 981 9225 | (004 981 8625) | 1 | PTO MİL BİLYASI | ROLLER BEARING | 45X75X16mm | (5) | ♦ | ♦ | | ♦ | ♦ | ♦ | ♦ | ♦ |
| | | | (004 981 9025) | | | | | | | | | | | | | |
| 61 | K21.03648 | 010 981 9025 | (010 981 8425) | 1 | PTO MİL BİLYASI | ROLLER BEARING | | (6) | ♦ | ♦ | ♦ | | | | | |
| | | | (008 981 5425) | | | | | | | | | | | | | |
| | | | (008 981 3425) | | | | | | | | | | | | | |
| | | | (400 981 2525) | | | | | | | | | | | | | |
| 62 | K21.06964 | 000471 045000 | (003 994 3741) | 1 | PTO MİL BİLYA SEKMANI | RETAINING RING | 1,75mm | (5) | ♦ | ♦ | | ♦ | ♦ | ♦ | ♦ | ♦ |
| 62 | | 912009 045100 | | 1 | PTO MİL BİLYA SEKMANI | RETAINING RING | | (6) | ♦ | ♦ | ♦ | | | | | |
| 63 | K21.94304 | | | 1 | YAĞ POMPA PULU | SPACER WASHER | 0,70mm | | ♦ | ♦ | ♦ | ♦ | ♦ | ♦ | ♦ | ♦ |
| 63 | K21.04304 | 389 262 6254 | | 1 | YAĞ POMPA PULU | SPACER WASHER | 0,80mm | | ♦ | ♦ | ♦ | ♦ | ♦ | ♦ | ♦ | ♦ |
| 63 | K21.04303 | 389 262 5954 | | 1 | YAĞ POMPA PULU | SPACER WASHER | 0,90mm | | ♦ | ♦ | ♦ | ♦ | ♦ | ♦ | ♦ | ♦ |
| 63 | K21.04302 | 389 262 5754 | | 1 | YAĞ POMPA PULU | SPACER WASHER | 1,00mm | | ♦ | ♦ | ♦ | ♦ | ♦ | ♦ | ♦ | ♦ |
| 63 | K21.04301 | 389 262 5554 | | 1 | YAĞ POMPA PULU | SPACER WASHER | 1,10mm | | ♦ | ♦ | ♦ | ♦ | ♦ | ♦ | ♦ | ♦ |
| 63 | K21.04305 | 389 262 5354 | | 1 | YAĞ POMPA PULU | SPACER WASHER | 1,20mm | | ♦ | ♦ | ♦ | ♦ | ♦ | ♦ | ♦ | ♦ |
| 64 | K21.03558 | 947 264 0287 | | 1 | YAĞ POMPA KAPAĞI | OIL PUMP COVER | | PTO | ♦ | ♦ | ♦ | ♦ | ♦ | ♦ | ♦ | ♦ |
| 64 | K21.03412 | 945 269 0201 | (389 269 2501) | 1 | YAĞ POMPA KAPAĞI | OIL PUMP COVER | | | ♦ | ♦ | ♦ | ♦ | ♦ | ♦ | ♦ | ♦ |
| 65 | K21.03511 | 029 997 5748 | | 1 | YAĞ POMPA KAPAK ORİNGİ | O-RING | 112X2,5mm | | ♦ | ♦ | ♦ | ♦ | ♦ | ♦ | ♦ | ♦ |
| 66 | K21.03413 | 389 269 1406 | (389 269 1506) | 1 | YAĞ POMPA İÇ ROTOR | OIL PUMP GEAR | | | ♦ | ♦ | ♦ | ♦ | ♦ | ♦ | ♦ | ♦ |
| | | | (945 260 0090) | | | | | | | | | | | | | |
| 67 | K21.03414 | 389 269 0706 | (389 269 1206) | 1 | YAĞ POMPA DIŞ ROTOR | ROTOR | | | ♦ | ♦ | ♦ | ♦ | ♦ | ♦ | ♦ | ♦ |
| 68 | K21.03478 | 947 269 1001 | | 1 | YAĞ POMPA GÖVDESİ | OIL PUMP HOUSING | | (M) | ♦ | ♦ | ♦ | ♦ | ♦ | ♦ | ♦ | ♦ |
| 68 | K21.03415 | 389 269 3801 | | 1 | YAĞ POMPA GÖVDESİ | OIL PUMP HOUSING | | (N) | ♦ | ♦ | ♦ | ♦ | ♦ | ♦ | ♦ | ♦ |
| 69 | K21.03475 | 389 260 0790 | | 1 | YAĞ POMPASI | OIL PUMP | | (M) | ♦ | ♦ | ♦ | ♦ | ♦ | ♦ | ♦ | ♦ |
| 69 | K21.03411 | 389 260 0690 | (389 260 0590) | 1 | YAĞ POMPASI | OIL PUMP | | (N) | ♦ | ♦ | ♦ | ♦ | ♦ | ♦ | ♦ | ♦ |
| 70 | K21.06587 | 389 261 1980 | (389 261 1480) | 1 | PTO KAPAK CONTASI | GASKET | | | | | | ♦ | | ♦ | ♦ | |
| 70 | K21.03667 | 945 261 0680 | (945 261 0580) | 1 | PTO KAPAK CONTASI | GASKET | | | | | | ♦ | ♦ | ♦ | ♦ | ♦ |
| | | | (945 261 0080) | | | | | | | | | | | | | |
| 70 | K21.04306 | 945 261 0280 | | 1 | PTO KAPAK CONTASI | GASKET | | | ♦ | ♦ | ♦ | | | | | |
| 71 | K21.06260 | 389 261 2433 | (389 261 1033) | 1 | PTO KAPAĞI | COVER | | | | | | ♦ | ♦ | ♦ | ♦ | ♦ |
| | | | (389 261 0933) | | | | | | | | | | | | | |
| 71 | K21.03566 | 945 261 1033 | (945 261 1433) | 1 | PTO KAPAĞI | COVER | | | ♦ | ♦ | ♦ | | | | | |
| | | | (400 261 1133) | | | | | | | | | | | | | |
| 72 | K21.03617 | 004 981 9325 | (004 981 8925) | 1 | ŞANZIMAN ARKA BİLYA | ROLLER BEARING | 85X150X28mm | (B) | | | | ♦ | ♦ | ♦ | ♦ | ♦ |
| | | | (004 981 8525) | | | | | | | | | | | | | |
| 72 | K21.03625 | 008 981 3025 | (008 981 5225) | 1 | ŞANZIMAN ARKA BİLYA | ROLLER BEARING | 80X150X28mm | (A) | ♦ | ♦ | ♦ | ♦ | ♦ | ♦ | ♦ | ♦ |
| | | | (007 981 3325) | | | | | | | | | | | | | |
| 73 | K21.04081 | 389 262 7754 | | 1 | ŞANZIMAN HEYKEL AYAR PULU | THRUST WASHER | 1,40mm | | ♦ | ♦ | ♦ | ♦ | ♦ | ♦ | ♦ | ♦ |
| 73 | K21.04139 | 389 262 5152 | | 1 | ŞANZIMAN HEYKEL AYAR PULU | THRUST WASHER | 0,80mm | | ♦ | ♦ | ♦ | ♦ | ♦ | ♦ | ♦ | ♦ |
| 73 | K21.04080 | 389 262 5052 | | 1 | ŞANZIMAN HEYKEL AYAR PULU | THRUST WASHER | 0,40mm | | ♦ | ♦ | ♦ | ♦ | ♦ | ♦ | ♦ | ♦ |
| 73 | K21.04079 | 389 262 7654 | | 1 | ŞANZIMAN HEYKEL AYAR PULU | THRUST WASHER | 0,25mm | | ♦ | ♦ | ♦ | ♦ | ♦ | ♦ | ♦ | ♦ |
| 73 | K21.04140 | 389 262 4952 | | 1 | ŞANZIMAN HEYKEL AYAR PULU | THRUST WASHER | 0,20mm | | ♦ | ♦ | ♦ | ♦ | ♦ | ♦ | ♦ | ♦ |
| 73 | K21.04141 | 389 262 4852 | | 1 | ŞANZIMAN HEYKEL AYAR PULU | THRUST WASHER | 0,15mm | | ♦ | ♦ | ♦ | ♦ | ♦ | ♦ | ♦ | ♦ |
| 73 | K21.04078 | 389 262 4752 | | 1 | ŞANZIMAN HEYKEL AYAR PULU | THRUST WASHER | 0,10mm | | ♦ | ♦ | ♦ | ♦ | ♦ | ♦ | ♦ | ♦ |

NOTES :
Parts encoded alphabetic and numaric are used together.

GEARBOX TYPE:
715520 - 715521 - 715527 - G240 - 16 /11,7 - 0,69 NEW
715260 - G240 - 16 /11,7 - 0,69 EPS
715261 - 715400 - 715410 - 715411 - G240 - 16 /11,7 - 0,69 OLD

NOTLAR :
Alfabetik ve rakam ile kodlanan parçalar birlikte kullanılır.

ŞANZIMAN TİPLERİ:
715520 - 715521 - 715527 - G240 - 16 /11,7 - 0,69 NEW
715260 - G240 - 16 /11,7 - 0,69 EPS
715261 - 715400 - 715410 - 715411 - G240 - 16 /11,7 - 0,69 OLD





Original parts names, oem numbers, symbols and descriptions used in this catalogue are for reference purposes only.

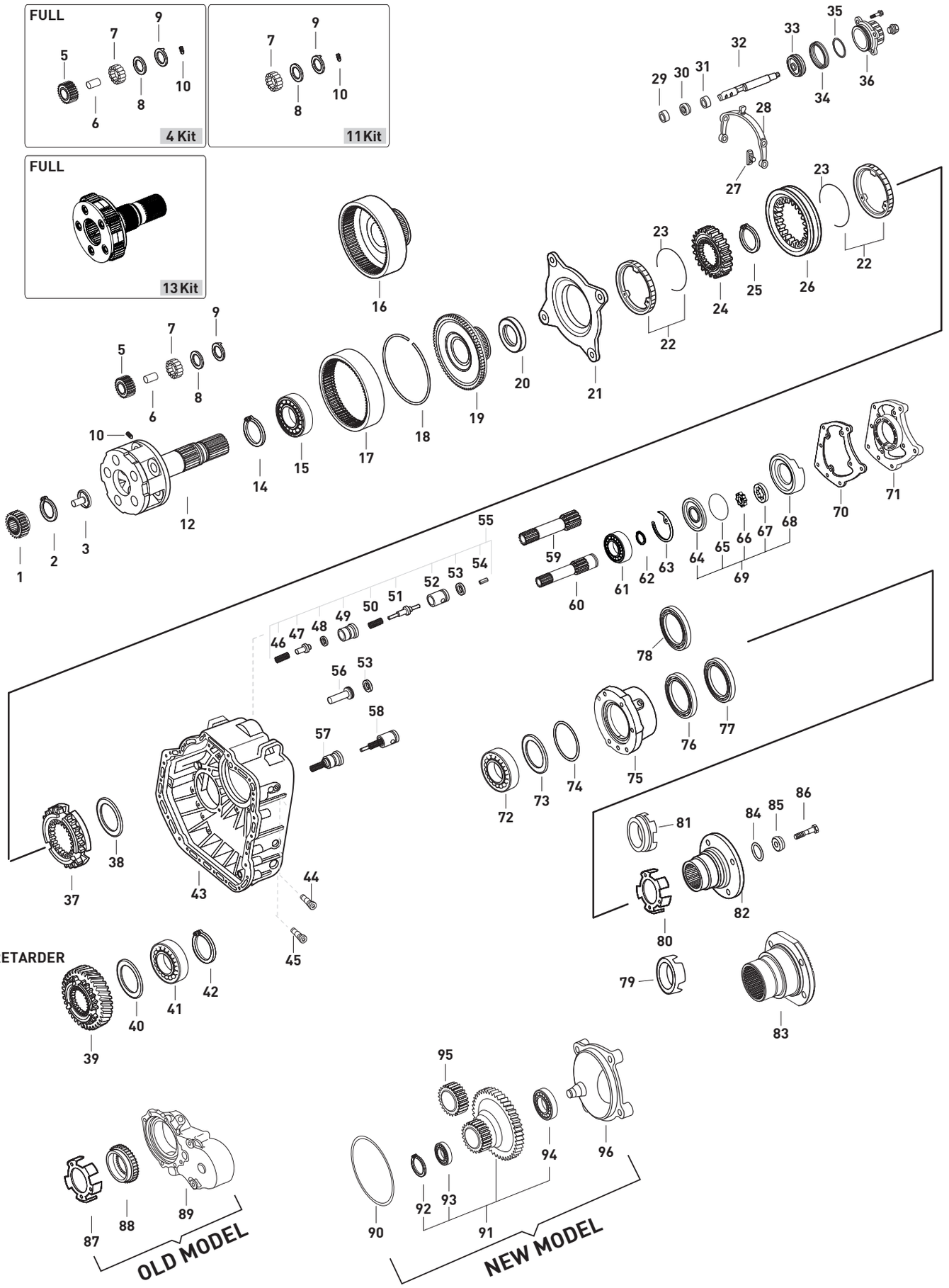






Original parts names, oem numbers, symbols and descriptions used in this catalogue are for reference purposes only.

| Fig. | Kacmaz No | Oem No | Oem Old No | Pcs. | Ürün Tanımı | Description | Sizes | Not | 715520 | 715521 | 715527 | 715260 | 715261 | 715400 | 715410 | 715411 |
|---|---|---|---|---|---|---|---|---|---|---|---|---|---|---|---|---|
| 74 | K21.06713 | 015 997 2848 | (020 997 8548) | 1 | ŞANZIMAN ARKA KAPAK ORİNGİ | O-RING | 149,5X3mm | | ♦ | ♦ | ♦ | ♦ | ♦ | ♦ | ♦ | ♦ |
| 75 | K21.06237 | 389 261 0420 | (389 261 0520) | 1 | ŞANZIMAN ARKA KAPAK | COVER | | OLD | | | | ♦ | ♦ | ♦ | ♦ | ♦ |
| 75 | K21.06238 | 389 261 1920 | (389 261 2020) | 1 | ŞANZIMAN ARKA KAPAK | COVER | | NEW | ♦ | ♦ | ♦ | ♦ | ♦ | ♦ | | |
| 75 | K21.06239 | 930 261 0420 | (930 261 0520) | 1 | ŞANZIMAN ARKA KAPAK | COVER | | RETARDER | ♦ | ♦ | ♦ | | | | | |
| | | | (389 261 1820) | | | | | | | | | | | | | |
| 76 | K21.03507 | 013 997 7347 | (015 997 4247) | 1 | ŞANZIMAN ARKA KEÇE | OIL SEAL | 95X115X13/12mm | | ♦ | ♦ | ♦ | ♦ | ♦ | ♦ | ♦ | ♦ |
| | | | (013 997 5647) | | | | | | | | | | | | | |
| 77 | K21.03528 | 013 997 7247 | (014 997 1947) | 1 | ŞANZIMAN ARKA KEÇE | OIL SEAL | 95X115X13mm | | ♦ | ♦ | ♦ | ♦ | ♦ | ♦ | ♦ | ♦ |
| | | | (013 997 5547) | | | | | | | | | | | | | |
| 78 | K21.03512 | 015 997 7846 | (023 997 1647) | 1 | ŞANZIMAN ARKA KEÇE | OIL SEAL | 95X115X15,5mm | | ♦ | ♦ | ♦ | ♦ | ♦ | ♦ | ♦ | ♦ |
| 79 | | 945 262 0528 | (389 260 0150) | 1 | ŞANZIMAN KM DEVİR SACI | PULSE STAR | | (7)(11) | ♦ | ♦ | | ♦ | ♦ | ♦ | | |
| 80 | K21.04134 | 930 262 0028 | | 1 | ŞANZIMAN KM DEVİR SACI | PULSE STAR | | (8)(9)(10)(12) | ♦ | ♦ | | ♦ | ♦ | ♦ | | |
| 80 | | 945 262 0228 | | 1 | ŞANZIMAN KM DEVİR SACI | PULSE STAR | | (9) | ♦ | ♦ | | ♦ | ♦ | ♦ | ♦ | ♦ |
| 81 | | 945 262 0628 | (389 260 0350) | 1 | ŞANZIMAN KM DEVİR SACI | PULSE STAR | | (8) | ♦ | ♦ | | ♦ | ♦ | ♦ | | |
| 82 | K21.03084 | 389 262 0445 | | 1 | ŞANZIMAN FLANŞI | COMPANION FLANGE | 4-H, Ø180mm | (7) | ♦ | ♦ | | ♦ | ♦ | | | |
| 82 | K21.03196 | 945 262 0045 | | 1 | ŞANZIMAN FLANŞI | COMPANION FLANGE | 4-H, Ø180mm | (8) | ♦ | ♦ | | ♦ | ♦ | | | |
| 83 | K21.06052 | 945 262 0245 | | 1 | ŞANZIMAN FLANŞI | COMPANION FLANGE | 4-H, Ø200mm | (9) | | | | | | ♦ | ♦ | ♦ |
| 83 | K21.03211 | 930 262 0045 | | 1 | ŞANZIMAN FLANŞI | COMPANION FLANGE | 4-H, Ø200mm | (10) | ♦ | ♦ | ♦ | | | | | |
| 83 | K21.03129 | 389 262 0645 | | 1 | ŞANZIMAN FLANŞI | COMPANION FLANGE | 4-H, Ø200mm | (11) | | | | | | ♦ | ♦ | ♦ |
| 83 | K21.03443 | 930 262 0245 | | 1 | ŞANZIMAN FLANŞI | COMPANION FLANGE | 4-H, Ø180mm | (12) | ♦ | ♦ | | | | | | |
| 84 | K21.04310 | 014 997 5148 | (020 997 8648) | 1 | ŞANZIMAN FLANŞ ORİNGİ | O-RING | 72,4X5,3mm | | ♦ | ♦ | ♦ | ♦ | ♦ | ♦ | ♦ | ♦ |
| 84 | K21.06978 | 015 997 4348 | | 1 | ŞANZIMAN FLANŞ ORİNGİ | O-RING | 25x3mm | (E) | ♦ | ♦ | ♦ | ♦ | ♦ | ♦ | ♦ | ♦ |
| 85 | K21.04214 | 945 262 0762 | | 1 | ŞANZIMAN FLANŞI ALIN PULU | THRUST WASHER | 93X20mm | (C) | ♦ | ♦ | ♦ | ♦ | ♦ | ♦ | ♦ | ♦ |
| 85 | K21.06977 | 389 262 0362 | (945 262 0062) | 1 | ŞANZIMAN FLANŞI ALIN PULU | THRUST WASHER | 95X24mm | (D) | ♦ | ♦ | ♦ | ♦ | ♦ | ♦ | ♦ | ♦ |
| 85 | K21.06283 | 387 264 1162 | | 1 | ŞANZIMAN FLANŞI ALIN PULU | THRUST WASHER | | (E) | ♦ | ♦ | ♦ | ♦ | ♦ | ♦ | ♦ | ♦ |
| 86 | K21.06280 | 000000 006750 | (000000 005728) | 1 | ŞANZIMAN FLANŞI ALIN VİDASI | SCREW | M20X1,5X80 | (C) | ♦ | ♦ | ♦ | ♦ | ♦ | ♦ | ♦ | ♦ |
| 86 | K21.06028 | 945 990 0019 | (389 990 2019) | 1 | ŞANZIMAN FLANŞI ALIN VİDASI | SCREW | M24X2X85 | (D) | ♦ | ♦ | ♦ | ♦ | ♦ | ♦ | ♦ | ♦ |
| | | | (389 990 0219) | | | | | | | | | | | | | |
| 86 | K21.06281 | 387 990 1719 | | 1 | ŞANZIMAN FLANŞI ALIN VİDASI | SCREW | M24X2X95 | (E) | ♦ | ♦ | ♦ | ♦ | ♦ | ♦ | ♦ | ♦ |
| 87 | K21.04083 | 387 262 0828 | (387 262 0428) | 1 | ŞANZIMAN KM DEVİR SACI | PULSE STAR | | | ♦ | ♦ | | | | | ♦ | ♦ |
| 88 | | 389 264 0021 | (945 264 0121) | 1 | ŞANZIMAN KM DİŞLİSİ 64 DİŞ | GEAR | | | ♦ | ♦ | | | | | ♦ | ♦ |
| 89 | K21.06279 | 389 261 1120 | | 1 | ŞANZIMAN ARKA KAPAK | COVER | | | ♦ | ♦ | | | | | ♦ | ♦ |
| 90 | | 017 997 9145 | (028 997 8148) | 1 | ŞANZIMAN ARKA KAPAK ORİNGİ | O-RING | 198X3mm | | ♦ | ♦ | ♦ | | | | | |
| 91 | K21.06312 | 930 264 0821 | | 1 | DİREKSİYON POMPA DİŞLİSİ | GEAR | | | ♦ | ♦ | ♦ | | | | | |
| 92 | | 000983 020000 | | 1 | DİREK.POMPA DİŞLİ BİLYA SEKMANI | RETAINING RING | | | ♦ | ♦ | ♦ | | | | | |
| 93 | | 000625 006004 | | 1 | DİREKSİYON POMPA DİŞLİ ÖN BİLYA | ROLLER BEARING | | | ♦ | ♦ | ♦ | | | | | |
| 94 | | 000625 506007 | | 1 | DİREKSİYON POMPA DİŞLİ ARKA BİLYA | ROLLER BEARING | | | ♦ | ♦ | ♦ | | | | | |
| 95 | K21.03671 | 930 264 0721 | | 1 | DİREKSİYON POMPA DİŞLİ KARŞILIĞI | GEAR | | | ♦ | ♦ | ♦ | | | | | |
| 96 | K21.06300 | 930 264 0111 | (930 264 0211) | 1 | DİREKSİYON POMPA KAPAĞI | HOUSING | | | ♦ | ♦ | ♦ | | | | | |

NOTES :
Parts encoded alphabetic and numaric are used together.

GEARBOX TYPE:
715520 - 715521 - 715527 - G240 - 16 /11,7 - 0,69 NEW
715260 - G240 - 16 /11,7 - 0,69 EPS
715261 - 715400 - 715410 - 715411 - G240 - 16 /11,7 - 0,69 OLD

NOTLAR :
Alfabetik ve rakam ile kodlanan parçalar birlikte kullanılır.

ŞANZIMAN TİPLERİ:
715520 - 715521 - 715527 - G240 - 16 /11,7 - 0,69 NEW
715260 - G240 - 16 /11,7 - 0,69 EPS
715261 - 715400 - 715410 - 715411 - G240 - 16 /11,7 - 0,69 OLD





Original parts names, oem numbers, symbols and descriptions used in this catalogue are for reference purposes only.

SYNCHRONIZER KIT CONSTANT
NEW MODEL

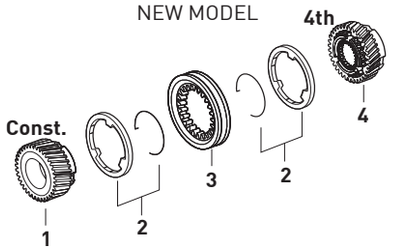


| Fig. | Kacmaz No. | Oem No | Oem Old No | Pcs. | Ürün Tanımı | Description |
|---|---|---|---|---|---|---|
| | K21.06510 | | | Kit | TAKVİYE SENK.KİT | SYNCH.KIT CONST. |
| 1 | K21.03130 | 945 262 9817 | (945 262 5417) | 1 | TAKVİYE DİŞLİSİ 32 DİŞ | CONSTANT GEAR 32 T. |
| 2 | K21.03136 | 945 260 2245 | (946 262 6337) | 2 | TAKVİYE FRENLEME (Mo) | SYNCHRONIZING CONE / Mo |
| 3 | K21.03137 | 945 262 6823 | (945 262 6423) | 1 | TAKVİYE HALKA | ENGAGING SLEEVE |
| 4 | K21.03220 | 945 262 9517 | (945 262 5617) | 1 | 4.VİTES DİŞLİSİ 36 DİŞ | GEAR 4th 36 T. |

SYNCHRONIZER KIT CONST.
NEW MODEL

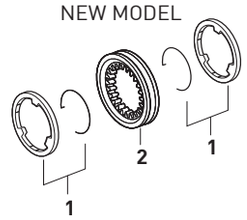


| Fig. | Kacmaz No. | Oem No | Oem Old No | Pcs. | Ürün Tanımı | Description |
|---|---|---|---|---|---|---|
| | K21.06224 | | | Kit | TAKVİYE SENK.KİT | SYNCHRONIZER KIT Const |
| 1 | K21.03136 | 945 260 2245 | (946 262 6337) | 2 | TAKVİYE FRENLEME (Mo) | SYNCHRONIZING CONE / Mo |
| 2 | K21.03137 | 945 262 6823 | (945 262 6423) | 1 | TAKVİYE HALKA | ENGAGING SLEEVE |

SYNCHRONIZER KIT CONSTANT
OLD MODEL

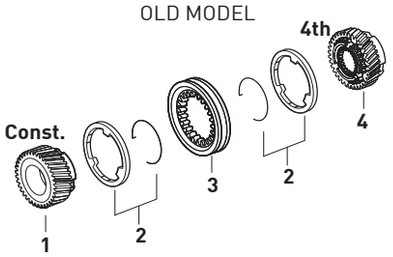


| Fig. | Kacmaz No. | Oem No | Oem Old No | Pcs. | Ürün Tanımı | Description |
|---|---|---|---|---|---|---|
| | K21.06511 | | | Kit | TAKVİYE SENK.KİT | SYNCH.KIT CONST. |
| 1 | K21.03030 | 945 262 4110 | (945 262 1610) | 1 | TAKVİYE DİŞLİSİ 32 DİŞ | CONSTANT GEAR 32 T. |
| 2 | K21.03015 | 389 262 0637 | (387 262 0837) | 2 | TAK.SENK.FRENLEME (Mo) | SYNCHRONIZER CONE / Mo |
| 3 | K21.03002 | 945 262 2823 | (945 262 0623) | 1 | TAKVİYE HALKA | ENGAGING SLEEVE |
| 4 | K21.03221 | 389 262 7910 | (945 262 2810) | 1 | 4.VİTES DİŞLİSİ 36 DİŞ | GEAR 4th 36 T. |

SYNCHRONIZER KIT CONST.
OLD MODEL

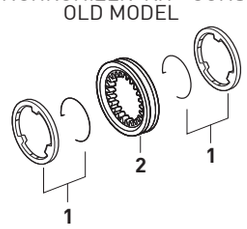


| Fig. | Kacmaz No. | Oem No | Oem Old No | Pcs. | Ürün Tanımı | Description |
|---|---|---|---|---|---|---|
| | K21.06225 | | | Kit | TAK.SENKROMENÇ KİT | SYNCHRONIZER KIT Const |
| 1 | K21.03015 | 389 262 0637 | (387 262 0837) | 2 | TAK.SENK.FRENLEME (Mo) | SYNCHRONIZER CONE / Mo |
| 2 | K21.03002 | 945 262 2823 | (945 262 0323) | 1 | TAKVİYE HALKA | ENGAGING SLEEVE |

SYNCHRONIZER KIT 3rd/4th
NEW MODEL

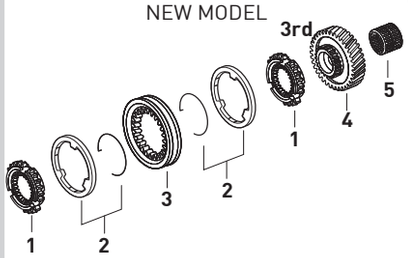


| Fig. | Kacmaz No. | Oem No | Oem Old No | Pcs. | Ürün Tanımı | Description |
|---|---|---|---|---|---|---|
| | K21.06513 | | | Kit | 3./4.VİTES SENK.KİT | SYNCH.KIT 3rd/4th |
| 1 | K21.03146 | 945 262 8234 | (945 262 5434) | 2 | 3./4.VİTES SENKROMENÇ | ENGAGING RING |
| 2 | K21.03148 | 947 260 1945 | (947 260 4645) | 2 | 3./4.VİTES FRENLEME (Mo) | SYNCHRONIZER CONE / Mo |
| | | | (946 262 6137) | | | |
| 3 | K21.03151 | 945 262 6523 | (930 262 0523) | 1 | 3./4.VİTES HALKA | ENGAGING SLEEVE |
| 4 | K21.03223 | 389 262 3713 | (945 262 3913) | 1 | 4.VİTES DİŞLİSİ 29 DİŞ | GEAR 4th 29 T. |
| 5 | K21.03810 | 018 981 6610 | (010 981 5310) | 1 | 4.VİTES MASURA BİLYA | NEEDLE CAGE 85X93X53mm |

SYNCHRONIZER KIT 3rd/4th
NEW MODEL

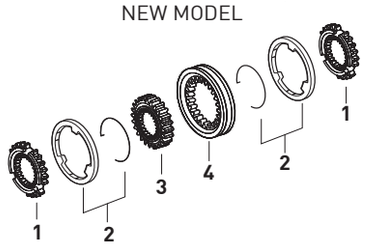


| Fig. | Kacmaz No. | Oem No | Oem Old No | Pcs. | Ürün Tanımı | Description |
|---|---|---|---|---|---|---|
| | K21.06211 | | | Kit | 3./4.VİTES SENK.KİT | SYNCH.KIT 3rd/4th |
| 1 | K21.03146 | 945 262 8234 | (945 262 5434) | 2 | 3./4.VİTES SENKROMENÇ | ENGAGING RING |
| 2 | K21.03148 | 947 260 1945 | (947 260 4645) | 2 | 3./4.VİTES FRENLEME (Mo) | SYNCHRONIZER CONE / Mo |
| | | | (946 262 6137) | | | |
| 3 | K21.03149 | 389 262 4735 | (389 262 4635) | 1 | 3./4.VİTES YILDIZ DİŞLİ | SYNCHRONIZER HUB |
| 4 | K21.03151 | 945 262 6523 | (930 262 0523) | 1 | 3./4.VİTES HALKA | ENGAGING SLEEVE |

SYNCHRONIZER KIT 3rd/4th
NEW MODEL

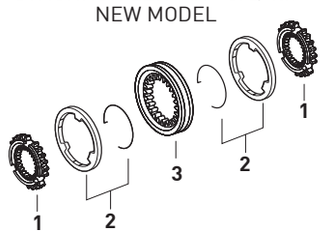


| Fig. | Kacmaz No. | Oem No | Oem Old No | Pcs. | Ürün Tanımı | Description |
|---|---|---|---|---|---|---|
| | K21.06512 | | | Kit | 3./4.VİTES SENK.KİT | SYNCH.KIT 3rd/4th |
| 1 | K21.03146 | 945 262 8234 | (945 262 5434) | 2 | 3./4.VİTES SENKROMENÇ | ENGAGING RING |
| 2 | K21.03148 | 947 260 1945 | (947 260 4645) | 2 | 3./4.VİTES FRENLEME (Mo) | SYNCHRONIZER CONE / Mo |
| | | | (946 262 6137) | | | |
| 3 | K21.03151 | 945 262 6523 | (930 262 0523) | 1 | 3./4.VİTES HALKA | ENGAGING SLEEVE |

**Original parts names, oem numbers, symbols and descriptions used in this catalogue are for reference purposes only.**

| Fig. | Kacmaz No. | Oem No | Oem Old No | Pcs. | Ürün Tanımı | Description |
|---|---|---|---|---|---|---|
| | K21.06515 | | | Kit | 3./4 .VİTES SENK.KİT | SYNCH.KIT 3rd/4th |
| 1 | K21.03027 | 945 262 0534 | (389 262 5034) | 2 | 3./4.VİTES SENKROMENÇ | ENGAGING RING |
| 2 | K21.03016 | 389 262 0737 | (387 262 0937) | 2 | 3./4.VİT.FRENLEME (Mo) | SYNCHRONIZING CONE / Mo |
| 3 | K21.03149 | 389 262 4735 | (389 262 4635) | 1 | 3./4.VİTES YILDIZ DİŞLİ | SYNCHRONIZER HUB |
| 4 | K21.03223 | 389 262 3713 | (945 262 3913) | 1 | 3.VİTES DİŞLİSİ 29 DİŞ | GEAR 3rd 29 T. |
| 5 | K21.03810 | 018 981 6610 | (010 981 5310) | 1 | 4.VİT.MASURA BİLYA | NEEDLE CAGE 85X93X53mm |

SYNCHRONIZER KIT 3rd/4th
OLD MODEL

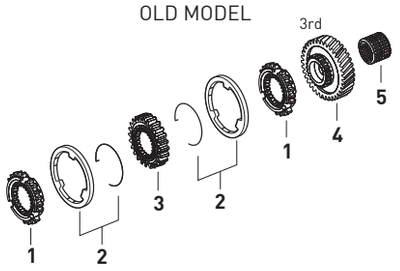


| Fig. | Kacmaz No. | Oem No | Oem Old No | Pcs. | Ürün Tanımı | Description |
|---|---|---|---|---|---|---|
| | K21.06212 | | | Kit | 3./4.VİTES SENK.KİT | SYNCH.KIT 3rd/4th |
| 1 | K21.03027 | 945 262 0534 | (389 262 5034) | 2 | 3./4.VİTES SENKROMENÇ | ENGAGING RING |
| 2 | K21.03016 | 389 262 0737 | (387 262 0937) | 2 | 3./4.VİT.FRENLEME (Mo) | SYNCHRONIZING CONE / Mo |
| 3 | K21.03149 | 389 262 4735 | (389 262 4635) | 1 | 3./4.VİTES YILDIZ DİŞLİ | SYNCHRONIZER HUB |
| 4 | K21.03009 | 945 262 2723 | (945 262 0423) | 1 | 3./4.VİTES HALKA | ENGAGING SLEEVE |
| | | | (389 262 2623) | | | |

SYNCHRONIZER KIT 3rd/4th
OLD MODEL

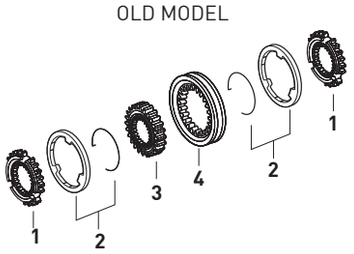


| Fig. | Kacmaz No. | Oem No | Oem Old No | Pcs. | Ürün Tanımı | Description |
|---|---|---|---|---|---|---|
| | K21.06514 | | | Kit | 3./4.VİTES SENK.KİT | SYNCH.KIT 3rd/4th |
| 1 | K21.03027 | 945 262 0534 | (389 262 5034) | 2 | 3./4.VİTES SENKROMENÇ | ENGAGING RING |
| 2 | K21.03016 | 389 262 0737 | (387 262 0937) | 2 | 3./4.VİT.FRENLEME (Mo) | SYNCHRONIZING CONE / Mo |
| 3 | K21.03009 | 945 262 2723 | (945 262 0423) | 1 | 3./4.VİTES HALKA | ENGAGING SLEEVE |
| | | | (389 262 2623) | | | |

SYNCHRONIZER KIT 3rd/4th
OLD MODEL

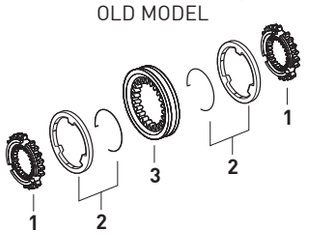


| Fig. | Kacmaz No. | Oem No | Oem Old No | Pcs. | Ürün Tanımı | Description |
|---|---|---|---|---|---|---|
| | K21.06214 | | | Kit | 1./2.VİTES SENK.KİT | SYNCH.KIT 1st/2nd |
| 1 | K21.03160 | 945 262 5534 | | 2 | 1./2.VİTES SENKROMENÇ | ENGAGING RING |
| 2 | K21.03148 | 947 260 1945 | (947 260 4645) | 2 | 1./2.VİT.FRENLEME (Mo) | SYNCHRONIZING CONE / Mo |
| | | | (946 262 6137) | | | |
| 3 | K21.03161 | 389 262 2535 | (945 262 0135) | 1 | 3./4.VİTES YILDIZ DİŞLİ | SYNCHRONIZER HUB |
| 4 | K21.03151 | 945 262 6523 | (930 262 0523) | 1 | 1./2.VİTES HALKA | ENGAGING SLEEVE |

SYNCHRONIZER KIT 1st/2nd
NEW MODEL

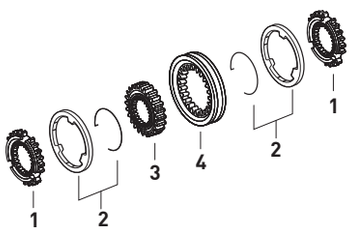


| Fig. | Kacmaz No. | Oem No | Oem Old No | Pcs. | Ürün Tanımı | Description |
|---|---|---|---|---|---|---|
| | K21.06516 | | | Kit | 1./2.VİTES SENK.KİT | SYNCH.KIT 1st/2nd |
| 1 | K21.03160 | 945 262 5534 | | 2 | 1./2.VİTES SENKROMENÇ | ENGAGING RING |
| 2 | K21.03148 | 947 260 1945 | (947 260 4645) | 2 | 1./2.VİT.FRENLEME (Mo) | SYNCHRONIZING CONE / Mo |
| | | | (946 262 6137) | | | |
| 3 | K21.03151 | 945 262 6523 | (930 262 0523) | 1 | 1./2.VİTES HALKA | ENGAGING SLEEVE |

SYNCHRONIZER KIT 1st/2nd
NEW MODEL

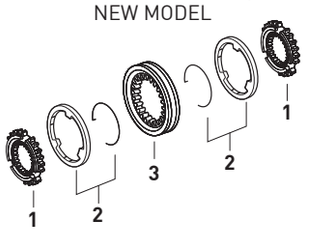


| Fig. | Kacmaz No. | Oem No | Oem Old No | Pcs. | Ürün Tanımı | Description |
|---|---|---|---|---|---|---|
| | K21.06215 | | | Kit | 1./2.VİTES SENK.KİT | SYNCH.KIT 1st/2nd |
| 1 | K21.03025 | 945 262 0434 | (389 262 0034) | 2 | 1./2.VİTES SENKROMENÇ | ENGAGING RING |
| 2 | K21.03016 | 389 262 0737 | (387 262 0937) | 2 | 1./2.VİT.FRENLEME (Mo) | SYNCHRONIZING CONE / Mo |
| 3 | K21.03161 | 389 262 2535 | (945 262 0135) | 1 | 1./2.VİTES YILDIZ DİŞLİ | SYNCHRONIZER HUB |
| 4 | K21.03009 | 945 262 2723 | (945 262 0423) | 1 | 1./2.VİTES HALKA | ENGAGING SLEEVE |
| | | | (389 262 2623) | | | |

SYNCHRONIZER KIT 1st/2nd
OLD MODEL

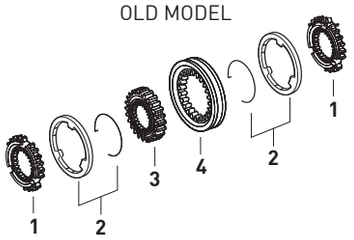


| Fig. | Kacmaz No. | Oem No | Oem Old No | Pcs. | Ürün Tanımı | Description |
|---|---|---|---|---|---|---|
| | K21.06517 | | | Kit | 1./2.VİTES SENK.KİT | SYNCH.KIT 1st/2nd |
| 1 | K21.03025 | 945 262 0434 | (389 262 0034) | 2 | 1./2.VİTES SENKROMENÇ | ENGAGING RING |
| 2 | K21.03016 | 389 262 0737 | (387 262 0937) | 2 | 1./2.VİT.FRENLEME (Mo) | SYNCHRONIZING CONE / Mo |
| 3 | K21.03009 | 945 262 2723 | (945 262 0423) | 1 | 1./2.VİTES HALKA | ENGAGING SLEEVE |
| | | | (389 262 2623) | | | |

SYNCHRONIZER KIT 1st/2nd
OLD MODEL

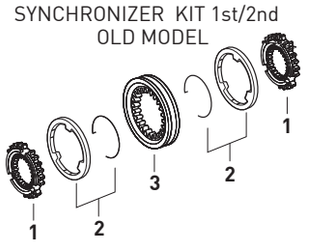




Original parts names, oem numbers, symbols and descriptions used in this catalogue are for reference purposes only.

SYNCHRONIZER KIT PLANETARY
NEW MODEL

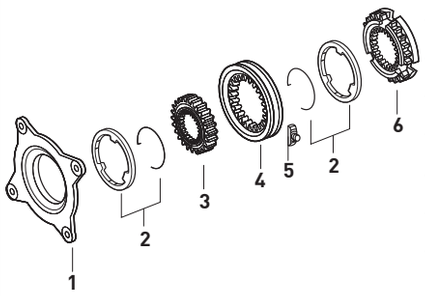


| Fig. | Kacmaz No. | Oem No | Oem Old No | Pcs. | Ürün Tanımı | Description |
|---|---|---|---|---|---|---|
| | K21.06216 | | | Kit | AĞIR SERİ.SENK.KİT | SYNCH.KIT PLANETARY |
| 1 | K21.03037 | 947 260 3036 | (947 260 0836) | 1 | TABLA SENKROMENÇ | FOLLOWER RING |
| 2 | K21.03185 | 947 260 0945 | | 2 | AĞIR SERİ FRENLEME (Mo) | SYNCHRONIZING CONE / Mo |
| 3 | K21.03079 | 389 262 4935 | (389 262 2035) | 1 | A.SERİ YILDIZ DİŞLİ 73 DİŞ | SYNCHRONIZER HUB 73 T. |
| 4 | K21.03033 | 945 262 6923 | (930 262 0623) | 1 | AĞIR SERİ HALKA | ENGAGING SLEEVE |
| 5 | K21.03431 | 960 265 0049 | (947 265 0349) | 2 | A.SERİ HİLAL PABUCU | SLIDING PAD |
| 6 | K21.03186 | 945 262 3834 | | 1 | SERİ SENKROMENÇ | ENGAGING RING |

SYNCHRONIZER KIT PLANETARY
NEW MODEL

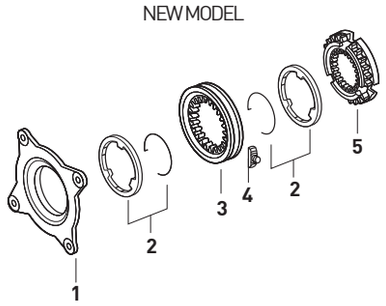


| Fig. | Kacmaz No. | Oem No | Oem Old No | Pcs. | Ürün Tanımı | Description |
|---|---|---|---|---|---|---|
| | K21.06518 | | | Kit | AĞIR SERİ.SENK.KİT | SYNCH.KIT PLANETARY |
| 1 | K21.03037 | 947 260 3036 | (947 260 0836) | 1 | TABLA SENKROMENÇ | FOLLOWER RING |
| 2 | K21.03185 | 947 260 0945 | | 2 | AĞIR SERİ FRENLEME (Mo) | SYNCHRONIZING CONE / Mo |
| 3 | K21.03033 | 945 262 6923 | (930 262 0623) | 1 | AĞIR SERİ HALKA | ENGAGING SLEEVE |
| 4 | K21.03431 | 960 265 0049 | (947 265 0349) | 2 | A.SERİ HİLAL PABUCU | SLIDING PAD |
| 5 | K21.03186 | 945 262 3834 | | 1 | SERİ SENKROMENÇ | ENGAGING RING |

SYNCHRONIZER KIT PLANETARY
NEW MODEL

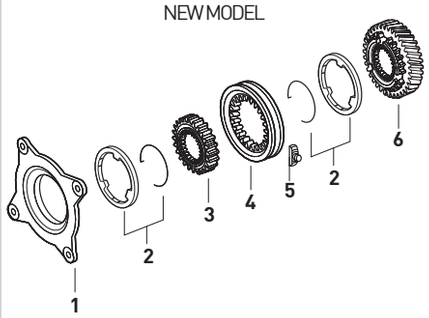


| Fig. | Kacmaz No. | Oem No | Oem Old No | Pcs. | Ürün Tanımı | Description |
|---|---|---|---|---|---|---|
| | K21.07025 | | | Kit | AĞIR SERİ SENK.KİT | SYNCH.KIT PLANETARY |
| 1 | K21.03037 | 947 260 3036 | (947 260 0836) | 1 | TABLA SENKROMENÇ | FOLLOWER RING |
| 2 | K21.03185 | 947 260 0945 | | 2 | AĞIR SERİ FRENLEME (Mo) | SYNCHRONIZING CONE / Mo |
| 3 | K21.03079 | 389 262 4935 | (389 262 2035) | 1 | A.SERİ YILDIZ DİŞLİ 73 DİŞ | SYNCHRONIZER HUB 73 T. |
| 4 | K21.03033 | 945 262 6923 | (930 262 0623) | 1 | AĞIR SERİ HALKA | ENGAGING SLEEVE |
| 5 | K21.03431 | 960 265 0049 | (947 265 0349) | 2 | A.SERİ HİLAL PABUCU | SLIDING PAD |
| 6 | K21.06058 | 930 264 0420 | | 1 | RETARDER DİŞLİSİ | RETARDER GEAR |

SYNCHRONIZER KIT PLANETARY
NEW MODEL

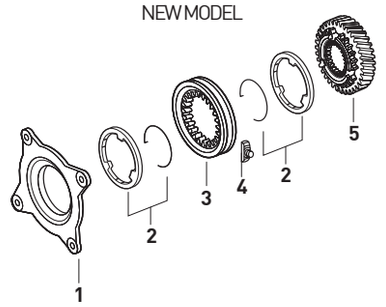


| Fig. | Kacmaz No. | Oem No | Oem Old No | Pcs. | Ürün Tanımı | Description |
|---|---|---|---|---|---|---|
| | K21.06519 | | | Kit | AĞIR SERİ.SENK.KİT | SYNCH.KIT PLANETARY |
| 1 | K21.03037 | 947 260 3036 | (947 260 0836) | 1 | TABLA SENKROMENÇ | FOLLOWER RING |
| 2 | K21.03185 | 947 260 0945 | | 2 | AĞIR SERİ FRENLEME (Mo) | SYNCHRONIZING CONE / Mo |
| 3 | K21.03033 | 945 262 6923 | (930 262 0623) | 1 | AĞIR SERİ HALKA | ENGAGING SLEEVE |
| 4 | K21.03431 | 960 265 0049 | (947 265 0349) | 2 | A.SERİ HİLAL PABUCU | SLIDING PAD |
| 5 | K21.06058 | 930 264 0420 | | 1 | RETARDER DİŞLİSİ | RETARDER GEAR |

SYNCHRONIZER KIT PLANETARY
NEW MODEL

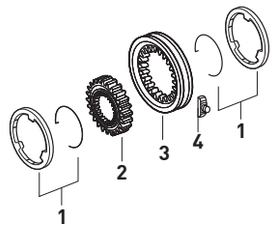


| Fig. | Kacmaz No. | Oem No | Oem Old No | Pcs. | Ürün Tanımı | Description |
|---|---|---|---|---|---|---|
| | K21.06204 | | | Kit | AĞIR SERİ.SENK.KİT | SYNCH.KIT PLANETARY |
| 1 | K21.03185 | 947 260 0945 | | 2 | AĞIR SERİ FRENLEME (Mo) | SYNCHRONIZING CONE / Mo |
| 2 | K21.03079 | 389 262 4935 | (389 262 2035) | 1 | A.SERİ YILDIZ DİŞLİ 73 DİŞ | SYNCHRONIZER HUB 73 T. |
| 3 | K21.03033 | 945 262 6923 | (930 262 0623) | 1 | AĞIR SERİ HALKA | ENGAGING SLEEVE |
| 4 | K21.03431 | 960 265 0049 | (947 265 0349) | 2 | A.SERİ HİLAL PABUCU | SLIDING PAD |

SYNCHRONIZER KIT PLANETARY
OLD MODEL

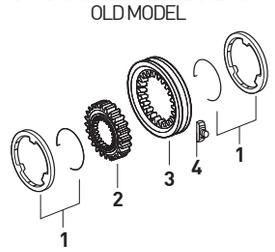


| Fig. | Kacmaz No. | Oem No | Oem Old No | Pcs. | Ürün Tanımı | Description |
|---|---|---|---|---|---|---|
| | K21.06194 | | | Kit | AĞIR SERİ.SENK.KİT | SYNCH.KIT PLANETARY |
| 1 | K21.03017 | 389 262 0537 | (389 262 0037) | 2 | AĞIR SERİ FRENLEME (Mo) | SYNCHRONIZING CONE / Mo |
| 2 | K21.03079 | 389 262 4935 | (389 262 2035) | 1 | A.SERİ YILDIZ DİŞLİ 73 DİŞ | SYNCHRONIZER HUB 73 T. |
| 3 | K21.03028 | 945 262 6623 | (945 262 0823) | 1 | AĞIR SERİ HALKA 73 DİŞ | ENGAGING SLEEVE 73 T. |
| | | | (389 262 1623) | | | |
| 4 | K21.03406 | 389 265 2449 | (389 265 1249) | 2 | A.SERİ HİLAL PABUCU | SLIDING PAD |



**Original parts names, oem numbers, symbols and descriptions used in this catalogue are for reference purposes only.**

| Fig. | Kacmaz No. | Oem No | Oem Old No | Pcs. | Ürün Tanımı | Description |
|---|---|---|---|---|---|---|
| | K21.06217 | | | Kit | AĞIR SERİ SENK.KİT | SYNCH.KIT PLANETARY |
| 1 | K21.03018 | 389 260 2036 | | 1 | TABLA SENKROMENÇ | FOLLOWER RING |
| 2 | K21.03017 | 389 262 0537 | (389 262 0037) | 2 | AĞIR SERİ FRENLEME (Mo) | SYNCHRONIZING CONE / Mo |
| 3 | K21.03079 | 389 262 4935 | (389 262 2035) | 1 | A.SERİ YILDIZ DİŞLİ 73 DİŞ | SYNCHRONIZER HUB 73 T. |
| 4 | K21.03028 | 945 262 6623 | (945 262 0823) | 1 | AĞIR SERİ HALKA 73 DİŞ | ENGAGING SLEEVE 73 T. |
| | | | (389 262 1623) | | | |
| 5 | K21.03406 | 389 265 2449 | (389 265 1249) | 2 | A.SERİ HİLAL PABUCU | SLIDING PAD |
| 6 | K21.03187 | 389 262 9234 | (945 262 1234) | 1 | SERİ SENKROMENÇ | ENGAGING RING |

SYNCHRONIZER KIT PLANETARY
OLD MODEL

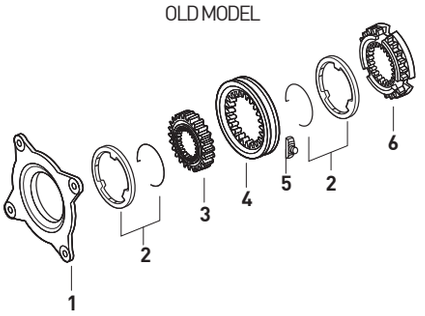


| Fig. | Kacmaz No. | Oem No | Oem Old No | Pcs. | Ürün Tanımı | Description |
|---|---|---|---|---|---|---|
| | K21.07026 | | | Kit | AĞIR SERİ SENK.KİT | SYNCH.KIT PLANETARY |
| 1 | K21.03018 | 389 260 2036 | | 1 | TABLA SENKROMENÇ | FOLLOWER RING |
| 2 | K21.03017 | 389 262 0537 | (389 262 0037) | 2 | AĞIR SERİ FRENLEME (Mo) | SYNCHRONIZING CONE / Mo |
| 3 | K21.03079 | 389 262 4935 | (389 262 2035) | 1 | A.SERİ YILDIZ DİŞLİ 73 DİŞ | SYNCHRONIZER HUB 73 T. |
| 4 | K21.03028 | 945 262 6623 | (945 262 2623) | 1 | AĞIR SERİ HALKA 73 DİŞ | ENGAGING SLEEVE 73 T. |
| 5 | K21.03406 | 389 265 2449 | (389 265 1249) | 2 | A.SERİ HİLAL PABUCU | SLIDING PAD |
| 6 | K21.06059 | 945 264 0420 | (945 264 0220) | 1 | RETARDER DİŞLİSİ | RETARDER GEAR |

SYNCHRONIZER KIT PLANETARY
OLD MODEL

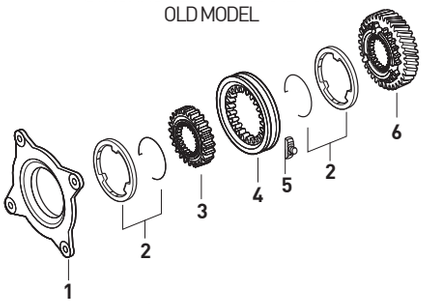


| Fig. | Kacmaz No. | Oem No | Oem Old No | Pcs. | Ürün Tanımı | Description |
|---|---|---|---|---|---|---|
| 1 | K21.06185 | 945 264 0305 | | 1 | PTO MİLİ | INTERM.SHAFT |
| 1 | K21.03496 | 945 264 0805 | (945 264 0505) | 1 | PTO MİLİ | INTERM.SHAFT |
| 1 | K21.03493 | 389 264 0205 | (387 264 0405) | 1 | PTO MİLİ | INTERM.SHAFT |
| 1 | K21.03494 | 387 264 0505 | | 1 | PTO MİLİ | INTERM.SHAFT |
| 2 | | 013 981 0610 | (013 981 0510) | 1 | PTO MİLİ MASURA BİLYA | NEEDLE CAGE |
| 3 | K21.03613 | 004 981 9225 | (004 981 8625) | 1 | PTO MİL BİLYASI | ROLLER BEARING |
| 4 | K21.06964 | 000471 045000 | (003 994 3741) | 1 | PTO MİL SEKMANI | RETAINING RING |
| 5 | | 945 264 0687 | (389 264 0587) | 1 | PTO MİL HALKASI | RING |
| 6 | | 389 264 0223 | | 1 | PTO MİL KOVANI | SLIDING COLLAR |
| 7 | | 000472 080000 | | 1 | PTO SEKMANI | RETAINING RING |
| 8 | | 900055 035301 | | 1 | PTO SEKMANI | RETAINING RING |
| 9 | | 006 981 2525 | (008 981 4125) | 1 | PTO KAPAK BİLYASI | ROLLER BEARING |
| 10 | | 389 264 0780 | (602 264 0280) | 1 | PTO KAPAK CONTASI | GASKET |
| 11 | | 945 264 0611 | | 1 | PTO BAĞ.KAPAĞI | COVER |
| 11 | | 389 264 0311 | | 1 | PTO BAĞ.KAPAĞI | COVER |

P.T.O. (POWER TAKE OFF)

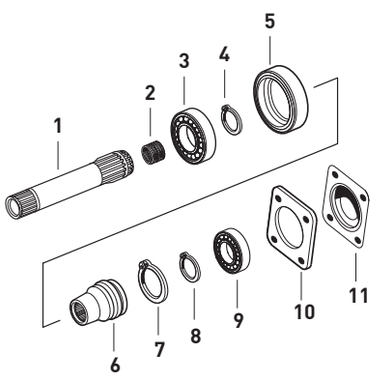


| Fig. | Kacmaz No. | Oem No | Oem Old No | Pcs. | Ürün Tanımı | Description |
|---|---|---|---|---|---|---|
| 1 | K21.03085 | 947 264 0005 | (389 269 0310) | 1 | YAĞ POMPA MİLİ | OIL PUMP SHAFT |
| 1 | K21.03670 | 947 264 0105 | | 1 | YAĞ POMPA MİLİ (RETARDER) | OIL PUMP SHAFT |
| 2 | K21.03511 | 029 997 5748 | | 1 | YAĞ POMPA KAPAK ORİNGİ | O-RING |
| 3 | K21.03558 | 947 264 0287 | | 1 | YAĞ POMPA KAPAĞI | OIL PUMP COVER |
| 4 | K21.03613 | 004 981 9225 | (004 981 8625) | 1 | PTO MİL BİLYASI | ROLLER BEARING |
| 5 | K21.06964 | 000471 045000 | (003 994 3741) | 1 | PTO MİL BİLYA SEKMANI | RETAINING RING |
| 6 | K21.06998 | 017 981 1705 | | 1 | PTO BORU DİŞLİ BİLYASI | ROLLER BEARING |
| 7 | | 947 260 4708 | | 1 | PTO BORU DİŞLİ | GEAR |
| 8 | | 017 981 1805 | | 2 | PTO BORU DİŞLİ BİLYASI | ROLLER BEARING |
| 9 | K21.04334 | 945 264 0006 | | 1 | PTO ARA ADAPTÖR MİLİ | INTERM.SHAFT |
| 10 | | 387 264 3652 | | 2 | BİLYA AYAR RAYNELİ | THRUST WASHER |
| 10 | | 387 264 3752 | | 2 | BİLYA AYAR RAYNELİ | THRUST WASHER |
| 10 | | 387 264 3852 | | 2 | BİLYA AYAR RAYNELİ | THRUST WASHER |
| 11 | | 000988 022010 | | 2 | BİLYA AYAR PULU | THRUST WASHER |
| 12 | K21.04333 | 385 993 5201 | | 1 | YAY | SPRING |
| 13 | | 912009 022100 | | 1 | BİLYA AYAR PUL SEKMANI | RETAINING RING |
| 14 | K21.04332 | 000625 000629 | | 1 | PTO MIL ŞAPKASI | PTO SHAFT CAP |
| 15 | | 016 981 6705 | | 1 | PTO BORU DİŞLİ BİLYASI | ROLLER BEARING |
| 16 | | 947 264 0621 | (947 264 0521) | 1 | PTO BORU DİŞLİ | GEAR |
| 17 | K21.04362 | | | kit | ARA ADAPTÖR MİLİ KOMPLE | INTERM.SHAFT COMP. |
| 18 | K21.06346 | 970 260 0457 | | kit | P.T.O VENTİLİ | VALVE |

P.T.O. (POWER TAKE OFF)

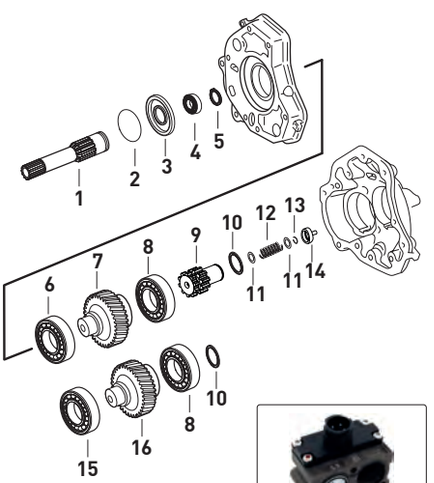


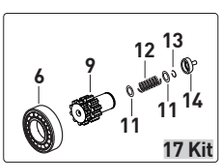

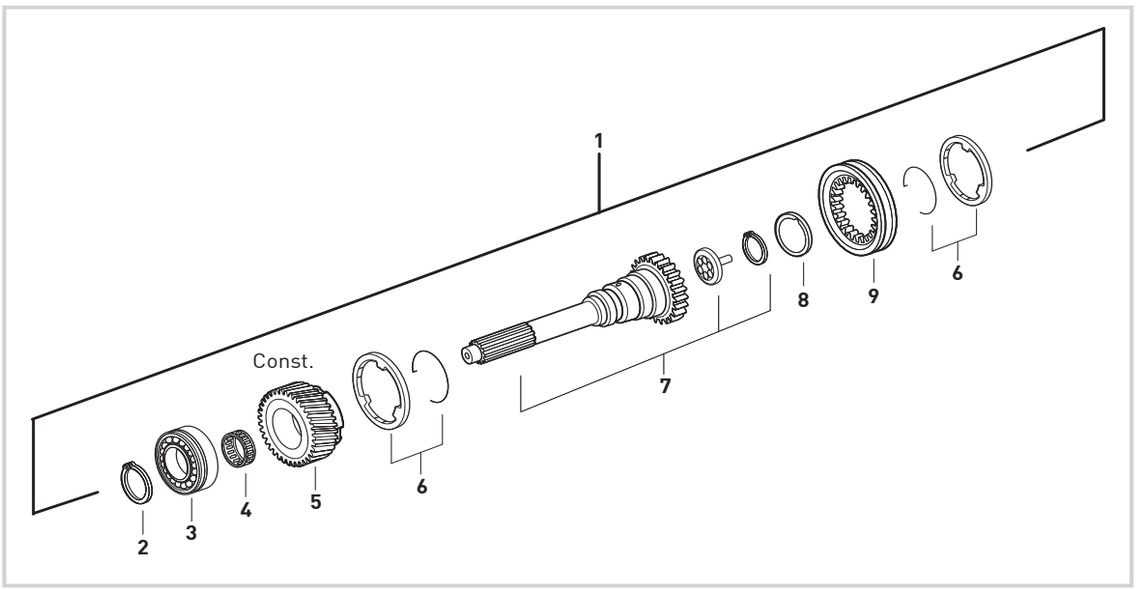


## NEW TYPE

| Fig. | Kacmaz No. | Oem No | Oem Old No | Pcs. | Ürün Tanımı | Description | Sizes |
|---|---|---|---|---|---|---|---|
| 1 | K21.03545 | 945 260 7892 | | Kit | PRİZDİREK KOMPLE | INPUT SHAFT COMPLETE | |
| 2 | K21.04346 | 387 262 8773 | | 1 | PRİZDİREK ÖN BİLYA SEKMANI | RETAINING RING | 3,20mm |
| 3 | K21.03618 | 011 981 1305 | (014 981 9005) | 1 | PRİZDİREK ÖN BİLYA | ROLLER BEARING | 75X140X34,25mm |
| 4 | K21.03815 | 016 981 0010 | (018 981 8710) | 1 | TAKVİYE DİŞLİ MASURA BİLYA | NEEDLE CAGE | 89X97X40mm |
| 5 | K21.03130 | 945 262 9817 | (945 262 5417) | 1 | TAKVİYE DİŞLİSİ 32 DİŞ | CONSTANT GEAR 32 T. | |
| | | | (945 262 7517) | | | | |
| 6 | K21.03136 | 945 260 2245 | (946 262 6337) | 2 | TAKVİYE FRENLEME (Mo) | SYNCHRONIZING CONE / Mo | |
| 7 | K21.03047 | 389 262 8301 | (945 262 0303) | 1 | PRİZDİREK 60 DİŞ | INPUT SHAFT 60 T. | |
| | | | (389 262 6301) | | | | |
| 8 | K21.03510 | 001 262 0362 | (000 262 8762) | 1 | PRİZDİREK ARKA KEÇE | OIL SEAL | 78,5X105X7mm |
| 9 | K21.03137 | 945 262 6823 | (945 262 6423) | 1 | TAKVİYE HALKA | ENGAGING SLEEVE | |

## OLD TYPE

| Fig. | Kacmaz No. | Oem No | Oem Old No | Pcs. | Ürün Tanımı | Description | Sizes |
|---|---|---|---|---|---|---|---|
| 1 | K21.03556 | 945 260 7692 | | Kit | PRİZDİREK KOMPLE | INPUT SHAFT COMPLETE | |
| 2 | K21.04346 | 387 262 8773 | | 1 | PRİZDİREK ÖN BİLYA SEKMANI | RETAINING RING | 3,20mm |
| 3 | K21.03618 | 011 981 1305 | (014 981 9005) | 1 | PRİZDİREK ÖN BİLYA | ROLLER BEARING | 75X140X34,25mm |
| 4 | K21.03815 | 016 981 0010 | (018 981 8710) | 1 | TAKVİYE DİŞLİ MASURA BİLYA | NEEDLE CAGE | 89X97X40mm |
| 5 | K21.03030 | 945 262 4110 | (945 262 1610) | 1 | TAKVİYE DİŞLİSİ 32 DİŞ | CONSTANT GEAR 32 T. | |
| | | | (945 262 0010) | | | | |
| 6 | K21.03015 | 389 262 0637 | (387 262 0837) | 2 | TAKVİYE FRENLEME (Mo) | SYNCHRONIZING CONE / Mo | |
| 7 | K21.03047 | 389 262 8301 | (945 262 0303) | 1 | PRİZDİREK 60 DİŞ | INPUT SHAFT 60 T. | |
| | | | (389 262 6301) | | | | |
| 8 | K21.03510 | 001 262 0362 | (000 262 8762) | 1 | PRİZDİREK ARKA KEÇE | OIL SEAL | 78,5X105X7mm |
| 9 | K21.03002 | 945 262 2823 | (945 262 0323) | 1 | TAKVİYE HALKA | ENGAGING SLEEVE | |



**Original parts names, oem numbers, symbols and descriptions used in this catalogue are for reference purposes only.**

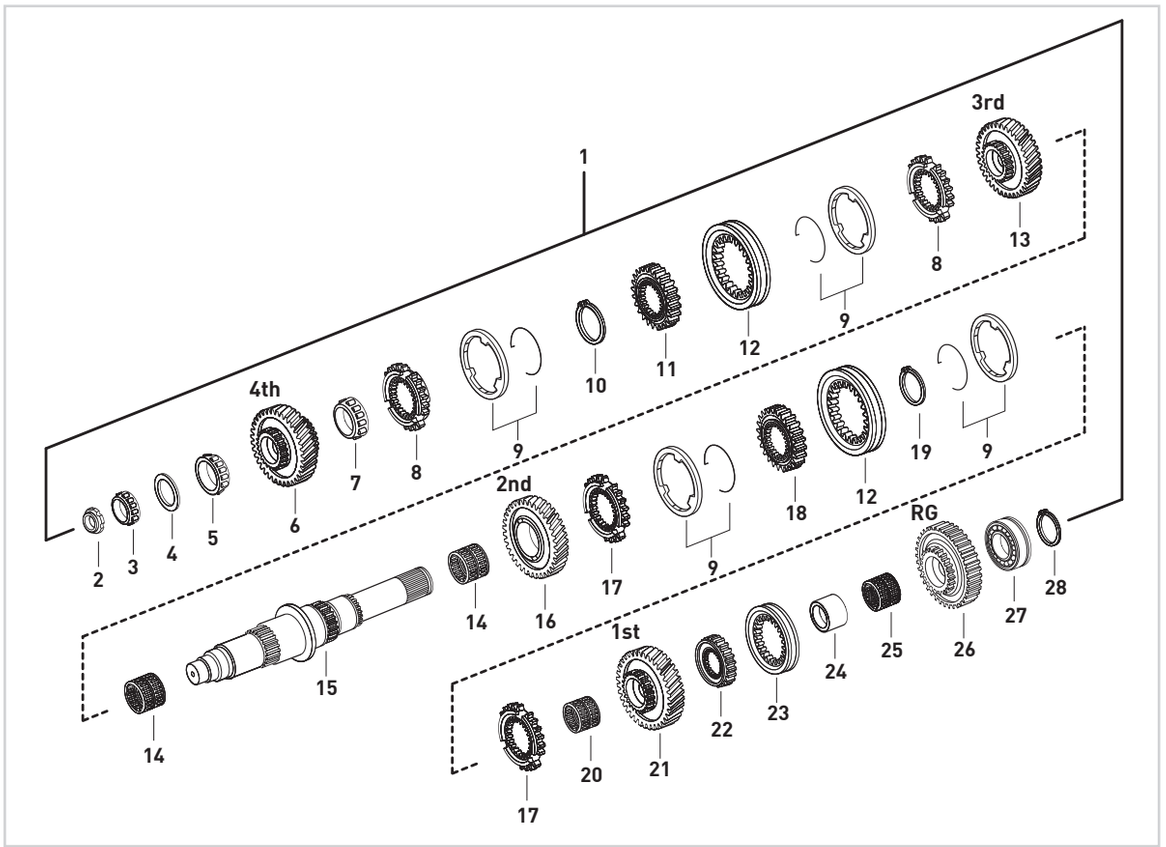


| Fig. | Kacmaz No. | Oem No | Oem Old No | Pcs. | Ürün Tanımı | Description | Sizes |
|---|---|---|---|---|---|---|---|
| 1 | K21.03564 | 947 260 7022 | | Kit | KAMALI MİL KOMPLE | MAIN SHAFT COMPLETE | |
| 2 | K21.03432 | 945 990 0250 | (945 990 0150) | 1 | KAMALI MİL SOMUNU | NUT | M30X1,5 |
| 3 | K21.03619 | 015 981 1605 | (013 981 1105) | 1 | KAMALI MİL UÇ BİLYA | ROLLER BEARING | 39,69X40,39mm |
| 4 | K21.04097 | 389 262 1955 | | 1 | 4.VİT.ÖNBİLYA AYAR PULU | THRUST WASHER | 1,64mm |
| 5 | K21.03620 | 017 981 5105 | (015 981 6105) | 1 | 4.VİTES DİŞLİSİ ÖN BİLYA | ROLLER BEARING | 50X41,3mm |
| 6 | K21.03221 | 389 262 7910 | (945 262 2810) | 1 | 4.VİTES DİŞLİSİ 36 DİŞ | GEAR 4th 36 T. | |
| 7 | K21.03622 | 015 981 6205 | (015 981 8105) | 1 | 4.VİTES DİŞLİSİ ARKA BİLYA | ROLLER BEARING | 55X29,8mm |
| 8 | K21.03027 | 945 262 0534 | (389 262 5034) | 2 | 3./4.VİTES SENKROMENÇ | ENGAGING RING | |
| 9 | K21.03016 | 389 262 0737 | (387 262 0937) | 4 | 1./2./3./4.VİTES FRENLEME (Mo) | SYNCHRONIZING CONE / Mo | |
| 10 | K21.04344 | 387 262 7973 | | 1 | 3./4.VİT.SENK.YIL.DİŞLİ EMN.SEK. | RETAINING RING | 2,70mm |
| 11 | K21.03149 | 389 262 4735 | (389 262 4635) | 1 | 3./4.VİTES YILDIZ DİŞLİ | SYNCHRONIZER HUB | |
| 12 | K21.03009 | 945 262 2723 | (945 262 0423) | 2 | 1./2./3./4.VİTES HALKA | ENGAGING SLEEVE | |
| 13 | K21.03223 | 389 262 3713 | (945 262 3913) | 1 | 3.VİTES DİŞLİSİ 29 DİŞ | GEAR 3rd 29 T. | |
| 14 | K21.03810 | 018 981 6610 | (010 981 5310) | 2 | 2./4.VİTES MASURA BİLYA | NEEDLE CAGE | 85X93X53mm |
| 15 | K21.03156 | 945 262 4505 | | 1 | KAMALI MİL | MAIN SHAFT | |
| 16 | K21.03158 | 389 262 2812 | (389 262 2512) | 1 | 2.VİTES DİŞLİSİ 39 DİŞ | GEAR 2nd 39 T. | |
| 17 | K21.03025 | 945 262 0434 | (389 262 0034) | 2 | 1./2.VİTES SENKROMENÇ | ENGAGING RING | |
| 18 | K21.03161 | 389 262 2535 | (945 262 0135) | 1 | 1./2.VİTES YILDIZ DİŞLİ | SYNCHRONIZER HUB | |
| 19 | K21.04342 | 007 994 0041 | (387 262 2273) | 1 | 1./2.VİT.SENK.YIL.DİŞLİ EMN.SEK | RETAINING RING | 2,50mm |
| 20 | K21.03839 | 945 981 0010 | (018 981 8110) | 1 | 1.VİTES MASURA BİLYA | NEEDLE CAGE | 75X83X48mm |
| 21 | K21.03162 | 946 262 0811 | (389 262 2711) | 1 | 1.VİTES DİŞLİSİ 44 DİŞ | GEAR 1st 44 T. | |
| 22 | K21.03059 | 389 262 0135 | | 1 | GERİ VİTES YILDIZ DİŞLİ | SYNCHRONIZER HUB | |
| 23 | K21.03060 | 389 262 1723 | (389 262 0023) | 1 | GERİ VİTES HALKASI | ENGAGING SLEEVE | |
| 24 | K21.03112 | 389 262 2550 | (389 262 1650) | 1 | GERİ VİTES MASURA BİLYA ÇANAĞI | BEARING RACE | |
| 25 | K21.03803 | 009 981 1510 | (017 981 7810) | 1 | GERİ VİTES MASURA BİLYA | NEEDLE CAGE | 78X86X35mm |
| 26 | K21.03165 | 945 262 3233 | (389 262 2033) | 1 | GERİ VİTES DİŞLİSİ 40 DİŞ | REVERSE GEAR 40 T. | |
| 27 | K21.03623 | 014 981 6105 | (016 981 1305) | 1 | KAMALI MİL ARKA BİLYA | ROLLER BEARING | 60X130X33,2mm |
| 28 | K21.04331 | 007 994 1841 | (006 994 9941) | 1 | KAMALI MİL ARKA BİLYA SEKMANI | RETAINING RING | 2,50mm |



Original parts names, oem numbers, symbols and descriptions used in this catalogue are for reference purposes only.

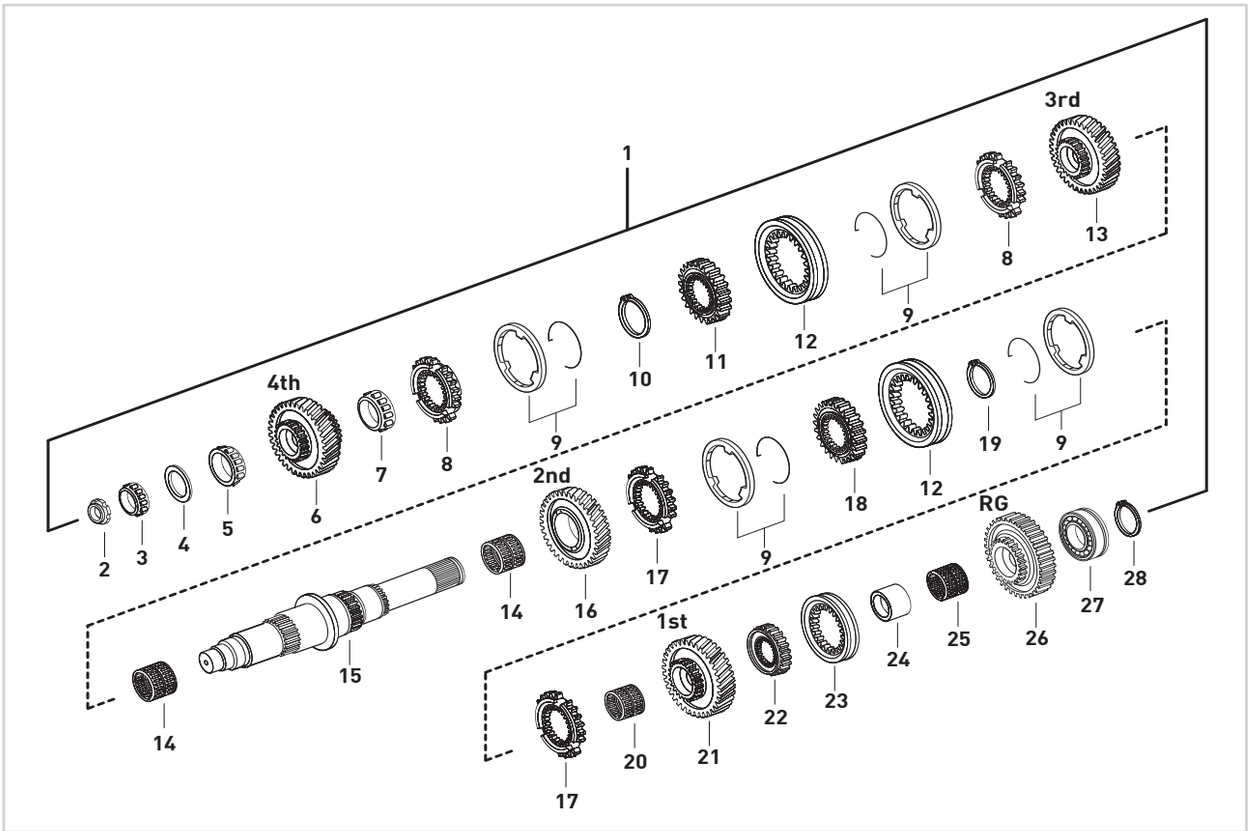


| Fig. | Kacmaz No. | Oem No | Oem Old No | Pcs. | Ürün Tanımı | Description | Sizes |
|---|---|---|---|---|---|---|---|
| 1 | K21.03550 | | | Kit | KAMALI MİL KOMPLE | MAIN SHAFT COMPLETE | |
| 2 | K21.03432 | 945 990 0250 | (945 990 0150) | 1 | KAMALI MİL SOMUNU | NUT | M30X1,5 |
| 3 | K21.03619 | 015 981 1605 | (013 981 1105) | 1 | KAMALI MİL UÇ BİLYA | ROLLER BEARING | 39,69X40,39mm |
| 4 | K21.04097 | 389 262 1955 | | 1 | 4.VİT.ÖNBİLYA AYAR PULU | THRUST WASHER | 1,64mm |
| 5 | K21.03620 | 017 981 5105 | (015 981 6105) | 1 | 4.VİTES DİŞLİSİ ÖN BİLYA | ROLLER BEARING | 50X41,3mm |
| 6 | K21.03220 | 945 262 9517 | (945 262 5617) | 1 | 4.VİTES DİŞLİSİ 36 DİŞ | GEAR 4th 36 T. | |
| 7 | K21.03622 | 015 981 6205 | (015 981 8105) | 1 | 4.VİTES DİŞLİSİ ARKA BİLYA | ROLLER BEARING | 55X29,8mm |
| 8 | K21.03146 | 945 262 8234 | (945 262 5434) | 2 | 3./4.VİTES SENKROMENÇ | ENGAGING RING | |
| 9 | K21.03148 | 947 260 1945 | (947 260 4645) | 4 | 1./2./3./4.VİTES FRENLEME (Mo) | SYNCHRONIZING CONE / Mo | |
| 10 | K21.04344 | 387 262 7973 | | 1 | 3./4.VİT.SENK.YIL.DİŞLİ EMN.SEK. | RETAINING RING | 2,70mm |
| 11 | K21.03149 | 389 262 4735 | (389 262 4635) | 1 | 3./4.VİTES YILDIZ DİŞLİ | SYNCHRONIZER HUB | |
| 12 | K21.03151 | 945 262 6523 | (930 262 0523) | 2 | 1./2./3./4.VİTES HALKA | ENGAGING SLEEVE | |
| 13 | K21.03223 | 389 262 3713 | (945 262 3913) | 1 | 3.VİTES DİŞLİSİ 29 DİŞ | GEAR 3rd 29 T. | |
| 14 | K21.03810 | 018 981 6610 | (010 981 5310) | 2 | 2./4.VİTES MASURA BİLYA | NEEDLE CAGE | 85X93X53mm |
| 15 | K21.03156 | 945 262 4505 | | 1 | KAMALI MİL | MAIN SHAFT | |
| 16 | K21.03158 | 389 262 2812 | (389 262 2512) | 1 | 2.VİTES DİŞLİSİ 39 DİŞ | GEAR 2nd 39 T. | |
| 17 | K21.03160 | 945 262 5534 | | 2 | 1./2.VİTES SENKROMENÇ | ENGAGING RING | |
| 18 | K21.03161 | 389 262 2535 | (945 262 0135) | 1 | 1./2.VİTES YILDIZ DİŞLİ | SYNCHRONIZER HUB | |
| 19 | K21.04342 | 007 994 0041 | (387 262 2273) | 1 | 1./2.VİT.SENK.YIL.DİŞLİ EMN.SEK | RETAINING RING | 2,50mm |
| 20 | K21.03839 | 945 981 0010 | (018 981 8110) | 1 | 1.VİTES MASURA BİLYA | NEEDLE CAGE | 75X83X48mm |
| 21 | K21.03162 | 946 262 0811 | (389 262 2711) | 1 | 1.VİTES DİŞLİSİ 44 DİŞ | GEAR 1st 44 T. | |
| 22 | K21.03059 | 389 262 0135 | | 1 | GERİ VİTES YILDIZ DİŞLİ | SYNCHRONIZER HUB | |
| 23 | K21.03060 | 389 262 1723 | (389 262 0023) | 1 | GERİ VİTES HALKASI | ENGAGING SLEEVE | |
| 24 | K21.03112 | 389 262 2550 | (389 262 1650) | 1 | GERİ VİTES MASURA BİLYA ÇANAĞI | BEARING RACE | |
| 25 | K21.03803 | 009 981 1510 | (017 981 7810) | 1 | GERİ VİTES MASURA BİLYA | NEEDLE CAGE | 78X86X35mm |
| 26 | K21.03165 | 945 262 3233 | (389 262 2033) | 1 | GERİ VİTES DİŞLİSİ 40 DİŞ | REVERSE GEAR 40 T. | |
| 27 | K21.03623 | 014 981 6105 | (016 981 1305) | 1 | KAMALI MİL ARKA BİLYA | ROLLER BEARING | 60X130X33,2mm |
| 28 | K21.04331 | 007 994 1841 | (006 994 9941) | 1 | KAMALI MİL ARKA BİLYA SEKMANI | RETAINING RING | 2,50mm |



**Original parts names, oem numbers, symbols and descriptions used in this catalogue are for reference purposes only.**

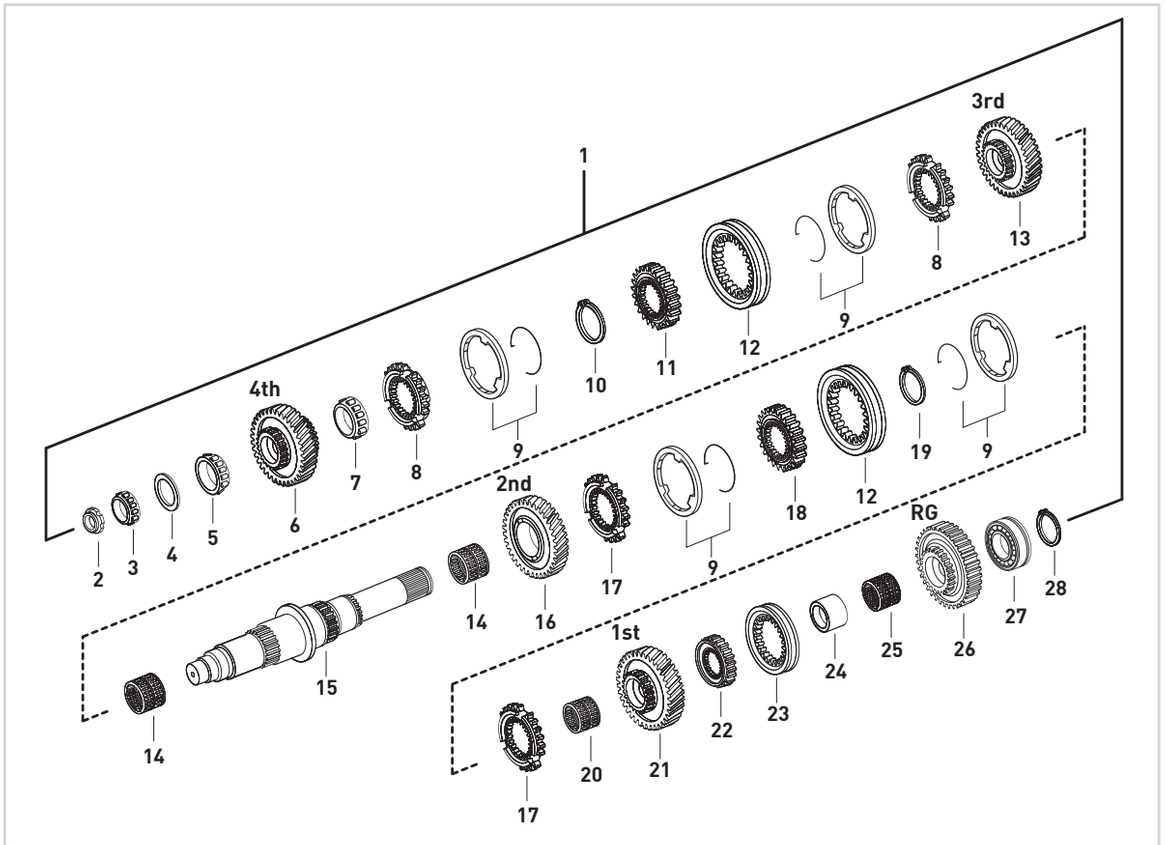


| Fig. | Kacmaz No. | Oem No | Oem Old No | Pcs. | Ürün Tanımı | Description | Sizes |
|---|---|---|---|---|---|---|---|
| 1 | K21.06380 | | | Kit | KAMALI MİL KOMPLE | MAIN SHAFT COMPLETE | |
| 2 | K21.03432 | 945 990 0250 | (945 990 0150) | 1 | KAMALI MİL SOMUNU | NUT | M30X1,5 |
| 3 | K21.03619 | 015 981 1605 | (013 981 1105) | 1 | KAMALI MİL UÇ BİLYA | ROLLER BEARING | 39,69X40,39mm |
| 4 | K21.04097 | 389 262 1955 | | 1 | 4.VİT.ÖNBİLYA AYAR PULU | THRUST WASHER | 1,64mm |
| 5 | K21.03620 | 017 981 5105 | (015 981 6105) | 1 | 4.VİTES DİŞLİSİ ÖN BİLYA | ROLLER BEARING | 50X41,3mm |
| 6 | K21.03220 | 945 262 9517 | (945 262 5617) | 1 | 4.VİTES DİŞLİSİ 36 DİŞ | GEAR 4th 36 T. | |
| 7 | K21.03622 | 015 981 6205 | (015 981 8105) | 1 | 4.VİTES DİŞLİSİ ARKA BİLYA | ROLLER BEARING | 55,0X29,8mm |
| 8 | K21.03146 | 945 262 8234 | (945 262 5434) | 2 | 3./4.VİTES SENKROMENÇ | ENGAGING RING | |
| 9 | K21.03148 | 947 260 1945 | (947 260 4645) | 4 | 1./2./3./4.VİTES FRENLEME (Mo) | SYNCHRONIZING CONE / Mo | |
| 10 | K21.04344 | 387 262 7973 | | 1 | 3./4.VİT.SENK.YIL.DİŞLİ EMN.SEK. | RETAINING RING | 2,70mm |
| 11 | K21.03149 | 389 262 4735 | (389 262 4635) | 1 | 3./4.VİTES YILDIZ DİŞLİ | SYNCHRONIZER HUB | |
| 12 | K21.03151 | 945 262 6523 | (930 262 0523) | 2 | 1./2./3./4.VİTES HALKA | ENGAGING SLEEVE | |
| 13 | K21.03223 | 389 262 3713 | (945 262 3913) | 1 | 3.VİTES DİŞLİSİ 29 DİŞ | GEAR 3rd 29 T. | |
| 14 | K21.03810 | 018 981 6610 | (010 981 5310) | 2 | 2./4.VİTES MASURA BİLYA | NEEDLE CAGE | 85X93X53mm |
| 15 | K21.06042 | 930 262 1205 | (930 262 2405) | 1 | KAMALI MİL | MAIN SHAFT | |
| 16 | K21.03158 | 389 262 2812 | (389 262 2512) | 1 | 2.VİTES DİŞLİSİ 39 DİŞ | GEAR 2nd 39 T. | |
| 17 | K21.03160 | 945 262 5534 | | 2 | 1./2.VİTES SENKROMENÇ | ENGAGING RING | |
| 18 | K21.03161 | 389 262 2535 | (945 262 0135) | 1 | 1./2.VİTES YILDIZ DİŞLİ | SYNCHRONIZER HUB | |
| 19 | K21.04342 | 007 994 0041 | (387 262 2273) | 1 | 1./2.VİT.SENK.YIL.DİŞLİ EMN.SEK | RETAINING RING | 2,50mm |
| 20 | K21.03839 | 945 981 0010 | (018 981 8110) | 1 | 1.VİTES MASURA BİLYA | NEEDLE CAGE | 75X83X48mm |
| 21 | K21.03162 | 946 262 0811 | (389 262 2711) | 1 | 1.VİTES DİŞLİSİ 44 DİŞ | GEAR 1st 44 T. | |
| 22 | K21.03059 | 389 262 0135 | | 1 | GERİ VİTES YILDIZ DİŞLİ | SYNCHRONIZER HUB | |
| 23 | K21.03060 | 389 262 1723 | (389 262 0023) | 1 | GERİ VİTES HALKASI | ENGAGING SLEEVE | |
| 24 | K21.03065 | 389 262 0150 | | 1 | GERİ VİTES MASURA BİLYA ÇANAĞI | BEARING RACE | |
| 25 | K21.03813 | 013 981 1810 | (013 981 2610) | 1 | GERİ VİTES MASURA BİLYA | NEEDLE CAGE | 78X86X33mm |
| 26 | K21.06045 | 930 262 0233 | | 1 | GERİ VİTES DİŞLİSİ 40 DİŞ | REVERSE GEAR 40 T. | |
| 27 | K21.03661 | 002 981 8181 | | 1 | KAMALI MİL ARKA BİLYA | ROLLER BEARING | 60X130X35,2mm |
| 28 | K21.04331 | 007 994 1841 | (006 994 9941) | 1 | KAMALI MİL ARKA BİLYA SEKMANI | RETAINING RING | 2,50mm |



Original parts names, oem numbers, symbols and descriptions used in this catalogue are for reference purposes only.

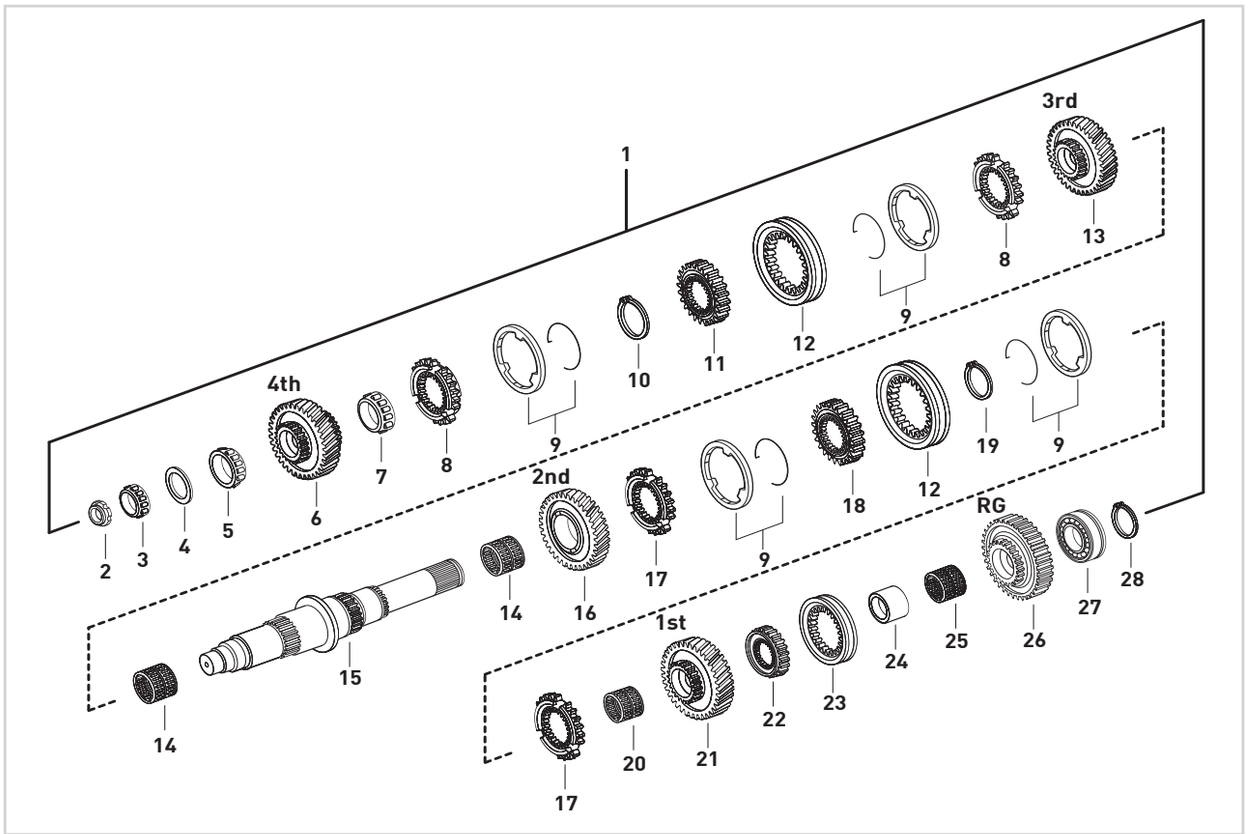


| Fig. | Kacmaz No. | Oem No | Oem Old No | Pcs. | Ürün Tanımı | Description | Sizes |
|---|---|---|---|---|---|---|---|
| 1 | K21.03563 | 947 260 6922 | | Kit | KAMALI MİL KOMPLE | MAIN SHAFT COMPLETE | |
| 2 | K21.03432 | 945 990 0250 | (945 990 0150) | 1 | KAMALI MİL SOMUNU | NUT | M30X1,5 |
| 3 | K21.03619 | 015 981 1605 | (013 981 1105) | 1 | KAMALI MİL UÇ BİLYA | ROLLER BEARING | 39,69X40,39mm |
| 4 | K21.04097 | 389 262 1955 | | 1 | 4.VİT.ÖN BİLYA AYAR PULU | THRUST WASHER | 1,64mm |
| 5 | K21.03620 | 017 981 5105 | (015 981 6105) | 1 | 4.VİTES DİŞLİSİ ÖN BİLYA | ROLLER BEARING | 50X41,3mm |
| 6 | K21.03221 | 389 262 7910 | (945 262 2810) | 1 | 4.VİTES DİŞLİSİ 36 DİŞ | GEAR 4th 36 T. | |
| 7 | K21.03622 | 015 981 6205 | (015 981 8105) | 1 | 4.VİTES DİŞLİSİ ARKA BİLYA | ROLLER BEARING | 55X29,8mm |
| 8 | K21.03027 | 945 262 0534 | (389 262 5034) | 2 | 3./4.VİTES SENKROMENÇ | ENGAGING RING | |
| 9 | K21.03016 | 389 262 0737 | (387 262 0937) | 4 | 1./2./3./4.VİTES FRENLEME (Mo) | SYNCHRONIZING CONE / Mo | |
| 10 | K21.04344 | 387 262 7973 | | 1 | 3./4.VİT.SENK.YIL.DİŞLİ EMN.SEK. | RETAINING RING | 2,70mm |
| 11 | K21.03149 | 389 262 4735 | (389 262 4635) | 1 | 3./4.VİTES YILDIZ DİŞLİ | SYNCHRONIZER HUB | |
| 12 | K21.03009 | 945 262 2723 | (945 262 0423) | 2 | 1./2./3./4.VİTES HALKA | ENGAGING SLEEVE | |
| 13 | K21.03223 | 389 262 3713 | (945 262 3913) | 1 | 3.VİTES DİŞLİSİ 39 DİŞ | GEAR 3rd 39 T. | |
| 14 | K21.03810 | 018 981 6610 | (010 981 5310) | 2 | 2./4.VİTES MASURA BİLYA | NEEDLE CAGE | 85X93X53mm |
| 15 | K21.03156 | 945 262 4505 | | 1 | KAMALI MİL | MAIN SHAFT | |
| 16 | K21.03158 | 389 262 2812 | (389 262 2512) | 1 | 2.VİTES DİŞLİSİ 29 DİŞ | GEAR 2nd 29 T. | |
| 17 | K21.03025 | 945 262 0434 | (389 262 0034) | 2 | 1./2.VİTES SENKROMENÇ | ENGAGING RING | |
| 18 | K21.03161 | 389 262 2535 | (945 262 0135) | 1 | 1./2.VİTES YILDIZ DİŞLİ | SYNCHRONIZER HUB | |
| 19 | K21.04342 | 007 994 0041 | (387 262 2273) | 1 | 1./2.VİT.SENK.YIL.DİŞLİ EMN.SEK | RETAINING RING | 2,50mm |
| 20 | K21.03839 | 945 981 0010 | (018 981 8110) | 1 | 1.VİTES MASURA BİLYA | NEEDLE CAGE | 75X83X48mm |
| 21 | K21.03162 | 946 262 0811 | (389 262 2711) | 1 | 1.VİTES DİŞLİSİ 44 DİŞ | GEAR 1st 44 T. | |
| 22 | K21.03164 | 389 262 3935 | | 1 | GERİ VİTES YILDIZ DİŞLİ | SYNCHRONIZER HUB | |
| 23 | K21.03061 | 389 262 1823 | (389 262 0923) | 1 | GERİ VİTES HALKASI | ENGAGING SLEEVE | |
| 24 | K21.03112 | 389 262 2550 | (389 262 1650) | 1 | GERİ VİTES MASURA BİLYA ÇANAĞI | BEARING RACE | |
| 25 | K21.03803 | 009 981 1510 | (017 981 7810) | 1 | GERİ VİTES MASURA BİLYA | NEEDLE CAGE | 75X86X35mm |
| 26 | K21.03168 | 945 262 3333 | (389 262 2133) | 1 | GERİ VİTES DİŞLİSİ 40 DİŞ | REVERSE GEAR 40 T. | |
| 27 | K21.03623 | 014 981 6105 | (016 981 1305) | 1 | KAMALI MİL ARKA BİLYA | ROLLER BEARING | 60X130X33,2mm |
| 28 | K21.04331 | 007 994 1841 | (006 994 9941) | 1 | KAMALI MİL ARKA BİLYA SEKMANI | RETAINING RING | 2,50mm |



**Original parts names, oem numbers, symbols and descriptions used in this catalogue are for reference purposes only.**

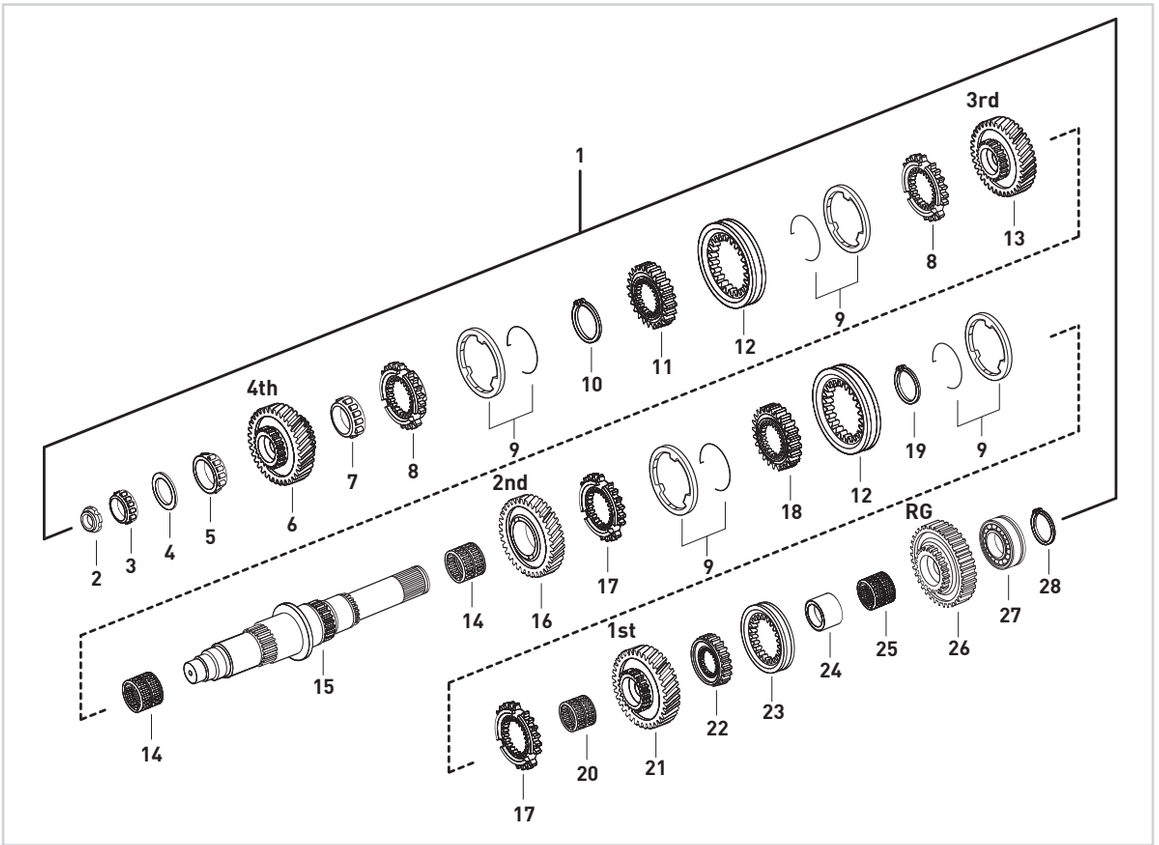


| Fig. | Kacmaz No. | Oem No | Oem Old No | Pcs. | Ürün Tanımı | Description | Sizes |
|---|---|---|---|---|---|---|---|
| 1 | K21.03562 | | | Kit | KAMALI MİL KOMPLE | MAIN SHAFT COMPLETE | |
| 2 | K21.03432 | 945 990 0250 | (945 990 0150) | 1 | KAMALI MİL SOMUNU | NUT | M30X1,5 |
| 3 | K21.03619 | 015 981 1605 | (013 981 1105) | 1 | KAMALI MİL UÇ BİLYA | ROLLER BEARING | 39,69X40,39mm |
| 4 | K21.04097 | 389 262 1955 | | 1 | 4.VİT.ÖN BİLYA AYAR PULU | THRUST WASHER | 1,64mm |
| 5 | K21.03620 | 017 981 5105 | (015 981 6105) | 1 | 4.VİTES DİŞLİSİ ÖN BİLYA | ROLLER BEARING | 50X41,3mm |
| 6 | K21.03220 | 945 262 9517 | (945 262 5617) | 1 | 4.VİTES DİŞLİSİ 36 DİŞ | GEAR 4th 36 T. | |
| 7 | K21.03622 | 015 981 6205 | (015 981 8105) | 1 | 4.VİTES DİŞLİSİ ARKA BİLYA | ROLLER BEARING | 55X29,8mm |
| 8 | K21.03146 | 945 262 8234 | (945 262 5434) | 2 | 3./4.VİTES SENKROMENÇ | ENGAGING RING | |
| 9 | K21.03148 | 947 260 1945 | (947 260 4645) | 4 | 1./2./3./4.VİTES FRENLEME (Mo) | SYNCHRONIZING CONE / Mo | |
| 10 | K21.04344 | 387 262 7973 | | 1 | 3./4.VİT.SENK.YIL.DİŞLİ EMN.SEK. | RETAINING RING | 2,70mm |
| 11 | K21.03149 | 389 262 4735 | (389 262 4635) | 1 | 3./4.VİTES YILDIZ DİŞLİ | SYNCHRONIZER HUB | |
| 12 | K21.03151 | 945 262 6523 | (930 262 0523) | 2 | 1./2./3./4.VİTES HALKA | ENGAGING SLEEVE | |
| 13 | K21.03223 | 389 262 3713 | (945 262 3913) | 1 | 3.VİTES DİŞLİSİ 29 DİŞ | GEAR 3rd 29 T. | |
| 14 | K21.03810 | 018 981 6610 | (010 981 5310) | 2 | 2./4.VİTES MASURA BİLYA | NEEDLE CAGE | 85X93X53mm |
| 15 | K21.03156 | 945 262 4505 | | 1 | KAMALI MİL | MAIN SHAFT | |
| 16 | K21.03158 | 389 262 2812 | (389 262 2512) | 1 | 2.VİTES DİŞLİSİ 29 DİŞ | GEAR 2nd 29 T. | |
| 17 | K21.03160 | 945 262 5534 | | 2 | 1./2.VİTES SENKROMENÇ | ENGAGING RING | |
| 18 | K21.03161 | 389 262 2535 | (945 262 0135) | 1 | 1./2.VİTES YILDIZ DİŞLİ | SYNCHRONIZER HUB | |
| 19 | K21.04342 | 007 994 0041 | (387 262 2273) | 1 | 1./2.VİT.SENK.YIL.DİŞLİ EMN.SEK | RETAINING RING | 2,50mm |
| 20 | K21.03839 | 945 981 0010 | (018 981 8110) | 1 | 1.VİTES MASURA BİLYA | NEEDLE CAGE | 75X83X48mm |
| 21 | K21.03162 | 946 262 0811 | (389 262 2711) | 1 | 1.VİTES DİŞLİSİ 44 DİŞ | GEAR 1st 44 T. | |
| 22 | K21.03164 | 389 262 3935 | | 1 | GERİ VİTES YILDIZ DİŞLİ | SYNCHRONIZER HUB | |
| 23 | K21.03061 | 389 262 1823 | (389 262 0923) | 1 | GERİ VİTES HALKASI | ENGAGING SLEEVE | |
| 24 | K21.03112 | 389 262 2550 | (389 262 1650) | 1 | GERİ VİTES MASURA BİLYA ÇANAĞI | BEARING RACE | |
| 25 | K21.03803 | 009 981 1510 | (017 981 7810) | 1 | GERİ VİTES MASURA BİLYA | NEEDLE CAGE | 75X86X35mm |
| 26 | K21.03168 | 945 262 3333 | (389 262 2133) | 1 | GERİ VİTES DİŞLİSİ 40 DİŞ | REVERSE GEAR 40 T. | |
| 27 | K21.03623 | 014 981 6105 | (016 981 1305) | 1 | KAMALI MİL ARKA BİLYA | ROLLER BEARING | 60X130X33,2mm |
| 28 | K21.04331 | 007 994 1841 | (006 994 9941) | 1 | KAMALI MİL ARKA BİLYA SEKMANI | RETAINING RING | 2,50mm |



Original parts names, oem numbers, symbols and descriptions used in this catalogue are for reference purposes only.

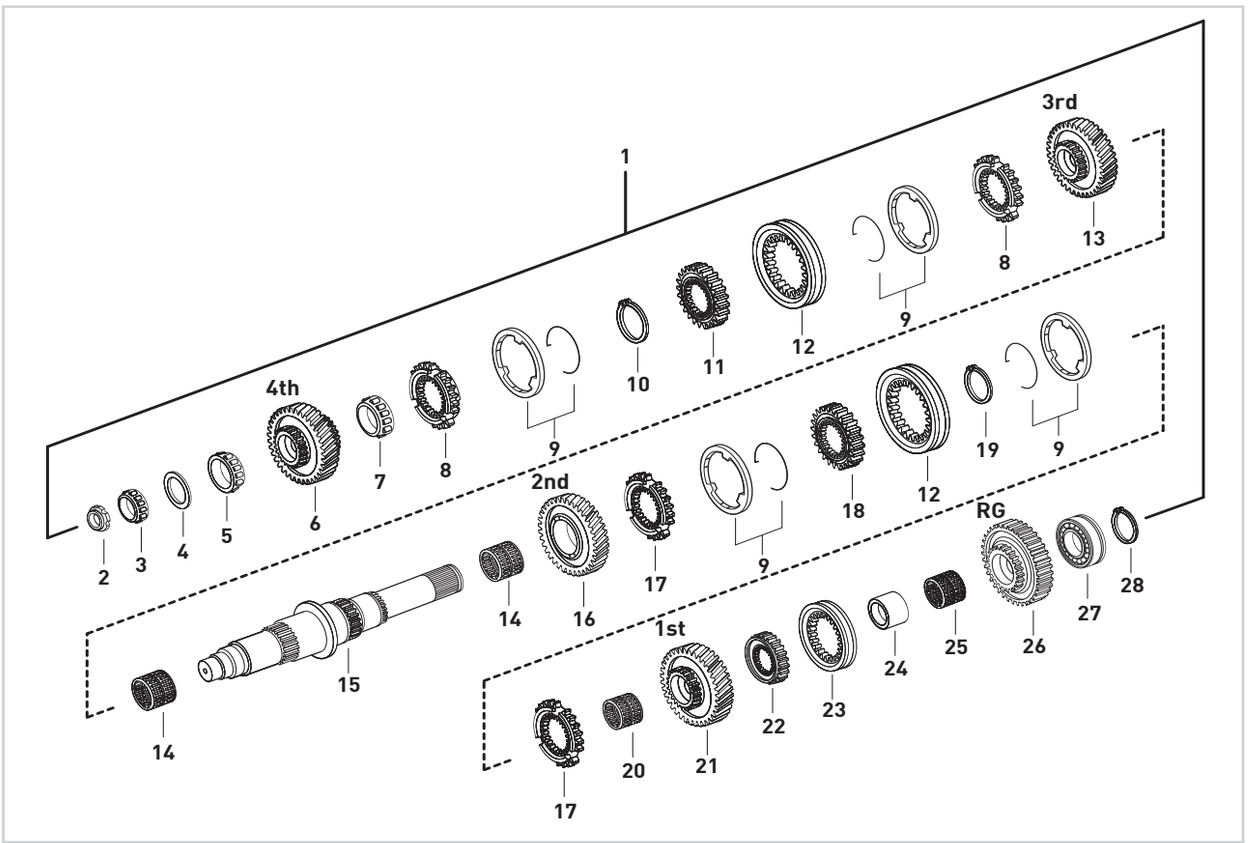


| Fig. | Kacmaz No. | Oem No | Oem Old No | Pcs. | Ürün Tanımı | Description | Sizes |
|---|---|---|---|---|---|---|---|
| 1 | K21.06468 | | | Kit | KAMALI MİL KOMPLE | MAIN SHAFT COMPLETE | |
| 2 | K21.03432 | 945 990 0250 | (945 990 0150) | 1 | KAMALI MİL SOMUNU | NUT | M30X1,5 |
| 3 | K21.03619 | 015 981 1605 | (013 981 1105) | 1 | KAMALI MİL UÇ BİLYA | ROLLER BEARING | 39,69X40,39mm |
| 4 | K21.04097 | 389 262 1955 | | 1 | 4.VİT.ÖNBİLYA AYAR PULU | THRUST WASHER | 1,64mm |
| 5 | K21.03620 | 017 981 5105 | (015 981 6105) | 1 | 4.VİTES DİŞLİSİ ÖN BİLYA | ROLLER BEARING | 50X41,3mm |
| 6 | K21.03220 | 945 262 9517 | (945 262 5617) | 1 | 4.VİTES DİŞLİSİ 36 DİŞ | GEAR 4th 36 T. | |
| 7 | K21.03622 | 015 981 6205 | (015 981 8105) | 1 | 4.VİTES DİŞLİSİ ARKA BİLYA | ROLLER BEARING | 55X29,8mm |
| 8 | K21.03146 | 945 262 8234 | (945 262 5434) | 2 | 3./4.VİTES SENKROMENÇ | ENGAGING RING | |
| 9 | K21.03148 | 947 260 1945 | (947 260 4645) | 4 | 1./2./3./4.VİTES FRENLEME (Mo) | SYNCHRONIZING CONE / Mo | |
| 10 | K21.04344 | 387 262 7973 | | 1 | 3./4.VİT.SENK.YIL.DİŞLİ EMN.SEK. | RETAINING RING | 2,70mm |
| 11 | K21.03149 | 389 262 4735 | (389 262 4635) | 1 | 3./4.VİTES YILDIZ DİŞLİ | SYNCHRONIZER HUB | |
| 12 | K21.03151 | 945 262 6523 | (930 262 0523) | 2 | 1./2./3./4.VİTES HALKA | ENGAGING SLEEVE | |
| 13 | K21.03223 | 389 262 3713 | (945 262 3913) | 1 | 3.VİTES DİŞLİSİ 29 DİŞ | GEAR 3rd 29 T. | |
| 14 | K21.03810 | 018 981 6610 | (010 981 5310) | 2 | 2./4.VİTES MASURA BİLYA | NEEDLE CAGE | 85X93X53mm |
| 15 | K21.06042 | 930 262 1205 | (930 262 2405) | 1 | KAMALI MİL | MAIN SHAFT | |
| 16 | K21.03158 | 389 262 2812 | (945 262 3112) | 1 | 2.VİTES DİŞLİSİ 29 DİŞ | GEAR 2nd 29 T. | |
| 17 | K21.03160 | 945 262 5534 | | 2 | 1./2.VİTES SENKROMENÇ | ENGAGING RING | |
| 18 | K21.03161 | 389 262 2535 | (945 262 0135) | 1 | 1./2.VİTES SENK.YILDIZ DİŞLİ | SYNCHRONIZER HUB | |
| 19 | K21.04342 | 007 994 0041 | (387 262 2273) | 1 | 1./2.VİT.SENK.YIL.DİŞLİ EMN.SEK | RETAINING RING | 2,50mm |
| 20 | K21.03839 | 945 981 0010 | (018 981 8110) | 1 | 1.VİTES MASURA BİLYA | NEEDLE CAGE | 75X83X48mm |
| 21 | K21.03162 | 946 262 0811 | (389 262 2711) | 1 | 1.VİTES DİŞLİSİ 44 DİŞ | GEAR 1st 44 T. | |
| 22 | K21.06995 | 945 262 3935 | | 1 | GERİ VİTES YILDIZ DİŞLİ | SYNCHRONIZER HUB | |
| 23 | K21.03061 | 389 262 1823 | (389 262 0923) | 1 | GERİ VİTES HALKASI | ENGAGING SLEEVE | |
| 24 | K21.03065 | 389 262 0150 | | 1 | GERİ VİTES MASURA BİLYA ÇANAĞI | BEARING RACE | |
| 25 | K21.03813 | 013 981 1810 | (013 981 2610) | 1 | GERİ VİTES MASURA BİLYA | NEEDLE CAGE | 78X86X33mm |
| 26 | K21.06044 | 960 262 0033 | | 1 | GERİ VİTES DİŞLİSİ 40 DİŞ | REVERSE GEAR 40 T. | |
| 27 | K21.03661 | 002 981 8181 | | 1 | KAMALI MİL ARKA BİLYA | ROLLER BEARING | 60X130X35,2mm |
| 28 | K21.04331 | 007 994 1841 | (006 994 9941) | 1 | KAMALI MİL ARKA BİLYA SEKMANI | RETAINING RING | 2,50mm |



**Original parts names, oem numbers, symbols and descriptions used in this catalogue are for reference purposes only.**

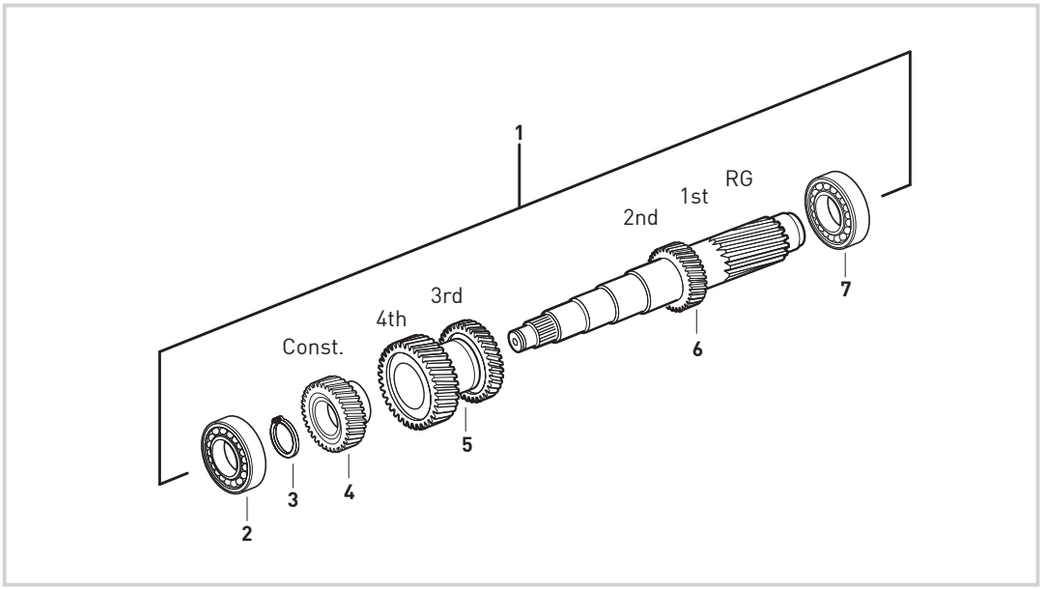


| Fig. | Kacmaz No. | Oem No | Oem Old No | Pcs. | Ürün Tanımı | Description | Sizes |
|---|---|---|---|---|---|---|---|
| 1 | K21.03551 | 945 260 7224 | | Kit | GRUP MİLİ KOMPLE | COUNTER SHAFT COMPLETE | |
| 2 | K21.03606 | 015 981 9005 | (014 981 1405) | 1 | GRUP MİLİ ÖN BİLYA | ROLLER BEARING | 50,8X100X35mm |
| 3 | K21.06425 | 389 994 0041 | | 1 | GRUP MİLİ ÖN BİLYA SEKMANI | RETAINING RING | 2,50mm |
| 4 | K21.03170 | 945 263 0710 | (945 263 0810) | 1 | TAKVİYE DİŞLİ KARŞILIĞI 31 DİŞ | CONSTANT GEAR 31 T. | |
| | | | (389 263 1410) | | | | |
| 5 | K21.03452 | 945 263 3213 | (945 263 0013) | 1 | 3./4.VİT.DİŞLİ KARŞILIĞI 29/34 DİŞ | DOUBLE GEAR 3rd/4th 29/34 T. | |
| 6 | K21.03175 | 945 263 2902 | (945 263 0902) | 1 | GRUP MİLİ 16/21 DİŞ | COUNTER SHAFT 16/21 T. | |
| | | | (389 263 3102) | | | | |
| | | | (389 263 2502) | | | | |
| | | | (389 263 1602) | | | | |
| | | | (389 263 1302) | | | | |
| 7 | K21.03624 | 016 981 1205 | (012 981 9405) | 1 | GRUP MİLİ ARKA BİLYA | ROLLER BEARING | 60X130X33,8mm |





Original parts names, oem numbers, symbols and descriptions used in this catalogue are for reference purposes only.

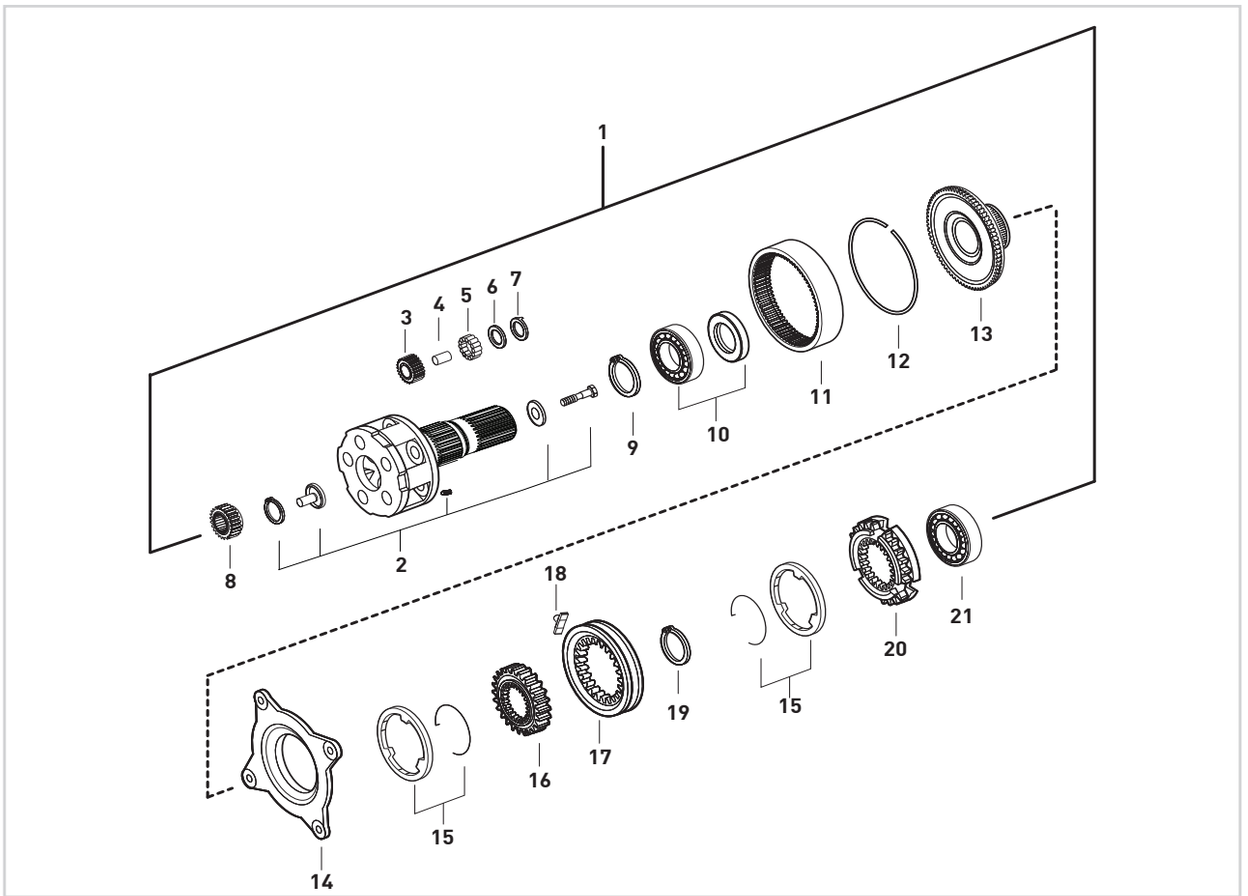


| Fig. | Kacmaz No. | Oem No | Oem Old No | Pcs. | Ürün Tanımı | Description | Sizes |
|---|---|---|---|---|---|---|---|
| 1 | K21.03554 | | | Kit | AĞIR SERİ ARKA AKTARMA KOMPLE | PLANETARY CARRIER COMPLETE | |
| 2 | K21.03180 | 946 260 3561 | (946 260 3661) | 1 | ŞANZIMAN HEYKELİ (BOŞ) | PLANETARY CARRIER (EMPTY) | |
| | | | (945 260 4561) | | | | |
| | | | (945 260 4461) | | | | |
| 3 | K21.03436 | 945 262 0006 | | 5 | HEYKEL KOZA DİŞLİSİ 28 DİŞ | PLANETARY GEAR 28 T. | |
| 4 | K21.03437 | 389 262 0407 | | 5 | HEYKEL KOZA DİŞLİ PİMİ | PLANETARY GEAR PIN | |
| 5 | K21.03816 | 000 981 4186 | (000 981 4386) | 125 | HEYKEL KOZA DİŞLİ TANE BİLYA | NEEDLE ROLLER | D5X39,6 |
| 6 | K21.04074 | 389 262 0162 | (389 262 6462) | 10 | HEYKEL KOZA DİŞLİ PULU | THRUST WASHER | |
| 7 | K21.04075 | 945 262 1162 | (945 262 0162) | 10 | HEYKEL KOZA DİŞLİ PULU | THRUST WASHER | |
| 8 | K21.03169 | 945 262 0909 | (389 262 0809) | 1 | GÜNEŞ DİŞLİ 25 DİŞ | SUN GEAR 25 T. | |
| | | | (389 262 0909) | | | | |
| 9 | K21.06864 | 000472 130000 | | 1 | ÇEMBER DİŞLİ BİLYA SEKMANI | RETAINING RING | 130X4mm |
| 10 | K21.03614 | 008 981 1325 | (004 981 8725) | 1 | ÇEMBER DİŞLİ BİLYASI | ROLLER BEARING | 90X130X14mm |
| 11 | K21.03449 | 945 262 1208 | (945 262 0808) | 1 | ÇEMBER DİŞLİ 85 DİŞ | RING WHEEL 85 T. | |
| 12 | K21.04253 | 389 262 0773 | | 1 | ÇEMBER DİŞLİ SEKMANI | LOCK RING | |
| 13 | K21.03442 | 930 262 0125 | (389 262 1425) | 1 | PLANET ÇAN DİŞLİ 85 DİŞ | CARRIER HUB 85 T. | |
| 14 | K21.03037 | 947 260 3036 | (947 260 0836) | 1 | TABLA SENKROMENÇ | FOLLOWER RING | |
| 15 | K21.03185 | 947 260 0945 | | 2 | AĞIR SERİ FRENLEME (Mo) | SYNCHRONIZING CONE / Mo | |
| 16 | K21.03079 | 389 262 4935 | (389 262 2035) | 1 | AĞIR SERİ YILDIZ DİŞLİ 73 DİŞ | SYNCHRONIZER HUB 73 T. | |
| 17 | K21.03033 | 945 262 6923 | (930 262 0623) | 1 | AĞIR SERİ HALKA | ENGAGING SLEEVE | |
| 18 | K21.03431 | 960 265 0049 | (947 265 0349) | 2 | AĞIR SERİ HİLAL PABUCU | SLIDING PAD | |
| 19 | K21.04356 | 000471 120000 | | 1 | AĞIR SERİ YILDIZ DİŞLİ SEKMANI | RETAINING RING | |
| 20 | K21.03186 | 945 262 3834 | | 1 | SERİ SENKROMENÇ | ENGAGING RING | |
| 21 | K21.03625 | 008 981 3025 | (008 981 5225) | 1 | ŞANZIMAN ARKA BİLYA | ROLLER BEARING | 80X150X28mm |



**Original parts names, oem numbers, symbols and descriptions used in this catalogue are for reference purposes only.**

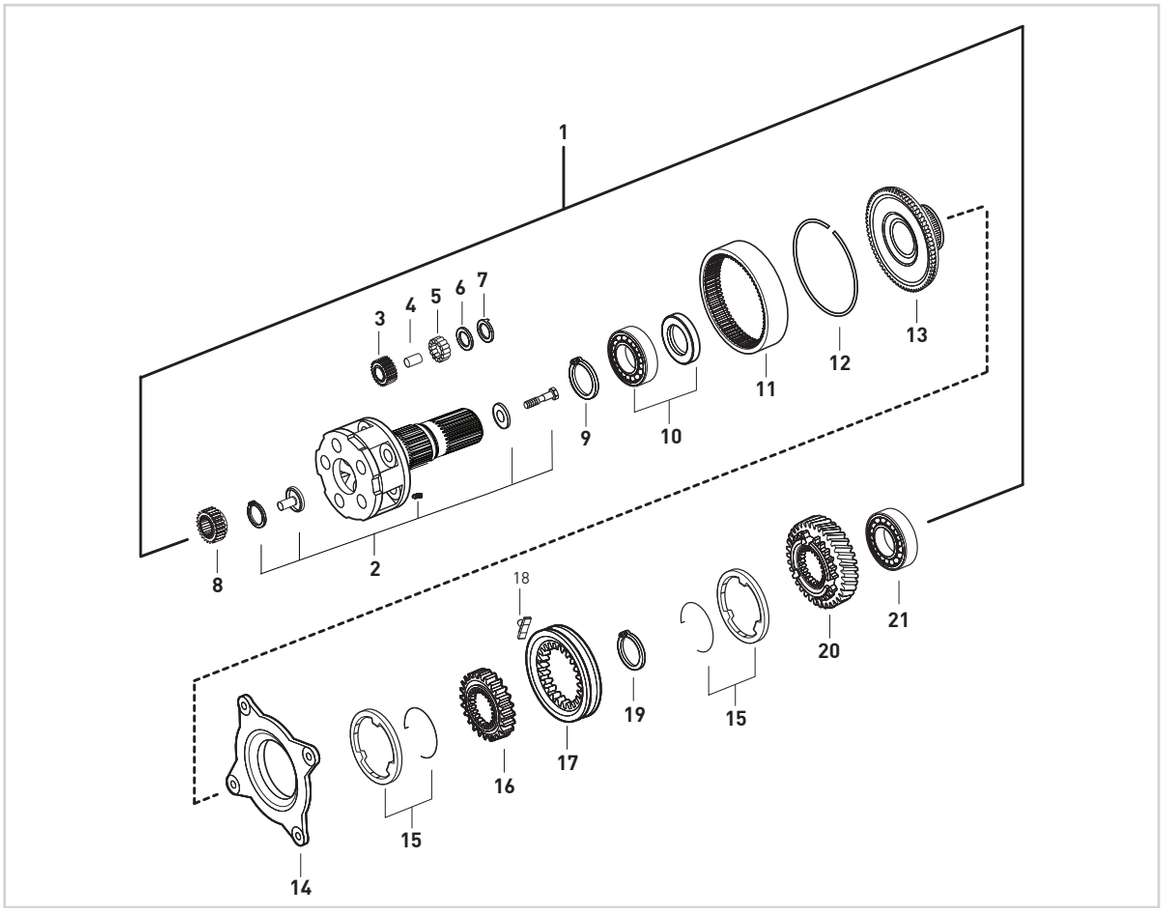


| Fig. | Kacmaz No. | Oem No | Oem Old No | Pcs. | Ürün Tanımı | Description | Sizes |
|---|---|---|---|---|---|---|---|
| 1 | K21.03678 | | | Kit | AĞIR SERİ ARKA AKTARMA KOMPLE | PLANETARY CARRIER COMPLETE | |
| 2 | K21.03180 | 946 260 3561 | (946 260 3661) | 1 | ŞANZIMAN HEYKELİ (BOŞ) | PLANETARY CARRIER (EMPTY) | |
| | | | (945 260 4561) | | | | |
| | | | (945 260 4461) | | | | |
| 3 | K21.03436 | 945 262 0006 | | 5 | HEYKEL KOZA DİŞLİSİ 28 DİŞ | PLANETARY GEAR 28 T. | |
| 4 | K21.03437 | 389 262 0407 | | 5 | HEYKEL KOZA DİŞLİ PİMİ | PLANETARY GEAR PIN | |
| 5 | K21.03816 | 000 981 4186 | (000 981 4386) | 125 | HEYKEL KOZA DİŞLİ TANE BİLYA | NEEDLE ROLLER | D5X39,6 |
| 6 | K21.04074 | 389 262 0162 | (389 262 6462) | 10 | HEYKEL KOZA DİŞLİ PULU | THRUST WASHER | |
| 7 | K21.04075 | 945 262 1162 | (945 262 0162) | 10 | HEYKEL KOZA DİŞLİ PULU | THRUST WASHER | |
| 8 | K21.03169 | 945 262 0909 | (389 262 0809) | 1 | GÜNEŞ DİŞLİ 25 DİŞ | SUN GEAR 25 T. | |
| | | | (389 262 0909) | | | | |
| 9 | K21.06864 | 000472 130000 | | 1 | ÇEMBER DİŞLİ BİLYA SEKMANI | RETAINING RING | 130X4mm |
| 10 | K21.03614 | 008 981 1325 | (004 981 8725) | 1 | ÇEMBER DİŞLİ BİLYASI | ROLLER BEARING | 90X130X14mm |
| 11 | K21.03449 | 945 262 1208 | (945 262 0808) | 1 | ÇEMBER DİŞLİ 85 DİŞ | RING WHEEL 85 T. | |
| 12 | K21.04253 | 389 262 0773 | | 1 | ÇEMBER DİŞLİ SEKMANI | LOCK RING | |
| 13 | K21.03442 | 930 262 0125 | (389 262 1425) | 1 | PLANET ÇAN DİŞLİ 85 DİŞ | CARRIER HUB 85 T. | |
| 14 | K21.03037 | 947 260 3036 | (947 260 0836) | 1 | TABLA SENKROMENÇ | FOLLOWER RING | |
| 15 | K21.03185 | 947 260 0945 | | 2 | AĞIR SERİ FRENLEME (Mo) | SYNCHRONIZING CONE / Mo | |
| 16 | K21.03079 | 389 262 4935 | (389 262 2035) | 1 | AĞIR SERİ YILDIZ DİŞLİ 73 DİŞ | SYNCHRONIZER HUB 73 T. | |
| 17 | K21.03033 | 945 262 6923 | (930 262 0623) | 1 | AĞIR SERİ HALKA | ENGAGING SLEEVE | |
| 18 | K21.03431 | 960 265 0049 | (947 265 0349) | 2 | AĞIR SERİ HİLAL PABUCU | SLIDING PAD | |
| 19 | K21.04356 | 000471 120000 | | 1 | AĞIR SERİ YILDIZ DİŞLİ SEKMANI | RETAINING RING | |
| 20 | K21.06058 | 930 264 0420 | | 1 | RETARDER DİŞLİSİ 59 DİŞ | RETARDER GEAR 59 T. | |
| 21 | K21.03625 | 008 981 3025 | (008 981 5225) | 1 | ŞANZIMAN ARKA BİLYA | ROLLER BEARING | 80X150X28mm |



Original parts names, oem numbers, symbols and descriptions used in this catalogue are for reference purposes only.

# PLANETARY CARRIER COMPLETE OLD W/OUT RETARDER

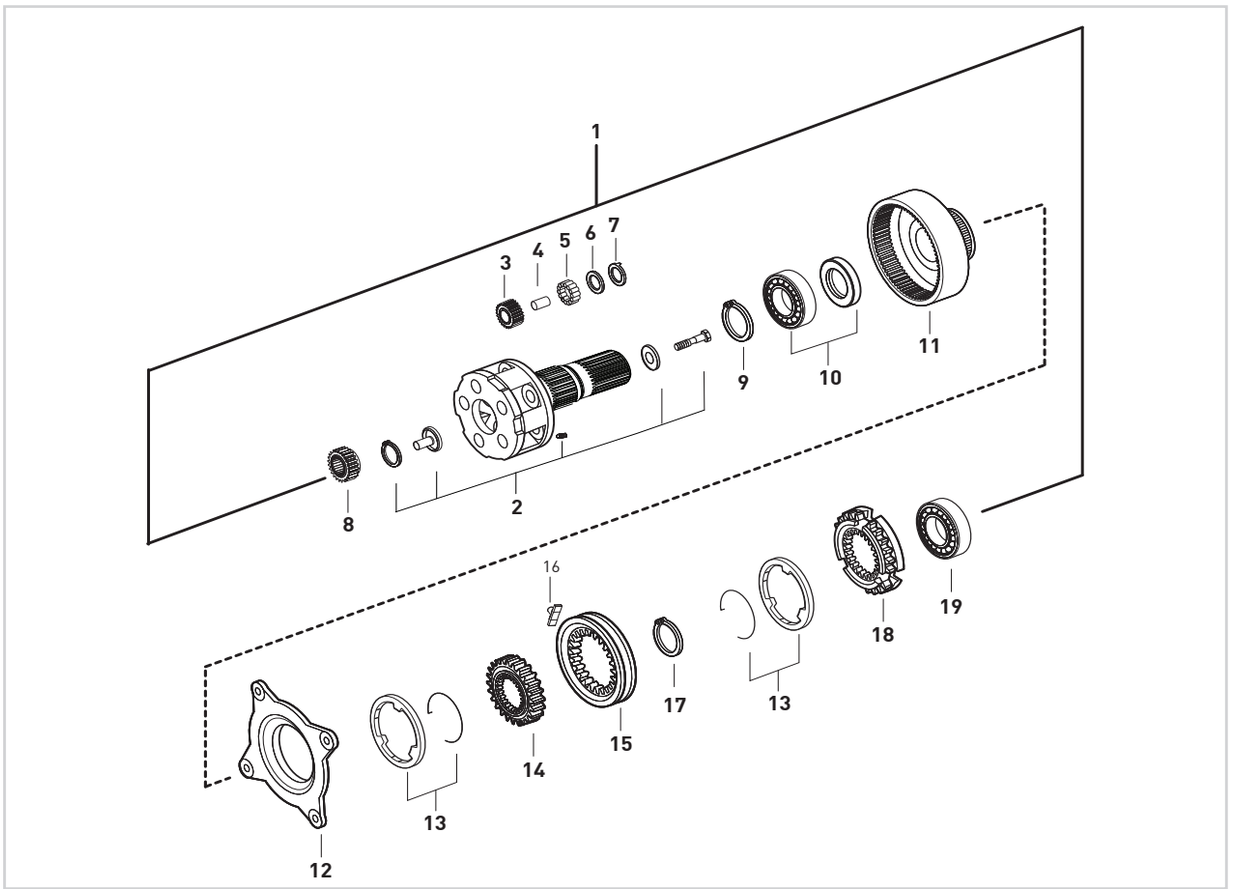


| Fig. | Kacmaz No. | Oem No | Oem Old No | Pcs. | Ürün Tanımı | Description | Sizes |
|---|---|---|---|---|---|---|---|
| 1 | K21.06382 | | | Kit | AĞIR SERİ ARKA AKTARMA KOMPLE | PLANETARY CARRIER COMPLETE | |
| 2 | K21.03180 | 946 260 3561 | (946 260 3661) | 1 | ŞANZIMAN HEYKELİ (BOŞ) | PLANETARY CARRIER (EMPTY) | |
| | | | (945 260 4561) | | | | |
| | | | (945 260 4461) | | | | |
| 3 | K21.03436 | 945 262 0006 | | 5 | HEYKEL KOZA DİŞLİSİ 28 DİŞ | PLANETARY GEAR 28 T. | |
| 4 | K21.03437 | 389 262 0407 | | 5 | HEYKEL KOZA DİŞLİ PİMİ | PLANETARY GEAR PIN | |
| 5 | K21.03816 | 000 981 4186 | (000 981 4386) | 125 | HEYKEL KOZA DİŞLİ TANE BİLYA | NEEDLE ROLLER | D5X39,6 |
| 6 | K21.04074 | 389 262 0162 | (389 262 6462) | 10 | HEYKEL KOZA DİŞLİ PULU | THRUST WASHER | |
| 7 | K21.04075 | 389 262 1162 | (945 262 0162) | 10 | HEYKEL KOZA DİŞLİ PULU | THRUST WASHER | |
| 8 | K21.03169 | 945 262 0909 | (389 262 0809) | 1 | GÜNEŞ DİŞLİ 25 DİŞ | SUN GEAR 25 T. | |
| | | | (389 262 0909) | | | | |
| 9 | K21.06864 | 000472 130000 | | 1 | ÇEMBER DİŞLİ BİLYA SEKMANI | RETAINING RING | 130X4mm |
| 10 | K21.03614 | 008 981 1325 | (004 981 8725) | 1 | ÇEMBER DİŞLİ BİLYASI | ROLLER BEARING | 90X130X14mm |
| 11 | K21.03438 | 945 262 0108 | (389 262 0808) | 1 | ÇEMBER DİŞLİ 85 DİŞ | RING WHEEL 85 T. | |
| 12 | K21.03018 | 389 260 2036 | | 1 | TABLA SENKROMENÇ | FOLLOWER RING | |
| 13 | K21.03017 | 389 262 0537 | (389 262 0037) | 2 | AĞIR SERİ FRENLEME (Mo) | SYNCHRONIZING CONE / Mo | |
| 14 | K21.03079 | 389 262 4935 | (389 262 2035) | 1 | AĞIR SERİ YILDIZ DİŞLİ 73 DİŞ | SYNCHRONIZER HUB 73 T. | |
| 15 | K21.03028 | 945 262 6623 | (945 262 0823) | 1 | AĞIR SERİ HALKA 73 DİŞ | ENGAGING SLEEVE 73 T. | |
| | | | (389 262 1623) | | | | |
| | | | (389 262 3823) | | | | |
| 16 | K21.03406 | 389 265 2449 | (389 265 1249) | 2 | AĞIR SERİ HİLAL PABUCU | SLIDING PAD | |
| 17 | K21.04356 | 000471 120000 | | 1 | AĞIR SERİ YILDIZ DİŞLİ SEKMANI | RETAINING RING | |
| 18 | K21.03187 | 389 262 9234 | (945 262 1234) | 1 | SERİ SENKROMENÇ | ENGAGING RING | |
| 19 | K21.03625 | 008 981 5225 | (008 981 3025) | 1 | ŞANZIMAN ARKA BİLYA | ROLLER BEARING | 80X150X28mm |



**Original parts names, oem numbers, symbols and descriptions used in this catalogue are for reference purposes only.**

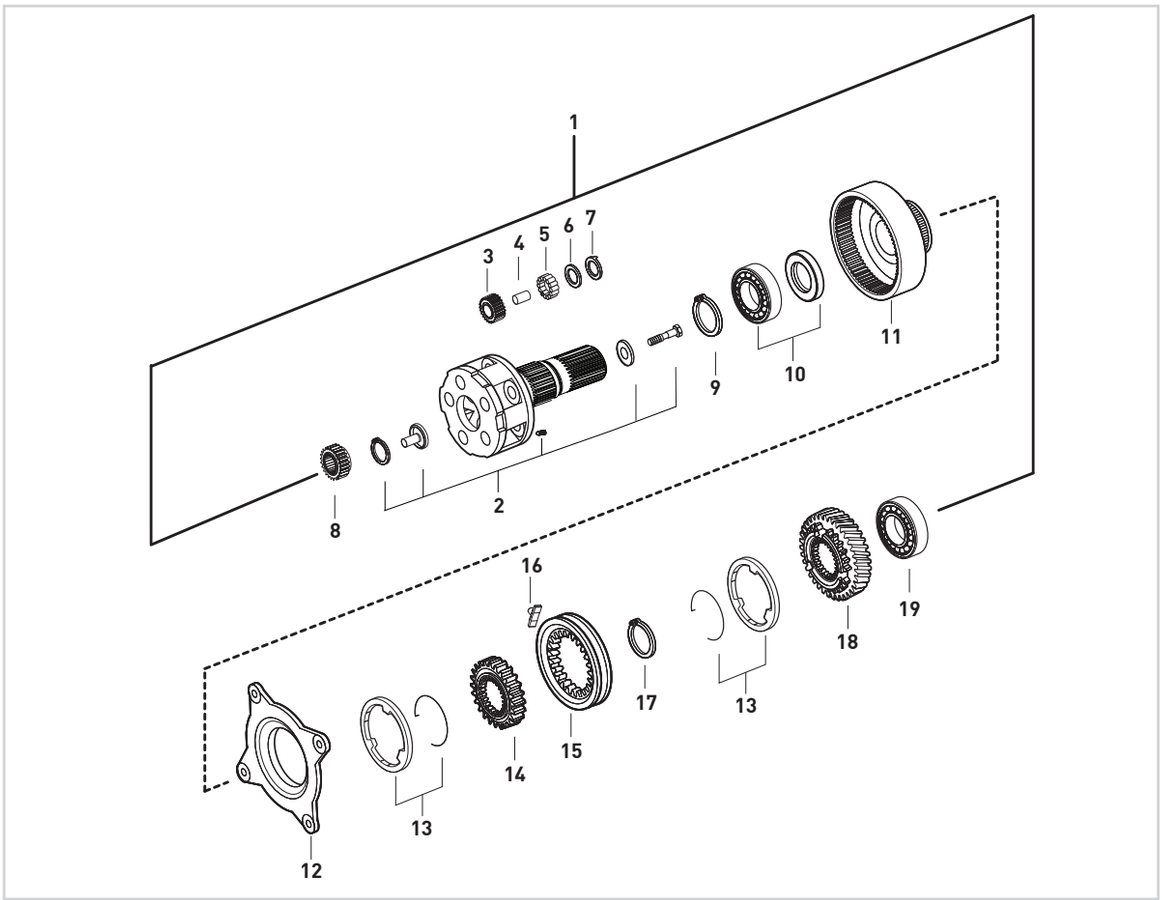


| Fig. | Kacmaz No. | Oem No | Oem Old No | Pcs. | Ürün Tanımı | Description | Sizes |
|---|---|---|---|---|---|---|---|
| 1 | K21.03677 | | | Kit | AĞIR SERİ ARKA AKTARMA KOMPLE | PLANETARY CARRIER COMPLETE | |
| 2 | K21.03180 | 946 260 3561 | (946 260 3661) | 1 | ŞANZIMAN HEYKELİ (BOŞ) | PLANETARY CARRIER (EMPTY) | |
| | | | (945 260 4561) | | | | |
| | | | (945 260 4461) | | | | |
| 3 | K21.03436 | 945 262 0006 | | 5 | HEYKEL KOZA DİŞLİSİ 28 DİŞ | PLANETARY GEAR 28 T. | |
| 4 | K21.03437 | 389 262 0407 | | 5 | HEYKEL KOZA DİŞLİ PİMİ | PLANETARY GEAR PIN | |
| 5 | K21.03816 | 000 981 4186 | (000 981 4386) | 125 | HEYKEL KOZA DİŞLİ TANE BİLYA | NEEDLE ROLLER | D5X39,6 |
| 6 | K21.04074 | 389 262 0162 | (389 262 6462) | 10 | HEYKEL KOZA DİŞLİ PULU | THRUST WASHER | |
| 7 | K21.04075 | 945 262 1162 | (945 262 0162) | 10 | HEYKEL KOZA DİŞLİ PULU | THRUST WASHER | |
| 8 | K21.03169 | 945 262 0909 | (389 262 0809) | 1 | GÜNEŞ DİŞLİ 25 DİŞ | SUN GEAR 25 T. | |
| | | | (389 262 0909) | | | | |
| 9 | K21.06864 | 000472 130000 | | 1 | ÇEMBER DİŞLİ BİLYA SEKMANI | RETAINING RING | 130X4mm |
| 10 | K21.03614 | 008 981 1325 | (004 981 8725) | 1 | ÇEMBER DİŞLİ BİLYASI | ROLLER BEARING | 90X130X14mm |
| 11 | K21.03438 | 945 262 0108 | (389 262 0808) | 1 | ÇEMBER DİŞLİ 85 DİŞ | RING WHEEL 85 T. | |
| 12 | K21.03018 | 389 260 2036 | | 1 | TABLA SENKROMENÇ | FOLLOWER RING | |
| 13 | K21.03017 | 389 262 0537 | (389 262 0037) | 2 | AĞIR SERİ FRENLEME (Mo) | SYNCHRONIZING CONE / Mo | |
| 14 | K21.03079 | 389 262 4935 | (389 262 2035) | 1 | AĞIR SERİ YILDIZ DİŞLİ 73 DİŞ | SYNCHRONIZER HUB 73 T. | |
| 15 | K21.03028 | 945 262 6623 | (945 262 0823) | 1 | AĞIR SERİ HALKA 73 DİŞ | ENGAGING SLEEVE 73 T. | |
| | | | (389 262 1623) | | | | |
| | | | (389 262 3823) | | | | |
| 16 | K21.03406 | 389 265 2449 | (389 265 1249) | 2 | AĞIR SERİ HİLAL PABUCU | SLIDING PAD | |
| 17 | K21.04356 | 000471 120000 | | 1 | AĞIR SERİ YILDIZ DİŞLİ SEKMANI | RETAINING RING | |
| 18 | K21.06059 | 945 264 0420 | (945 264 0220) | 1 | RETARDER DİŞLİSİ 59 DİŞ | RETARDER GEAR 59 T. | |
| 19 | K21.03625 | 008 981 3025 | (008 981 5225) | 1 | ŞANZIMAN ARKA BİLYA | ROLLER BEARING | 80X150X28mm |



Original parts names, oem numbers, symbols and descriptions used in this catalogue are for reference purposes only.

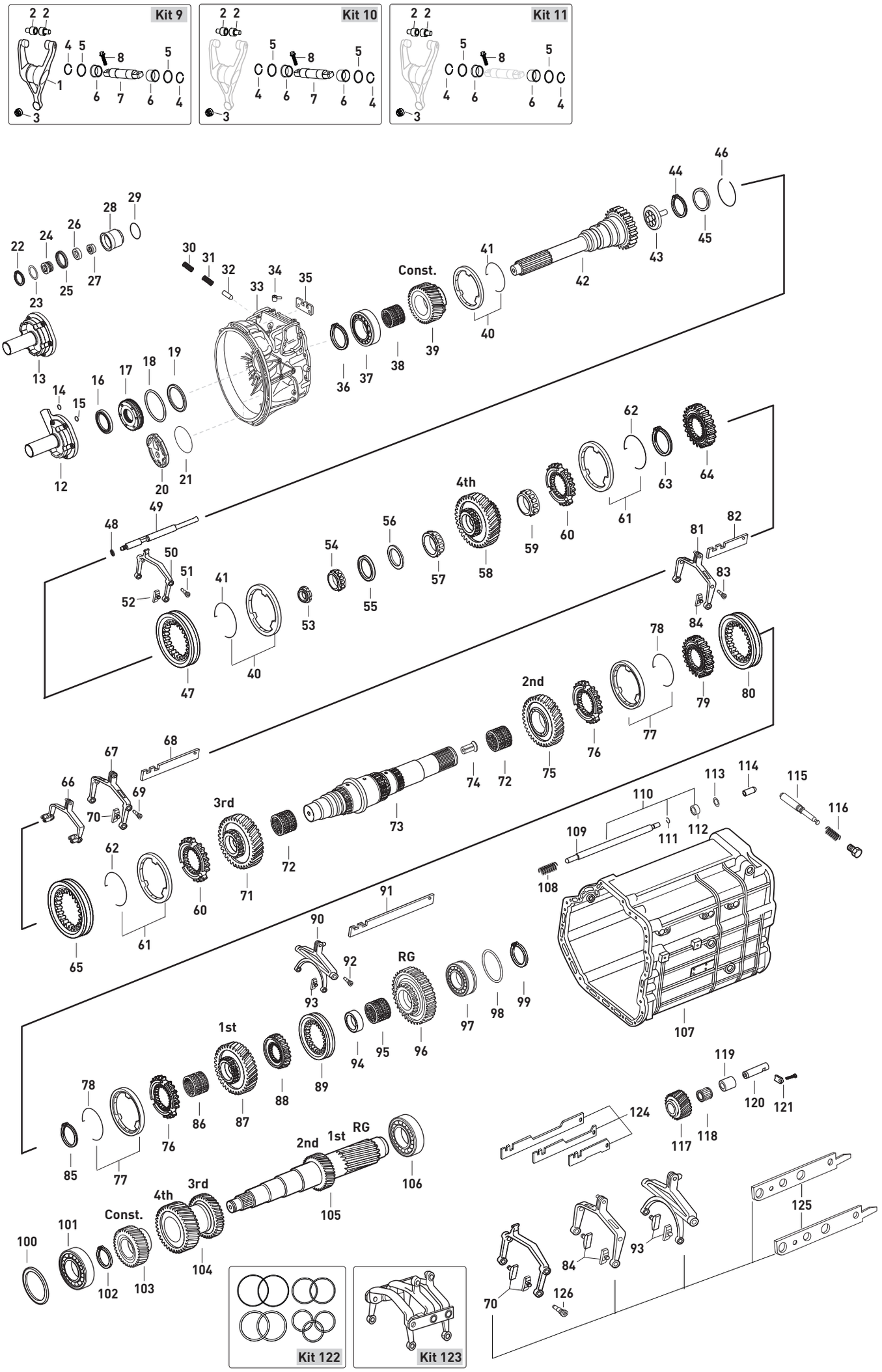






Original parts names, oem numbers, symbols and descriptions used in this catalogue are for reference purposes only.

| Fig. | Kacmaz No | Oem No | Oem Old No | Pcs. | Ürün Tanımı | Description | Sizes | Not | 715540 | 715528 | | |
|---|---|---|---|---|---|---|---|---|---|---|---|---|
| 1 | | 655 250 1513 | | 1 | DEBRİYAJ ÇATALI | RELEASE FORK | | | ♦ | ♦ | | |
| 2 | K21.07038 | 000 254 0017 | | 2 | DEBRİYAJ ÇATAL BURÇ VE PİMİ | CAM ROLLER | | | ♦ | ♦ | | |
| 3 | K21.07040 | 000 254 0335 | | 1 | DEBRİYAJ ÇATAL PLASTİK BURCU | PLASTIC BUSHING | | | ♦ | ♦ | | |
| 4 | | 912009 035100 | | 2 | DEBRİYAJ ÇATAL MİL SEKMANI | RETAINING RING | | | ♦ | ♦ | | |
| 5 | | 000988 036100 | | 2 | DEBRİYAJ ÇATAL MİL AYAR PULU | WASHER | | | ♦ | ♦ | | |
| 6 | | 002 992 1501 | | 2 | DEBRİYAJ ÇATAL MİL BURCU | BUSHING | | | ♦ | ♦ | | |
| 7 | | 655 254 0206 | | 1 | DEBRİYAJ ÇATAL MİLİ | SHAFT | | | ♦ | ♦ | | |
| 8 | | 910105 012026 | | 2 | DEBRİYAJ ÇATAL MİL VİDASI | SCREW | M12X40mm | | ♦ | ♦ | | |
| 9 | K21.07036 | 655 250 1813 | | Kit | DEBRİYAJ ÇATALI KOMPLE | RELEASE FORK COMPLETE | | | ♦ | ♦ | | |
| 9 | K21.97036 | 655 250 1813-S | | Kit | DEB.ÇATALI KOMPLE (BİLYALI TİP) | RELEASE FORK COMPLETE | | WITH BEARING | ♦ | ♦ | | |
| 10 | K21.07037 | | | Kit | DEBRİYAJ ÇATALI TAMİR TAKIMI | RELEASE FORK REPAIR KIT | | | ♦ | ♦ | | |
| 11 | K21.07039 | | | Kit | DEBRİYAJ ÇATALI TAMİR TK.MİLSİZ | RELEASE FORK REPAIR KIT | | W/OUT SHAFT | ♦ | ♦ | | |
| 12 | K21.03429 | 945 261 1118 | (945 261 0118) | 1 | PRİZDİREK KEÇE KAPAĞI | COVER | | | ♦ | ♦ | | |
| | | | (945 261 0818) | | | | | | | | | |
| 13 | K21.03430 | 389 261 4518 | | 1 | PRİZDİREK KEÇE KAPAĞI | COVER | | | ♦ | | | |
| 13 | | 945 261 2818 | | 1 | PRİZDİREK KEÇE KAPAĞI | COVER | | | ♦ | | | |
| 14 | K21.06637 | 019 997 8348 | (020 997 7948) | 1 | PRİZDİREK KEÇE KAPAK ORİNGİ | O-RING | 14X4mm | | ♦ | ♦ | | |
| 15 | K21.06636 | 015 997 4048 | (020 997 8748) | 1 | PRİZDİREK KEÇE KAPAK ORİNGİ | O-RING | 5X3mm | | ♦ | ♦ | | |
| 16 | K21.03509 | 019 997 0547 | (023 997 7847) | 1 | PRİZDİREK KEÇESİ | OIL SEAL | 56X72X8mm | | ♦ | ♦ | | |
| | | | (019 997 0647) | | | | | | | | | |
| | | | (022 997 8547) | | | | | | | | | |
| 17 | K21.06038 | 389 261 0665 | (389 261 0765) | 1 | YAĞ TUTUCU DİSK | OIL BAFFLE | 75X16mm | | ♦ | ♦ | | |
| | | | (389 261 0865) | | | | | | | | | |
| 18 | K21.06635 | 020 997 7848 | | 1 | PRİZDİREK KEÇE KAPAK ORİNGİ | O-RING | 138X3mm | | ♦ | ♦ | | |
| 18 | K21.06712 | 028 997 2248 | (019 997 7248) | 1 | PRİZDİREK KEÇE KAPAK ORİNGİ | O-RING | 140X3mm | | ♦ | | | |
| 19 | K21.04162 | 389 262 4152 | (389 262 0955) | 1 | PRİZDİREK AYAR RAYNELİ | THRUST WASHER | 0,10mm | | ♦ | ♦ | | |
| 19 | K21.04243 | 389 262 0855 | | 1 | PRİZDİREK AYAR RAYNELİ | THRUST WASHER | 0,15mm | | ♦ | ♦ | | |
| 19 | K21.04151 | 389 262 0755 | | 1 | PRİZDİREK AYAR RAYNELİ | THRUST WASHER | 0,20mm | | ♦ | ♦ | | |
| 19 | K21.06715 | 389 262 3055 | | 1 | PRİZDİREK AYAR RAYNELİ | THRUST WASHER | 0,25mm | | ♦ | ♦ | | |
| 19 | K21.04221 | 389 262 3255 | | 1 | PRİZDİREK AYAR RAYNELİ | THRUST WASHER | 0,31mm | | ♦ | ♦ | | |
| 19 | K21.04163 | 389 262 3555 | (389 262 0655) | 1 | PRİZDİREK AYAR RAYNELİ | THRUST WASHER | 0,40mm | | ♦ | ♦ | | |
| | | | (389 262 4452) | | | | | | | | | |
| 19 | K21.04164 | 389 262 3755 | (389 262 1954) | 1 | PRİZDİREK AYAR RAYNELİ | THRUST WASHER | 0,46mm | | ♦ | ♦ | | |
| 19 | K21.04246 | 389 262 3855 | | 1 | PRİZDİREK AYAR RAYNELİ | THRUST WASHER | 0,49mm | | ♦ | ♦ | | |
| 19 | K21.04250 | 389 262 4055 | (389 262 0155) | 1 | PRİZDİREK AYAR RAYNELİ | THRUST WASHER | 0,55mm | | ♦ | ♦ | | |
| | | | (389 262 2154) | | | | | | | | | |
| 19 | K21.04167 | 389 262 4255 | (389 262 2254) | 1 | PRİZDİREK AYAR RAYNELİ | THRUST WASHER | 0,61mm | | ♦ | ♦ | | |
| 19 | K21.04168 | 389 262 4355 | (389 262 2354) | 1 | PRİZDİREK AYAR RAYNELİ | THRUST WASHER | 0,64mm | | ♦ | ♦ | | |
| 19 | K21.04169 | 389 262 4555 | (389 262 2454) | 1 | PRİZDİREK AYAR RAYNELİ | THRUST WASHER | 0,70mm | | ♦ | ♦ | | |
| 19 | K21.04170 | 389 262 4755 | (389 262 2554) | 1 | PRİZDİREK AYAR RAYNELİ | THRUST WASHER | 0,76mm | | ♦ | ♦ | | |
| 19 | K21.04281 | 389 262 4855 | (389 262 0555) | 1 | PRİZDİREK AYAR RAYNELİ | THRUST WASHER | 0,79mm | | ♦ | ♦ | | |
| 19 | K21.04282 | 389 262 5555 | | 1 | PRİZDİREK AYAR RAYNELİ | THRUST WASHER | 1,00mm | | ♦ | ♦ | | |
| 19 | K21.04171 | 389 262 9654 | (389 262 2654) | 1 | PRİZDİREK AYAR RAYNELİ | THRUST WASHER | 2,00mm | | ♦ | ♦ | | |
| 20 | | 976 261 1833 | (976 261 1733) | 1 | GRUP MİLİ ÖN BİLYA KAPAĞI | COVER | | | ♦ | ♦ | | |
| | | | (976 261 1633) | | | | | | | | | |
| 20 | | 976 261 1133 | | 1 | GRUP MİLİ ÖN BİLYA KAPAĞI | COVER | | | ♦ | | | |
| 20 | | 945 261 0333 | | 1 | GRUP MİLİ ÖN BİLYA KAPAĞI | COVER | | | ♦ | | | |
| 21 | K21.06533 | 028 997 2348 | (004 997 2248) | 1 | GRUP MİLİ BİLYA KAPAK ORİNGİ | O-RING | 100X3mm | | ♦ | ♦ | | |
| 21 | | 022 997 4048 | | 1 | GRUP MİLİ BİLYA KAPAK ORİNGİ | O-RING | 103X2mm | | ♦ | | | |
| 22 | | 006 994 4241 | (000472 065001) | 1 | TAKVİYE PİSTON SEKMANI | RETAINING RING | 65X2,5mm | | ♦ | ♦ | | |
| 23 | K21.04233 | 389 262 2555 | | 1 | TAKVİYE SİLİNDİR PULU | SPACER WASHER | 0,70mm | | ♦ | ♦ | | |
| 23 | K21.04234 | 389 262 2655 | | 1 | TAKVİYE SİLİNDİR PULU | SPACER WASHER | 0,90mm | | ♦ | ♦ | | |
| 23 | K21.04112 | 389 262 3254 | | 1 | TAKVİYE SİLİNDİR PULU | SPACER WASHER | 1,05mm | | ♦ | ♦ | | |

NOTES :
Parts encoded alphabetic and numaric are used together.

NOTLAR :
Alfabetik ve rakam ile kodlanan parçalar birlikte kullanılır.





Original parts names, oem numbers, symbols and descriptions used in this catalogue are for reference purposes only.

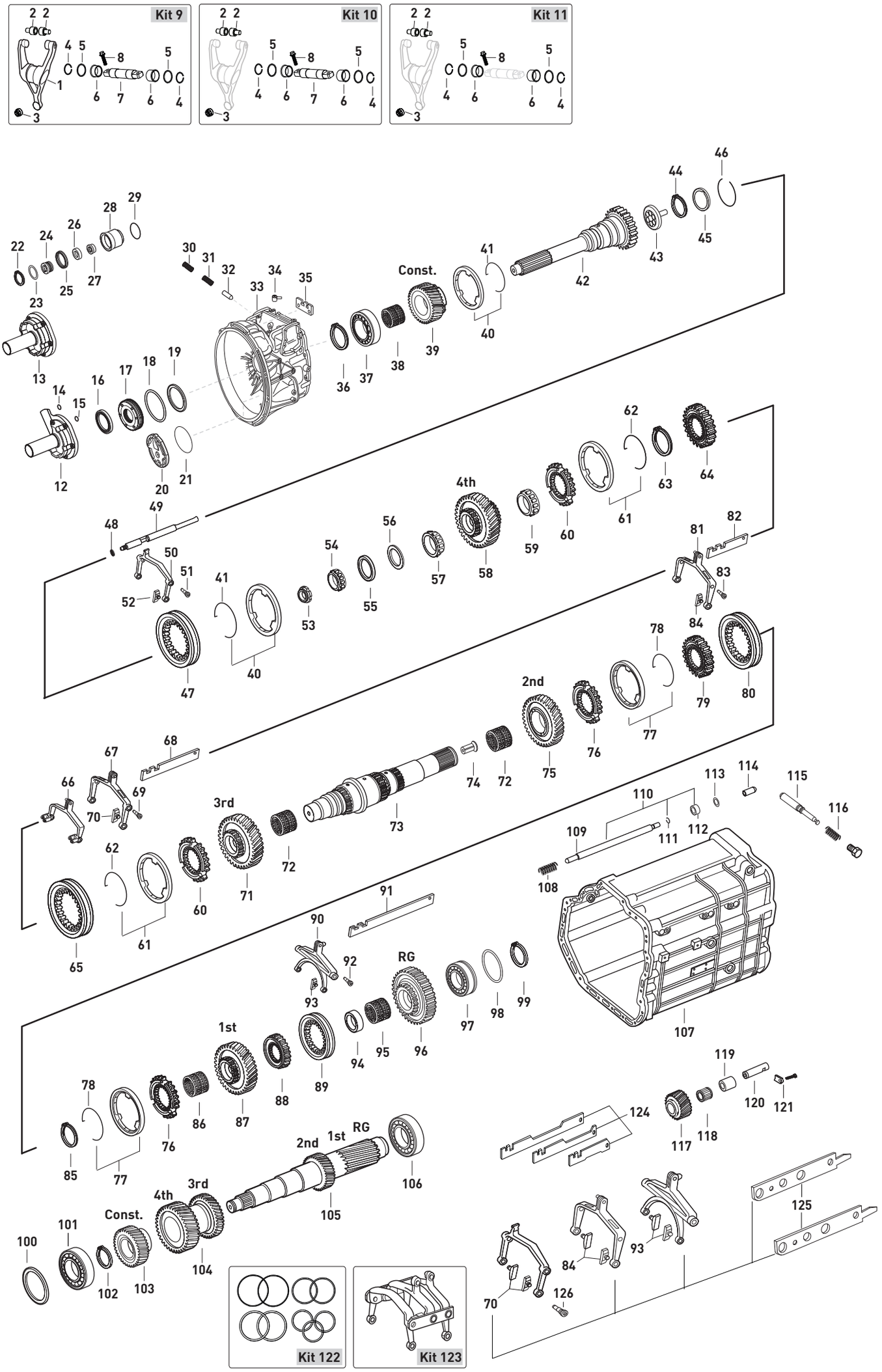






Original parts names, oem numbers, symbols and descriptions used in this catalogue are for reference purposes only.

| Fig. | Kacmaz No | Oem No | Oem Old No | Pcs. | Ürün Tanımı | Description | Sizes | Not | 715540 | 715528 | | |
|---|---|---|---|---|---|---|---|---|---|---|---|---|
| 23 | K21.04111 | 389 262 3354 | | 1 | TAKVİYE SİLİNDİR PULU | SPACER WASHER | 1,10mm | | ♦ | ♦ | | |
| 23 | K21.04109 | 389 262 3554 | | 1 | TAKVİYE SİLİNDİR PULU | SPACER WASHER | 1,20mm | | ♦ | ♦ | | |
| 23 | K21.04105 | 389 262 2052 | | 1 | TAKVİYE SİLİNDİR PULU | SPACER WASHER | 1,40mm | | ♦ | ♦ | | |
| 23 | K21.04093 | 389 262 2355 | | 1 | TAKVİYE SİLİNDİR PULU | SPACER WASHER | 1,79mm | | ♦ | ♦ | | |
| 23 | K21.04025 | 389 262 3252 | | 1 | TAKVİYE SİLİNDİR PULU | SPACER WASHER | 2,00mm | | ♦ | ♦ | | |
| 23 | K21.04024 | 389 262 3352 | | 1 | TAKVİYE SİLİNDİR PULU | SPACER WASHER | 2,50mm | | ♦ | ♦ | | |
| 24 | K21.06994 | 945 267 0218 | (387 267 0918) | 1 | TAKVİYE MİL PİSTONU | PISTON | | | ♦ | ♦ | | |
| | | | (387 267 0618) | | | | | | | | | |
| 25 | K21.03524 | 006 997 6447 | (020 997 6647) | 1 | TAKVİYE HAVA KEÇESİ | OIL SEAL | 41X48X11,5mm | | ♦ | ♦ | | |
| | | | (012 997 3347) | | | | | | | | | |
| 26 | K21.04178 | 387 267 0650 | (387 267 0250) | 1 | TAKVİYE SİLİNDİR BURCU | BUSHING | 34X22X8mm | | ♦ | ♦ | | |
| 27 | K21.03523 | 000 267 0197 | (000 267 0397) | 1 | TAKVİYE HİLAL MİL KEÇESİ | OIL SEAL | 22X32X8mm | | ♦ | ♦ | | |
| 28 | K21.06036 | 945 267 0819 | (945 267 0119) | 1 | TAKVİYE SİLİNDİR GÖVDESİ | CYLINDER | | | ♦ | ♦ | | |
| | | | (945 267 0719) | | | | | | | | | |
| | | | (945 267 0019) | | | | | | | | | |
| 29 | K21.06534 | 022 997 4248 | | 1 | TAKVİYE SİLİNDİR ORİNGİ | O-RING | 55,6X3mm | | ♦ | ♦ | | |
| 30 | K21.06015 | 387 993 4501 | | 1 | ŞANZ.TAKVİYE KİLİT FİŞEK YAYI | SPRING | 6,2X63mm | | ♦ | ♦ | | |
| 31 | K21.03500 | 387 993 4401 | (387 993 2501) | 1 | KİLİT YAYI | SPRING | 9,8X63,3mm | | ♦ | ♦ | | |
| 32 | K21.03492 | 389 267 1174 | (387 267 0074) | 1 | KİLİT FİŞEĞİ | PIN | | | ♦ | ♦ | | |
| 33 | K21.06526 | 945 260 8412 | (945 261 7501) | 1 | ŞANZIMAN ÖN GÖVDE | HOUSING | | | ♦ | | | |
| 33 | K21.06582 | 945 260 0111 | (945 260 2712) | 1 | ŞANZIMAN ÖN GÖVDE | HOUSING | | | ♦ | | | |
| 33 | | 945 260 5411 | | 1 | ŞANZIMAN ÖN GÖVDE | HOUSING | | | ♦ | | | |
| 33 | | 960 260 6912 | | 1 | ŞANZIMAN ÖN GÖVDE | HOUSING | | | | ♦ | | |
| 34 | K21.06529 | 437 261 0082 | (945 261 0082) | 1 | ŞANZIMAN HAVALANDIRMA | CAP | | | ♦ | | | |
| 35 | K21.06585 | 945 267 0359 | | 1 | VİTES HİLAL ÇITA KİLİTLEMESİ | BRACKET | | | ♦ | | | |
| 35 | K21.06509 | 945 267 0459 | | 1 | VİTES HİLAL ÇITA KİLİTLEMESİ | BRACKET | | | ♦ | ♦ | | |
| 36 | K21.04347 | 387 262 8673 | | 1 | PRİZDİREK ÖN BİLYA SEKMANI | RETAINING RING | 3,15mm | | ♦ | ♦ | | |
| 36 | K21.04346 | 387 262 8773 | | 1 | PRİZDİREK ÖN BİLYA SEKMANI | RETAINING RING | 3,20mm | | ♦ | ♦ | | |
| 36 | K21.07015 | 387 262 8873 | | 1 | PRİZDİREK ÖN BİLYA SEKMANI | RETAINING RING | 3,25mm | | ♦ | ♦ | | |
| 36 | K21.04348 | 387 262 8973 | | 1 | PRİZDİREK ÖN BİLYA SEKMANI | RETAINING RING | 3,30mm | | ♦ | ♦ | | |
| 36 | K21.07016 | 387 262 9073 | | 1 | PRİZDİREK ÖN BİLYA SEKMANI | RETAINING RING | 3,35mm | | ♦ | ♦ | | |
| 36 | K21.04349 | 387 262 9173 | | 1 | PRİZDİREK ÖN BİLYA SEKMANI | RETAINING RING | 3,40mm | | ♦ | ♦ | | |
| 36 | K21.07017 | 387 262 9273 | | 1 | PRİZDİREK ÖN BİLYA SEKMANI | RETAINING RING | 3,45mm | | ♦ | ♦ | | |
| 36 | K21.04350 | 387 262 9373 | | 1 | PRİZDİREK ÖN BİLYA SEKMANI | RETAINING RING | 3,50mm | | ♦ | ♦ | | |
| 37 | K21.03618 | 011 981 1305 | (014 981 9005) | 1 | PRİZDİREK ÖN BİLYA | ROLLER BEARING | 75X140X34,25mm | | ♦ | ♦ | | |
| | | | (008 981 8605) | | | | | | | | | |
| | | | (008 981 2605) | | | | | | | | | |
| 38 | K21.03815 | 016 981 0010 | (018 981 8710) | 1 | TAKVİYE DİŞLİ MASURA BİLYA | NEEDLE CAGE | 89X97X40mm | | ♦ | ♦ | | |
| 39 | K21.03030 | 945 262 4110 | (945 262 1610) | 1 | TAKVİYE DİŞLİSİ 32 DİŞ | CONSTANT GEAR 32 T. | | (1) | ♦ | | | |
| | | | (945 262 0010) | | | | | | | | | |
| | | | (389 262 6310) | | | | | | | | | |
| | | | (945 262 1110) | | | | | | | | | |
| 39 | K21.03130 | 945 262 9817 | (945 262 5417) | 1 | TAKVİYE DİŞLİSİ 32 DİŞ | CONSTANT GEAR 32 T. | | (2) | ♦ | ♦ | | |
| | | | (945 262 7517) | | | | | | | | | |
| | | | (945 262 7617) | | | | | | | | | |
| 39 | K21.03131 | 945 262 4710 | (389 262 3910) | 1 | TAKVİYE DİŞLİSİ 39 DİŞ | CONSTANT GEAR 39 T. | | (3) | ♦ | | | |
| | | | (945 262 0210) | | | | | | | | | |
| 40 | K21.03015 | 389 262 0637 | (387 262 0837) | 2 | TAKVİYE FRENLEME (Mo) | SYNCHRONIZING CONE / Mo | | (1)(3) | ♦ | | | |
| | | | (389 262 1037) | | | | | | | | | |
| 40 | K21.03401 | 945 260 0450 | | 2 | TAKVİYE FRENLEME (C) | SYNCHRONIZING CONE / C | | (1)(3) | ♦ | | | |
| 40 | K21.03136 | 945 260 2245 | (946 262 6337) | 2 | TAKVİYE FRENLEME (Mo) | SYNCHRONIZING CONE / Mo | | (2) | ♦ | ♦ | | |
| 40 | K21.06274 | 947 260 2845 | (947 260 0545) | 2 | TAKVİYE FRENLEME (C) | SYNCHRONIZING CONE / C | | (2) | ♦ | ♦ | | |
| 41 | K21.03044 | 387 262 1093 | (387 262 0693) | 2 | FRENLEME TELİ | SPRING | | | ♦ | ♦ | | |

NOTES :
Parts encoded alphabetic and numaric are used together.

NOTLAR :
Alfabetik ve rakam ile kodlanan parçalar birlikte kullanılır.





Original parts names, oem numbers, symbols and descriptions used in this catalogue are for reference purposes only.

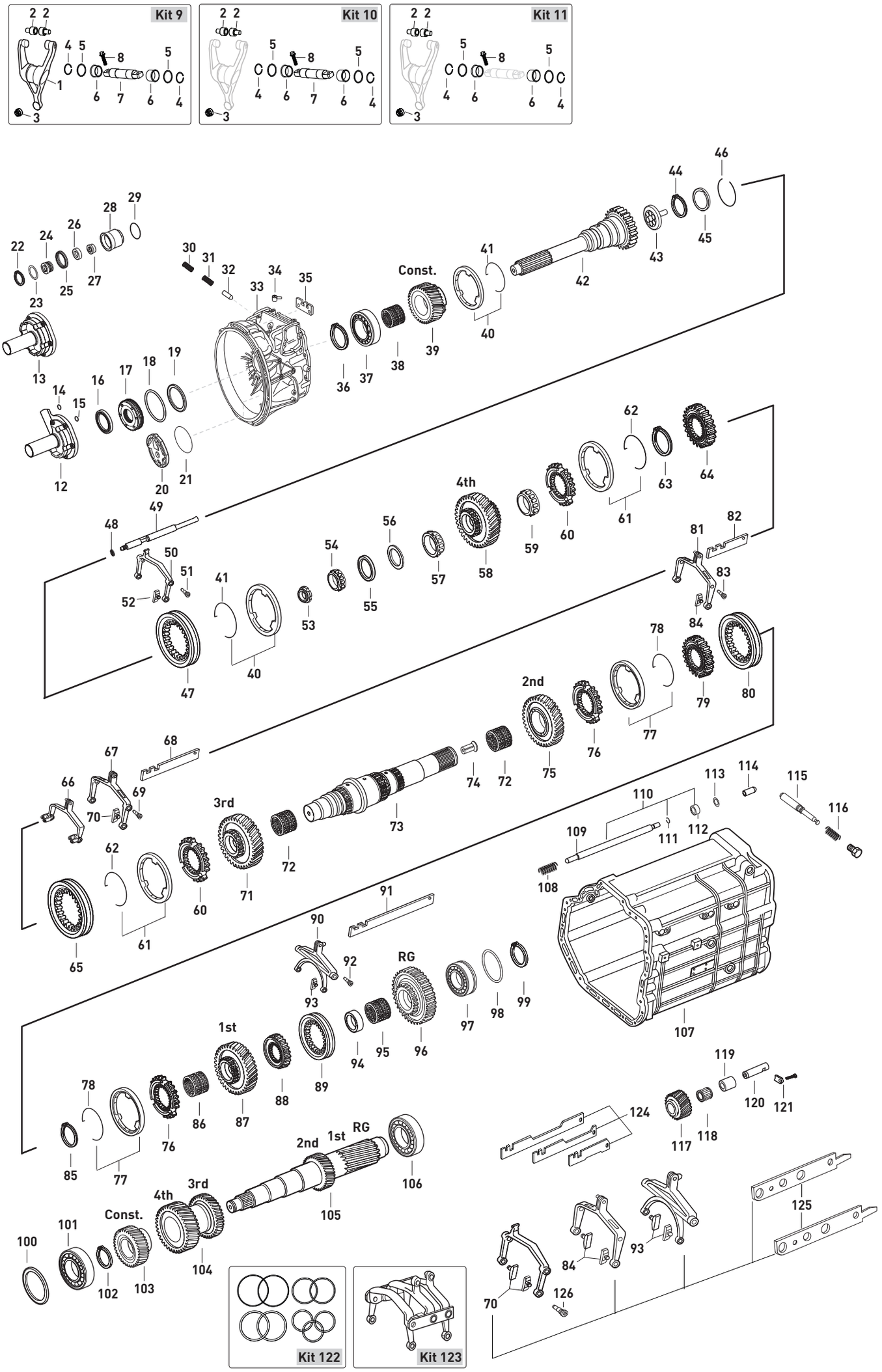






Original parts names, oem numbers, symbols and descriptions used in this catalogue are for reference purposes only.

| Fig. | Kacmaz No | Oem No | Oem Old No | Pcs. | Ürün Tanımı | Description | Sizes | Not | 715540 | 715528 | | |
|---|---|---|---|---|---|---|---|---|---|---|---|---|
| 42 | K21.03047 | 389 262 8301 | (945 262 0303) | 1 | PRİZDİREK 60 DİŞ | INPUT SHAFT 60 T. | | | ♦ | ♦ | | |
| | | | (389 262 6301) | | | | | | | | | |
| 42 | K21.03454 | 945 262 4603 | | 1 | PRİZDİREK 60 DİŞ | INPUT SHAFT 60 T. | | (PTO) | ♦ | | | |
| 42 | K21.03231 | 945 262 6203 | (945 262 1103) | 1 | PRİZDİREK 60 DİŞ | INPUT SHAFT 60 T. | | (PTO) | ♦ | | | |
| 42 | K21.03219 | 945 262 4403 | (945 262 1001) | 1 | PRİZDİREK 60 DİŞ | INPUT SHAFT 60 T. | | (WSK) | ♦ | | | |
| | | | (945 262 0703) | | | | | | | | | |
| | | | (389 262 0003) | | | | | | | | | |
| | | | (389 262 5601) | | | | | | | | | |
| 43 | K21.04001 | 976 269 0034 | (960 269 0434) | 1 | PRİZDİREK YAĞ PİPETİ | OIL COLLECTOR | | | ♦ | ♦ | | |
| 44 | K21.04002 | 000 994 9841 | | 1 | PRİZDİREK YAĞ PİPET SEKMANI | RETAINING RING | | | ♦ | ♦ | | |
| 45 | K21.03510 | 001 262 0362 | (000 262 8762) | 1 | PRİZDİREK ARKA KEÇE | OIL SEAL | 78,5X105X7mm | | ♦ | ♦ | | |
| | | | (000 262 9162) | | | | | | | | | |
| 46 | K21.04146 | 389 262 0973 | (945 262 0073) | 1 | PRİZDİREK KEÇE SEKMANI | LOCK RING | | | ♦ | | | |
| 47 | K21.03002 | 945 262 2823 | (945 262 0323) | 1 | TAKVİYE HALKA | ENGAGING SLEEVE | | (1)(3) | ♦ | | | |
| | | | (945 262 0623) | | | | | | | | | |
| | | | (389 262 4123) | | | | | | | | | |
| | | | (389 262 2723) | | | | | | | | | |
| 47 | K21.03137 | 945 262 6823 | (945 262 6423) | 1 | TAKVİYE HALKA | ENGAGING SLEEVE | | (2) | ♦ | ♦ | | |
| 48 | K21.04160 | 387 263 2652 | | 1 | TAKVİYE HİLAL MİL PULU | SPACER WASHER | 0,20mm | | ♦ | ♦ | | |
| 48 | K21.04161 | 387 263 2752 | | 1 | TAKVİYE HİLAL MİL PULU | SPACER WASHER | 0,40mm | | ♦ | ♦ | | |
| 48 | | 387 263 2852 | | 1 | TAKVİYE HİLAL MİL PULU | SPACER WASHER | 0,60mm | | ♦ | ♦ | | |
| 48 | | 387 263 3052 | | 1 | TAKVİYE HİLAL MİL PULU | SPACER WASHER | 1,00mm | | ♦ | ♦ | | |
| 49 | K21.07003 | 945 267 0017 | | 1 | TAKVİYE HİLAL MİLİ | GEAR SHIFT RAIL | | | ♦ | ♦ | | |
| 49 | | 945 267 0617 | | 1 | TAKVİYE HİLAL MİLİ | GEAR SHIFT RAIL | | | ♦ | | | |
| 49 | | 945 267 0117 | | 1 | TAKVİYE HİLAL MİLİ | GEAR SHIFT RAIL | | | ♦ | | | |
| 50 | K21.06410 | 945 265 0001 | | 1 | TAKVİYE HİLALİ | GEAR SHIFT FORK | | | ♦ | ♦ | | |
| 51 | K21.04307 | 960 265 0774 | (945 265 1274) | 2 | HİLAL CİVATASI | PIN | | | ♦ | | | |
| | | | (945 265 2974) | | | | | | | | | |
| | | | (945 265 2774) | | | | | | | | | |
| 52 | K21.03431 | 960 265 0049 | (947 265 0349) | 2 | TAKVİYE HİLAL PABUCU | SLIDING PAD | | | ♦ | ♦ | | |
| | | | (389 265 2749) | | | | | | | | | |
| 53 | K21.03432 | 945 990 0250 | (945 990 0150) | 1 | KAMALI MİL SOMUNU | NUT | M30X1,5 | | ♦ | ♦ | | |
| 54 | K21.03619 | 015 981 1605 | (013 981 1105) | 1 | KAMALI MİL UÇ BİLYA | ROLLER BEARING | 39,69X40,39mm | | ♦ | ♦ | | |
| 55 | K21.04024 | 389 262 3352 | | 1 | 4.VİTES ÖN BİLYA AYAR PULU | THRUST WASHER | 2,50mm | | ♦ | ♦ | | |
| 55 | K21.04025 | 389 262 3252 | | 1 | 4.VİTES ÖN BİLYA AYAR PULU | THRUST WASHER | 2,00mm | | ♦ | ♦ | | |
| 55 | K21.04026 | 389 262 3152 | | 1 | 4.VİTES ÖN BİLYA AYAR PULU | THRUST WASHER | 1,95mm | | ♦ | ♦ | | |
| 55 | K21.04027 | 389 262 3052 | | 1 | 4.VİTES ÖN BİLYA AYAR PULU | THRUST WASHER | 1,90mm | | ♦ | ♦ | | |
| 55 | K21.04028 | 389 262 2952 | | 1 | 4.VİTES ÖN BİLYA AYAR PULU | THRUST WASHER | 1,85mm | | ♦ | ♦ | | |
| 55 | K21.04092 | 389 262 2455 | | 1 | 4.VİTES ÖN BİLYA AYAR PULU | THRUST WASHER | 1,82mm | | ♦ | ♦ | | |
| 55 | K21.04093 | 389 262 2355 | | 1 | 4.VİTES ÖN BİLYA AYAR PULU | THRUST WASHER | 1,79mm | | ♦ | ♦ | | |
| 55 | K21.04094 | 389 262 2255 | | 1 | 4.VİTES ÖN BİLYA AYAR PULU | THRUST WASHER | 1,76mm | | ♦ | ♦ | | |
| 55 | K21.04095 | 389 262 2155 | | 1 | 4.VİTES ÖN BİLYA AYAR PULU | THRUST WASHER | 1,73mm | | ♦ | ♦ | | |
| 55 | K21.04096 | 389 262 2055 | | 1 | 4.VİTES ÖN BİLYA AYAR PULU | THRUST WASHER | 1,67mm | | ♦ | ♦ | | |
| 55 | K21.04097 | 389 262 1955 | | 1 | 4.VİTES ÖN BİLYA AYAR PULU | THRUST WASHER | 1,64mm | | ♦ | ♦ | | |
| 55 | K21.04098 | 389 262 1855 | | 1 | 4.VİTES ÖN BİLYA AYAR PULU | THRUST WASHER | 1,61mm | | ♦ | ♦ | | |
| 55 | K21.04099 | 389 262 1755 | | 1 | 4.VİTES ÖN BİLYA AYAR PULU | THRUST WASHER | 1,58mm | | ♦ | ♦ | | |
| 55 | K21.04100 | 389 262 2352 | | 1 | 4.VİTES ÖN BİLYA AYAR PULU | THRUST WASHER | 1,55mm | | ♦ | ♦ | | |
| 55 | K21.04101 | 389 262 1655 | | 1 | 4.VİTES ÖN BİLYA AYAR PULU | THRUST WASHER | 1,52mm | | ♦ | ♦ | | |
| 55 | K21.04102 | 389 262 1555 | | 1 | 4.VİTES ÖN BİLYA AYAR PULU | THRUST WASHER | 1,49mm | | ♦ | ♦ | | |
| 55 | K21.04103 | 389 262 1455 | | 1 | 4.VİTES ÖN BİLYA AYAR PULU | THRUST WASHER | 1,46mm | | ♦ | ♦ | | |
| 55 | K21.04104 | 389 262 1355 | | 1 | 4.VİTES ÖN BİLYA AYAR PULU | THRUST WASHER | 1,43mm | | ♦ | ♦ | | |
| 55 | K21.04105 | 389 262 2052 | | 1 | 4.VİTES ÖN BİLYA AYAR PULU | THRUST WASHER | 1,40mm | | ♦ | ♦ | | |
| 55 | K21.04106 | 389 262 1952 | | 1 | 4.VİTES ÖN BİLYA AYAR PULU | THRUST WASHER | 1,35mm | | ♦ | ♦ | | |

NOTES :
Parts encoded alphabetic and numaric are used together.

NOTLAR :
Alfabetik ve rakam ile kodlanan parçalar birlikte kullanılır.





Original parts names, oem numbers, symbols and descriptions used in this catalogue are for reference purposes only.

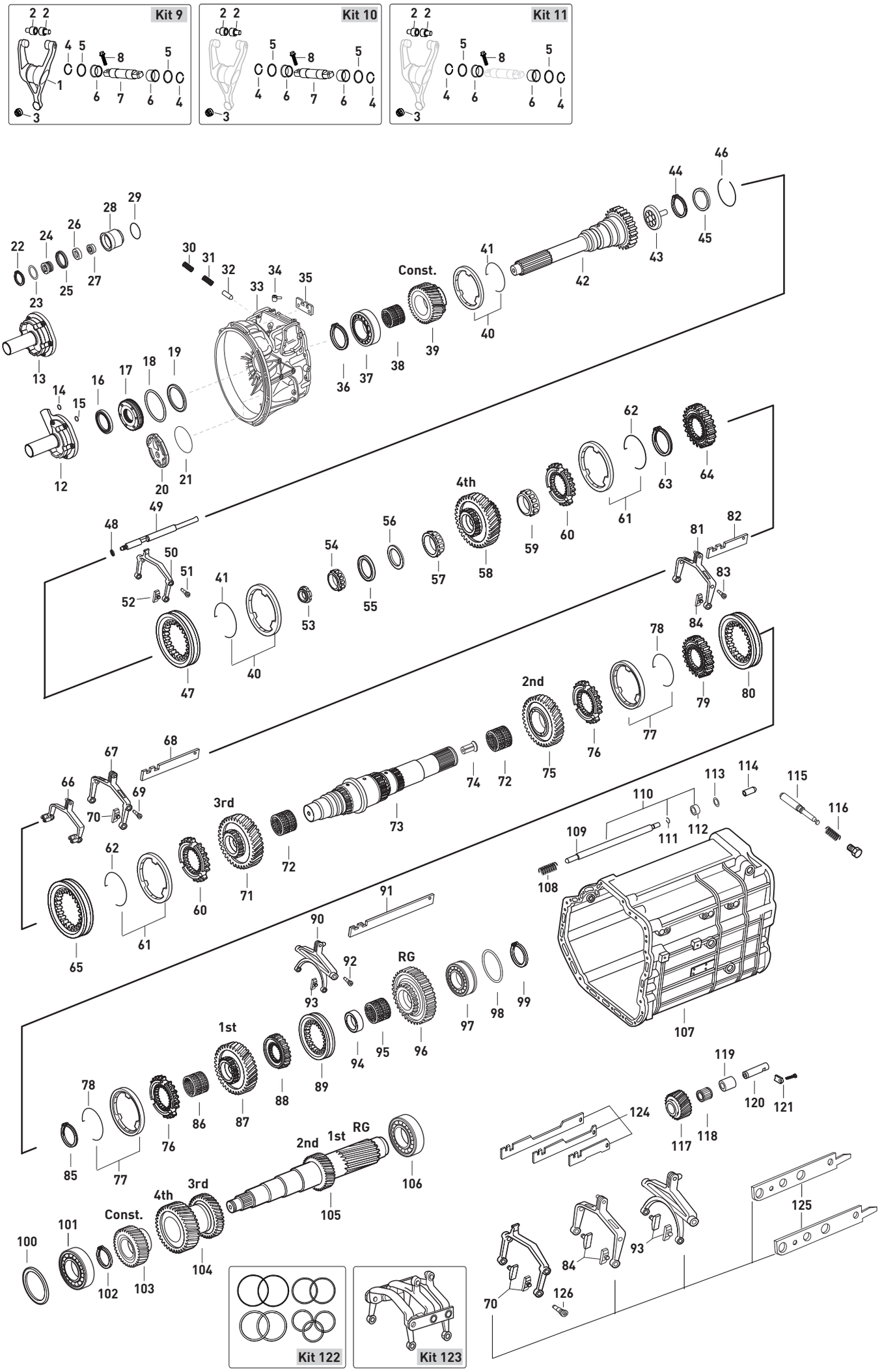






Original parts names, oem numbers, symbols and descriptions used in this catalogue are for reference purposes only.

| Fig. | Kacmaz No | Oem No | Oem Old No | Pcs. | Ürün Tanımı | Description | Sizes | Not | 715540 | 715528 | | |
|---|---|---|---|---|---|---|---|---|---|---|---|---|
| 55 | K21.04107 | 389 262 2754 | | 1 | 4.VİTES ÖN BİLYA AYAR PULU | THRUST WASHER | 1,30mm | | ♦ | ♦ | | |
| 55 | K21.04108 | 389 262 3654 | | 1 | 4.VİTES ÖN BİLYA AYAR PULU | THRUST WASHER | 1,25mm | | ♦ | ♦ | | |
| 55 | K21.04109 | 389 262 3554 | | 1 | 4.VİTES ÖN BİLYA AYAR PULU | THRUST WASHER | 1,20mm | | ♦ | ♦ | | |
| 55 | K21.04110 | 389 262 3454 | | 1 | 4.VİTES ÖN BİLYA AYAR PULU | THRUST WASHER | 1,15mm | | ♦ | ♦ | | |
| 55 | K21.04111 | 389 262 3354 | | 1 | 4.VİTES ÖN BİLYA AYAR PULU | THRUST WASHER | 1,10mm | | ♦ | ♦ | | |
| 55 | K21.04112 | 389 262 3254 | | 1 | 4.VİTES ÖN BİLYA AYAR PULU | THRUST WASHER | 1,05mm | | ♦ | ♦ | | |
| 55 | K21.04113 | 389 262 2854 | | 1 | 4.VİTES ÖN BİLYA AYAR PULU | THRUST WASHER | 0,50mm | | ♦ | ♦ | | |
| 55 | K21.94113 | | | 1 | 4.VİTES ÖN BİLYA AYAR PULU | THRUST WASHER | 0,40mm | | ♦ | ♦ | | |
| 55 | K21.84113 | | | 1 | 4.VİTES ÖN BİLYA AYAR PULU | THRUST WASHER | 0,30mm | | ♦ | ♦ | | |
| 55 | K21.74113 | | | 1 | 4.VİTES ÖN BİLYA AYAR PULU | THRUST WASHER | 0,20mm | | ♦ | ♦ | | |
| 55 | K21.64113 | | | 1 | 4.VİTES ÖN BİLYA AYAR PULU | THRUST WASHER | 0,10mm | | ♦ | ♦ | | |
| 56 | K21.04010 | 389 262 2351 | | 1 | 4.VİTES ÖN BİLYA AYAR PULU | THRUST WASHER | 7,00mm | | ♦ | | | |
| 57 | K21.03620 | 017 981 5105 | (015 981 6105) | 1 | 4.VİTES DİŞLİSİ ÖN BİLYA | ROLLER BEARING | 50X41,3mm | | ♦ | ♦ | | |
| | | | (014 981 2605) | | | | | | | | | |
| 57 | K21.03621 | 012 981 9905 | (012 981 0505) | 1 | 4.VİTES DİŞLİSİ ÖN BİLYA | ROLLER BEARING | 50X36mm | | ♦ | | | |
| 58 | K21.03221 | 389 262 7910 | (945 262 2810) | 1 | 4.VİTES DİŞLİSİ 36 DİŞ | GEAR 4th 36 T. | | (1) | ♦ | | | |
| 58 | K21.03220 | 945 262 9517 | (945 262 5617) | 1 | 4.VİTES DİŞLİSİ 36 DİŞ | GEAR 4th 36 T. | | (2) | ♦ | ♦ | | |
| 59 | K21.03622 | 015 981 6205 | (015 981 8105) | 1 | 4.VİTES DİŞLİSİ ARKA BİLYA | ROLLER BEARING | 55X29,8mm | | ♦ | | | |
| 60 | K21.03027 | 945 262 0534 | (389 262 5034) | 2 | 3./4.VİTES SENKROMENÇ | ENGAGING RING | | (1) | ♦ | | | |
| 60 | K21.03146 | 945 262 8234 | (945 262 5434) | 2 | 3./4.VİTES SENKROMENÇ | ENGAGING RING | | (2) | ♦ | ♦ | | |
| 61 | K21.03016 | 389 262 0737 | (387 262 0937) | 2 | 3./4.VİTES FRENLEME (Mo) | SYNCHRONIZING CONE / Mo | | (1) | ♦ | | | |
| | | | (389 262 1137) | | | | | | | | | |
| 61 | K21.06041 | 945 260 0650 | | 2 | 3./4.VİTES FRENLEME (C) | SYNCHRONIZING CONE / C | | (1) | ♦ | | | |
| 61 | K21.03148 | 947 260 1945 | (947 260 4645) | 2 | 3./4.VİTES FRENLEME (Mo) | SYNCHRONIZING CONE / Mo | | (2) | ♦ | ♦ | | |
| | | | (946 262 6137) | | | | | | | | | |
| 61 | K21.06299 | 947 260 3545 | (947 260 5145) | 2 | 3./4.VİTES FRENLEME (C) | SYNCHRONIZING CONE / C | | (2) | ♦ | ♦ | | |
| | | | (947 260 2945) | | | | | | | | | |
| 62 | K21.03055 | 387 262 0893 | (387 262 0793) | 2 | FRENLEME TELİ | SPRING | | | ♦ | ♦ | | |
| 63 | K21.04343 | 387 262 2073 | | 1 | 3./4.VİTES YILDIZ DİŞLİ SEKMANI | RETAINING RING | 2,40mm | | ♦ | ♦ | | |
| 63 | K21.06687 | 387 262 2173 | | 1 | 3./4.VİTES YILDIZ DİŞLİ SEKMANI | RETAINING RING | 2,45mm | | ♦ | ♦ | | |
| 63 | K21.04342 | 007 994 0041 | (387 262 2273) | 1 | 3./4.VİTES YILDIZ DİŞLİ SEKMANI | RETAINING RING | 2,50mm | | ♦ | ♦ | | |
| 63 | K21.04359 | 387 262 2373 | | 1 | 3./4.VİTES YILDIZ DİŞLİ SEKMANI | RETAINING RING | 2,55mm | | ♦ | ♦ | | |
| 63 | K21.04345 | 387 262 2473 | | 1 | 3./4.VİTES YILDIZ DİŞLİ SEKMANI | RETAINING RING | 2,60mm | | ♦ | ♦ | | |
| 63 | K21.07021 | 387 262 2573 | | 1 | 3./4.VİTES YILDIZ DİŞLİ SEKMANI | RETAINING RING | 2,65mm | | ♦ | ♦ | | |
| 63 | K21.04344 | 387 262 7973 | | 1 | 3./4.VİTES YILDIZ DİŞLİ SEKMANI | RETAINING RING | 2,70mm | | ♦ | ♦ | | |
| 63 | K21.07022 | 387 262 8073 | | 1 | 3./4.VİTES YILDIZ DİŞLİ SEKMANI | RETAINING RING | 2,75mm | | ♦ | ♦ | | |
| 63 | K21.06588 | 387 262 8173 | | 1 | 3./4.VİTES YILDIZ DİŞLİ SEKMANI | RETAINING RING | 2,80mm | | ♦ | ♦ | | |
| 64 | K21.03149 | 389 262 4735 | (389 262 4635) | 1 | 3./4.VİTES YILDIZ DİŞLİ | SYNCHRONIZER HUB | | | ♦ | ♦ | | |
| 65 | K21.03009 | 945 262 2723 | (945 262 0423) | 1 | 3./4.VİTES HALKA | ENGAGING SLEEVE | | (1) | ♦ | | | |
| | | | (389 262 2623) | | | | | | | | | |
| 65 | K21.03151 | 945 262 6523 | (930 262 0523) | 1 | 3./4.VİTES HALKA | ENGAGING SLEEVE | | (2) | ♦ | ♦ | | |
| 66 | K21.06428 | 945 260 0830 | | 1 | 3./4.VİTES HİLAL ARA PARÇA | SHIFTING FORK | | | ♦ | | | |
| 66 | | 945 260 4230 | | 1 | 3./4.VİTES HİLAL ARA PARÇA | SHIFTING FORK | | | | ♦ | | |
| 67 | K21.06256 | 945 265 0402 | (945 265 3002) | 1 | 3./4.VİTES HİLALİ | GEAR SHIT FORK | | | ♦ | | | |
| 68 | K21.06576 | 945 265 0504 | | 1 | 3./4.VİTES HİLAL ÇITASI | SHIFTING ROD 3rd/4th | | | ♦ | | | |
| 68 | | 945 265 3204 | (945 265 0404) | 1 | 3./4.VİTES HİLAL ÇITASI | SHIFTING ROD 3rd/4th | | | ♦ | | | |
| 69 | K21.04308 | 960 265 0874 | (945 265 1374) | 2 | HİLAL CİVATASI | PIN | | | ♦ | | | |
| | | | (960 265 0674) | | | | | | | | | |
| 70 | K21.03431 | 960 265 0049 | (947 265 0349) | 2 | 3./4.VİTES HİLAL PABUCU | SLIDING PAD | | | ♦ | ♦ | | |
| | | | (389 265 2749) | | | | | | | | | |
| 71 | K21.03223 | 389 262 3713 | (945 262 3913) | 1 | 3.VİTES DİŞLİSİ 29 DİŞ | GEAR 3rd 29 T. | | | ♦ | ♦ | | |
| | | | (389 262 3013) | | | | | | | | | |
| 72 | K21.03810 | 018 981 6610 | (010 981 5310) | 2 | 2./3.VİTES MASURA BİLYA | NEEDLE CAGE | 85X93X53mm | | ♦ | ♦ | | |

NOTES :
Parts encoded alphabetic and numaric are used together.

NOTLAR :
Alfabetik ve rakam ile kodlanan parçalar birlikte kullanılır.





Original parts names, oem numbers, symbols and descriptions used in this catalogue are for reference purposes only.

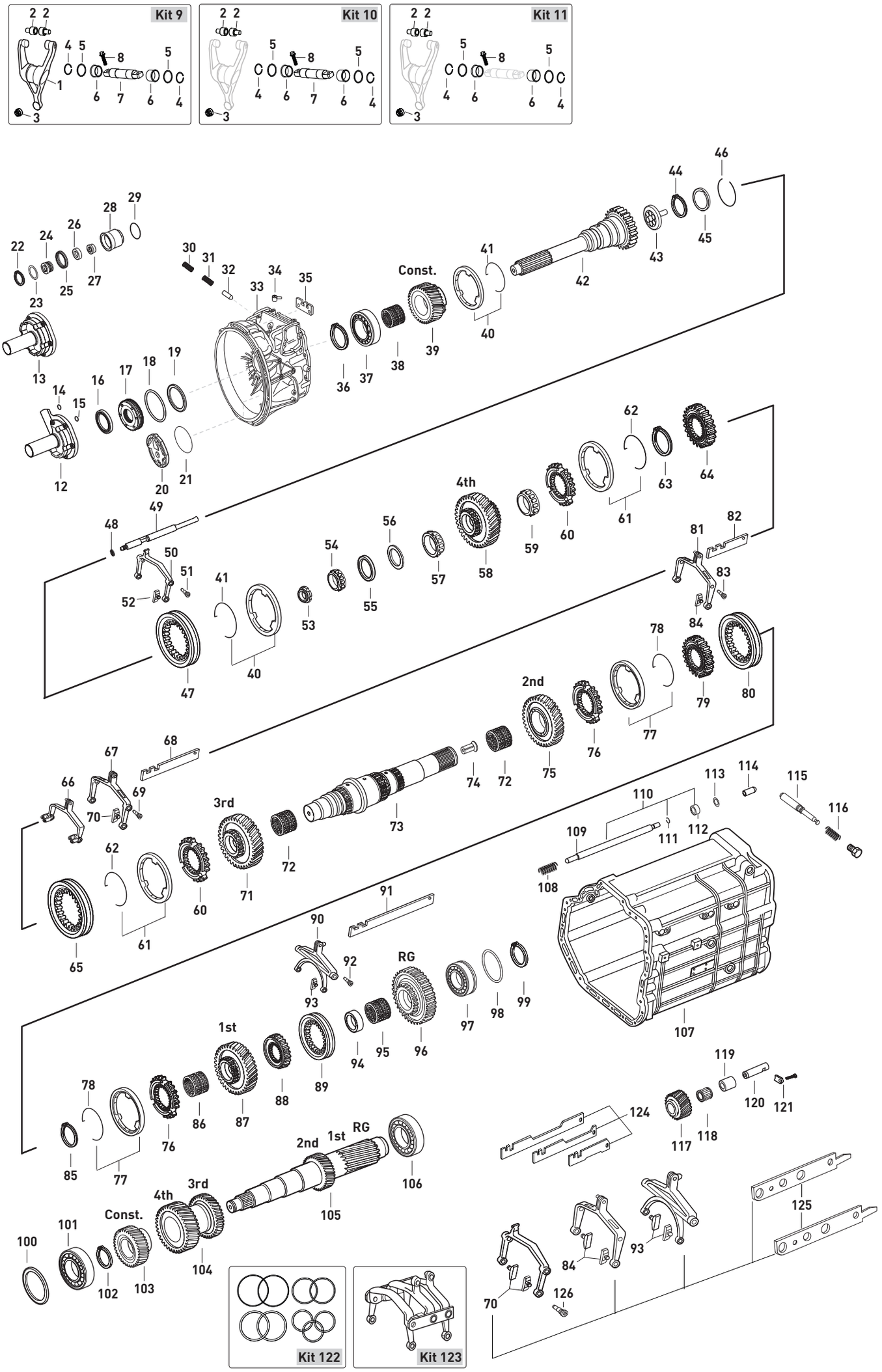






Original parts names, oem numbers, symbols and descriptions used in this catalogue are for reference purposes only.

| Fig. | Kacmaz No | Oem No | Oem Old No | Pcs. | Ürün Tanımı | Description | Sizes | Not | 715540 | 715528 | | |
|---|---|---|---|---|---|---|---|---|---|---|---|---|
| 73 | K21.03156 | 945 262 4505 | | 1 | KAMALI MİL | MAIN SHAFT | | (3) | ♦ | | | |
| 73 | K21.03029 | 945 262 3605 | (945 262 3505) | 1 | KAMALI MİL | MAIN SHAFT | | (4) | ♦ | | | |
| 73 | K21.06042 | 930 262 1205 | (930 262 2405) | 1 | KAMALI MİL | MAIN SHAFT | | (5) | ♦ | | | |
| 73 | K21.06503 | 960 262 0205 | | 1 | KAMALI MİL | MAIN SHAFT | | (6) | | ♦ | | |
| 74 | K21.04364 | 001 990 2759 | | 1 | KAMALI MİL YAĞ BORUSU | OIL PIPE | | (5)(6) | ♦ | ♦ | | |
| 75 | K21.03158 | 389 262 2812 | (389 262 2512) | 1 | 2.VİTES DİŞLİSİ 39 DİŞ | GEAR 2nd 39 T. | | | ♦ | ♦ | | |
| | | | (389 262 3712) | | | | | | | | | |
| | | | (945 262 3112) | | | | | | | | | |
| 76 | K21.03025 | 945 262 0434 | (389 262 0034) | 2 | 1./2. VİTES SENKROMENÇ | ENGAGING RING | | (1) | ♦ | | | |
| 76 | K21.03160 | 945 262 5534 | | 2 | 1./2. VİTES SENKROMENÇ | ENGAGING RING | | (2) | ♦ | ♦ | | |
| 77 | K21.03016 | 389 262 0737 | (387 262 0937) | 2 | 1./2. VİTES FRENLEME (Mo) | SYNCHRONIZING CONE / Mo | | (1) | ♦ | | | |
| | | | (389 262 1137) | | | | | | | | | |
| 77 | K21.06041 | 945 260 0650 | | 2 | 1./2.VİTES FRENLEME (C) | SYNCHRONIZING CONE / C | | (1) | ♦ | | | |
| 77 | K21.03148 | 947 260 1945 | (947 260 4645) | 2 | 1./2.VİTES FRENLEME (Mo) | SYNCHRONIZING CONE / Mo | | (2) | ♦ | ♦ | | |
| | | | (946 262 6137) | | | | | | | | | |
| 77 | K21.06299 | 947 260 3545 | (947 260 5145) | 2 | 1./2.VİTES FRENLEME (C) | SYNCHRONIZING CONE / C | | (2) | ♦ | ♦ | | |
| | | | (947 260 2945) | | | | | | | | | |
| 78 | K21.03055 | 387 262 0893 | (387 262 0793) | 2 | FRENLEME TELİ | SPRING | | | ♦ | ♦ | | |
| 79 | K21.03161 | 389 262 2535 | (945 262 0135) | 1 | 1./2.VİTES YILDIZ DİŞLİ | SYNCHRONIZER HUB | | | ♦ | ♦ | | |
| 80 | K21.03009 | 945 262 2723 | (945 262 0423) | 1 | 1./2.VİTES HALKA | ENGAGING SLEEVE | | (1) | ♦ | | | |
| | | | (389 262 2623) | | | | | | | | | |
| 80 | K21.03151 | 945 262 6523 | (930 262 0523) | 1 | 1./2.VİTES HALKA | ENGAGING SLEEVE | | (2) | ♦ | ♦ | | |
| 81 | K21.06258 | 945 260 0230 | (945 260 0330) | 1 | 1./2.VİTES HİLALİ | SHIFTING FORK 1st/2nd | | | ♦ | | | |
| | | | (945 265 0301) | | | | | | | | | |
| 82 | K21.06702 | 945 265 2704 | (945 265 0304) | 1 | 1./2.VİTES HİLAL ÇITASI | SHIFTING ROD 1st/2nd | | | ♦ | | | |
| 82 | | 945 265 1904 | | 1 | 1./2.VİTES HİLAL ÇITASI | SHIFTING ROD 1st/2nd | | | ♦ | | | |
| 83 | K21.04307 | 960 265 0774 | (945 265 1274) | 2 | HİLAL CİVATASI | PIN | | | ♦ | | | |
| | | | (945 265 2974) | | | | | | | | | |
| | | | (945 265 2774) | | | | | | | | | |
| 84 | K21.03431 | 960 265 0049 | (947 265 0349) | 2 | 3./ 4.VİTES HİLAL PABUCU | SLIDING PAD | | | ♦ | ♦ | | |
| | | | (389 265 2749) | | | | | | | | | |
| 85 | K21.04343 | 387 262 2073 | | 1 | 1./2.VİTES YILDIZ DİŞLİ SEKMANI | RETAINING RING | 2,40mm | | ♦ | ♦ | | |
| 85 | K21.06687 | 387 262 2173 | | 1 | 1./2.VİTES YILDIZ DİŞLİ SEKMANI | RETAINING RING | 2,45mm | | ♦ | ♦ | | |
| 85 | K21.04342 | 007 994 0041 | (387 262 2273) | 1 | 1./2.VİTES YILDIZ DİŞLİ SEKMANI | RETAINING RING | 2,50mm | | ♦ | ♦ | | |
| 85 | K21.04359 | 387 262 2373 | | 1 | 1./2.VİTES YILDIZ DİŞLİ SEKMANI | RETAINING RING | 2,55mm | | ♦ | ♦ | | |
| 85 | K21.04345 | 387 262 2473 | | 1 | 1./2.VİTES YILDIZ DİŞLİ SEKMANI | RETAINING RING | 2,60mm | | ♦ | ♦ | | |
| 85 | K21.07021 | 387 262 2573 | | 1 | 1./2.VİTES YILDIZ DİŞLİ SEKMANI | RETAINING RING | 2,65mm | | ♦ | ♦ | | |
| 85 | K21.04344 | 387 262 7973 | | 1 | 1./2.VİTES YILDIZ DİŞLİ SEKMANI | RETAINING RING | 2,70mm | | ♦ | ♦ | | |
| 85 | K21.07022 | 387 262 8073 | | 1 | 1./2.VİTES YILDIZ DİŞLİ SEKMANI | RETAINING RING | 2,75mm | | ♦ | ♦ | | |
| 85 | K21.06588 | 387 262 8173 | | 1 | 1./2.VİTES YILDIZ DİŞLİ SEKMANI | RETAINING RING | 2,80mm | | ♦ | ♦ | | |
| 86 | K21.03839 | 945 981 0010 | (018 981 8110) | 1 | 1.VİTES MASURA BİLYA | NEEDLE CAGE | 75X83X48mm | | ♦ | ♦ | | |
| | | | (018 981 7610) | | | | | | | | | |
| 86 | K21.03817 | 019 981 4410 | (007 981 4210) | 1 | 1.VİTES MASURA BİLYA | NEEDLE CAGE | 75X83X55mm | | ♦ | | | |
| | | | (008 981 8310) | | | | | | | | | |
| | | | (009 981 0010) | | | | | | | | | |
| | | | (012 981 9210) | | | | | | | | | |
| 87 | K21.03162 | 946 262 0811 | (389 262 2711) | 1 | 1.VİTES DİŞLİSİ 44 DİŞ | GEAR 1st 44 T. | | | ♦ | ♦ | | |
| | | | (946 262 0911) | | | | | | | | | |
| | | | (945 262 3111) | | | | | | | | | |
| | | | (389 262 2011) | | | | | | | | | |
| | | | (945 262 0811) | | | | | | | | | |
| 87 | | 945 262 8911 | (945 262 3711) | 1 | 1.VİTES DİŞLİSİ 44 DİŞ | GEAR 1st 44 T | | | ♦ | | | |
| 88 | K21.06995 | 945 262 3935 | | 1 | GERİ VİTES YILDIZ DİŞLİ | SYNCHRONIZER HUB | | (B) | ♦ | | | |

NOTES :
Parts encoded alphabetic and numaric are used together.

NOTLAR :
Alfabetik ve rakam ile kodlanan parçalar birlikte kullanılır.





Original parts names, oem numbers, symbols and descriptions used in this catalogue are for reference purposes only.

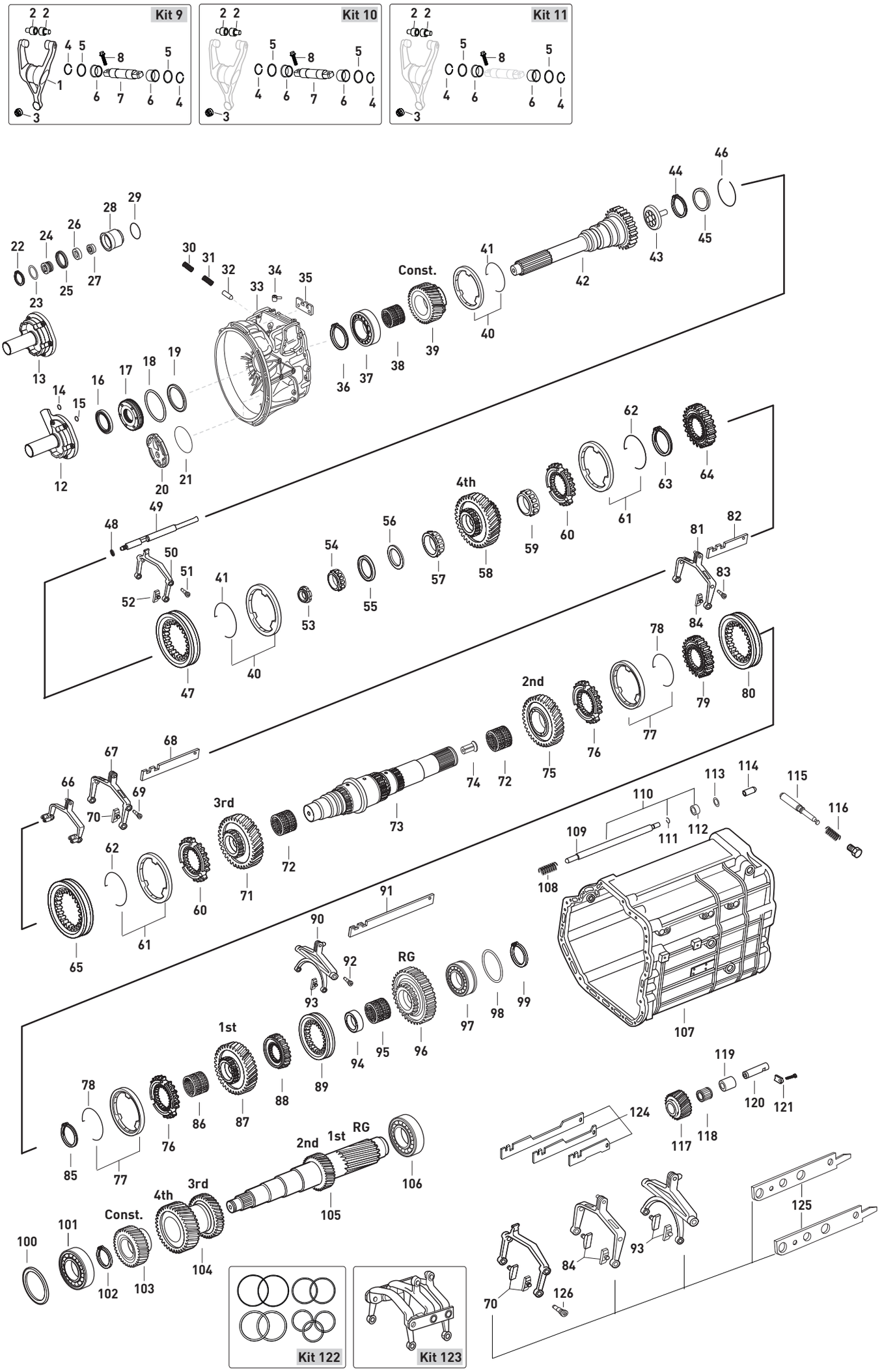






Original parts names, oem numbers, symbols and descriptions used in this catalogue are for reference purposes only.

| Fig. | Kacmaz No | Oem No | Oem Old No | Pcs. | Ürün Tanımı | Description | Sizes | Not | 715540 | 715528 | | |
|---|---|---|---|---|---|---|---|---|---|---|---|---|
| 88 | K21.03163 | 945 262 3835 | | 1 | GERİ VİTES YILDIZ DİŞLİ | SYNCHRONIZER HUB | | (D) | ♦ | | | |
| 88 | K21.03059 | 389 262 0135 | | 1 | GERİ VİTES YILDIZ DİŞLİ | SYNCHRONIZER HUB | | (A)(C) | ♦ | ♦ | | |
| 88 | K21.03164 | 389 262 3935 | | 1 | GERİ VİTES YILDIZ DİŞLİ | SYNCHRONIZER HUB | | (E) | ♦ | | | |
| 89 | K21.03060 | 389 262 1723 | (389 262 0023) | 1 | GERİ VİTES HALKASI | ENGAGING SLEEVE | | (A)(C) | ♦ | ♦ | | |
| 89 | K21.03061 | 389 262 1823 | (389 262 0923) | 1 | GERİ VİTES HALKASI | ENGAGING SLEEVE | | (B)(D)(E) | ♦ | | | |
| 90 | K21.06259 | 945 260 0430 | (945 265 0003) | 1 | GERİ VİTES HİLALİ | SHIFTING FORK RG | | | ♦ | | | |
| 91 | | 945 265 1104 | (945 265 0204) | 1 | GERİ VİTES HİLAL ÇITASI | SHIFTING ROD | | | ♦ | | | |
| 91 | | 945 265 1004 | | 1 | GERİ VİTES HİLAL ÇITASI | SHIFTING ROD | | | ♦ | | | |
| 92 | K21.04307 | 960 265 0774 | (945 265 1274) | 2 | HİLAL CİVATASI | PIN | | | ♦ | | | |
| | | | (945 265 2974) | | | | | | | | | |
| | | | (945 265 2774) | | | | | | | | | |
| 93 | K21.03410 | 947 265 0249 | (945 265 0149) | 2 | GERİ VİTES HİLAL PABUCU | SLIDING PAD | | | ♦ | ♦ | | |
| 94 | K21.03065 | 389 262 0150 | | 1 | GERİ VİTES MASURA BİLYA ÇANAĞI | BEARING RACE | | (A)(B)(5)(6) | ♦ | ♦ | | |
| 94 | K21.03112 | 389 262 2550 | (389 262 1650) | 1 | GERİ VİTES MASURA BİLYA ÇANAĞI | BEARING RACE | | (C)(D)(E)(3)(4) | ♦ | | | |
| | | | (389 262 0050) | | | | | | | | | |
| 95 | K21.03813 | 013 981 1810 | (013 981 2610) | 1 | GERİ VİTES MASURA BİLYA | NEEDLE CAGE | 78X86X33mm | (A)(B)(5)(6) | ♦ | ♦ | | |
| 95 | K21.03803 | 009 981 1510 | (017 981 7810) | 1 | GERİ VİTES MASURA BİLYA | NEEDLE CAGE | 78X86X35mm | (C)(D)(E)(3)(4) | ♦ | | | |
| | | | (008 981 9310) | | | | | | | | | |
| 96 | K21.06045 | 930 262 0233 | | 1 | GERİ VİTES DİŞLİSİ 40 DİŞ | REVERSE GEAR 40 T. | | (A)(5)(6) | ♦ | ♦ | | |
| 96 | K21.06044 | 960 262 0033 | | 1 | GERİ VİTES DİŞLİSİ 40 DİŞ | REVERSE GEAR 40 T. | | (B)(5) | ♦ | | | |
| 96 | K21.03165 | 945 262 3233 | (389 262 2033) | 1 | GERİ VİTES DİŞLİSİ 40 DİŞ | REVERSE GEAR 40 T. | | (C)(3)(4) | ♦ | | | |
| 96 | K21.03167 | 945 262 4433 | | 1 | GERİ VİTES DİŞLİSİ 40 DİŞ | REVERSE GEAR 40 T. | | (D)(3)(4) | ♦ | | | |
| 96 | K21.03168 | 945 262 3333 | (389 262 2133) | 1 | GERİ VİTES DİŞLİSİ 40 DİŞ | REVERSE GEAR 40 T. | | (E)(3)(4) | ♦ | | | |
| 97 | K21.03661 | 002 981 8181 | | 1 | KAMALI MİL ARKA BİLYA | ROLLER BEARING | 60X130X35,2mm | (5)(6) | ♦ | ♦ | | |
| 97 | K21.03623 | 014 981 6105 | (016 981 1305) | 1 | KAMALI MİL ARKA BİLYA | ROLLER BEARING | 60X130X33,2mm | (3)(4) | ♦ | | | |
| | | | (014 981 7505) | | | | | | | | | |
| 98 | K21.04182 | 389 262 3552 | | 1 | KAMALI MİL ARKA BİLYA RAYNELİ | THRUST WASHER | 0,10mm | | ♦ | ♦ | | |
| 98 | K21.04184 | 389 262 3652 | | 1 | KAMALI MİL ARKA BİLYA RAYNELİ | THRUST WASHER | 0,15mm | | ♦ | ♦ | | |
| 98 | K21.04152 | 389 262 3752 | | 1 | KAMALI MİL ARKA BİLYA RAYNELİ | THRUST WASHER | 0,20mm | | ♦ | ♦ | | |
| 98 | K21.94152 | | | 1 | KAMALI MİL ARKA BİLYA RAYNELİ | THRUST WASHER | 0,30mm | | ♦ | ♦ | | |
| 98 | K21.04183 | 389 262 3852 | | 1 | KAMALI MİL ARKA BİLYA RAYNELİ | THRUST WASHER | 0,40mm | | ♦ | ♦ | | |
| 98 | K21.94183 | | | 1 | KAMALI MİL ARKA BİLYA RAYNELİ | THRUST WASHER | 0,50mm | | ♦ | ♦ | | |
| 98 | K21.84183 | | | 1 | KAMALI MİL ARKA BİLYA RAYNELİ | THRUST WASHER | 0,60mm | | ♦ | ♦ | | |
| 98 | K21.74183 | | | 1 | KAMALI MİL ARKA BİLYA RAYNELİ | THRUST WASHER | 0,70mm | | ♦ | ♦ | | |
| 98 | K21.04185 | 389 262 3952 | | 1 | KAMALI MİL ARKA BİLYA RAYNELİ | THRUST WASHER | 0,80mm | | ♦ | ♦ | | |
| 98 | K21.06718 | 010 990 8382 | | 1 | KAMALI MİL ARKA BİLYA RAYNELİ | THRUST WASHER | 1,00mm | | ♦ | ♦ | | |
| 99 | K21.04331 | 007 994 1841 | (006 994 9941) | 1 | KAMALI MİL ARKA BİLYA SEKMANI | RETAINING RING | 2,50mm | | ♦ | ♦ | | |
| 100 | K21.04192 | 406 337 0252 | | 1 | GRUP MİLİ ÖN BİLYA RAYNELİ | THRUST WASHER | 0,10mm | | ♦ | ♦ | | |
| 100 | K21.04150 | 406 337 0352 | | 1 | GRUP MİLİ ÖN BİLYA RAYNELİ | THRUST WASHER | 0,20mm | | ♦ | ♦ | | |
| 100 | K21.94150 | | | 1 | GRUP MİLİ ÖN BİLYA RAYNELİ | THRUST WASHER | 0,25mm | | ♦ | ♦ | | |
| 100 | K21.04338 | 406 337 0452 | | 1 | GRUP MİLİ ÖN BİLYA RAYNELİ | THRUST WASHER | 0,30mm | | ♦ | ♦ | | |
| 100 | K21.04196 | 389 263 5352 | (389 263 3252) | 1 | GRUP MİLİ ÖN BİLYA RAYNELİ | THRUST WASHER | 0,40mm | | ♦ | ♦ | | |
| 100 | K21.04194 | 389 263 3352 | | 1 | GRUP MİLİ ÖN BİLYA RAYNELİ | THRUST WASHER | 0,45mm | | ♦ | ♦ | | |
| 100 | K21.06719 | 389 263 5652 | | 1 | GRUP MİLİ ÖN BİLYA RAYNELİ | THRUST WASHER | 0,49mm | | ♦ | ♦ | | |
| 100 | K21.04197 | 389 263 5852 | (389 263 3552) | 1 | GRUP MİLİ ÖN BİLYA RAYNELİ | THRUST WASHER | 0,55mm | | ♦ | ♦ | | |
| 100 | K21.04340 | 389 263 6052 | | 1 | GRUP MİLİ ÖN BİLYA RAYNELİ | THRUST WASHER | 0,61mm | | ♦ | ♦ | | |
| 100 | K21.04198 | 389 263 6352 | (389 263 3852) | 1 | GRUP MİLİ ÖN BİLYA RAYNELİ | THRUST WASHER | 0,70mm | | ♦ | ♦ | | |
| 100 | K21.04154 | 389 263 3952 | | 1 | GRUP MİLİ ÖN BİLYA RAYNELİ | THRUST WASHER | 0,75mm | | ♦ | ♦ | | |
| 100 | K21.04199 | 389 263 6852 | | 1 | GRUP MİLİ ÖN BİLYA RAYNELİ | THRUST WASHER | 0,85mm | | ♦ | ♦ | | |
| 100 | K21.04200 | 389 263 7352 | | 1 | GRUP MİLİ ÖN BİLYA RAYNELİ | THRUST WASHER | 1,00mm | | ♦ | ♦ | | |
| 100 | K21.04201 | 389 263 7852 | | 1 | GRUP MİLİ ÖN BİLYA RAYNELİ | THRUST WASHER | 1,15mm | | ♦ | ♦ | | |
| 100 | K21.04202 | 389 263 8352 | | 1 | GRUP MİLİ ÖN BİLYA RAYNELİ | THRUST WASHER | 1,30mm | | ♦ | ♦ | | |
| 101 | K21.03606 | 015 981 9005 | (014 981 1405) | 1 | GRUP MİLİ ÖN BİLYA | ROLLER BEARING | 50,8X100X35mm | | ♦ | ♦ | | |

NOTES :
Parts encoded alphabetic and numaric are used together.

NOTLAR :
Alfabetik ve rakam ile kodlanan parçalar birlikte kullanılır.





Original parts names, oem numbers, symbols and descriptions used in this catalogue are for reference purposes only.

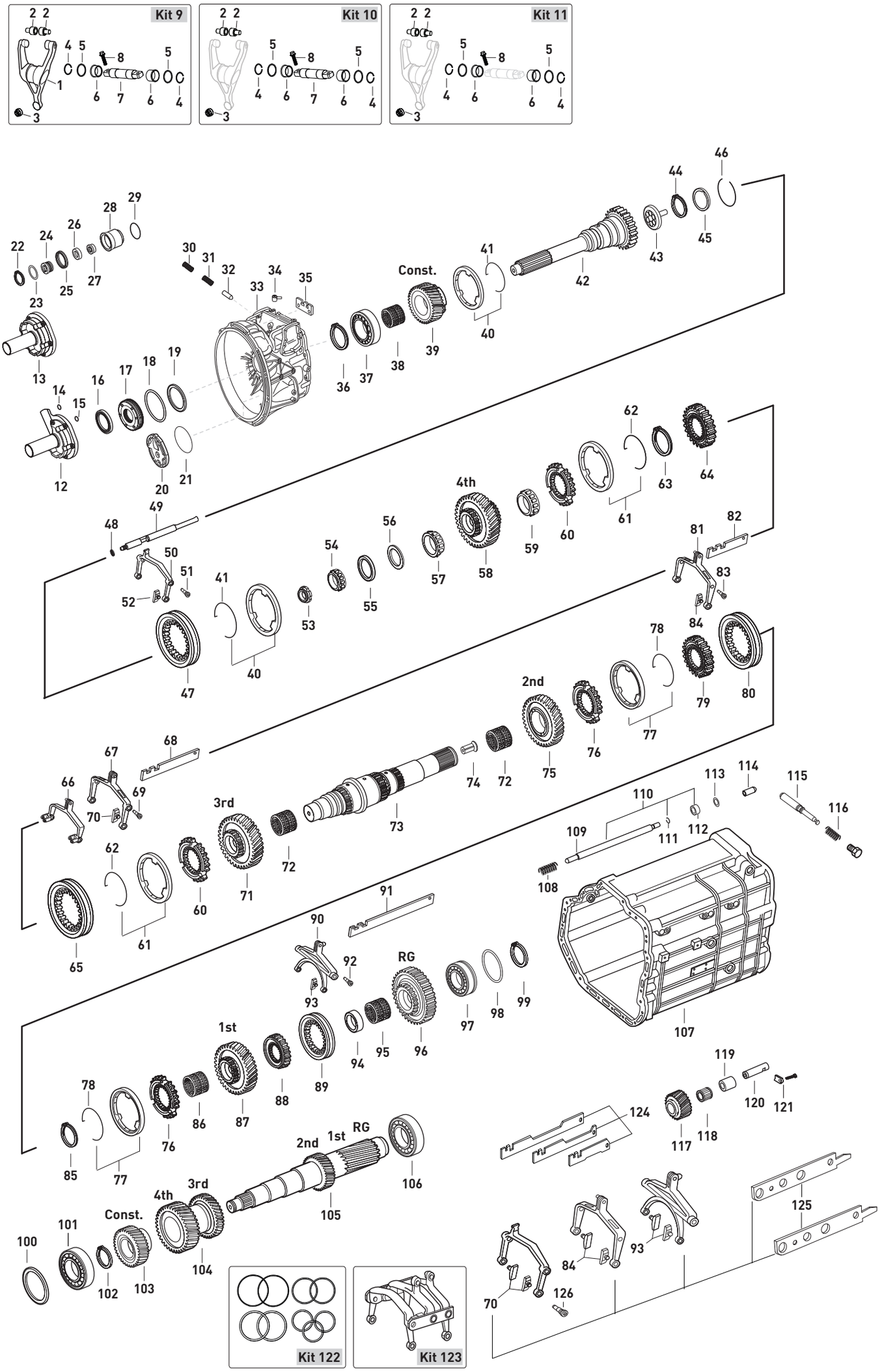






Original parts names, oem numbers, symbols and descriptions used in this catalogue are for reference purposes only.

| Fig. | Kacmaz No | Oem No | Oem Old No | Pcs. | Ürün Tanımı | Description | Sizes | Not | 715540 | 715528 | | |
|---|---|---|---|---|---|---|---|---|---|---|---|---|
| 102 | K21.06425 | 389 994 0041 | | 1 | GRUP MİLİ ÖN BİLYA SEKMANI | RETAINING RING | 2,50mm | | ♦ | ♦ | | |
| 103 | K21.03235 | 945 263 0510 | (945 263 0610) | 1 | TAKVİYE DİŞLİ KARŞILIĞI 26 DİŞ | CONSTANT GEAR 26 T. | | | ♦ | | | |
| | | | (389 263 1610) | | | | | | | | | |
| 103 | K21.03170 | 945 263 0710 | (945 263 0810) | 1 | TAKVİYE DİŞLİ KARŞILIĞI 31 DİŞ | CONSTANT GEAR 31 T. | | | | ♦ | | |
| | | | (389 263 1410) | | | | | | | | | |
| 104 | K21.03452 | 945 263 3213 | (945 263 0013) | 1 | 3./4.VİT.DİŞLİ KARŞILIĞI 29/34 DİŞ | DOUBLE GEAR 3rd/4th 29/34 T. | | | ♦ | ♦ | | |
| 105 | K21.03175 | 945 263 2902 | (945 263 0902) | 1 | GRUP MİLİ 16/21 DİŞ | COUNTER SHAFT 16/21 T. | | | ♦ | ♦ | | |
| | | | (389 263 3102) | | | | | | | | | |
| | | | (389 263 2502) | | | | | | | | | |
| | | | (389 263 1602) | | | | | | | | | |
| | | | (389 263 1302) | | | | | | | | | |
| 106 | K21.03624 | 016 981 1205 | (012 981 9405) | 1 | GRUP MİLİ ARKA BİLYA | ROLLER BEARING | 60X130X33,8mm | | ♦ | ♦ | | |
| | | | (012 981 9205) | | | | | | | | | |
| 107 | | 930 260 2511 | (945 260 9911) | 1 | ŞANZIMAN ORTA GÖVDE | HOUSING | | | ♦ | | | |
| 107 | | 960 261 2929 | | 1 | ŞANZIMAN ORTA GÖVDE | HOUSING | | | | ♦ | | |
| 108 | | 389 993 0501 | | 1 | KİLİTLEME MİL YAYI | SPRING | | | ♦ | | | |
| 109 | K21.06046 | 945 268 0225 | | 1 | KİLİTLEME MİLİ | SHIFTING ROD | | | ♦ | | | |
| 110 | | 960 260 0633 | | 1 | KİLİTLEME MİL TAKIMI | SHIFTING ROD KIT | | | | ♦ | | |
| 111 | | 007993 012200 | | 1 | KİLİTLEME MİLİ SEKMANI | RETAINING RING | | | ♦ | ♦ | | |
| 112 | | 389 268 0051 | | 1 | KİLİTLEME MİL BURCU | SPACER RING | | | ♦ | ♦ | | |
| 113 | | 000998 006019 | | 1 | KİLİTLEME MİLİ AYAR RAYNELİ | FITTED WASHER | 0,10mm | | ♦ | ♦ | | |
| 113 | | 000998 006020 | | 1 | KİLİTLEME MİLİ AYAR RAYNELİ | FITTED WASHER | 0,20mm | | ♦ | ♦ | | |
| 113 | | 000988 006021 | | 1 | KİLİTLEME MİLİ AYAR RAYNELİ | FITTED WASHER | 0,30mm | | ♦ | ♦ | | |
| 113 | | 000988 006013 | | 1 | KİLİTLEME MİLİ AYAR RAYNELİ | FITTED WASHER | 0,50mm | | ♦ | ♦ | | |
| 113 | | 000988 006001 | | 1 | KİLİTLEME MİLİ AYAR RAYNELİ | FITTED WASHER | 1,00mm | | ♦ | ♦ | | |
| 114 | K21.03489 | 389 268 0674 | | 1 | KİLİTLEME MİL FİŞEĞİ | PIN | | | ♦ | ♦ | | |
| 115 | K21.03486 | 389 267 0974 | | 1 | AĞIR SERİ KİLİTLEME MİLİ | PIN | | | ♦ | ♦ | | |
| 116 | K21.06006 | 389 993 3401 | (389 993 0601) | 1 | AĞIR SERİ KİLİTLEME YAYI | SPRING | | | ♦ | ♦ | | |
| 117 | K21.06048 | 389 263 1031 | | 1 | KÜÇÜK GERİ VİTES DİŞLİSİ 21 DİŞ | REVERSE IDLER GEAR 21 T. | | | ♦ | ♦ | | |
| 118 | K21.03838 | 012 981 8910 | (012 981 9010) | 1 | KÜÇÜK GERİ VİTES MASURA BİLYA | NEEDLE CAGE | 42X50X51mm | | ♦ | ♦ | | |
| | | | (019 981 1310) | | | | | | | | | |
| 119 | K21.06031 | 389 263 0850 | | 1 | K.GERİ VİTES MASURA BİLYA ÇANAĞI | BUSHING | 18mm | | ♦ | ♦ | | |
| 120 | K21.06037 | 976 263 0030 | (976 263 1230) | 1 | KÜÇÜK GERİ VİTES PİMİ | PIN | | | ♦ | ♦ | | |
| 121 | K21.07010 | 945 263 0041 | | 1 | KÜÇÜK GERİ VİTES PİM KİLİTLEMESİ | KEY | | | ♦ | ♦ | | |
| 122 | K21.04317 | | | Kit | RAYNEL TAKIMI | WASHER KIT | | | ♦ | ♦ | | |
| 123 | K21.06282 | 960 260 4130 | | Kit | VİTES HİLAL TAKIMI | SHIFTING FORK COMPLETE | | | ♦ | | | |
| 124 | | 960 260 0631 | | Kit | VİTES HİLAL ÇITA TAKIMI | REPAIR KIT | | | | ♦ | | |
| 125 | | 960 260 0732 | | Kit | VİTES HİLAL ÇITA TAKIMI | REPAIR KIT | | | | ♦ | | |
| 126 | K21.04308 | 960 265 0874 | (945 265 1374) | 2 | HİLAL CİVATASI | PIN | | | | ♦ | | |
| | | | (960 265 0674) | | | | | | | | | |

NOTES :
Parts encoded alphabetic and numaric are used together.

NOTLAR :
Alfabetik ve rakam ile kodlanan parçalar birlikte kullanılır.





Original parts names, oem numbers, symbols and descriptions used in this catalogue are for reference purposes only.

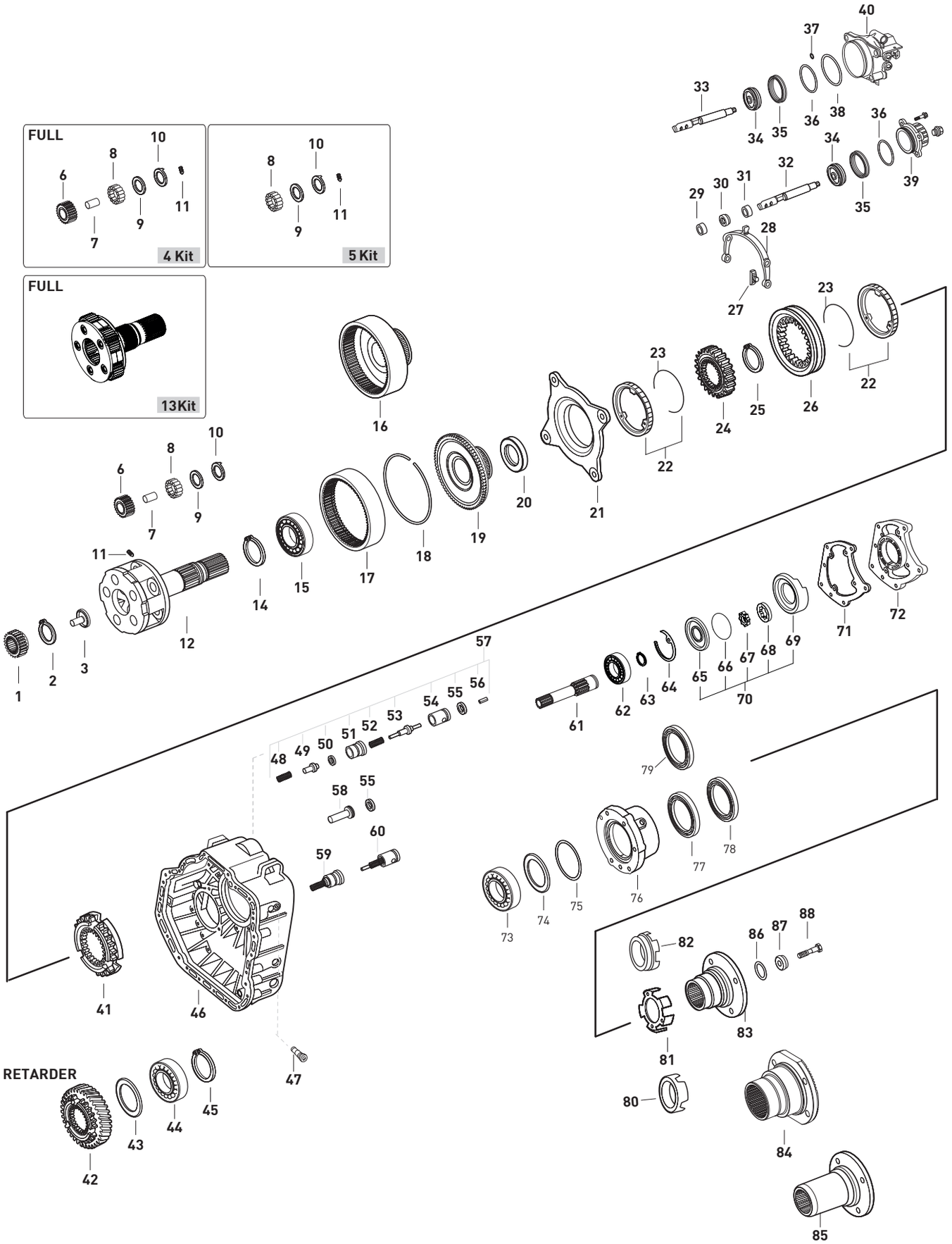




Original parts names, oem numbers, symbols and descriptions used in this catalogue are for reference purposes only.

| Fig. | Kacmaz No | Oem No | Oem Old No | Pcs. | Ürün Tanımı | Description | Sizes | Not | 715540 | 715528 | | |
|---|---|---|---|---|---|---|---|---|---|---|---|---|
| 1 | K21.03169 | 945 262 0909 | (389 262 0909) | 1 | GÜNEŞ DİŞLİ 25 DİŞ | SUN GEAR 25 T. | | | ♦ | | | |
| | | | (389 262 0809) | | | | | | | | | |
| 1 | K21.06506 | 960 262 0009 | (948 262 0209) | 1 | GÜNEŞ DİŞLİ 25 DİŞ | SUN GEAR 25 T. | | | | ♦ | | |
| 2 | K21.04115 | 000472 060000 | | 1 | HEYKEL YAĞ PİPET SEKMANI | SNAP RING | 2,00mm | | ♦ | | | |
| 3 | K21.03435 | 945 269 0834 | (389 269 4734) | 1 | ŞANZIMAN HEYKELİ YAĞ PİPETİ | OIL TUBE | | | ♦ | | | |
| 4 | K21.03178 | 946 260 0097 | (655 260 0197) | Kit | HEYKEL KOZA DİŞLİ TAKIMI | PLANETARY GEAR SET | | | ♦ | ♦ | | |
| 5 | K21.03663 | | | Kit | HEYKEL BİLYA VE PUL TAKIMI | WASHER KIT | | | ♦ | ♦ | | |
| 6 | K21.03436 | 945 262 0006 | | 5 | HEYKEL KOZA DİŞLİSİ 28 DİŞ | PLANETARY GEAR 28 T. | | | ♦ | ♦ | | |
| 7 | K21.03437 | 389 262 0407 | | 5 | HEYKEL KOZA DİŞLİ PİMİ | PLANETARY GEAR PIN | | | ♦ | ♦ | | |
| 8 | K21.03816 | 000 981 4186 | (000 981 4386) | 125 | HEYKEL KOZA DİŞLİ TANE BİLYA | NEEDLE ROLLER | D5X39,6 | | ♦ | ♦ | | |
| 9 | K21.04074 | 389 262 0162 | (389 262 6462) | 10 | HEYKEL KOZA DİŞLİ PULU | THRUST WASHER | | | ♦ | ♦ | | |
| 10 | K21.04075 | 945 262 1162 | (945 262 0162) | 10 | HEYKEL KOZA DİŞLİ PULU | THRUST WASHER | | | ♦ | ♦ | | |
| | | | (389 262 1462) | | | | | | | | | |
| | | | (389 262 1362) | | | | | | | | | |
| | | | (389 262 1162) | | | | | | | | | |
| 11 | K21.03418 | 000914 006109 | | 5 | HEYKEL KOZA DİŞLİ VİDASI | THREADED PIN | M6X14 | | ♦ | ♦ | | |
| 12 | K21.03180 | 946 260 3561 | (946 260 3661) | 1 | ŞANZIMAN HEYKELİ (BOŞ) | PLANETARY CARRIER (EMPTY) | | | ♦ | ♦ | | |
| | | | (945 260 4461) | | | | | | | | | |
| 13 | K21.06313 | 945 260 4661 | | Kit | ŞANZIMAN HEYKELİ (DOLU) | PLANETARY CARRIER (FULL) | | | ♦ | ♦ | | |
| 14 | K21.06864 | 000472 130000 | | 1 | ÇEMBER DİŞLİ BİLYA SEKMANI | RETAINING RING | 130X4mm | | ♦ | ♦ | | |
| 15 | K21.03614 | 008 981 1325 | (004 981 8725) | 1 | ÇEMBER DİŞLİ BİLYASI | ROLLER BEARING | 90X130X14mm | | ♦ | ♦ | | |
| 16 | K21.03438 | 945 262 0108 | (389 262 0808) | 1 | ÇEMBER DİŞLİ 85 DİŞ | RING WHEEL 85 T. | | | ♦ | | | |
| 17 | K21.03440 | 945 262 0208 | | 1 | ÇEMBER DİŞLİ 85 DİŞ | RING WHEEL 85 T. | | | ♦ | | | |
| 17 | K21.03449 | 945 262 1208 | (945 262 0808) | 1 | ÇEMBER DİŞLİ 85 DİŞ | RING WHEEL 85 T. | | | ♦ | ♦ | | |
| 18 | K21.04253 | 389 262 0773 | | 1 | ÇEMBER DİŞLİ SEKMANI | LOCK RING | | | ♦ | ♦ | | |
| 19 | K21.03442 | 930 262 0125 | (389 262 1425) | 1 | PLANET ÇAN DİŞLİ 85 DİŞ | CARRIER HUB 85 T. | | | ♦ | ♦ | | |
| 20 | K21.04076 | 389 262 0251 | | 1 | ŞANZIMAN HEYKELİ ARA PULU | SPACER RING | | | ♦ | ♦ | | |
| 21 | K21.03018 | 389 260 2036 | | 1 | TABLA SENKROMENÇ | FOLLOWER RING | | (1) | ♦ | | | |
| 21 | K21.03037 | 947 260 3036 | (947 260 0836) | 1 | TABLA SENKROMENÇ | FOLLOWER RING | | (2) | ♦ | ♦ | | |
| 22 | K21.03017 | 389 262 0537 | (389 262 0037) | 2 | AĞIR SERİ FRENLEME (Mo) | SYNCHRONIZING CONE / Mo | | (1) | ♦ | | | |
| | | | (389 262 0137) | | | | | | | | | |
| 22 | K21.03078 | 945 260 0850 | | 2 | AĞIR SERİ FRENLEME (C) | SYNCHRONIZING CONE / C | | (1) | ♦ | | | |
| 22 | K21.03185 | 947 260 0945 | | 2 | AĞIR SERİ FRENLEME (Mo) | SYNCHRONIZING CONE / Mo | | (2) | ♦ | ♦ | | |
| 22 | K21.06273 | 947 260 3045 | | 2 | AĞIR SERİ FRENLEME (C) | SYNCHRONIZING CONE / C | | (2) | ♦ | ♦ | | |
| 23 | K21.03077 | 389 262 0293 | | 2 | FRENLEME TELİ | SPRING | | | ♦ | ♦ | | |
| 24 | K21.03079 | 389 262 4935 | (389 262 2035) | 1 | AĞIR SERİ YILDIZ DİŞLİ 73 DİŞ | SYNCHRONIZER HUB 73 T. | | | ♦ | ♦ | | |
| 25 | K21.04356 | 000471 120000 | | 1 | AĞIR SERİ YILDIZ DİŞLİ SEKMANI | RETAINING RING | | | ♦ | ♦ | | |
| 26 | K21.03028 | 945 262 6623 | (945 262 0823) | 1 | AĞIR SERİ HALKA 73 DİŞ | ENGAGING SLEEVE 73 T. | | (1) | ♦ | | | |
| | | | (389 262 1623) | | | | | | | | | |
| | | | (389 262 3823) | | | | | | | | | |
| | | | (945 262 2623) | | | | | | | | | |
| 26 | K21.03033 | 945 262 6923 | (930 262 0623) | 1 | AĞIR SERİ HALKA | ENGAGING SLEEVE | | (2) | ♦ | ♦ | | |
| 27 | K21.03406 | 389 265 2449 | (389 265 1249) | 2 | AĞIR SERİ HİLAL PABUCU | SLIDING PAD | | (1) | ♦ | | | |
| | | | (945 265 0949) | | | | | | | | | |
| | | | (945 265 0349) | | | | | | | | | |
| 27 | K21.03431 | 960 265 0049 | (947 265 0349) | 2 | AĞIR SERİ HİLAL PABUCU | SLIDING PAD | | (2) | ♦ | ♦ | | |
| 28 | K21.06411 | 947 265 0801 | (947 265 1701) | 1 | AĞIR SERİ HİLALİ | SHIFTING FORK | | (1) | ♦ | | | |
| 28 | K21.06324 | 947 265 1901 | (947 265 0901) | 1 | AĞIR SERİ HİLALİ | SHIFTING FORK | | (2) | ♦ | ♦ | | |
| 29 | K21.04254 | 000 992 7703 | (389 267 2250) | 1 | AĞIR SERİ HİLAL MİL BURCU | BUSHING | 21X25X20mm | | ♦ | | | |
| 30 | K21.03523 | 000 267 0197 | (000 267 0397) | 1 | AĞIR SERİ HİLAL MİL KEÇESİ | OIL SEAL | 22X32X8mm | | ♦ | ♦ | | |
| 31 | K21.04178 | 387 267 0650 | (387 267 0250) | 1 | AĞIR SERİ HİLAL MİL BURCU | BUSHING | 34x22x8mm | | ♦ | ♦ | | |
| 32 | | 389 267 3517 | | 1 | AĞIR SERİ HİLAL MİLİ | SHIFTING ROD | | | ♦ | | | |
| 33 | | 945 267 2117 | (389 267 7317) | 1 | AĞIR SERİ HİLAL MİLİ | SHIFTING ROD | | | | ♦ | | |

NOTES :
Parts encoded alphabetic and numaric are used together.

NOTLAR :
Alfabetik ve rakam ile kodlanan parçalar birlikte kullanılır.





Original parts names, oem numbers, symbols and descriptions used in this catalogue are for reference purposes only.

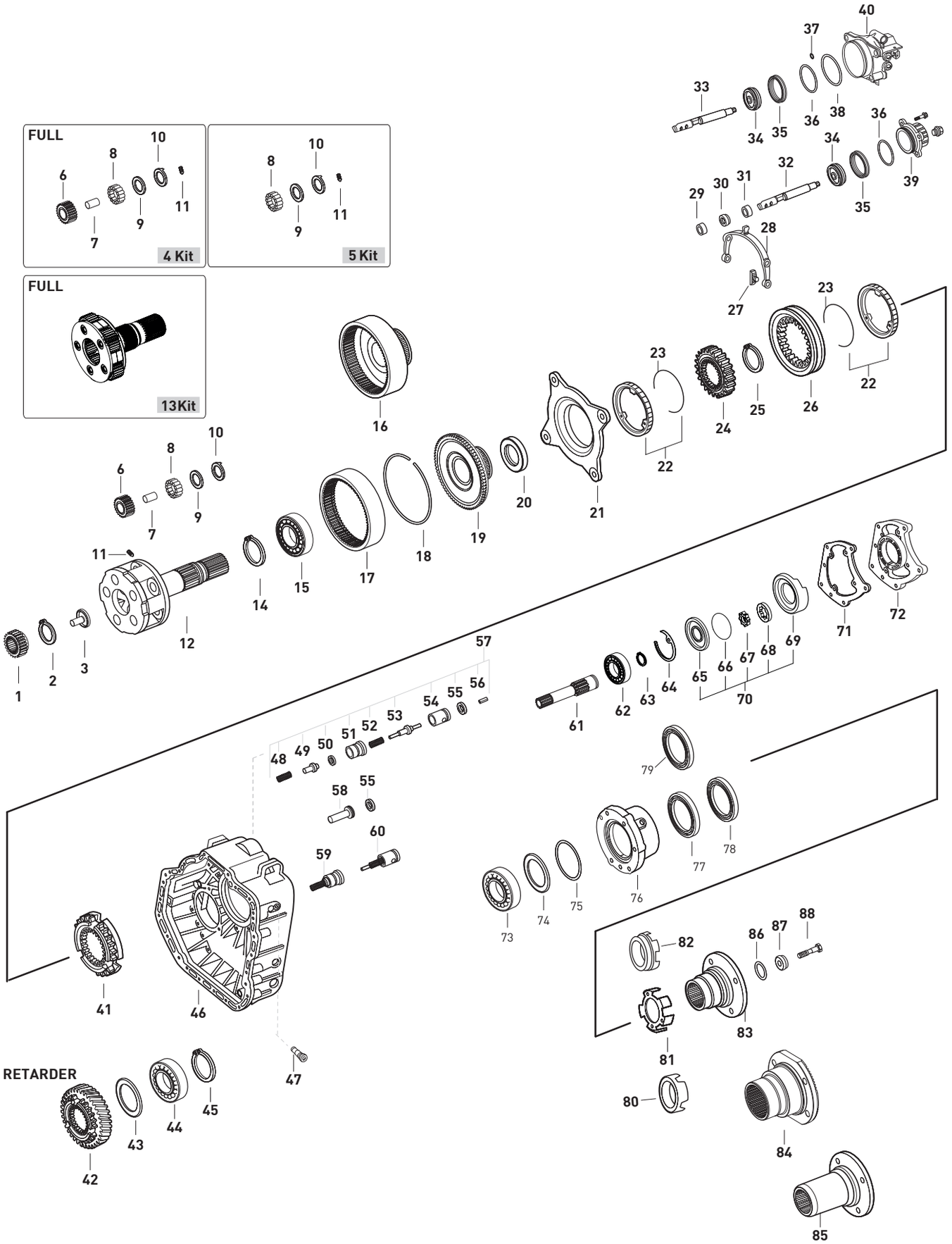




Original parts names, oem numbers, symbols and descriptions used in this catalogue are for reference purposes only.

| Fig. | Kacmaz No | Oem No | Oem Old No | Pcs. | Ürün Tanımı | Description | Sizes | Not | 715540 | 715528 | | |
|---|---|---|---|---|---|---|---|---|---|---|---|---|
| 34 | K21.06975 | 389 267 1018 | (389 267 0118) | 1 | AĞIR SERİ HİLAL MİL PİSTONU | PISTON | | | ♦ | ♦ | | |
| 35 | K21.03525 | 024 997 8347 | (020 997 6747) | 1 | AĞIR SERİ SİLİNDİR KEÇESİ | SEAL RING | 77X90X17mm | | ♦ | ♦ | | |
| 36 | K21.06399 | 013 997 7548 | | 1 | AĞIR SERİ SİLİNDİR ORİNGİ | O-RING | 89,5X3mm | | ♦ | ♦ | | |
| 37 | K21.06636 | 015 997 4048 | (020 997 8748) | 1 | AĞIR SERİ SİLİNDİR ORİNGİ | O-RING | 5X3mm | | | ♦ | | |
| 38 | K21.06968 | 017 997 6545 | | 1 | AĞIR SERİ SİLİNDİR ORİNGİ | O-RING | 96X1,5mm | | | ♦ | | |
| 39 | K21.03540 | 945 267 1119 | (389 267 1319) | 1 | AĞIR SERİ SİLİNDİRİ | SHIFTING CYLINDER | | | ♦ | | | |
| | | | (389 267 4219) | | | | | | | | | |
| | | | (945 267 1319) | | | | | | | | | |
| | | | (945 267 1619) | | | | | | | | | |
| 40 | | 945 260 3763 | | 1 | AĞIR SERİ SİLİNDİRİ | SHIFING CYLINDER | | | | ♦ | | |
| 41 | K21.03187 | 389 262 9234 | (945 262 1234) | 1 | SERİ SENKROMENÇ | ENGAGING RING | | (1) | ♦ | | | |
| 41 | K21.03186 | 945 262 3834 | | 1 | SERİ SENKROMENÇ | ENGAGING RING | | (2) | ♦ | ♦ | | |
| 42 | K21.06059 | 945 264 0420 | (945 264 0220) | 1 | RETARDER DİŞLİSİ 59 DİŞ | RETARDER GEAR 59 T. | | (1) | ♦ | | | |
| | | | (930 264 0220) | | | | | | | | | |
| 42 | | 945 264 0620 | | 1 | RETARDER DİŞLİSİ 59 DİŞ | RETARDER GEAR 59 T. | | (2) | ♦ | | | |
| 42 | K21.06050 | 945 264 0130 | (389 264 0730) | 1 | RETARDER DİŞLİSİ 63 DİŞ | RETARDER GEAR 63 T. | | (1) | ♦ | | | |
| 42 | | 945 264 0520 | | 1 | RETARDER DİŞLİSİ 63 DİŞ | RETARDER GEAR 63 T. | | (2) | ♦ | | | |
| 42 | K21.06058 | 930 264 0420 | | 1 | RETARDER DİŞLİSİ 59 DİŞ | RETARDER GEAR 59 T. | | (2) | ♦ | | | |
| 43 | | 387 264 0064 | | 1 | YAĞ TOPLAMA SACI | OIL BAFFLE | | | ♦ | ♦ | | |
| 44 | | 007 981 8201 | (007 981 8701) | 1 | ŞANZIMAN HEYKEL BİLYASI | BEARING | 103X140X26mm | | ♦ | ♦ | | |
| 45 | | 000472 140000 | | 1 | HEYKEL BİLYA SEKMANI | LOCK RING | 140X4mm | | ♦ | ♦ | | |
| 46 | | 945 260 6812 | (945 261 4526) | 1 | ŞANZIMAN ARKA GÖVDE | HOUSING | | | ♦ | | | |
| 46 | | 960 260 2212 | | 1 | ŞANZIMAN ARKA GÖVDE | HOUSING | | | | ♦ | | |
| 47 | K21.06026 | 945 265 3074 | (945 265 1474) | 2 | AĞIR SERİ HİLAL CİVATASI | PIN | | | ♦ | ♦ | | |
| | | | (945 265 1774) | | | | | | | | | |
| | | | (945 265 2674) | | | | | | | | | |
| 48 | | 389 993 5301 | | 1 | YAĞ BASINÇ YAYI | SPRING | | | ♦ | ♦ | | |
| 49 | | 389 269 1026 | (389 269 0926) | 1 | YAĞ BASINÇ VALFİ | SELECTOR VALVE | | | ♦ | ♦ | | |
| 50 | K21.04210 | 013 997 0148 | (020 997 8348) | 1 | YAĞ BASINÇ ORİNGİ | O-RING | 13,3X2,4mm | | ♦ | ♦ | | |
| 51 | | 389 269 1444 | (389 269 0744) | 1 | YAĞ BASINÇ VALF GÖVDESİ | VALVE INSERT | | | ♦ | ♦ | | |
| 52 | | 389 993 4401 | | 1 | YAĞ BASINÇ VALF MİL YAYI | SPRING | | | ♦ | ♦ | | |
| 53 | | 389 269 0826 | | 1 | YAĞ BASINÇ VALF MİLİ | SELECTOR VALVE | | | ♦ | ♦ | | |
| 54 | | 389 269 0844 | | 1 | YAĞ BASINÇ VALF TOPU | BALL | | | ♦ | ♦ | | |
| 55 | K21.04212 | 013 997 0048 | (020 997 8248) | 1 | YAĞ BASINÇ VALF ORİNGİ | O-RING | 19,2X3mm | | ♦ | ♦ | | |
| 56 | | 001481 004001 | (001481 004049) | 1 | EMNİYET PİMİ | CLAMPING SLEEVE | | | ♦ | ♦ | | |
| 57 | K21.06962 | 655 260 0157 | | Kit | YAĞ BASINÇ VALFİ KOMPLE | VALVE KIT | | | ♦ | ♦ | | |
| 58 | K21.06979 | 389 265 0176 | (389 265 0076) | 1 | YAĞ BASINÇ VALFİ ALIN FİBERİ | WASHER | | | ♦ | ♦ | | |
| 59 | K21.06953 | 960 260 1057 | | Kit | YAĞ BASINÇ VALFİ KOMPLE | VALVE KIT | | | ♦ | ♦ | | |
| 60 | K21.06973 | 960 260 1257 | | Kit | YAĞ BASINÇ VALFİ KOMPLE | VALVE KIT | | | ♦ | ♦ | | |
| 61 | K21.03085 | 947 264 0005 | (389 269 0310) | 1 | YAĞ POMPA MİLİ | OIL PUMP SHAFT | | | ♦ | | | |
| 61 | K21.06969 | 960 264 0105 | | 1 | YAĞ POMPA MİLİ | OIL PUMP SHAFT | | | | ♦ | | |
| 62 | K21.03613 | 004 981 8625 | (004 981 9025) | 1 | PTO MİL BİLYASI | ROLLER BEARING | 45X75X16mm | | ♦ | ♦ | | |
| | | | (006 981 8225) | | | | | | | | | |
| 63 | K21.06964 | 000471 045000 | (003 994 3741) | 1 | PTO MİL BİLYA SEKMANI | RETAINING RING | 1,75mm | | ♦ | ♦ | | |
| 64 | K21.94304 | | | 1 | YAĞ POMPA PULU | SPACER WASHER | 0,70mm | | ♦ | ♦ | | |
| 64 | K21.04304 | 389 262 6254 | | 1 | YAĞ POMPA PULU | SPACER WASHER | 0,80mm | | ♦ | ♦ | | |
| 64 | K21.04303 | 389 262 5954 | | 1 | YAĞ POMPA PULU | SPACER WASHER | 0,90mm | | ♦ | ♦ | | |
| 64 | K21.04302 | 389 262 5754 | | 1 | YAĞ POMPA PULU | SPACER WASHER | 1,00mm | | ♦ | ♦ | | |
| 64 | K21.04301 | 389 262 5554 | | 1 | YAĞ POMPA PULU | SPACER WASHER | 1,10mm | | ♦ | ♦ | | |
| 64 | K21.04305 | 389 262 5354 | | 1 | YAĞ POMPA PULU | SPACER WASHER | 1,20mm | | ♦ | ♦ | | |
| 65 | K21.03558 | 947 264 0287 | | 1 | YAĞ POMPA KAPAĞI | OIL PUMP COVER | | PTO | ♦ | | | |
| 65 | | 947 264 0487 | | 1 | YAĞ POMPA KAPAĞI | OIL PUMP COVER | | PTO | | ♦ | | |
| 65 | K21.03412 | 945 269 0201 | (389 269 2501) | 1 | YAĞ POMPA KAPAĞI | OIL PUMP COVER | | | ♦ | ♦ | | |

NOTES :
Parts encoded alphabetic and numaric are used together.

NOTLAR :
Alfabetik ve rakam ile kodlanan parçalar birlikte kullanılır.





Original parts names, oem numbers, symbols and descriptions used in this catalogue are for reference purposes only.

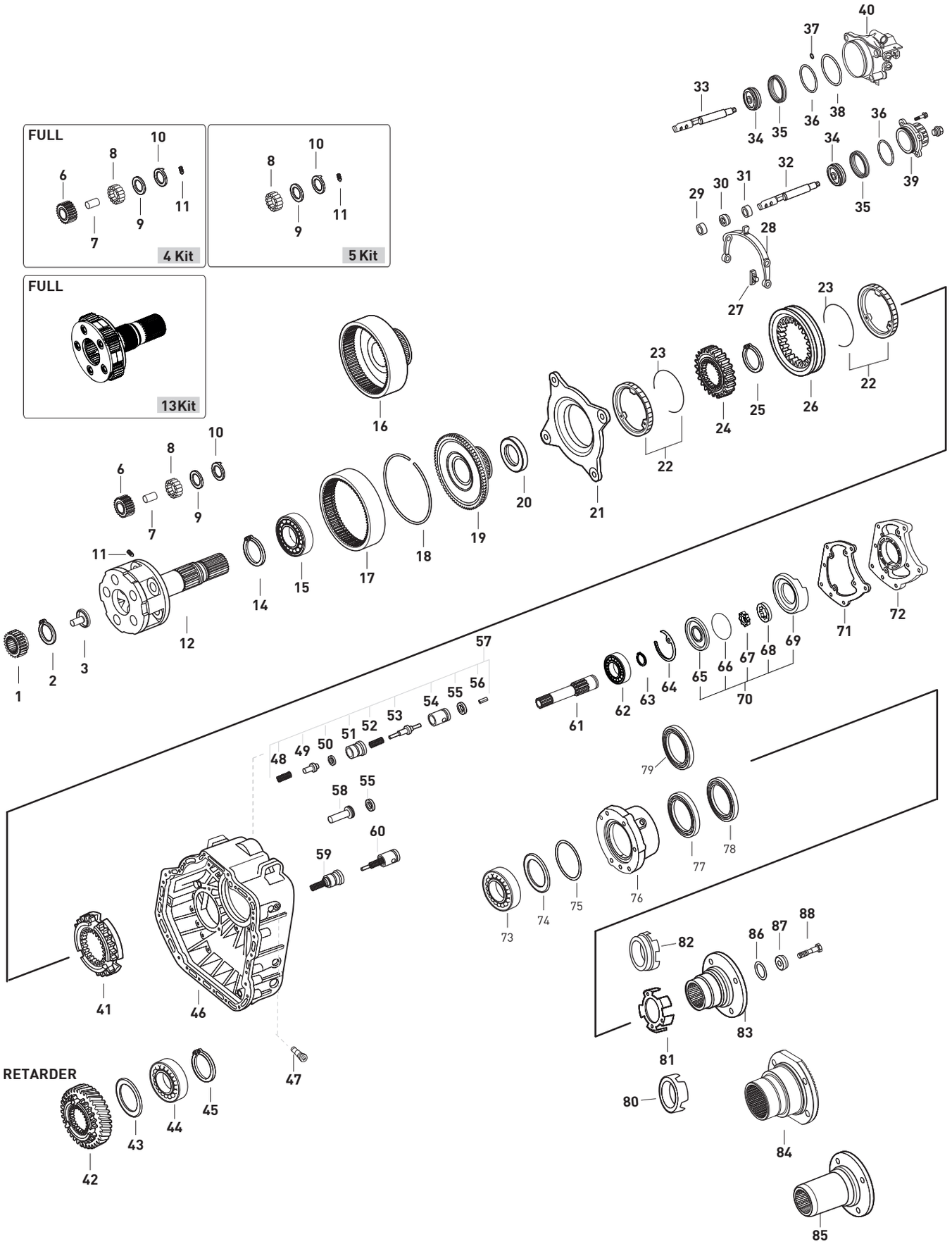




Original parts names, oem numbers, symbols and descriptions used in this catalogue are for reference purposes only.

| Fig. | Kacmaz No | Oem No | Oem Old No | Pcs. | Ürün Tanımı | Description | Sizes | Not | 715540 | 715528 | | |
|---|---|---|---|---|---|---|---|---|---|---|---|---|
| 66 | K21.03511 | 029 997 5748 | | 1 | YAĞ POMPA KAPAK ORİNGİ | O-RING | 112X2,5mm | | ♦ | ♦ | | |
| 67 | K21.03413 | 389 269 1406 | (389 269 1506) | 1 | YAĞ POMPA İÇ ROTOR | OIL PUMP GEAR | | | ♦ | ♦ | | |
| 68 | K21.03414 | 389 269 0706 | (389 269 1206) | 1 | YAĞ POMPA DIŞ ROTOR | ROTOR | | | ♦ | ♦ | | |
| 69 | K21.03478 | 947 269 1001 | | 1 | YAĞ POMPA GÖVDESİ | OIL PUMP HOUSING | | (M) | ♦ | ♦ | | |
| 69 | K21.03415 | 389 269 3801 | | 1 | YAĞ POMPA GÖVDESİ | OIL PUMP HOUSING | | (N) | ♦ | | | |
| 70 | K21.03475 | 389 260 0790 | | 1 | YAĞ POMPASI | OIL PUMP | | (M) | ♦ | ♦ | | |
| 70 | K21.03411 | 389 260 0690 | (389 260 0590) | 1 | YAĞ POMPASI | OIL PUMP | | (N) | ♦ | | | |
| 71 | K21.04306 | 945 261 0280 | | 1 | PTO KAPAK CONTASI | GASKET | | | ♦ | ♦ | | |
| 72 | K21.03566 | 945 261 1033 | (945 261 1433) | 1 | PTO KAPAĞI | COVER | | | ♦ | ♦ | | |
| | | | (400 261 1133) | | | | | | | | | |
| 73 | K21.03625 | 008 981 3025 | (008 981 5225) | 1 | ŞANZIMAN ARKA BİLYA | ROLLER BEARING | 80X150X28mm | | ♦ | ♦ | | |
| | | | (007 981 3325) | | | | | | | | | |
| | | | (008 981 1425) | | | | | | | | | |
| 74 | K21.04081 | 389 262 7754 | | 1 | ŞANZIMAN HEYKEL AYAR PULU | THRUST WASHER | 1,40mm | | ♦ | ♦ | | |
| 74 | K21.04139 | 389 262 5152 | | 1 | ŞANZIMAN HEYKEL AYAR PULU | THRUST WASHER | 0,80mm | | ♦ | ♦ | | |
| 74 | K21.04080 | 389 262 5052 | | 1 | ŞANZIMAN HEYKEL AYAR PULU | THRUST WASHER | 0,40mm | | ♦ | ♦ | | |
| 74 | K21.04079 | 389 262 7654 | | 1 | ŞANZIMAN HEYKEL AYAR PULU | THRUST WASHER | 0,25mm | | ♦ | ♦ | | |
| 74 | K21.04140 | 389 262 4952 | | 1 | ŞANZIMAN HEYKEL AYAR PULU | THRUST WASHER | 0,20mm | | ♦ | ♦ | | |
| 74 | K21.04141 | 389 262 4852 | | 1 | ŞANZIMAN HEYKEL AYAR PULU | THRUST WASHER | 0,15mm | | ♦ | ♦ | | |
| 74 | K21.04078 | 389 262 4752 | | 1 | ŞANZIMAN HEYKEL AYAR PULU | THRUST WASHER | 0,10mm | | ♦ | ♦ | | |
| 75 | K21.06713 | 015 997 2848 | (020 997 8548) | 1 | ŞANZIMAN ARKA KAPAK ORİNGİ | O-RING | 149,5X3mm | | ♦ | ♦ | | |
| 76 | K21.06238 | 389 261 1920 | (389 261 2020) | 1 | ŞANZIMAN ARKA KAPAK | COVER | | NEW | ♦ | | | |
| 76 | K21.06239 | 930 261 0420 | (930 261 0520) | 1 | ŞANZIMAN ARKA KAPAK | COVER | | RETARDER | ♦ | | | |
| | | | (389 261 1820) | | | | | | | | | |
| 77 | K21.03507 | 013 997 7347 | (015 997 4247) | 1 | ŞANZIMAN ARKA KEÇE | OIL SEAL | 95X115X13/12mm | | ♦ | ♦ | | |
| | | | (013 997 5647) | | | | | | | | | |
| 78 | K21.03528 | 013 997 7247 | (013 997 5547) | 1 | ŞANZIMAN ARKA KEÇE | OIL SEAL | 95X115X13mm | | ♦ | ♦ | | |
| | | | (014 997 1947) | | | | | | | | | |
| 79 | K21.03512 | 015 997 7846 | (023 997 1647) | 1 | ŞANZIMAN ARKA KEÇE | OIL SEAL | 95X115X15,5mm | | ♦ | ♦ | | |
| 80 | | 945 262 0528 | (389 260 0150) | 1 | ŞANZIMAN KM DEVİR SACI | PULSE STAR | | | ♦ | | | |
| 81 | K21.04134 | 930 262 0028 | | 1 | ŞANZIMAN KM DEVİR SACI | PULSE STAR | | (3) | ♦ | | | |
| 81 | | 945 262 0228 | | 1 | ŞANZIMAN KM DEVİR SACI | PULSE STAR | | (3)(5)(6) | ♦ | | | |
| 82 | | 945 262 0628 | (389 260 0350) | 1 | ŞANZIMAN KM DEVİR SACI | PULSE STAR | | (6) | ♦ | | | |
| 82 | K21.06947 | 930 262 1428 | (930 262 0128) | 1 | ŞANZIMAN KM DEVİR SACI | PULSE STAR | | (4) | | ♦ | | |
| 83 | K21.03196 | 945 262 0045 | | 1 | ŞANZIMAN FLANŞI | COMPANION FLANGE | 4-H, Ø180mm | (3) | ♦ | | | |
| 84 | K21.06052 | 945 262 0245 | | 1 | ŞANZIMAN FLANŞI | COMPANION FLANGE | 4-H, Ø200mm | (4) | | ♦ | | |
| 84 | K21.03129 | 389 262 0645 | | 1 | ŞANZIMAN FLANŞI | COMPANION FLANGE | 4-H, Ø200mm | (5) | ♦ | | | |
| 84 | K21.03443 | 930 262 0245 | | 1 | ŞANZIMAN FLANŞI | COMPANION FLANGE | 4-H, Ø180mm | (6) | ♦ | | | |
| 84 | | 389 262 0545 | | 1 | ŞANZIMAN FLANŞI | COMPANION FLANGE | 4-H, Ø180mm | (6) | ♦ | | | |
| 84 | | 389 262 0945 | | 1 | ŞANZIMAN FLANŞI | COMPANION FLANGE | D=200mm | (6) | ♦ | | | |
| 85 | | 387 264 1945 | | 1 | ŞANZIMAN FLANŞI | COMPANION FLANGE | D=198mm | | ♦ | | | |
| 85 | | 387 264 2045 | | 1 | ŞANZIMAN FLANŞI | COMPANION FLANGE | D=198mm | | ♦ | | | |
| 85 | | 945 262 0445 | | 1 | ŞANZIMAN FLANŞI | COMPANION FLANGE | D=200mm | | ♦ | | | |
| 85 | | 945 262 0545 | | 1 | ŞANZIMAN FLANŞI | COMPANION FLANGE | D=200mm | | ♦ | | | |
| 86 | K21.04310 | 014 997 5148 | (020 997 8648) | 1 | ŞANZIMAN FLANŞ ORİNGİ | O-RING | 72,4X5,3mm | | ♦ | ♦ | | |
| 86 | K21.06978 | 015 997 4348 | | 1 | ŞANZIMAN FLANŞ ORİNGİ | O-RING | 25X3mm | (E) | ♦ | ♦ | | |
| 87 | K21.04214 | 945 262 0762 | | 1 | ŞANZIMAN FLANŞI ALIN PULU | THRUST WASHER | 93X20mm | (C) | ♦ | ♦ | | |
| 87 | K21.06977 | 389 262 0362 | (945 262 0062) | 1 | ŞANZIMAN FLANŞI ALIN PULU | THRUST WASHER | 95X24mm | (D) | ♦ | ♦ | | |
| 87 | K21.06283 | 387 264 1162 | | 1 | ŞANZIMAN FLANŞI ALIN PULU | THRUST WASHER | | (E) | ♦ | ♦ | | |
| 88 | K21.06280 | 000000 006750 | (000000 005728) | 1 | ŞANZIMAN FLANŞI ALIN VİDASI | SCREW | M20X1,5X80 | (C) | ♦ | ♦ | | |
| 88 | K21.06028 | 945 990 0019 | (389 990 2019) | 1 | ŞANZIMAN FLANŞI ALIN VİDASI | SCREW | M24X85X2 | (D) | ♦ | ♦ | | |
| | | | (389 990 0219) | | | | | | | | | |
| 88 | K21.06281 | 387 990 1719 | | 1 | ŞANZIMAN FLANŞI ALIN VİDASI | SCREW | M24X95X2 | (E) | ♦ | ♦ | | |

NOTES :
Parts encoded alphabetic and numaric are used together.

NOTLAR :
Alfabetik ve rakam ile kodlanan parçalar birlikte kullanılır.





Original parts names, oem numbers, symbols and descriptions used in this catalogue are for reference purposes only.

SYNCHRONIZER KIT CONSTANT
NEW MODEL

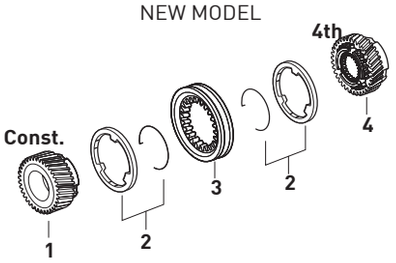


| Fig. | Kacmaz No. | Oem No | Oem Old No | Pcs. | Ürün Tanımı | Description |
|---|---|---|---|---|---|---|
| | K21.06510 | | | Kit | TAKVİYE SENK.KİT | SYNCH.KIT CONST. |
| 1 | K21.03130 | 945 262 9817 | (945 262 5417) | 1 | TAKVİYE DİŞLİSİ 32 DİŞ | CONSTANT GEAR 32 T. |
| 2 | K21.03136 | 945 260 2245 | (946 262 6337) | 2 | TAKVİYE FRENLEME (Mo) | SYNCHRONIZING CONE / Mo |
| 3 | K21.03137 | 945 262 6823 | (945 262 6423) | 1 | TAKVİYE HALKA | ENGAGING SLEEVE |
| 4 | K21.03220 | 945 262 9517 | (945 262 5617) | 1 | 4.VİTES DİŞLİSİ 36 DİŞ | GEAR 4th 36 T. |

SYNCHRONIZER KIT CONST.
NEW MODEL

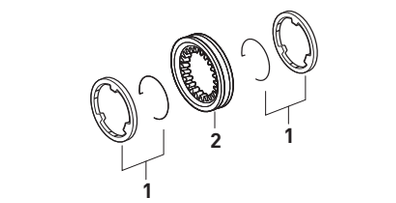


| Fig. | Kacmaz No. | Oem No | Oem Old No | Pcs. | Ürün Tanımı | Description |
|---|---|---|---|---|---|---|
| | K21.06224 | | | Kit | TAK.SENKROMENÇ KİT | SYNCHRONIZER KIT Const |
| 1 | K21.03136 | 945 260 2245 | (946 262 6337) | 2 | TAKVİYE FRENLEME (Mo) | SYNCHRONIZING CONE / Mo |
| 2 | K21.03137 | 945 262 6823 | (945 262 6423) | 1 | TAKVİYE HALKA | ENGAGING SLEEVE |

SYNCHRONIZER KIT CONSTANT
OLD MODEL

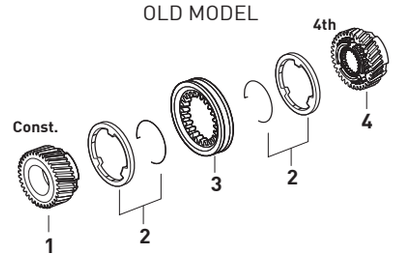


| Fig. | Kacmaz No. | Oem No | Oem Old No | Pcs. | Ürün Tanımı | Description |
|---|---|---|---|---|---|---|
| | K21.06511 | | | Kit | TAKVİYE SENK.KİT | SYNCH.KIT CONST. |
| 1 | K21.03030 | 945 262 4110 | (945 262 1610) | 1 | TAKVİYE DİŞLİSİ 32 DİŞ | CONSTANT GEAR 32 T. |
| 2 | K21.03015 | 389 262 0637 | (387 262 0837) | 2 | TAKVİYE FRENLEME (Mo) | SYNCHRONIZING CONE / Mo |
| 3 | K21.03002 | 945 262 2823 | (945 262 0623) | 1 | TAKVİYE HALKA | ENGAGING SLEEVE |
| 4 | K21.03221 | 389 262 7910 | (945 262 2810) | 1 | 4.VİTES DİŞLİSİ 36 DİŞ | GEAR 4th 36 T. |

SYNCHRONIZER KIT CONST.
OLD MODEL

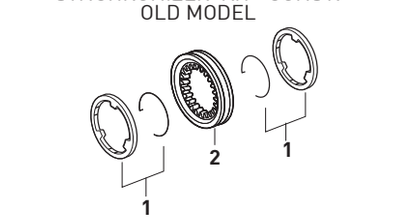


| Fig. | Kacmaz No. | Oem No | Oem Old No | Pcs. | Ürün Tanımı | Description |
|---|---|---|---|---|---|---|
| | K21.06225 | | | Kit | TAK.SENKROMENÇ KİT | SYNCHRONIZER KIT Const |
| 1 | K21.03015 | 389 262 0637 | (387 262 0837) | 2 | TAKVİYE FRENLEME (Mo) | SYNCHRONIZING CONE / Mo |
| 2 | K21.03002 | 945 262 2823 | (945 262 0323) | 1 | TAKVİYE HALKA | ENGAGING SLEEVE |

SYNCHRONIZER KIT 3rd/4th
NEW MODEL

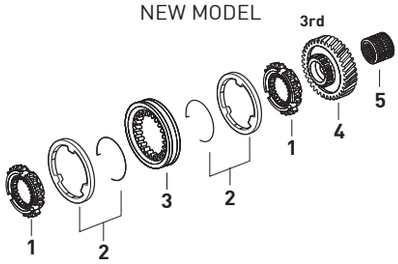


| Fig. | Kacmaz No. | Oem No | Oem Old No | Pcs. | Ürün Tanımı | Description |
|---|---|---|---|---|---|---|
| | K21.06513 | | | Kit | 3./4.VİTES SENK.KİT | SYNCH.KIT 3rd/4th |
| 1 | K21.03146 | 945 262 8234 | (945 262 5434) | 2 | 3./4.VİTES SENKROMENÇ | ENGAGING RING |
| 2 | K21.03148 | 947 260 1945 | (947 260 4645) | 2 | 3./4.VİTES FRENLEME | SYNCHRONIZING CONE |
| | | | (946 262 6137) | | | |
| 3 | K21.03151 | 945 262 6523 | (930 262 0523) | 1 | 3./4.VİTES HALKA | ENGAGING SLEEVE |
| 4 | K21.03223 | 389 262 3713 | (945 262 3913) | 1 | 3.VİTES DİŞLİSİ 29 DİŞ | GEAR 3rd 29 T. |
| 5 | K21.03810 | 018 981 6610 | (010 981 5310) | 1 | 3.VİTES MASURA BİLYA | NEEDLE CAGE 85X93X53mm |

SYNCHRONIZER KIT 3rd/4th
NEW MODEL

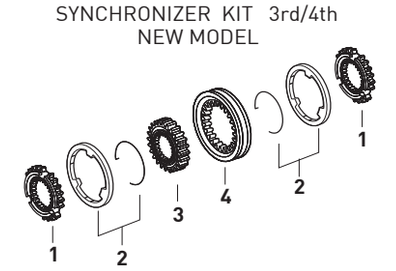


| Fig. | Kacmaz No. | Oem No | Oem Old No | Pcs. | Ürün Tanımı | Description |
|---|---|---|---|---|---|---|
| | K21.06211 | | | Kit | 3./4.VİTES SENK.KİT | SYNCH.KIT 3rd/4th |
| 1 | K21.03146 | 945 262 8234 | (945 262 5434) | 2 | 3./4.VİTES SENKROMENÇ | ENGAGING RING |
| 2 | K21.03148 | 947 260 1945 | (947 260 4645) | 2 | 3./4.VİTES FRENLEME (Mo) | SYNCHRONIZING CONE / Mo |
| | | | (946 262 6137) | | | |
| 3 | K21.03149 | 389 262 4735 | (389 262 4635) | 1 | 3./4.VİTES YILDIZ DİŞLİ | SYNCHRONIZER HUB |
| 4 | K21.03151 | 945 262 6523 | (930 262 0523) | 1 | 3./4.VİTES HALKA | ENGAGING SLEEVE |

SYNCHRONIZER KIT 3rd/4th
NEW MODEL

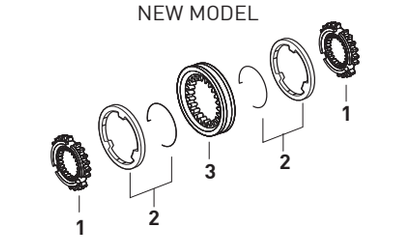


| Fig. | Kacmaz No. | Oem No | Oem Old No | Pcs. | Ürün Tanımı | Description |
|---|---|---|---|---|---|---|
| | K21.06512 | | | Kit | 3./4.VİTES SENK.KİT | SYNCH.KIT 3rd/4th |
| 1 | K21.03146 | 945 262 8234 | (945 262 5434) | 2 | 3./4.VİTES SENKROMENÇ | ENGAGING RING |
| 2 | K21.03148 | 947 260 1945 | (947 260 4645) | 2 | 3./4.VİTES FRENLEME (Mo) | SYNCHRONIZING CONE / Mo |
| | | | (946 262 6137) | | | |
| 3 | K21.03151 | 945 262 6523 | (930 262 0523) | 1 | 3./4.VİTES HALKA | ENGAGING SLEEVE |

**Original parts names, oem numbers, symbols and descriptions used in this catalogue are for reference purposes only.**

| Fig. | Kacmaz No. | Oem No | Oem Old No | Pcs. | Ürün Tanımı | Description |
|---|---|---|---|---|---|---|
| | K21.06515 | | | Kit | 3./4 .VİTES SENK.KİT | SYNCH.KIT 3rd/4th |
| 1 | K21.03027 | 945 262 0534 | (389 262 5034) | 2 | 3./4.VİTES SENKROMENÇ | ENGAGING RING |
| 2 | K21.03016 | 389 262 0737 | (387 262 0937) | 2 | 3./4.VİTES FRENLEME (Mo) | SYNCHRONIZING CONE / Mo |
| 3 | K21.03149 | 389 262 4735 | (389 262 4635) | 1 | 3./4.VİTES YILDIZ DİŞLİ | SYNCHRONIZER HUB |
| 4 | K21.03223 | 389 262 3713 | (945 262 3913) | 1 | 3.VİTES DİŞLİSİ 29 DİŞ | GEAR 3rd 29 T. |
| 5 | K21.03810 | 018 981 6610 | (010 981 5310) | 1 | 3.VİT.MASURA BİLYA | NEEDLE CAGE 85X93X53mm |

SYNCHRONIZER KIT 3rd/4th
OLD MODEL

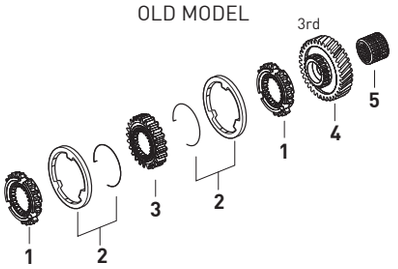


| Fig. | Kacmaz No. | Oem No | Oem Old No | Pcs. | Ürün Tanımı | Description |
|---|---|---|---|---|---|---|
| | K21.06212 | | | Kit | 3./4.VİTES SENK.KİT | SYNCH.KIT 3rd/4th |
| 1 | K21.03027 | 945 262 0534 | (389 262 5034) | 2 | 3./4.VİTES SENKROMENÇ | ENGAGING RING |
| 2 | K21.03016 | 389 262 0737 | (387 262 0937) | 2 | 3./4.VİTES FRENLEME (Mo) | SYNCHRONIZING CONE / Mo |
| 3 | K21.03149 | 389 262 4735 | (389 262 4635) | 1 | 3./4.VİTES YILDIZ DİŞLİ | SYNCHRONIZER HUB |
| 4 | K21.03009 | 945 262 2723 | (945 262 0423) | 1 | 3./4.VİTES HALKA | ENGAGING SLEEVE |
| | | | (389 262 2623) | | | |

SYNCHRONIZER KIT 3rd/4th
OLD MODEL

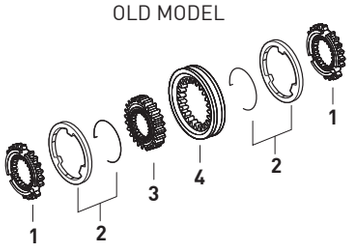


| Fig. | Kacmaz No. | Oem No | Oem Old No | Pcs. | Ürün Tanımı | Description |
|---|---|---|---|---|---|---|
| | K21.06514 | | | Kit | 3./4.VİTES SENK.KİT | SYNCH.KIT 3rd/4th |
| 1 | K21.03027 | 945 262 0534 | (389 262 5034) | 2 | 3./4.VİTES SENKROMENÇ | ENGAGING RING |
| 2 | K21.03016 | 389 262 0737 | (387 262 0937) | 2 | 3./4.VİTES FRENLEME (Mo) | SYNCHRONIZING CONE / Mo |
| 3 | K21.03009 | 945 262 2723 | (945 262 0423) | 1 | 3./4.VİTES HALKA | ENGAGING SLEEVE |
| | | | (389 262 2623) | | | |

SYNCHRONIZER KIT 3rd/4th
OLD MODEL

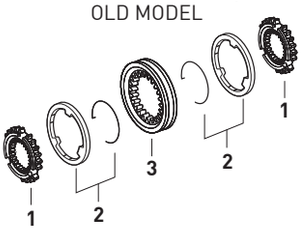


| Fig. | Kacmaz No. | Oem No | Oem Old No | Pcs. | Ürün Tanımı | Description |
|---|---|---|---|---|---|---|
| | K21.06214 | | | Kit | 1./2.VİTES SENK.KİT | SYNCH.KIT 1st/2nd |
| 1 | K21.03160 | 945 262 5534 | | 2 | 1./2.VİTES SENKROMENÇ | ENGAGING RING |
| 2 | K21.03148 | 947 260 1945 | (947 260 4645) | 2 | 1./2.VİTES FRENLEME (Mo) | SYNCHRONIZING CONE / Mo |
| | | | (946 262 6137) | | | |
| 3 | K21.03161 | 389 262 2535 | (945 262 0135) | 1 | 3./4.VİTES YILDIZ DİŞLİ | SYNCHRONIZER HUB |
| 4 | K21.03151 | 945 262 6523 | (930 262 0523) | 1 | 1./2.VİTES HALKA | ENGAGING SLEEVE |

SYNCHRONIZER KIT 1st/2nd
NEW MODEL

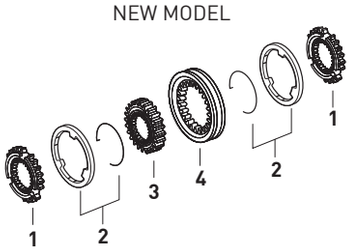


| Fig. | Kacmaz No. | Oem No | Oem Old No | Pcs. | Ürün Tanımı | Description |
|---|---|---|---|---|---|---|
| | K21.06516 | | | Kit | 1./2.VİTES SENK.KİT | SYNCH.KIT 1st/2nd |
| 1 | K21.03160 | 945 262 5534 | | 2 | 1./2.VİTES SENKROMENÇ | ENGAGING RING |
| 2 | K21.03148 | 947 260 1945 | (947 260 4645) | 2 | 1./2.VİTES FRENLEME | SYNCHRONIZING CONE |
| | | | (946 262 6137) | | | |
| 3 | K21.03151 | 945 262 6523 | (930 262 0523) | 1 | 1./2.VİTES HALKA | ENGAGING SLEEVE |

SYNCHRONIZER KIT 1st/2nd
NEW MODEL

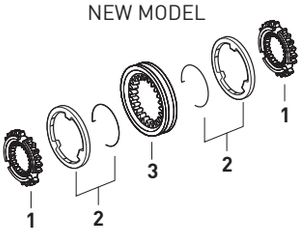


| Fig. | Kacmaz No. | Oem No | Oem Old No | Pcs. | Ürün Tanımı | Description |
|---|---|---|---|---|---|---|
| | K21.06215 | | | Kit | 1./2.VİTES SENK.KİT | SYNCH.KIT 1st/2nd |
| 1 | K21.03025 | 945 262 0434 | (389 262 0034) | 2 | 1./2.VİTES SENKROMENÇ | ENGAGING RING |
| 2 | K21.03016 | 389 262 0737 | (387 262 0937) | 2 | 1./2.VİTES FRENLEME (Mo) | SYNCHRONIZING CONE / Mo |
| 3 | K21.03161 | 389 262 2535 | (945 262 0135) | 1 | 1./2.VİTES YILDIZ DİŞLİ | SYNCHRONIZER HUB |
| 4 | K21.03009 | 945 262 2723 | (945 262 0423) | 1 | 1./2.VİTES HALKA | ENGAGING SLEEVE |
| | | | (389 262 2623) | | | |

SYNCHRONIZER KIT 1st/2nd
OLD MODEL

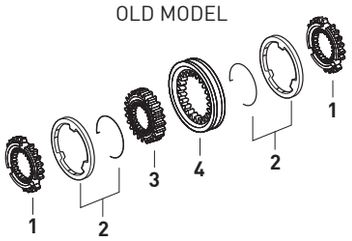


| Fig. | Kacmaz No. | Oem No | Oem Old No | Pcs. | Ürün Tanımı | Description |
|---|---|---|---|---|---|---|
| | K21.06517 | | | Kit | 1./2.VİTES SENK.KİT | SYNCH.KIT 1st/2nd |
| 1 | K21.03025 | 945 262 0434 | (389 262 0034) | 2 | 1./2.VİTES SENKROMENÇ | ENGAGING RING |
| 2 | K21.03016 | 389 262 0737 | (387 262 0937) | 2 | 1./2.VİTES FRENLEME (Mo) | SYNCHRONIZING CONE / Mo |
| 3 | K21.03009 | 945 262 2723 | (945 262 0423) | 1 | 1./2.VİTES HALKA | ENGAGING SLEEVE |
| | | | (389 262 2623) | | | |

SYNCHRONIZER KIT 1st/2nd
OLD MODEL

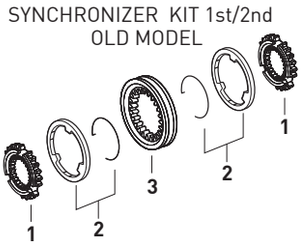




Original parts names, oem numbers, symbols and descriptions used in this catalogue are for reference purposes only.

SYNCHRONIZER KIT PLANETARY
NEW MODEL

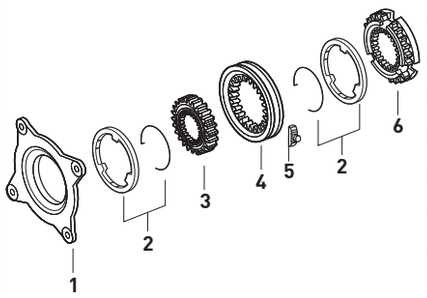


| Fig. | Kacmaz No. | Oem No | Oem Old No | Pcs. | Ürün Tanımı | Description |
|---|---|---|---|---|---|---|
| | K21.06216 | | | Kit | AĞIR SERİ SENK.KİT | SYNCH.KIT PLANETARY |
| 1 | K21.03037 | 947 260 3036 | (947 260 0836) | 1 | TABLA SENKROMENÇ | FOLLOWER RING |
| 2 | K21.03185 | 947 260 0945 | | 2 | AĞIR SERİ FRENLEME (Mo) | SYNCHRONIZING CONE / Mo |
| 3 | K21.03079 | 389 262 4935 | (389 262 2035) | 1 | A.SERİ YILDIZ DİŞLİ 73 DİŞ | SYNCHRONIZER HUB 73 T. |
| 4 | K21.03033 | 945 262 6923 | (930 262 0623) | 1 | AĞIR SERİ HALKA | ENGAGING SLEEVE |
| 5 | K21.03431 | 960 265 0049 | (947 265 0349) | 2 | A.SERİ HİLAL PABUCU | SLIDING PAD |
| 6 | K21.03186 | 945 262 3834 | | 1 | SERİ SENKROMENÇ | ENGAGING RING |

SYNCHRONIZER KIT PLANETARY
NEW MODEL

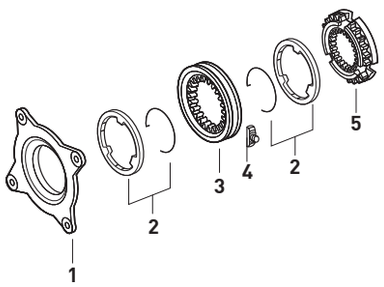


| Fig. | Kacmaz No. | Oem No | Oem Old No | Pcs. | Ürün Tanımı | Description |
|---|---|---|---|---|---|---|
| | K21.06518 | | | Kit | AĞIR SERİ SENK.KİT | SYNCH.KIT PLANETARY |
| 1 | K21.03037 | 947 260 3036 | (947 260 0836) | 1 | TABLA SENKROMENÇ | FOLLOWER RING |
| 2 | K21.03185 | 947 260 0945 | | 2 | AĞIR SERİ FRENLEME (Mo) | SYNCHRONIZING CONE / Mo |
| 3 | K21.03033 | 945 262 6923 | (930 262 0623) | 1 | AĞIR SERİ HALKA | SYNCHRONIZER HUB |
| 4 | K21.03431 | 960 265 0049 | (947 265 0349) | 2 | A.SERİ HİLAL PABUCU | SLIDING PAD |
| 5 | K21.03186 | 945 262 3834 | | 1 | SERİ SENKROMENÇ | ENGAGING RING |

SYNCHRONIZER KIT PLANETARY
NEW MODEL

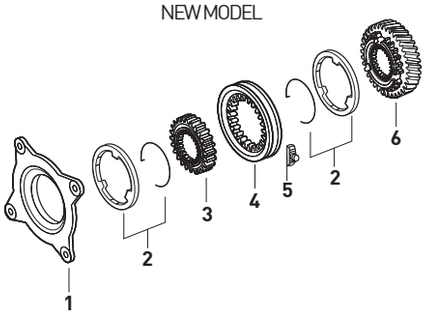


| Fig. | Kacmaz No. | Oem No | Oem Old No | Pcs. | Ürün Tanımı | Description |
|---|---|---|---|---|---|---|
| | K21.07025 | | | Kit | AĞIR SERİ SENK.KİT | SYNCH.KIT PLANETARY |
| 1 | K21.03037 | 947 260 3036 | (947 260 0836) | 1 | TABLA SENKROMENÇ | FOLLOWER RING |
| 2 | K21.03185 | 947 260 0945 | | 2 | AĞIR SERİ FRENLEME (Mo) | SYNCHRONIZING CONE / Mo |
| 3 | K21.03079 | 389 262 4935 | (389 262 2035) | 1 | A.SERİ YILDIZ DİŞLİ 73 DİŞ | SYNCHRONIZER HUB 73 T. |
| 4 | K21.03033 | 945 262 6923 | (930 262 0623) | 1 | AĞIR SERİ HALKA | ENGAGING SLEEVE |
| 5 | K21.03431 | 960 265 0049 | (947 265 0349) | 2 | A.SERİ HİLAL PABUCU | SLIDING PAD |
| 6 | K21.06058 | 930 264 0420 | | 1 | RETARDER DİŞLİSİ | RETARDER GEAR |

SYNCHRONIZER KIT PLANETARY
NEW MODEL

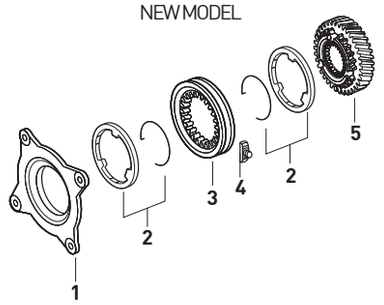


| Fig. | Kacmaz No. | Oem No | Oem Old No | Pcs. | Ürün Tanımı | Description |
|---|---|---|---|---|---|---|
| | K21.06519 | | | Kit | AĞIR SERİ SENK.KİT | SYNCH.KIT PLANETARY |
| 1 | K21.03037 | 947 260 3036 | (947 260 0836) | 1 | TABLA SENKROMENÇ | FOLLOWER RING |
| 2 | K21.03185 | 947 260 0945 | | 2 | AĞIR SERİ FRENLEME (Mo) | SYNCHRONIZING CONE / Mo |
| 3 | K21.03033 | 945 262 6923 | (930 262 0623) | 1 | AĞIR SERİ HALKA | ENGAGING SLEEVE |
| 4 | K21.03431 | 960 265 0049 | (947 265 0349) | 2 | A.SERİ HİLAL PABUCU | SLIDING PAD |
| 5 | K21.06058 | 930 264 0420 | | 1 | RETARDER DİŞLİSİ | RETARDER GEAR |

SYNCHRONIZER KIT PLANETARY
NEW MODEL

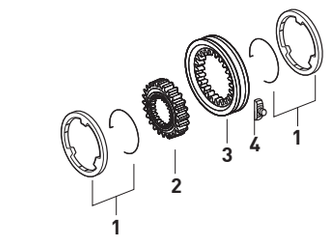


| Fig. | Kacmaz No. | Oem No | Oem Old No | Pcs. | Ürün Tanımı | Description |
|---|---|---|---|---|---|---|
| | K21.06204 | | | Kit | AĞIR SERİ SENK.KİT | SYNCH.KIT PLANETARY |
| 1 | K21.03185 | 947 260 0945 | | 2 | AĞIR SERİ FRENLEME (Mo) | SYNCHRONIZING CONE / Mo |
| 2 | K21.03079 | 389 262 4935 | (389 262 2035) | 1 | A.SERİ YILDIZ DİŞLİ 73 DİŞ | SYNCHRONIZER HUB 73 T. |
| 3 | K21.03033 | 945 262 6923 | (930 262 0623) | 1 | AĞIR SERİ HALKA | ENGAGING SLEEVE |
| 4 | K21.03431 | 960 265 0049 | (947 265 0349) | 2 | A.SERİ HİLAL PABUCU | SLIDING PAD |

SYNCHRONIZER KIT PLANETARY
OLD MODEL

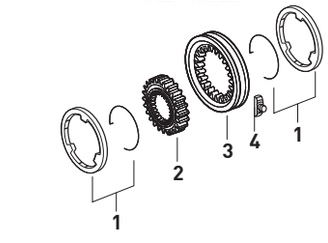


| Fig. | Kacmaz No. | Oem No | Oem Old No | Pcs. | Ürün Tanımı | Description |
|---|---|---|---|---|---|---|
| | K21.06194 | | | Kit | AĞIR SERİ SENK.KİT | SYNCH.KIT PLANETARY |
| 1 | K21.03017 | 389 262 0537 | (389 262 0037) | 2 | AĞIR SERİ FRENLEME (Mo) | SYNCHRONIZING CONE / Mo |
| 2 | K21.03079 | 389 262 4935 | (389 262 2035) | 1 | A.SERİ YILDIZ DİŞLİ 73 DİŞ | SYNCHRONIZER HUB 73 T. |
| 3 | K21.03028 | 945 262 6623 | (945 262 0823) | 1 | AĞIR SERİ HALKA 73 DİŞ | ENGAGING SLEEVE 73 T. |
| | | | (389 262 1623) | | | |
| 4 | K21.03406 | 389 265 2449 | (389 265 1249) | 2 | A.SERİ HİLAL PABUCU | SLIDING PAD |



**Original parts names, oem numbers, symbols and descriptions used in this catalogue are for reference purposes only.**

| Fig. | Kacmaz No. | Oem No | Oem Old No | Pcs. | Ürün Tanımı | Description |
|---|---|---|---|---|---|---|
| | K21.06217 | | | Kit | AĞIR SERİ SENK.KİT | SYNCH.KIT PLANETARY |
| 1 | K21.03018 | 389 260 2036 | | 1 | TABLA SENKROMENÇ | FOLLOWER RING |
| 2 | K21.03017 | 389 262 0537 | (389 262 0037) | 2 | AĞIR SERİ FRENLEME (Mo) | SYNCHRONIZING CONE / Mo |
| 3 | K21.03079 | 389 262 4935 | (389 262 2035) | 1 | A.SERİ YILDIZ DİŞLİ 73 DİŞ | SYNCHRONIZER HUB 73 T. |
| 4 | K21.03028 | 945 262 6623 | (945 262 0823) | 1 | AĞIR SERİ HALKA 73 DİŞ | ENGAGING SLEEVE 73 T. |
| 5 | K21.03406 | 389 265 2449 | (389 265 1249) | 2 | A.SERİ HİLAL PABUCU | SLIDING PAD |
| 6 | K21.03187 | 389 262 9234 | (945 262 1234) | 1 | SERİ SENKROMENÇ | ENGAGING RING |

SYNCHRONIZER KIT PLANETARY
OLD MODEL

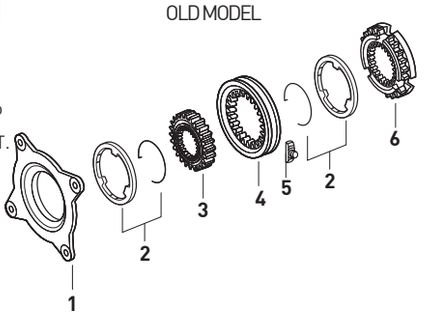


| Fig. | Kacmaz No. | Oem No | Oem Old No | Pcs. | Ürün Tanımı | Description |
|---|---|---|---|---|---|---|
| | K21.07026 | | | Kit | AĞIR SERİ SENK.KİT | SYNCH.KIT PLANETARY |
| 1 | K21.03018 | 389 260 2036 | | 1 | TABLA SENKROMENÇ | FOLLOWER RING |
| 2 | K21.03017 | 389 262 0537 | (389 262 0037) | 2 | AĞIR SERİ FRENLEME (Mo) | SYNCHRONIZING CONE / Mo |
| 3 | K21.03079 | 389 262 4935 | (389 262 2035) | 1 | A.SERİ YILDIZ DİŞLİ 73 DİŞ | SYNCHRONIZER HUB 73 T. |
| 4 | K21.03028 | 945 262 6623 | (945 262 0823) | 1 | AĞIR SERİ HALKA 73 DİŞ | ENGAGING SLEEVE 73 T. |
| 5 | K21.03406 | 389 265 2449 | (389 265 1249) | 2 | A.SERİ HİLAL PABUCU | SLIDING PAD |
| 6 | K21.06059 | 945 264 0420 | (945 264 0220) | 1 | RETARDER DİŞLİSİ | RETARDER GEAR |

SYNCHRONIZER KIT PLANETARY
OLD MODEL

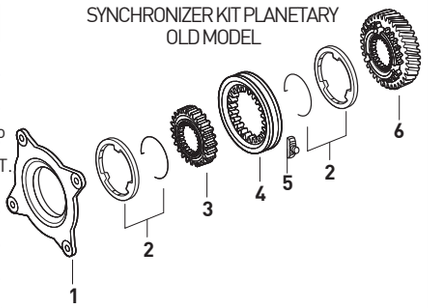


| Fig. | Kacmaz No. | Oem No | Oem Old No | Pcs. | Ürün Tanımı | Description |
|---|---|---|---|---|---|---|
| 1 | K21.06185 | 945 264 0305 | | 1 | PTO MİLİ | INTERM.SHAFT |
| 1 | K21.03496 | 945 264 0805 | (945 264 0505) | 1 | PTO MİLİ | INTERM.SHAFT |
| 1 | K21.03493 | 389 264 0205 | (387 264 0405) | 1 | PTO MİLİ | INTERM.SHAFT |
| 1 | K21.03494 | 387 264 0505 | | 1 | PTO MİLİ | INTERM.SHAFT |
| 2 | | 013 981 0610 | (013 981 0510) | 1 | PTO MİLİ MAS.BİLYA | NEEDLE CAGE |
| 3 | K21.03613 | 004 981 9225 | (004 981 8625) | 1 | PTO MİL BİLYASI | ROLLER BEARING |
| 4 | K21.06964 | 000471 045000 | (003 994 3741) | 1 | PTO MİL SEKMANI | RETAINING RING |
| 5 | | 945 264 0687 | (389 264 0587) | 1 | PTO MİL HALKASI | RING |
| 6 | | 389 264 0223 | | 1 | PTO MİL KOVANI | SLIDING COLLAR |
| 7 | | 000472 080000 | | 1 | PTO SEKMANI | RETAINING RING |
| 8 | | 900055 035301 | | 1 | PTO SEKMANI | RETAINING RING |
| 9 | | 006 981 2525 | (008 981 4125) | 1 | PTO KAPAK BİLYASI | ROLLER BEARING |
| 10 | | 389 264 0780 | (602 264 0280) | 1 | PTO KAPAK CONTASI | GASKET |
| 11 | | 945 264 0611 | | 1 | PTO BAĞ.KAPAĞI | COVER |
| 11 | | 389 264 0311 | | 1 | PTO BAĞ.KAPAĞI | COVER |

P.T.O. (POWER TAKE OFF)

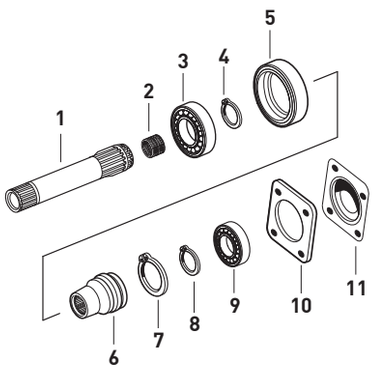


| Fig. | Kacmaz No. | Oem No | Oem Old No | Pcs. | Ürün Tanımı | Description |
|---|---|---|---|---|---|---|
| 1 | K21.03085 | 947 264 0005 | (389 269 0310) | 1 | YAĞ POMPA MİLİ | OIL PUMP SHAFT |
| 1 | K21.03670 | 947 264 0105 | | 1 | YAĞ POMPA MİLİ (RETARDER) | OIL PUMP SHAFT |
| 2 | K21.03511 | 029 997 5748 | | 1 | YAĞ POMPA KAPAK ORİNGİ | O-RING |
| 3 | K21.03558 | 947 264 0287 | | 1 | YAĞ POMPA KAPAĞI | OIL PUMP COVER |
| 4 | K21.03613 | 004 981 9225 | (004 981 8625) | 1 | PTO MİL BİLYASI | ROLLER BEARING |
| 5 | K21.06964 | 000471 045000 | (003 994 3741) | 1 | PTO MİL BİLYA SEKMANI | RETAINING RING |
| 6 | K21.06998 | 017 981 1705 | | 1 | PTO BORU DİŞLİ BİLYASI | ROLLER BEARING |
| 7 | | 947 260 4708 | | 1 | PTO BORU DİŞLİ | GEAR |
| 8 | | 017 981 1805 | | 2 | PTO BORU DİŞLİ BİLYASI | ROLLER BEARING |
| 9 | K21.04334 | 945 264 0006 | | 1 | PTO ARA ADAPTÖR MİLİ | INTERM.SHAFT |
| 10 | | 387 264 3652 | | 2 | BİLYA AYAR RAYNELİ | THRUST WASHER |
| 10 | | 387 264 3752 | | 2 | BİLYA AYAR RAYNELİ | THRUST WASHER |
| 10 | | 387 264 3852 | | 2 | BİLYA AYAR RAYNELİ | THRUST WASHER |
| 11 | | 000988 022010 | | 2 | BİLYA AYAR PULU | THRUST WASHER |
| 12 | K21.04333 | 385 993 5201 | | 1 | YAY | SPRING |
| 13 | | 912009 022100 | | 1 | BİLYA AYAR PUL SEKMANI | RETAINING RING |
| 14 | K21.04332 | 000625 000629 | | 1 | PTO MIL ŞAPKASI | PTO SHAFT CAP |
| 15 | | 016 981 6705 | | 1 | PTO BORU DİŞLİ BİLYASI | ROLLER BEARING |
| 16 | | 947 264 0621 | (947 264 0521) | 1 | PTO BORU DİŞLİ | GEAR |
| 17 | K21.04362 | | | Kit | ARA ADAPTÖR MİLİ KOMPLE | INTERM.SHAFT COMP. |
| 18 | K21.06346 | 970 260 0457 | | Kit | P.T.O VENTİLİ | VALVE |

P.T.O. (POWER TAKE OFF)

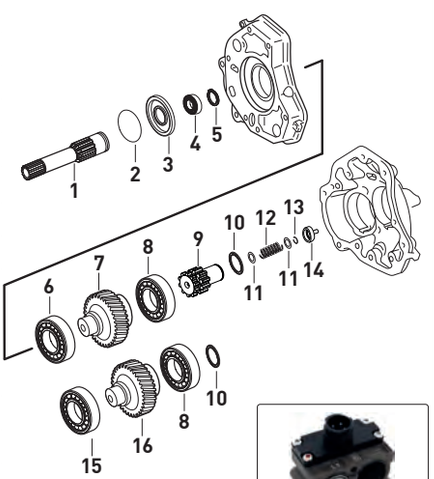





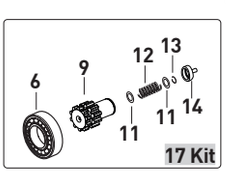




Original parts names, oem numbers, symbols and descriptions used in this catalogue are for reference purposes only.

# GEARBOX G 100-12 / 10.0 - 0,82

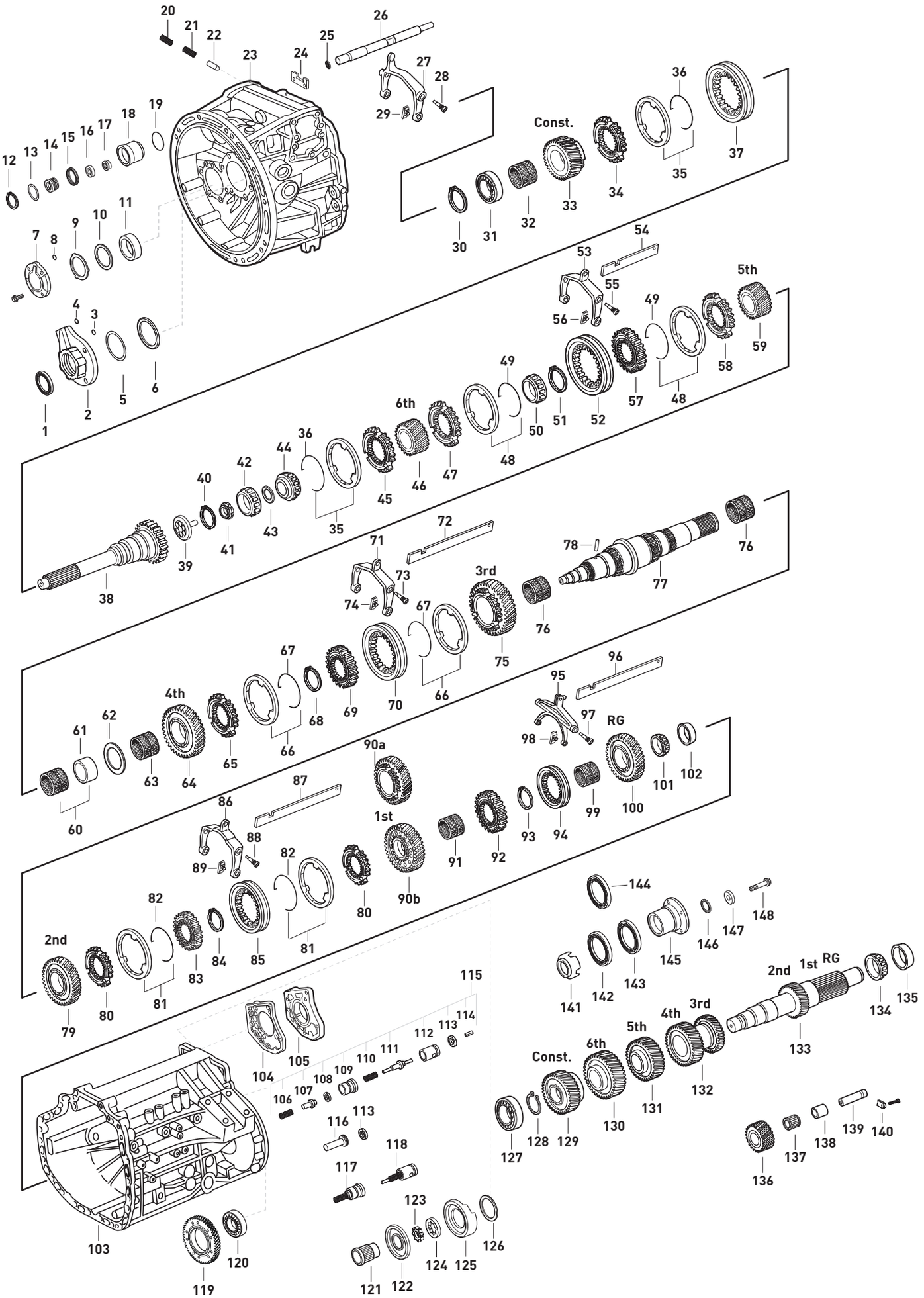




Original parts names, oem numbers, symbols and descriptions used in this catalogue are for reference purposes only.

| Fig. | Kacmaz No | Oem No | Oem Old No | Pcs. | Ürün Tanımı | Description | Sizes | Not | G100-12 |
|---|---|---|---|---|---|---|---|---|---|
| 1 | K21.03521 | 015 997 1647 | (015 997 0647) | 1 | PRİZDİREK KEÇESİ | OIL SEAL | 52X68X8mm | | ♦ |
| | | | (024 997 2147) | | | | | | |
| 2 | K21.03455 | 976 261 0218 | (976 261 0318) | 1 | PRİZDİREK KEÇE KAPAĞI | COVER | | | ♦ |
| 3 | K21.06637 | 019 997 8348 | (020 997 7948) | 1 | PRİZDİREK KEÇE KAPAK ORİNGİ | O-RING | 14X4mm | | ♦ |
| 4 | K21.06636 | 015 997 4048 | (020 997 8748) | 1 | PRİZDİREK KEÇE KAPAK ORİNGİ | O-RING | 5X3mm | | ♦ |
| 5 | K21.06635 | 020 997 7848 | | 1 | PRİZDİREK KEÇE KAPAK ORİNGİ | O-RING | 138X3mm | | ♦ |
| 5 | K21.06712 | 028 997 2248 | (019 997 7248) | 1 | PRİZDİREK KEÇE KAPAK ORİNGİ | O-RING | 140X3mm | | ♦ |
| 6 | K21.04162 | 389 262 4152 | (389 262 0955) | 1 | PRİZDİREK AYAR RAYNELİ | THRUST WASHER | 0,10mm | | ♦ |
| 6 | K21.04243 | 389 262 0855 | | 1 | PRİZDİREK AYAR RAYNELİ | THRUST WASHER | 0,15mm | | ♦ |
| 6 | K21.04151 | 389 262 0755 | | 1 | PRİZDİREK AYAR RAYNELİ | THRUST WASHER | 0,20mm | | ♦ |
| 6 | K21.06715 | 389 262 3055 | | 1 | PRİZDİREK AYAR RAYNELİ | THRUST WASHER | 0,25mm | | ♦ |
| 6 | K21.04221 | 389 262 3255 | | 1 | PRİZDİREK AYAR RAYNELİ | THRUST WASHER | 0,31mm | | ♦ |
| 6 | K21.04163 | 389 262 3555 | (389 262 0655) | 1 | PRİZDİREK AYAR RAYNELİ | THRUST WASHER | 0,40mm | | ♦ |
| | | | (389 262 4452) | | | | | | |
| 6 | K21.04164 | 389 262 3755 | (389 262 1954) | 1 | PRİZDİREK AYAR RAYNELİ | THRUST WASHER | 0,46mm | | ♦ |
| 6 | K21.04246 | 389 262 3855 | | 1 | PRİZDİREK AYAR RAYNELİ | THRUST WASHER | 0,49mm | | ♦ |
| 6 | K21.04250 | 389 262 4055 | (389 262 0155) | 1 | PRİZDİREK AYAR RAYNELİ | THRUST WASHER | 0,55mm | | ♦ |
| | | | (389 262 2154) | | | | | | |
| 6 | K21.04167 | 389 262 4255 | (389 262 2254) | 1 | PRİZDİREK AYAR RAYNELİ | THRUST WASHER | 0,61mm | | ♦ |
| 6 | K21.04168 | 389 262 4355 | (389 262 2354) | 1 | PRİZDİREK AYAR RAYNELİ | THRUST WASHER | 0,64mm | | ♦ |
| 6 | K21.04169 | 389 262 4555 | (389 262 2454) | 1 | PRİZDİREK AYAR RAYNELİ | THRUST WASHER | 0,70mm | | ♦ |
| 6 | K21.04170 | 389 262 4755 | (389 262 2554) | 1 | PRİZDİREK AYAR RAYNELİ | THRUST WASHER | 0,76mm | | ♦ |
| 6 | K21.04281 | 389 262 4855 | (389 262 0555) | 1 | PRİZDİREK AYAR RAYNELİ | THRUST WASHER | 0,79mm | | ♦ |
| 6 | K21.04282 | 389 262 5555 | | 1 | PRİZDİREK AYAR RAYNELİ | THRUST WASHER | 1,00mm | | ♦ |
| 6 | | 976 262 5352 | | 1 | PRİZDİREK ÖN BİLYA RAYNELİ | THRUST WASHER | 1,15mm | | ♦ |
| 6 | | 976 262 5852 | | 1 | PRİZDİREK ÖN BİLYA RAYNELİ | THRUST WASHER | 1,30mm | | ♦ |
| 6 | | 976 262 6352 | | 1 | PRİZDİREK ÖN BİLYA RAYNELİ | THRUST WASHER | 1,45mm | | ♦ |
| 6 | | 976 262 6552 | | 1 | PRİZDİREK ÖN BİLYA RAYNELİ | THRUST WASHER | 1,51mm | | ♦ |
| 6 | | 976 262 6852 | | 1 | PRİZDİREK ÖN BİLYA RAYNELİ | THRUST WASHER | 1,60mm | | ♦ |
| 6 | | 976 262 7152 | | 1 | PRİZDİREK ÖN BİLYA RAYNELİ | THRUST WASHER | 1,69mm | | ♦ |
| 6 | | 976 262 7352 | | 1 | PRİZDİREK ÖN BİLYA RAYNELİ | THRUST WASHER | 1,75mm | | ♦ |
| 6 | | 976 262 7552 | | 1 | PRİZDİREK ÖN BİLYA RAYNELİ | THRUST WASHER | 1,81mm | | ♦ |
| 6 | | 976 262 7852 | | 1 | PRİZDİREK ÖN BİLYA RAYNELİ | THRUST WASHER | 1,90mm | | ♦ |
| 6 | K21.04171 | 389 262 9654 | (389 262 2654) | 1 | PRİZDİREK AYAR RAYNELİ | THRUST WASHER | 2,00mm | | ♦ |
| 7 | | 976 261 1833 | (976 261 1733) | 1 | GRUP MİLİ BİLYA KAPAĞI | COVER | | (1) | ♦ |
| | | | (976 261 1633) | | | | | | |
| 7 | | 976 261 1133 | | 1 | GRUP MİLİ BİLYA KAPAĞI | COVER | | (2) | ♦ |
| 8 | K21.06636 | 015 997 4048 | (020 997 8748) | 1 | GRUP MİLİ BİLYA KAPAK ORİNGİ | O-RING | 5X3mm | | ♦ |
| 9 | K21.06533 | 028 997 2348 | (004 997 2248) | 1 | GRUP MİLİ BİLYA KAPAK ORİNGİ | O-RING | 100X3mm | (1) | ♦ |
| 9 | | 022 997 4048 | (022 997 3448) | 1 | GRUP MİLİ BİLYA KAPAK ORİNGİ | O-RING | 103X2mm | (2) | ♦ |
| 10 | K21.04192 | 406 337 0252 | | 1 | GRUP MİLİ ÖN BİLYA RAYNELİ | THRUST WASHER | 0,10mm | | ♦ |
| 10 | K21.04150 | 406 337 0352 | | 1 | GRUP MİLİ ÖN BİLYA RAYNELİ | THRUST WASHER | 0,20mm | | ♦ |
| 10 | K21.94150 | | | 1 | GRUP MİLİ ÖN BİLYA RAYNELİ | THRUST WASHER | 0,25mm | | ♦ |
| 10 | K21.04338 | 406 337 0452 | | 1 | GRUP MİLİ ÖN BİLYA RAYNELİ | THRUST WASHER | 0,30mm | | ♦ |
| 10 | K21.04196 | 389 263 5352 | (389 263 3252) | 1 | GRUP MİLİ ÖN BİLYA RAYNELİ | THRUST WASHER | 0,40mm | | ♦ |
| 10 | K21.04194 | 389 263 3352 | | 1 | GRUP MİLİ ÖN BİLYA RAYNELİ | THRUST WASHER | 0,45mm | | ♦ |
| 10 | K21.06719 | 389 263 5652 | | 1 | GRUP MİLİ ÖN BİLYA RAYNELİ | THRUST WASHER | 0,49mm | | ♦ |
| 10 | K21.04197 | 389 263 5852 | (389 263 3552) | 1 | GRUP MİLİ ÖN BİLYA RAYNELİ | THRUST WASHER | 0,55mm | | ♦ |
| 10 | K21.04340 | 389 263 6052 | | 1 | GRUP MİLİ ÖN BİLYA RAYNELİ | THRUST WASHER | 0,61mm | | ♦ |
| 10 | K21.04198 | 389 263 6352 | (389 263 3852) | 1 | GRUP MİLİ ÖN BİLYA RAYNELİ | THRUST WASHER | 0,70mm | | ♦ |
| 10 | K21.04154 | 389 263 3952 | | 1 | GRUP MİLİ ÖN BİLYA RAYNELİ | THRUST WASHER | 0,75mm | | ♦ |
| 10 | K21.04199 | 389 263 6852 | | 1 | GRUP MİLİ ÖN BİLYA RAYNELİ | THRUST WASHER | 0,85mm | | ♦ |
| 10 | K21.04200 | 389 263 7352 | | 1 | GRUP MİLİ ÖN BİLYA RAYNELİ | THRUST WASHER | 1,00mm | | ♦ |

NOTES :
Parts encoded alphabetic and numaric are used together.

NOTLAR :
Alfabetik ve rakam ile kodlanan parçalar birlikte kullanılır.





Original parts names, oem numbers, symbols and descriptions used in this catalogue are for reference purposes only.

# GEARBOX G 100-12 / 10.0 - 0,82

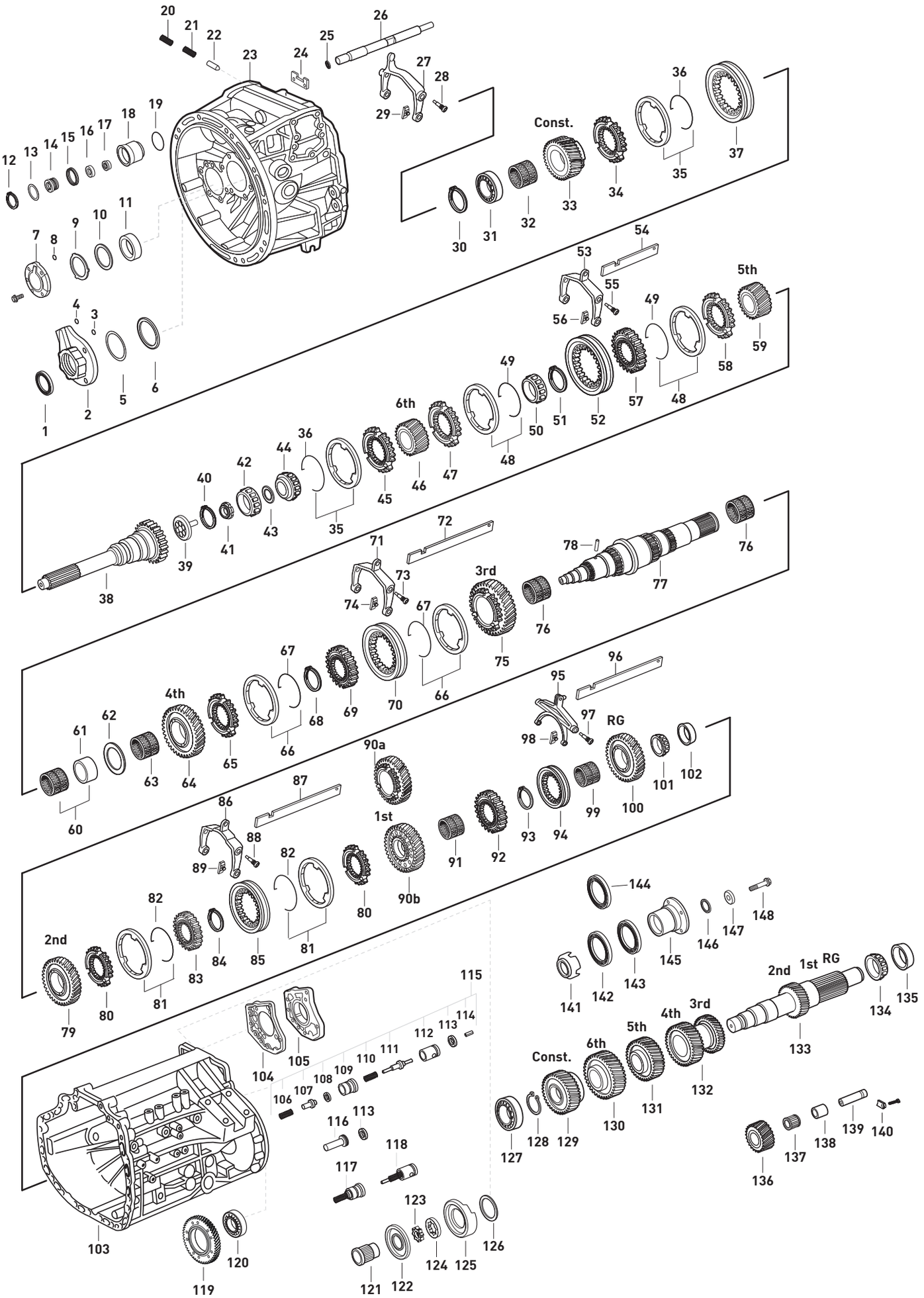




Original parts names, oem numbers, symbols and descriptions used in this catalogue are for reference purposes only.

| Fig. | Kacmaz No | Oem No | Oem Old No | Pcs. | Ürün Tanımı | Description | Sizes | Not | G100-12 |
|---|---|---|---|---|---|---|---|---|---|
| 10 | K21.04201 | 389 263 7852 | | 1 | GRUP MİLİ ÖN BİLYA RAYNELİ | THRUST WASHER | 1,15mm | | ♦ |
| 10 | K21.04202 | 389 263 8352 | | 1 | GRUP MİLİ ÖN BİLYA RAYNELİ | THRUST WASHER | 1,30mm | | ♦ |
| 11 | | 945 264 0051 | | 1 | GRUP MİLİ ÖN BİLYA PULU | THRUST WASHER | | | ♦ |
| 12 | | 006 994 4241 | (000472 065001) | 1 | TAKVİYE PİSTON SEKMANI | RETAINING RING | 65X2,5mm | | ♦ |
| 13 | K21.04233 | 389 262 2555 | | 1 | TAKVİYE SİLİNDİR PULU | SPACER WASHER | 0,70mm | | ♦ |
| 13 | K21.04234 | 389 262 2655 | | 1 | TAKVİYE SİLİNDİR PULU | SPACER WASHER | 0,90mm | | ♦ |
| 13 | K21.04112 | 389 262 3254 | | 1 | TAKVİYE SİLİNDİR PULU | SPACER WASHER | 1,05mm | | ♦ |
| 13 | K21.04111 | 389 262 3354 | | 1 | TAKVİYE SİLİNDİR PULU | SPACER WASHER | 1,10mm | | ♦ |
| 13 | K21.04109 | 389 262 3554 | | 1 | TAKVİYE SİLİNDİR PULU | SPACER WASHER | 1,20mm | | ♦ |
| 13 | K21.04105 | 389 262 2052 | | 1 | TAKVİYE SİLİNDİR PULU | SPACER WASHER | 1,40mm | | ♦ |
| 13 | K21.04093 | 389 262 2355 | | 1 | TAKVİYE SİLİNDİR PULU | SPACER WASHER | 1,79mm | | ♦ |
| 13 | K21.04025 | 389 262 3252 | | 1 | TAKVİYE SİLİNDİR PULU | SPACER WASHER | 2,00mm | | ♦ |
| 13 | K21.04024 | 389 262 3352 | | 1 | TAKVİYE SİLİNDİR PULU | SPACER WASHER | 2,50mm | | ♦ |
| 14 | K21.06994 | 945 267 0218 | (387 267 0918) | 1 | TAKVİYE MİL PİSTONU | PISTON | | | ♦ |
| | | | (387 267 0618) | | | | | | |
| 15 | K21.03524 | 006 997 6447 | (020 997 6647) | 1 | TAKVİYE HAVA KEÇESİ | OIL SEAL | 41X48X11,5mm | | ♦ |
| | | | (012 997 3347) | | | | | | |
| 16 | K21.04178 | 387 267 0650 | (387 267 0250) | 1 | TAKVİYE SİLİNDİR BURCU | BUSHING | 34X22X8mm | | ♦ |
| 17 | K21.03523 | 000 267 0197 | (000 267 0397) | 1 | TAKVİYE HİLAL MİL KEÇESİ | OIL SEAL | 22X32X8mm | | ♦ |
| 18 | K21.06036 | 945 267 0819 | (945 267 0119) | 1 | TAKVİYE SİLİNDİR GÖVDESİ | CYLINDER | | | ♦ |
| | | | (945 267 0719) | | | | | | |
| | | | (945 267 0019) | | | | | | |
| 19 | K21.06534 | 022 997 4248 | | 1 | TAKVİYE SİLİNDİR ORİNGİ | O-RING | 55,6X3mm | | ♦ |
| 20 | K21.06015 | 387 993 4501 | | 1 | ŞANZ.TAKVİYE KİLİT FİŞEK YAYI | SPRING | 6,2X63mm | | ♦ |
| 21 | K21.03500 | 387 993 4401 | (387 993 2501) | 1 | KİLİT YAYI | SPRING | 9,8X63,3mm | | ♦ |
| 22 | K21.03492 | 389 267 1174 | (387 267 0074) | 1 | KİLİT FİŞEĞİ | PIN | | | ♦ |
| 23 | | 976 260 0023 | | 1 | ŞANZIMAN ÖN GÖVDE | HOUSING | | | ♦ |
| 24 | | 976 267 0959 | | 1 | VİTES HİLAL ÇITA KİLİTLEMESİ | BRACKET | | | ♦ |
| 25 | K21.04160 | 387 263 2652 | | 1 | TAKVİYE HİLAL MİL PULU | SPACER WASHER | 0,20mm | | ♦ |
| 25 | K21.04161 | 387 263 2752 | | 1 | TAKVİYE HİLAL MİL PULU | SPACER WASHER | 0,40mm | | ♦ |
| 25 | | 387 263 2852 | | 1 | TAKVİYE HİLAL MİL PULU | SPACER WASHER | 0,60mm | | ♦ |
| 25 | | 387 263 3052 | | 1 | TAKVİYE HİLAL MİL PULU | SPACER WASHER | 1,00mm | | ♦ |
| 26 | | 976 267 0317 | | 1 | TAKVİYE HİLAL MİLİ | GEAR SHIFT RAIL | | | ♦ |
| 27 | K21.06410 | 945 265 0001 | | 1 | TAKVİYE HİLALİ | GEAR SHIFT FORK | | | ♦ |
| 28 | K21.04307 | 960 265 0774 | (945 265 1274) | 2 | HİLAL CİVATASI | PIN | | | ♦ |
| | | | (945 265 2974) | | | | | | |
| | | | (945 265 2774) | | | | | | |
| 29 | K21.03431 | 960 265 0049 | (947 265 0349) | 2 | TAKVİYE HİLAL PABUCU | SLIDING PAD | | | ♦ |
| | | | (389 265 2749) | | | | | | |
| 30 | K21.04361 | 976 262 0173 | | 1 | PRİZDİREK ÖN BİLYA SEKMANI | RETAINING RING | 2,00mm | | ♦ |
| 30 | K21.06956 | 976 262 0373 | | 1 | PRİZDİREK ÖN BİLYA SEKMANI | RETAINING RING | 2,10mm | | ♦ |
| 30 | K21.06957 | 976 262 0573 | | 1 | PRİZDİREK ÖN BİLYA SEKMANI | RETAINING RING | 2,20mm | | ♦ |
| 30 | K21.06958 | 976 262 0773 | | 1 | PRİZDİREK ÖN BİLYA SEKMANI | RETAINING RING | 2,30mm | | ♦ |
| 30 | K21.06959 | 976 262 3473 | | 1 | PRİZDİREK ÖN BİLYA SEKMANI | RETAINING RING | 2,40mm | | ♦ |
| 30 | K21.06960 | 976 262 3673 | | 1 | PRİZDİREK ÖN BİLYA SEKMANI | RETAINING RING | 2,50mm | | ♦ |
| 31 | K21.03601 | 014 981 3905 | (013 981 9905) | 1 | PRİZDİREK ÖN BİLYA | ROLLER BEARING | 57,17X140X28,25mm | | ♦ |
| | | | (013 981 8205) | | | | | | |
| | | | (013 981 8505) | | | | | | |
| | | | (014 981 1005) | | | | | | |
| 32 | K21.03801 | 017 981 4510 | (018 981 0510) | 1 | TAKVİYE MASURA BİLYA | NEEDLE CAGE | 67X75X37mm | | ♦ |
| | | | (017 981 7610) | | | | | | |
| | | | (018 981 1610) | | | | | | |
| | | | (018 981 7810) | | | | | | |

NOTES :
Parts encoded alphabetic and numaric are used together.

NOTLAR :
Alfabetik ve rakam ile kodlanan parçalar birlikte kullanılır.





Original parts names, oem numbers, symbols and descriptions used in this catalogue are for reference purposes only.

# GEARBOX G 100-12 / 10.0 - 0,82

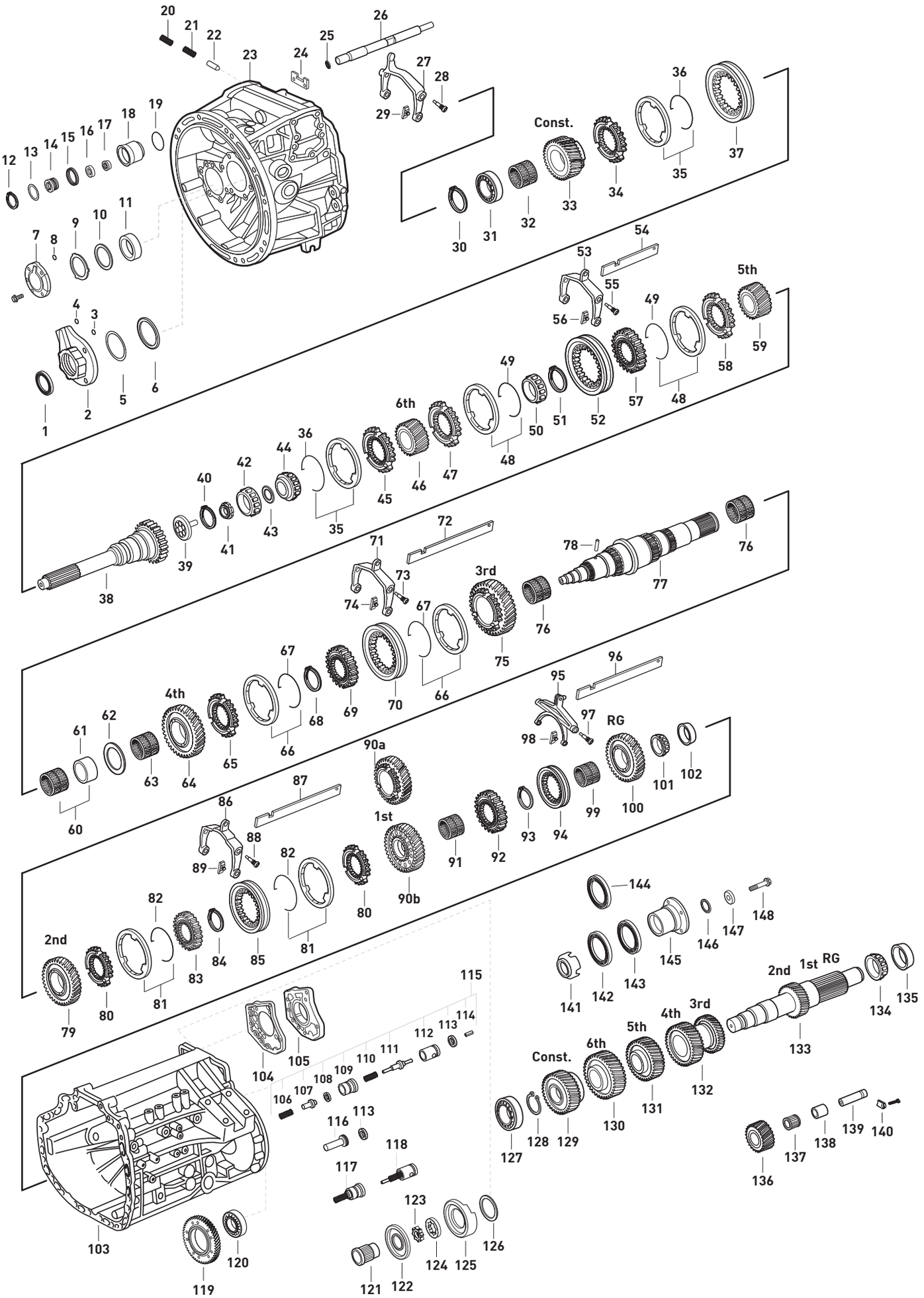




Original parts names, oem numbers, symbols and descriptions used in this catalogue are for reference purposes only.

| Fig. | Kacmaz No | Oem No | Oem Old No | Pcs. | Ürün Tanımı | Description | Sizes | Not | G100-12 |
|---|---|---|---|---|---|---|---|---|---|
| 33 | K21.03238 | 976 262 0210 | (976 262 2210) | 1 | TAKVİYE DİŞLİSİ 26 DİŞ | CONSTANT GEAR 26 T. | | | ♦ |
| 34 | K21.03003 | 389 262 1134 | | 1 | TAKVİYE SENKROMENÇ | ENGAGING RING | | | ♦ |
| 35 | K21.03015 | 389 262 0637 | (387 262 0837) | 2 | TAKVİYE FRENLEME (Mo) | SYNCHRONIZING CONE / Mo | | | ♦ |
| | | | (389 262 1037) | | | | | | |
| 35 | K21.03401 | 945 260 0450 | | 2 | TAKVİYE FRENLEME (C) | SYNCHRONIZING CONE / C | | | ♦ |
| 36 | K21.03044 | 387 262 1093 | (387 262 0693) | 2 | FRENLEME TELİ | SPRING | | | ♦ |
| | | | (960 262 1393) | | | | | | |
| 37 | K21.03002 | 945 262 2823 | (945 262 0323) | 1 | TAKVİYE HALKA | ENGAGING SLEEVE | | | ♦ |
| | | | (945 262 0623) | | | | | | |
| | | | (389 262 4123) | | | | | | |
| | | | (389 262 2723) | | | | | | |
| 38 | K21.03001 | 976 262 2501 | (976 262 2401) | 1 | PRİZDİREK 60 DİŞ | INPUT SHAFT 60 T. | | | ♦ |
| 38 | K21.03240 | 976 262 2101 | (976 262 2001) | 1 | PRİZDİREK 60 DİŞ | INPUT SHAFT 60 T. | | | ♦ |
| 39 | K21.04001 | 976 269 0034 | (960 269 0434) | 1 | PRİZDİREK YAĞ PİPETİ | OIL COLLECTOR | | | ♦ |
| 40 | K21.04002 | 000 994 9841 | | 1 | PRİZDİREK YAĞ PİPET SEKMANI | RETAINING RING | | | ♦ |
| 41 | K21.04004 | 976 990 0150 | | 1 | KAMALI MİL SOMUNU | NUT | | (A) | ♦ |
| 41 | | 976 990 0050 | | 1 | KAMALI MİL SOMUNU | NUT | | (B) | ♦ |
| 42 | K21.03602 | 012 981 2805 | | 1 | KAMALI MİL UÇ BİLYA | ROLLER BEARING | 32X29,5mm | | ♦ |
| 43 | K21.04005 | 976 262 5152 | | 1 | KAMALI MİL AYAR PULU | THRUST WASHER | 1,50mm | | ♦ |
| 43 | K21.04006 | 976 262 5052 | | 1 | KAMALI MİL AYAR PULU | THRUST WASHER | 1,47mm | | ♦ |
| 43 | K21.04007 | 976 262 4952 | | 1 | KAMALI MİL AYAR PULU | THRUST WASHER | 1,44mm | | ♦ |
| 43 | K21.04008 | 976 262 4852 | | 1 | KAMALI MİL AYAR PULU | THRUST WASHER | 1,41mm | | ♦ |
| 43 | K21.04009 | 976 262 4752 | | 1 | KAMALI MİL AYAR PULU | THRUST WASHER | 1,38mm | | ♦ |
| 43 | K21.04011 | 976 262 4652 | | 1 | KAMALI MİL AYAR PULU | THRUST WASHER | 1,35mm | | ♦ |
| 43 | K21.04012 | 976 262 4552 | | 1 | KAMALI MİL AYAR PULU | THRUST WASHER | 1,32mm | | ♦ |
| 43 | K21.04013 | 976 262 4452 | | 1 | KAMALI MİL AYAR PULU | THRUST WASHER | 1,29mm | | ♦ |
| 43 | K21.04014 | 976 262 4352 | | 1 | KAMALI MİL AYAR PULU | THRUST WASHER | 1,26mm | | ♦ |
| 43 | K21.04015 | 976 262 4252 | | 1 | KAMALI MİL AYAR PULU | THRUST WASHER | 1,23mm | | ♦ |
| 43 | K21.04016 | 976 262 4152 | | 1 | KAMALI MİL AYAR PULU | THRUST WASHER | 1,20mm | | ♦ |
| 43 | K21.04017 | 976 262 4052 | | 1 | KAMALI MİL AYAR PULU | THRUST WASHER | 1,17mm | | ♦ |
| 43 | K21.04018 | 976 262 3952 | | 1 | KAMALI MİL AYAR PULU | THRUST WASHER | 1,14mm | | ♦ |
| 43 | K21.04019 | 976 262 3852 | | 1 | KAMALI MİL AYAR PULU | THRUST WASHER | 1,11mm | | ♦ |
| 43 | K21.04020 | 976 262 3752 | | 1 | KAMALI MİL AYAR PULU | THRUST WASHER | 1,08mm | | ♦ |
| 43 | K21.04021 | 976 262 3652 | | 1 | KAMALI MİL AYAR PULU | THRUST WASHER | 1,05mm | | ♦ |
| 43 | K21.04022 | 976 262 3552 | | 1 | KAMALI MİL AYAR PULU | THRUST WASHER | 1,02mm | | ♦ |
| 43 | K21.04023 | 976 262 3452 | | 1 | KAMALI MİL AYAR PULU | THRUST WASHER | 0,99mm | | ♦ |
| 43 | K21.04294 | 976 262 3352 | | 1 | KAMALI MİL AYAR PULU | THRUST WASHER | 0,96mm | | ♦ |
| 43 | K21.04295 | 976 262 3252 | | 1 | KAMALI MİL AYAR PULU | THRUST WASHER | 0,93mm | | ♦ |
| 43 | K21.04296 | 976 262 3152 | | 1 | KAMALI MİL AYAR PULU | THRUST WASHER | 0,90mm | | ♦ |
| 43 | K21.04297 | 976 262 3052 | | 1 | KAMALI MİL AYAR PULU | THRUST WASHER | 0,87mm | | ♦ |
| 43 | K21.04298 | 976 262 2952 | | 1 | KAMALI MİL AYAR PULU | THRUST WASHER | 0,84mm | | ♦ |
| 43 | K21.04029 | 976 262 2852 | | 1 | KAMALI MİL AYAR PULU | THRUST WASHER | 0,81mm | | ♦ |
| 43 | K21.94299 | | | 1 | KAMALI MİL AYAR PULU | THRUST WASHER | 0,10mm | | ♦ |
| 43 | K21.04299 | | | 1 | KAMALI MİL AYAR PULU | THRUST WASHER | 0,20mm | | ♦ |
| 43 | K21.84299 | | | 1 | KAMALI MİL AYAR PULU | THRUST WASHER | 0,30mm | | ♦ |
| 43 | K21.74299 | | | 1 | KAMALI MİL AYAR PULU | THRUST WASHER | 0,40mm | | ♦ |
| 44 | K21.03603 | 013 981 0305 | (012 981 3405) | 1 | 6.VİTES DİŞLİSİ ÖN BİLYA | ROLLER BEARING | 38,1X29,77mm | | ♦ |
| | | | (012 981 4905) | | | | | | |
| | | | (012 981 7005) | | | | | | |
| | | | (014 981 1705) | | | | | | |
| 45 | K21.03005 | 976 262 2834 | (976 262 0534) | 1 | TAKVİYE SENKROMENÇ | ENGAGING RING | | | ♦ |
| 46 | K21.03006 | 976 262 1510 | (976 262 2310) | 1 | 6.VİTES DİŞLİSİ 23 DİŞ | GEAR 6th 23 T | | | ♦ |
| 47 | K21.03005 | 976 262 2834 | (976 262 0534) | 1 | 6.VİTES SENKROMENÇ | ENGAGING RING | | | ♦ |

NOTES :
Parts encoded alphabetic and numaric are used together.

NOTLAR :
Alfabetik ve rakam ile kodlanan parçalar birlikte kullanılır.





Original parts names, oem numbers, symbols and descriptions used in this catalogue are for reference purposes only.

# GEARBOX G 100-12 / 10.0 - 0,82

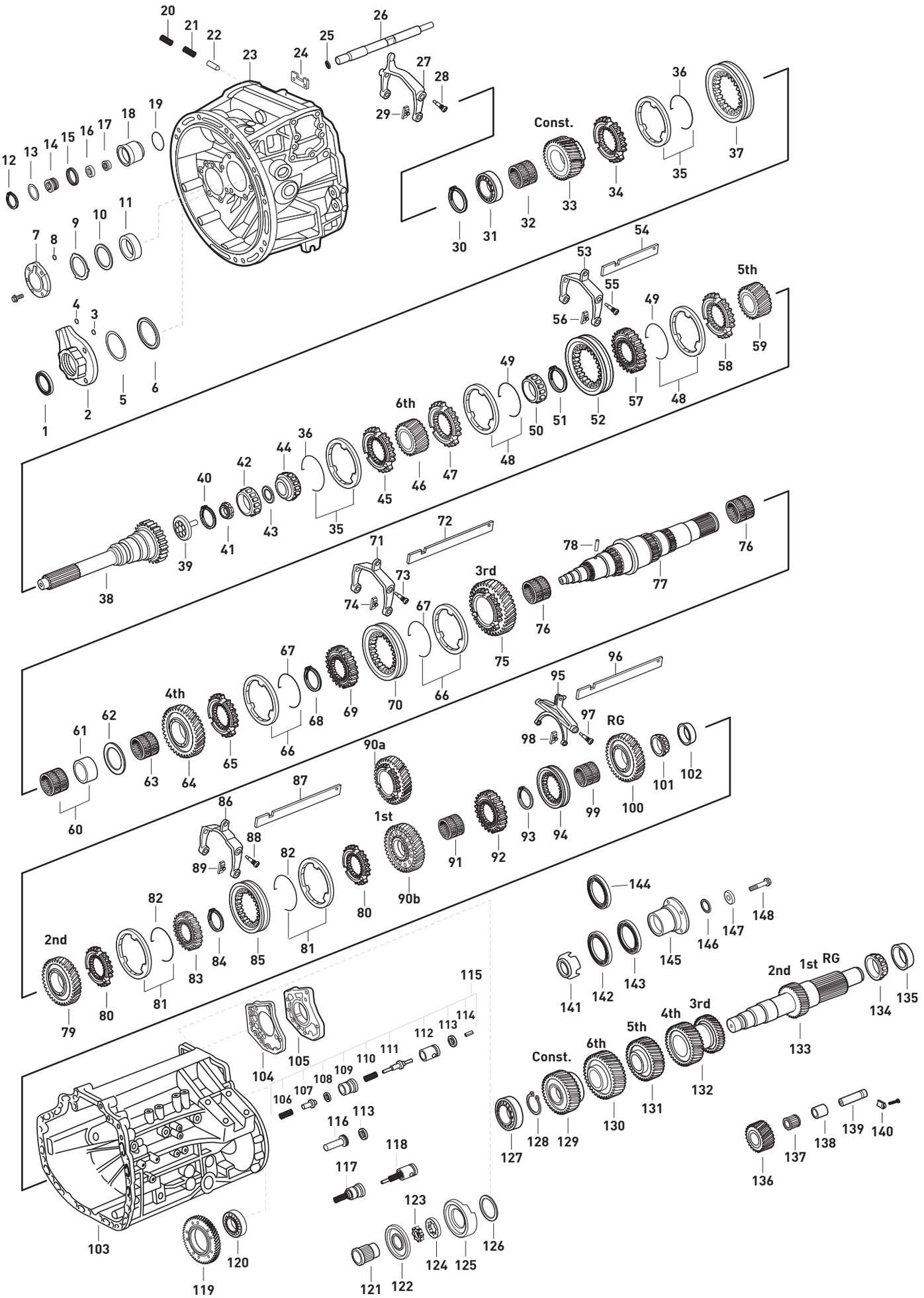




Original parts names, oem numbers, symbols and descriptions used in this catalogue are for reference purposes only.

| Fig. | Kacmaz No | Oem No | Oem Old No | Pcs. | Ürün Tanımı | Description | Sizes | Not | G100-12 |
|---|---|---|---|---|---|---|---|---|---|
| 48 | K21.03015 | 389 262 0637 | (387 262 0837) | 2 | 5./6.VİTES FRENLEME (Mo) | SYNCHRONIZING CONE / Mo | | | ♦ |
| 48 | K21.03401 | 945 260 0450 | | 2 | 5./6.VİTES FRENLEME (C) | SYNCHRONIZING CONE / C | | | ♦ |
| 49 | K21.03044 | 387 262 1093 | (387 262 0693) | 2 | FRENLEME TELİ | SPRING | | | ♦ |
| | | | (960 262 1393) | | | | | | |
| 50 | K21.03604 | 013 981 0405 | (012 981 3505) | 1 | 6.VİTES DİŞLİSİ ARKA BİLYA | ROLLER BEARING | 45,98X18mm | | ♦ |
| | | | (012 981 5005) | | | | | | |
| | | | (012 981 7105) | | | | | | |
| | | | (013 981 0705) | | | | | | |
| | | | (014 981 1805) | | | | | | |
| 51 | K21.04361 | 976 262 0173 | | 1 | 5./6.VİTES YILDIZ DİŞLİ SEKMANI | RETAINING RING | 2,00mm | | ♦ |
| 51 | K21.06956 | 976 262 0373 | | 1 | 5./6.VİTES YILDIZ DİŞLİ SEKMANI | RETAINING RING | 2,10mm | | ♦ |
| 51 | K21.06957 | 976 262 0573 | | 1 | 5./6.VİTES YILDIZ DİŞLİ SEKMANI | RETAINING RING | 2,20mm | | ♦ |
| 51 | K21.06958 | 976 262 0773 | | 1 | 5./6.VİTES YILDIZ DİŞLİ SEKMANI | RETAINING RING | 2,30mm | | ♦ |
| 52 | K21.03002 | 945 262 2823 | (945 262 0323) | 1 | 5./6.VİTES HALKA | ENGAGING SLEEVE | | | ♦ |
| | | | (945 262 0623) | | | | | | |
| | | | (389 262 4123) | | | | | | |
| | | | (389 262 2723) | | | | | | |
| 53 | | 976 260 0530 | | 1 | 5./6.VİTES HİLALİ | GEAR SHIFT FORK | | | ♦ |
| 54 | | 976 265 0704 | (976 265 0804) | 1 | 5./6.VİTES HİLAL ÇITASI | SHIFTING ROD | | | ♦ |
| 55 | K21.04307 | 960 265 0774 | (945 265 1274) | 2 | HİLAL CİVATASI | PIN | | | ♦ |
| | | | (945 265 2974) | | | | | | |
| | | | (945 265 2774) | | | | | | |
| 56 | K21.03431 | 960 265 0049 | (947 265 0349) | 2 | 5./6.VİTES HİLAL PABUCU | SLIDING PAD | | | ♦ |
| | | | (389 265 2749) | | | | | | |
| 57 | K21.03243 | 389 262 1935 | | 1 | 5./6.VİTES YILDIZ DİŞLİ 60 DİŞ | SYNCHRONIZER HUB 60 T. | | | ♦ |
| 58 | K21.03007 | 945 262 4034 | (389 262 5334) | 1 | 5.VİTES SENKROMENÇ | ENGAGING RING | | | ♦ |
| | | | (945 262 4434) | | | | | | |
| 59 | K21.03244 | 976 262 1515 | (976 262 1615) | 1 | 5.VİTES DİŞLİSİ 28 DİŞ | GEAR 5th 28 T. | | | ♦ |
| | | | (976 262 0915) | | | | | | |
| | | | (976 262 0015) | | | | | | |
| 60 | K21.03802 | 001 981 6212 | (001 981 3512) | 1 | 5.VİTES MASURA BİLYA | NEEDLE CAGE | 63X78X52mm | | ♦ |
| | | | (017 981 7710) | | | | | | |
| | | | (019 981 4710) | | | | | | |
| | | | (018 981 0910) | | | | | | |
| 61 | K21.03245 | 976 262 0350 | | 1 | 5.VİTES MASURA BİLYA ÇANAĞI | BEARING RACE | 70X63X52mm | | ♦ |
| 62 | K21.04030 | 976 262 0052 | | 1 | 4./5.VİTES ARA AYAR PULU | THRUST WASHER | 100X63X6mm | | ♦ |
| 63 | K21.03803 | 009 981 1510 | (017 981 7810) | 1 | 4.VİTES MASURA BİLYA | NEEDLE CAGE | 78X86X35mm | | ♦ |
| | | | (008 981 9310) | | | | | | |
| | | | (012 981 9110) | | | | | | |
| 64 | K21.03247 | 389 262 0814 | (976 262 0814) | 1 | 4.VİTES DİŞLİSİ 35 DİŞ | GEAR 4th 35 T. | | | ♦ |
| | | | (389 262 0114) | | | | | | |
| | | | (389 262 0914) | | | | | | |
| | | | (389 262 0614) | | | | | | |
| | | | (389 262 1114) | | | | | | |
| | | | (389 262 0414) | | | | | | |
| | | | (389 262 0214) | | | | | | |
| 65 | K21.03024 | 389 262 5434 | (945 262 0334) | 1 | 4.VİTES SENKROMENÇ | ENGAGING RING | | | ♦ |
| | | | (945 262 0134) | | | | | | |
| 66 | K21.03015 | 389 262 0637 | (387 262 0837) | 2 | 3./4.VİTES FRENLEME (Mo) | SYNCHRONIZING CONE / Mo | | | ♦ |
| | | | (389 262 1037) | | | | | | |
| 66 | K21.03401 | 945 260 0450 | | 2 | 3./4.VİTES FRENLEME (C) | SYNCHRONIZING CONE / C | | | ♦ |
| 67 | K21.03044 | 387 262 1093 | (387 262 0693) | 2 | FRENLEME TELİ | SPRING | | | ♦ |
| | | | (960 262 1393) | | | | | | |

NOTES :
Parts encoded alphabetic and numaric are used together.

NOTLAR :
Alfabetik ve rakam ile kodlanan parçalar birlikte kullanılır.





Original parts names, oem numbers, symbols and descriptions used in this catalogue are for reference purposes only.

# GEARBOX G 100-12 / 10.0 - 0,82

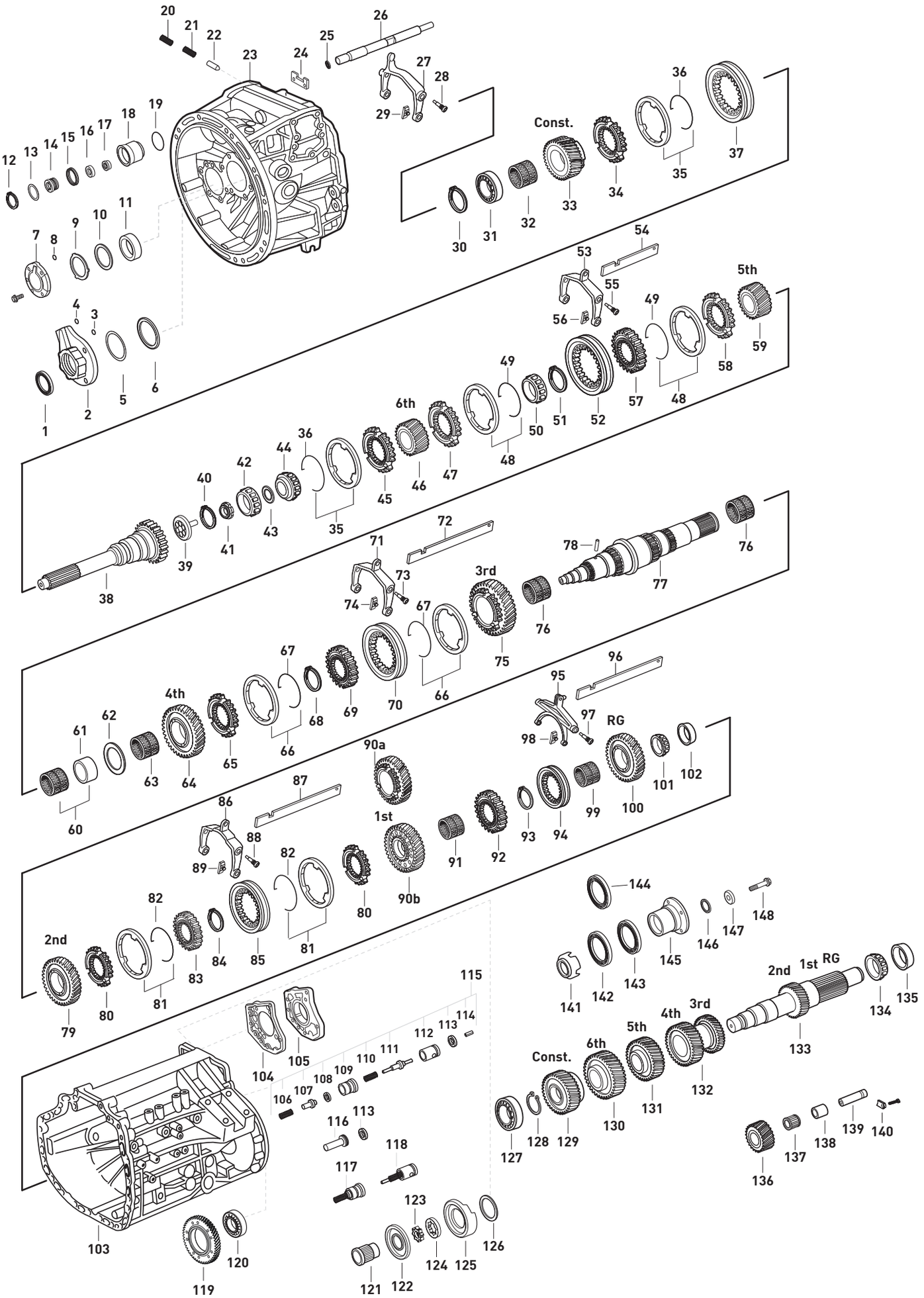




Original parts names, oem numbers, symbols and descriptions used in this catalogue are for reference purposes only.

| Fig. | Kacmaz No | Oem No | Oem Old No | Pcs. | Ürün Tanımı | Description | Sizes | Not | G100-12 |
|---|---|---|---|---|---|---|---|---|---|
| 68 | K21.06927 | 389 262 0173 | | 1 | 3./4.VİTES YILDIZ DİŞLİ SEKMANI | RETAINING RING | 2,90mm | | ♦ |
| 68 | K21.06924 | 389 262 0373 | | 1 | 3./4.VİTES YILDIZ DİŞLİ SEKMANI | RETAINING RING | 3,00mm | | ♦ |
| 68 | K21.06921 | 389 262 0573 | | 1 | 3./4.VİTES YILDIZ DİŞLİ SEKMANI | RETAINING RING | 3,10mm | | ♦ |
| 68 | K21.06919 | 389 262 1273 | | 1 | 3./4.VİTES YILDIZ DİŞLİ SEKMANI | RETAINING RING | 3,20mm | | ♦ |
| 68 | K21.06917 | 389 262 1373 | | 1 | 3./4.VİTES YILDIZ DİŞLİ SEKMANI | RETAINING RING | 3,25mm | | ♦ |
| 68 | K21.06916 | 389 262 1473 | | 1 | 3./4.VİTES YILDIZ DİŞLİ SEKMANI | RETAINING RING | 3,30mm | | ♦ |
| 69 | K21.03248 | 389 262 2735 | | 1 | 3./4.VİTES YILDIZ DİŞLİ 60 DİŞ | SYNCHRONIZER HUB 60 T. | | | ♦ |
| 70 | K21.03002 | 945 262 2823 | (945 262 0323) | 1 | 3./4.VİTES HALKA | ENGAGING SLEEVE | | | ♦ |
| | | | (945 262 0623) | | | | | | |
| | | | (389 262 4123) | | | | | | |
| | | | (389 262 2723) | | | | | | |
| 71 | | 976 260 0230 | | 1 | 3./4.VİTES HİLALİ | GEAR SHIT FORK | | | ♦ |
| 72 | | 976 265 0204 | | 1 | 3./4.VİTES HİLAL ÇITASI | SHIFTING ROD | | | ♦ |
| 73 | K21.04307 | 960 265 0774 | (945 265 1274) | 2 | HİLAL CİVATASI | PIN | | | ♦ |
| | | | (945 265 2974) | | | | | | |
| | | | (945 265 2774) | | | | | | |
| 74 | K21.03431 | 960 265 0049 | (947 265 0349) | 2 | 3./4.VİTES HİLAL PABUCU | SLIDING PAD | | | ♦ |
| | | | (389 265 2749) | | | | | | |
| 75 | K21.03249 | 976 262 1113 | (976 262 1013) | 1 | 3.VİTES DİŞLİSİ 47 DİŞ | GEAR 3rd 47 T. | | | ♦ |
| | | | (976 262 0613) | | | | | | |
| | | | (976 262 0913) | | | | | | |
| | | | (976 262 0113) | | | | | | |
| | | | (389 262 2713) | | | | | | |
| 76 | K21.03845 | 008 981 8610 | (007 981 5510) | 2 | 2./3.VİTES MASURA BİLYA | NEEDLE CAGE | 92X100X49,5mm | | ♦ |
| | | | (019 981 3410) | | | | | | |
| | | | (018 981 7910) | | | | | | |
| 77 | K21.03040 | 976 262 2105 | (976 262 2005) | 1 | KAMALI MİL | MAIN SHAFT | | (A) | ♦ |
| 77 | | 976 262 1505 | | 1 | KAMALI MİL | MAIN SHAFT | | (B) | ♦ |
| 77 | | 976 262 1305 | (976 262 1105) | 1 | KAMALI MİL | MAIN SHAFT | | (B) | ♦ |
| 78 | | 001481 013007 | | 1 | KAMALI MİL YAĞLAMA PİMİ | PIN | | | ♦ |
| 79 | K21.03254 | 976 262 1612 | (389 262 2712) | 1 | 2.VİTES DİŞLİSİ 45 DİŞ | GEAR 2nd 45 T. | | | ♦ |
| | | | (976 262 1312) | | | | | | |
| | | | (976 262 0612) | | | | | | |
| | | | (976 262 1212) | | | | | | |
| | | | (976 262 0312) | | | | | | |
| | | | (389 262 3112) | | | | | | |
| | | | (976 262 1412) | | | | | | |
| | | | (976 262 1512) | | | | | | |
| 80 | K21.03025 | 945 262 0434 | (389 262 0034) | 2 | 1./2.VİTES SENKROMENÇ | ENGAGING RING | | | ♦ |
| 81 | K21.03016 | 389 262 0737 | (387 262 0937) | 2 | 1./2.VİTES FRENLEME (Mo) | SYNCHRINIZING CONE / Mo | | | ♦ |
| | | | (389 262 1137) | | | | | | |
| 81 | K21.06041 | 945 260 0650 | | 2 | 1./2.VİTES FRENLEME (C) | SYNCHRINIZING CONE / C | | | ♦ |
| 82 | K21.03055 | 387 262 0893 | (387 262 0793) | 2 | FRENLEME TELİ | SPRING | | | ♦ |
| 83 | K21.03256 | 389 262 1135 | | 1 | 1./2.VİTES YILDIZ DİŞLİ 66 DİŞ | SYNCHRONIZER HUB 66 T. | | | ♦ |
| 84 | K21.06928 | 387 262 4173 | | 1 | 1./2.VİTES YILDIZ DİŞLİ SEKMANI | RETAINING RING | 2,90mm | | ♦ |
| 84 | K21.06906 | 387 262 4373 | | 1 | 1./2.VİTES YILDIZ DİŞLİ SEKMANI | RETAINING RING | 3,00mm | | ♦ |
| 84 | K21.06922 | 387 262 4573 | | 1 | 1./2.VİTES YILDIZ DİŞLİ SEKMANI | RETAINING RING | 3,10mm | | ♦ |
| 84 | K21.06918 | 387 262 9773 | | 1 | 1./2.VİTES YILDIZ DİŞLİ SEKMANI | RETAINING RING | 3,20mm | | ♦ |
| 85 | K21.03009 | 945 262 2723 | (945 262 0423) | 1 | 1./2.VİTES HALKA | ENGAGING SLEEVE | | | ♦ |
| | | | (389 262 2623) | | | | | | |
| 86 | | 976 260 0830 | | 1 | 1./2.VİTES HİLALİ | SHIFTING FORK | | | ♦ |
| 87 | | 976 265 0304 | | 1 | 1./2.VİTES HİLAL ÇITASI | SHIFTING ROD | | | ♦ |
| 88 | K21.04307 | 960 265 0774 | (945 265 1274) | 2 | HİLAL CİVATASI | PIN | | | ♦ |

NOTES :
Parts encoded alphabetic and numaric are used together.

NOTLAR :
Alfabetik ve rakam ile kodlanan parçalar birlikte kullanılır.





Original parts names, oem numbers, symbols and descriptions used in this catalogue are for reference purposes only.

# GEARBOX G 100-12 / 10.0 - 0,82

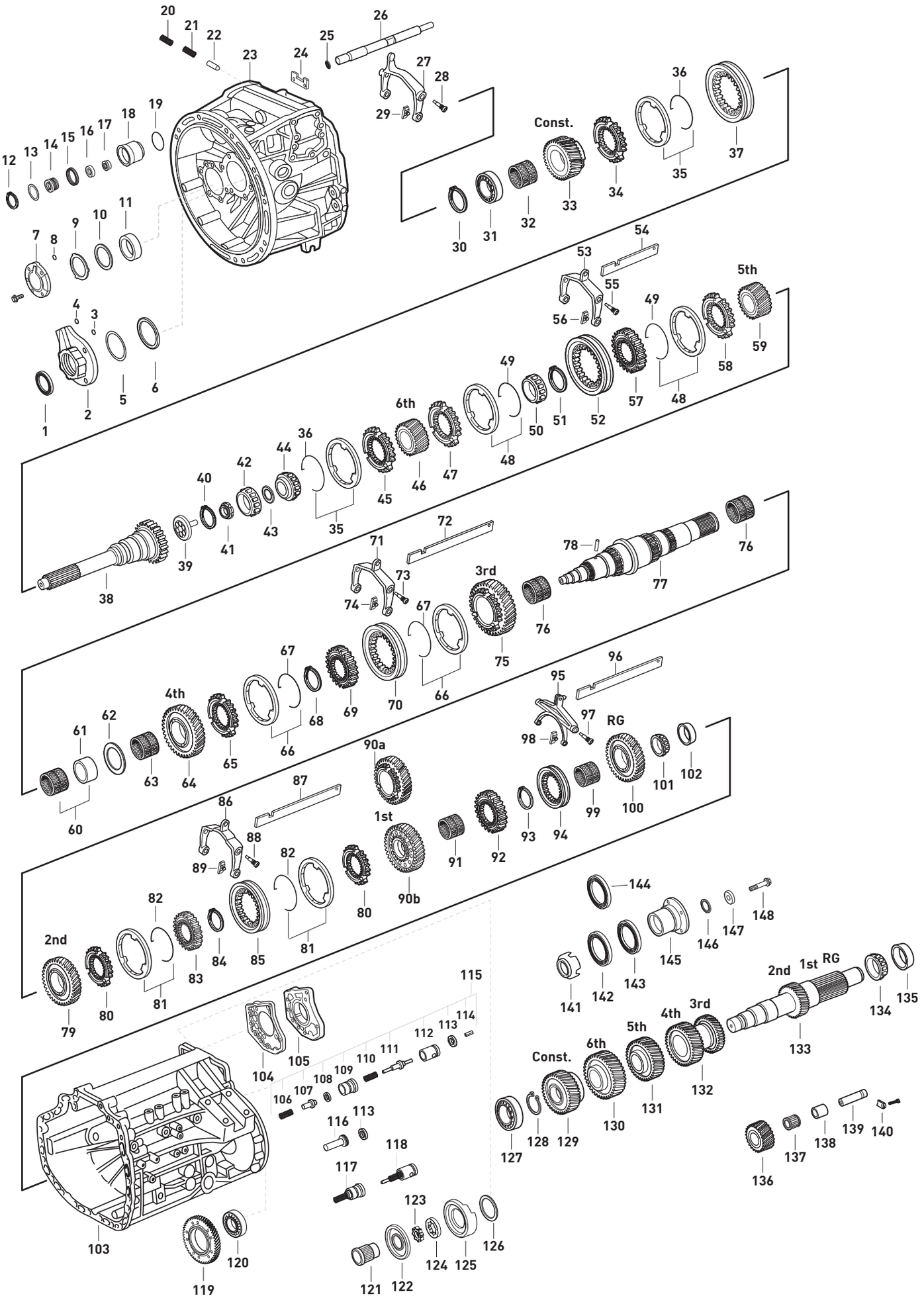




Original parts names, oem numbers, symbols and descriptions used in this catalogue are for reference purposes only.

| Fig. | Kacmaz No | Oem No | Oem Old No | Pcs. | Ürün Tanımı | Description | Sizes | Not | G100-12 |
|---|---|---|---|---|---|---|---|---|---|
| 89 | K21.03431 | 960 265 0049 | (947 265 0349) | 2 | 1./2.VİTES HİLAL PABUCU | SLIDING PAD | | | ♦ |
| | | | (389 265 2749) | | | | | | |
| 90a | | 976 262 1211 | (976 262 0511) | 1 | 1.VİTES DİŞLİSİ 50 DİŞ | GEAR 1st 50 T | | | ♦ |
| | | | (976 262 1311) | | | | | | |
| | | | (976 262 0211) | | | | | | |
| 90b | | 976 262 0011 | | 1 | 1.VİTES DİŞLİSİ 50 DİŞ | GEAR 1st 50 T | | | ♦ |
| 91 | K21.03805 | 010 981 4810 | (010 981 2610) | 1 | 1.VİTES MASURA BİLYA | NEEDLE BEARING | 85X93X40mm | | ♦ |
| | | | (013 981 2710) | | | | | | |
| | | | (017 981 8010) | | | | | | |
| | | | (019 981 1410) | | | | | | |
| | | | (019 981 1510) | | | | | | |
| | | | (019 981 3510) | | | | | | |
| 92 | K21.03260 | 976 262 0335 | | 1 | GERİ VİTES YILDIZ DİŞLİ 37 DİŞ | SYNCHRONIZER HUB 37 T. | | | ♦ |
| 93 | | 387 262 6173 | | 1 | GERİ VİTES YILDIZ DİŞLİ SEKMANI | RETAINING RING | 2,40mm | | ♦ |
| 93 | | 387 262 6373 | | 1 | GERİ VİTES YILDIZ DİŞLİ SEKMANI | RETAINING RING | 2,50mm | | ♦ |
| 93 | | 387 262 6573 | | 1 | GERİ VİTES YILDIZ DİŞLİ SEKMANI | RETAINING RING | 2,60mm | | ♦ |
| 93 | | 976 262 2473 | | 1 | GERİ VİTES YILDIZ DİŞLİ SEKMANI | RETAINING RING | 2,70mm | | ♦ |
| 94 | K21.03060 | 389 262 1723 | (389 262 0023) | 1 | GERİ VİTES HALKASI | ENGAGING SLEEVE | | | ♦ |
| 95 | | 976 260 0030 | (976 260 1030) | 1 | GERİ VİTES HİLALİ | SHIFTING FORK | | | ♦ |
| | | | (976 260 1230) | | | | | | |
| 96 | | 976 265 0404 | | 1 | GERİ VİTES HİLAL ÇITASI | SHIFTING ROD | | | ♦ |
| 97 | K21.04307 | 960 265 0774 | (945 265 1274) | 2 | HİLAL CİVATASI | PIN | | | ♦ |
| | | | (945 265 2974) | | | | | | |
| | | | (945 265 2774) | | | | | | |
| 98 | K21.03410 | 947 265 0249 | (945 265 0149) | 2 | GERİ VİTES HİLAL PABUCU | SLIDING PAD | | | ♦ |
| 99 | K21.03839 | 945 981 0010 | (018 981 8110) | 1 | GERİ VİTES MASURA BİLYA | NEEDLE BEARING | 75X83X48mm | | ♦ |
| | | | (018 981 7610) | | | | | | |
| 100 | | 976 262 1333 | (976 262 0233) | 1 | GERİ VİTES DİŞLİSİ 47 DİŞ | REVERSE GEAR 47 T | | | ♦ |
| 101 | K21.03605 | 002 981 4581 | | 1 | KAMALI MİL ARKA BİLYA | ROLLER BEARING | 65X31mm | | ♦ |
| 102 | K21.03654 | 001 981 9680 | | 1 | KAMALI MİL ARKA BİLYA ÇANAĞI | BEARING RACE | 135mm | | ♦ |
| 103 | | 976 261 3703 | | 1 | ŞANZIMAN ORTA GÖVDE | HOUSING | | | ♦ |
| 104 | K21.03667 | 945 261 0680 | (945 261 0580) | 1 | PTO KAPAK CONTASI | GASKET | | | ♦ |
| | | | (945 261 0080) | | | | | | |
| 105 | K21.06143 | 656 261 0133 | (389 261 1233) | 1 | PTO KAPAĞI | COVER | | | ♦ |
| | | | (389 261 1333) | | | | | | |
| | | | (389 261 2533) | | | | | | |
| 106 | | 389 993 5301 | | 1 | YAĞ BASINÇ YAYI | SPRING | | | ♦ |
| 107 | | 389 269 1026 | (389 269 0926) | 1 | YAĞ BASINÇ VALFİ | SELECTOR VALVE | | | ♦ |
| 108 | K21.04210 | 013 997 0148 | (020 997 8348) | 1 | YAĞ BASINÇ ORİNGİ | O-RING | 13,3X2,4mm | | ♦ |
| 109 | | 389 269 1444 | (389 269 0744) | 1 | YAĞ BASINÇ VALF GÖVDESİ | VALVE INSERT | | | ♦ |
| 110 | | 389 993 4401 | | 1 | YAĞ BASINÇ VALF MİL YAYI | SPRING | 11,5X41,9X1mm | | ♦ |
| 111 | | 389 269 0826 | | 1 | YAĞ BASINÇ VALF MİLİ | SELECTOR VALVE | | | ♦ |
| 112 | | 389 269 0844 | | 1 | YAĞ BASINÇ VALF TOPU | BALL | | | ♦ |
| 113 | K21.04212 | 013 997 0048 | (020 997 8248) | 1 | YAĞ BASINÇ VALF ORİNGİ | O-RING | 19,2X3mm | | ♦ |
| 114 | | 001481 004049 | (001481 004001) | 1 | EMNİYET PİMİ | CLAMPING SLEEVE | | | ♦ |
| 115 | K21.06962 | 655 260 0157 | | Kit | YAĞ BASINÇ VALFİ KOMPLE | VALVE KIT | | | ♦ |
| 116 | K21.06979 | 389 265 0176 | (389 265 0076) | 1 | YAĞ BASINÇ VALFİ ALIN FİBERİ | WASHER | | | ♦ |
| 117 | K21.06953 | 960 260 1057 | | Kit | YAĞ BASINÇ VALFİ KOMPLE | VALVE KIT | | | ♦ |
| 118 | K21.06973 | 960 260 1257 | | Kit | YAĞ BASINÇ VALFİ KOMPLE | VALVE KIT | | | ♦ |
| 119 | | 976 264 0030 | | 1 | RETARDER DİŞLİSİ | RETARDER GEAR | | | ♦ |
| 120 | K21.03625 | 008 981 3025 | (008 981 5225) | 1 | ŞANZIMAN ARKA BİLYA | ROLLER BEARING | 80x150x28mm | | ♦ |
| | | | (007 981 3325) | | | | | | |
| 121 | | 976 269 0010 | (976 269 0110) | 1 | YAĞ POMPA MİLİ | OIL PUMP SHAFT | | | ♦ |

NOTES :
Parts encoded alphabetic and numaric are used together.

NOTLAR :
Alfabetik ve rakam ile kodlanan parçalar birlikte kullanılır.





Original parts names, oem numbers, symbols and descriptions used in this catalogue are for reference purposes only.

# GEARBOX G 100-12 / 10.0 - 0,82

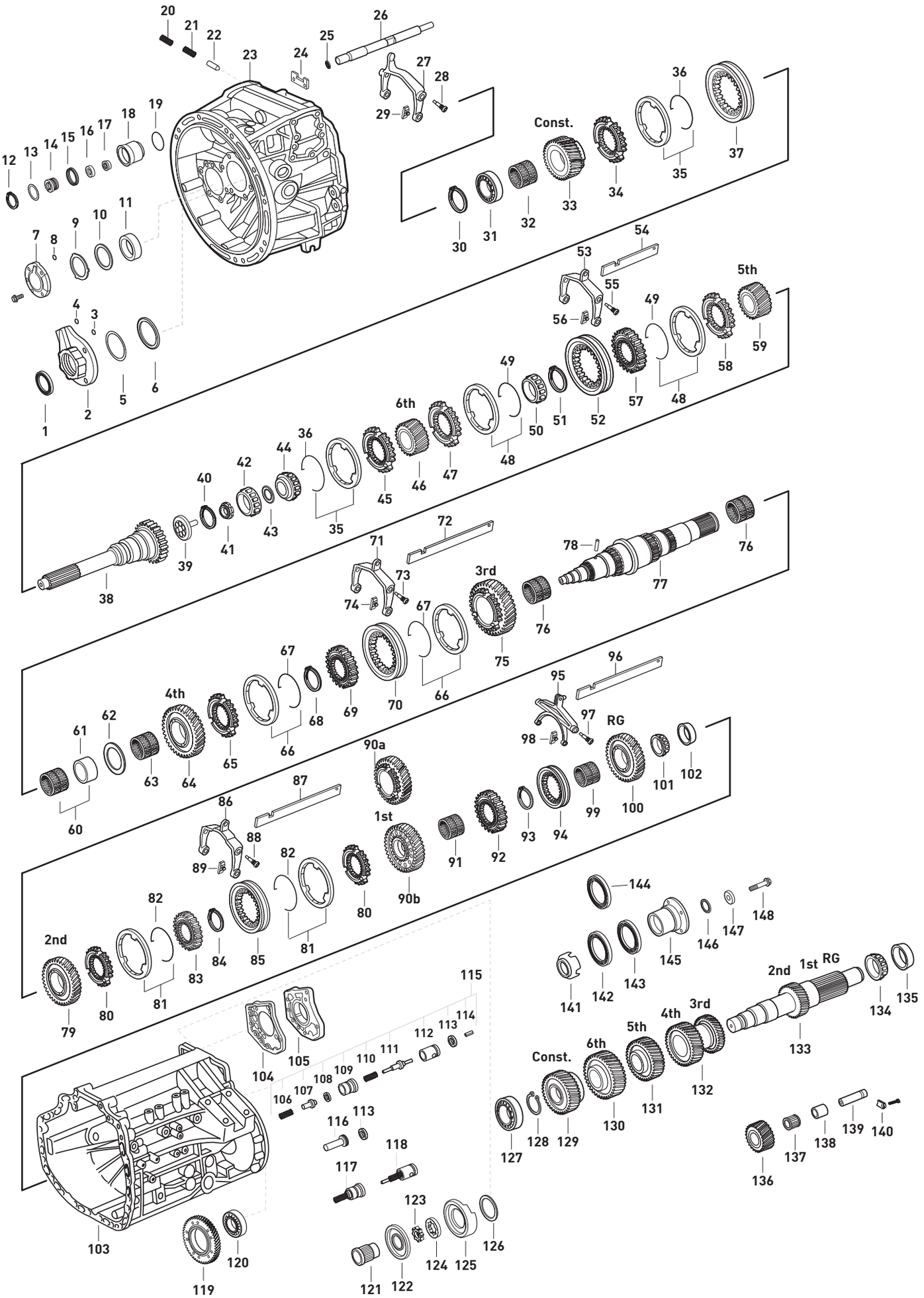




Original parts names, oem numbers, symbols and descriptions used in this catalogue are for reference purposes only.

| Fig. | Kacmaz No | Oem No | Oem Old No | Pcs. | Ürün Tanımı | Description | Sizes | Not | G100-12 |
|---|---|---|---|---|---|---|---|---|---|
| 122 | K21.03458 | 389 269 2001 | (389 269 1901) | 1 | YAĞ POMPA KAPAĞI | OIL PUMP COVER | | | ♦ |
| 123 | K21.03459 | 389 269 1606 | (389 269 1706) | 1 | YAĞ POMPA İÇ ROTOR | OIL PUMP GEAR | | | ♦ |
| 124 | K21.03414 | 389 269 0706 | (389 269 1206) | 1 | YAĞ POMPA DIŞ ROTOR | ROTOR | | | ♦ |
| 125 | K21.03460 | 389 269 2201 | (389 269 2101) | 1 | YAĞ POMPA GÖVDESİ | OIL PUMP HOUSING | | | ♦ |
| 126 | K21.04289 | 389 263 1352 | | 1 | YAĞ POMPA AYAR RAYNELİ | THRUST WASHER | 0,10mm | | ♦ |
| 126 | K21.04290 | 389 263 1452 | | 1 | YAĞ POMPA AYAR RAYNELİ | THRUST WASHER | 0,15mm | | ♦ |
| 126 | K21.04291 | 389 263 1552 | | 1 | YAĞ POMPA AYAR RAYNELİ | THRUST WASHER | 0,25mm | | ♦ |
| 126 | K21.04292 | 389 263 1652 | | 1 | YAĞ POMPA AYAR RAYNELİ | THRUST WASHER | 0,30mm | | ♦ |
| 126 | K21.04293 | 389 263 1752 | | 1 | YAĞ POMPA AYAR RAYNELİ | THRUST WASHER | 0,50mm | | ♦ |
| 127 | K21.03606 | 015 981 9005 | (014 981 1405) | 1 | GRUP MİLİ ÖN BİLYA | ROLLER BEARING | 50,8X100X35mm | | ♦ |
| | | | (012 981 7405) | | | | | | |
| | | | (012 981 5105) | | | | | | |
| 128 | K21.06426 | 900055 060300 | (000 264 5351) | 1 | GRUP MİLİ ÖN BİLYA SEKMANI | RETAINING RING | 3,00mm | | ♦ |
| 129 | K21.03039 | 976 263 0810 | (976 263 1510) | 1 | TAKVİYE DİŞLİ KARŞILIĞI 51 DİŞ | CONSTANT GEAR 51 T. | | | ♦ |
| 130 | K21.03262 | 976 263 0710 | (976 263 1710) | 1 | 6.VİTES DİŞLİ KARŞILIĞI 55 DİŞ | GEAR 6th 55 T. | | | ♦ |
| 131 | K21.03041 | 976 263 0215 | (976 263 0615) | 1 | 5.VİTES DİŞLİ KARŞILIĞI 45 DİŞ | GEAR 5th 45 T. | | | ♦ |
| 132 | K21.03265 | 389 263 2113 | (389 263 1613) | 1 | MAKARA DİŞLİ 33/38 DİŞ | DOUBLE GEAR 33/38 T. | | | ♦ |
| | | | (389 263 2513) | | | | | | |
| | | | (976 263 0213) | | | | | | |
| 133 | K21.03267 | 976 263 0402 | | 1 | GRUP MİLİ 12/19 DİŞ | COUNTER SHAFT 12/19 T. | | | ♦ |
| 134 | K21.03607 | 002 981 4681 | | 1 | GRUP MİLİ ARKA BİLYA | ROLLER BEARING | 45X30mm | | ♦ |
| 135 | K21.03655 | 001 981 9780 | | 1 | GRUP MİLİ ARKA BİLYA ÇANAĞI | BEARING RACE | 108mm | | ♦ |
| 136 | K21.06060 | 976 263 0031 | | 1 | KÜÇÜK GERİ VİTES DİŞLİSİ 21 DİŞ | REVERSE IDLER GEAR 21 T. | | | ♦ |
| 137 | | 017 981 7510 | (019 981 4610) | 1 | KÜÇÜK GERİ VİT.MASURA BİLYA | NEEDLE CAGE | | | ♦ |
| 138 | | 976 263 0050 | | 1 | KÜÇÜK GERİ VİTES BİLYA ÇANAĞI | BUSHING | | | ♦ |
| 139 | K21.06037 | 976 263 1230 | (976 263 0030) | 1 | KÜÇÜK GERİ VİTES PİMİ | PIN | | | ♦ |
| 140 | | 976 263 0041 | | 1 | K.GERİ VİTES PİM KİLİTLEMESİ | PIN | | | ♦ |
| 141 | K21.04144 | 387 262 0928 | | 1 | ŞANZIMAN KM DEVİR SACI | PULSE STAR | | | ♦ |
| 142 | K21.03537 | 017 997 2547 | (007 997 3847) | 1 | ŞANZIMAN ARKA KEÇE | OIL SEAL | 80X100X10mm | | ♦ |
| | | | (007 997 9847) | | | | | | |
| | | | (008 997 0347) | | | | | | |
| 143 | K26.00104 | 017 997 7947 | (007 997 8446) | 1 | ŞANZIMAN ARKA KEÇE | OIL SEAL | 80X100X10mm | | ♦ |
| | | | (008 997 0047) | | | | | | |
| | | | (009 997 0746) | | | | | | |
| | | | (012 997 2347) | | | | | | |
| | | | (012 997 4447) | | | | | | |
| 144 | K21.03519 | 023 997 8847 | (023 997 8547) | 1 | ŞANZIMAN ARKA KEÇE | OIL SEAL | 80X100X15,5mm | | ♦ |
| | | | (020 997 6447) | | | | | | |
| 145 | | 976 262 0345 | (947 262 0345) | 1 | ŞANZIMAN FLANŞI | COMPANION FLANGE | Ø150mm | | ♦ |
| 145 | K21.06063 | 976 262 0145 | (976 262 0045) | 1 | ŞANZIMAN FLANŞI | COMPANION FLANGE | 4-H, Ø150mm | | ♦ |
| 146 | K21.06990 | 027 997 3048 | (023 997 5548) | 1 | ŞANZIMAN FLANŞ ORİNGİ | O-RING | 56,52X5,33mm | | ♦ |
| | | | (023 997 6048) | | | | | | |
| 147 | | 976 262 0362 | (976 262 0162) | 1 | ŞANZ.FLANŞI VİDA PULU | THRUST WASHER | | | ♦ |
| 148 | | 000000 000963 | | 1 | ŞANZ.FLANŞI VİDASI | SCREW | M20X1,5X80 | | ♦ |

NOTES :
Parts encoded alphabetic and numaric are used together.

NOTLAR :
Alfabetik ve rakam ile kodlanan parçalar birlikte kullanılır.





Original parts names, oem numbers, symbols and descriptions used in this catalogue are for reference purposes only.

SYNCHRONIZER KIT CONST.

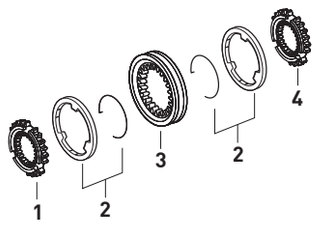


| Fig. | Kacmaz No. | Oem No | Oem Old No | Pcs. | Ürün Tanımı | Description |
|---|---|---|---|---|---|---|
| | K21.06186 | | | Kit | TAK.SENKROMENÇ KİT | SYNCHRONIZER KIT Const |
| 1 | K21.03003 | 389 262 1134 | | 1 | TAKVİYE SENKROMENÇ | ENGAGING RING |
| 2 | K21.03015 | 389 262 0637 | (387 262 0837) | 2 | TAKVİYE FRENLEME (Mo) | SYNCHRONIZING CONE / Mo |
| 3 | K21.03002 | 945 262 2823 | (945 262 0323) | 1 | TAKVİYE HALKA | ENGAGING SLEEVE |
| 4 | K21.03005 | 976 262 2834 | (976 262 0534) | 1 | TAKVİYE SENKROMENÇ | ENGAGING RING |

SYNCHRONIZER KIT 5th/6th

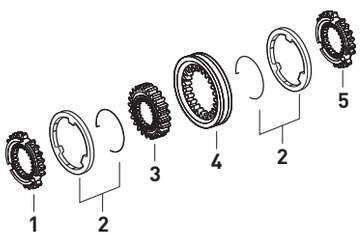


| Fig. | Kacmaz No. | Oem No | Oem Old No | Pcs. | Ürün Tanımı | Description |
|---|---|---|---|---|---|---|
| | K21.06187 | | | Kit | 5./6.VİTES SENK.KİT | SYNCH.KIT 5th/6th |
| 1 | K21.03005 | 976 262 2834 | (976 262 0534) | 1 | 6.VİTES SENKROMENÇ | ENGAGING RING |
| 2 | K21.03015 | 389 262 0637 | (387 262 0837) | 2 | 5./6.VİT.FRENLEME (Mo) | SYNCHRONIZING CONE / Mo |
| 3 | K21.03243 | 389 262 1935 | | 1 | 5./6.VİT.YILDIZ DİŞLİ 60 DİŞ | SYNCHRONIZER HUB 60 T. |
| 4 | K21.03002 | 945 262 2823 | (945 262 0323) | 1 | 5./6.VİTES HALKA | ENGAGING SLEEVE |
| 5 | K21.03007 | 945 262 4034 | (389 262 5334) | 1 | 5.VİTES SENKROMENÇ | ENGAGING RING |

SYNCHRONIZER KIT 3rd/4th

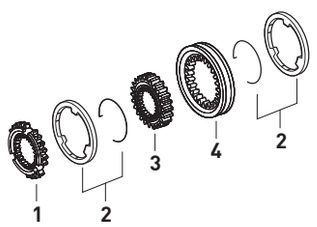


| Fig. | Kacmaz No. | Oem No | Oem Old No | Pcs. | Ürün Tanımı | Description |
|---|---|---|---|---|---|---|
| | K21.06188 | | | Kit | 3./4.VİTES SENK.KİT | SYNCH.KIT 3rd/4th |
| 1 | K21.03024 | 389 262 5434 | (945 262 0334) | 1 | 4.VİTES SENKROMENÇ | ENGAGING RING |
| | | | (945 262 0134) | | | |
| 2 | K21.03015 | 389 262 0637 | (387 262 0837) | 2 | 3./4.VİT.FRENLEME (Mo) | SYNCHRONIZING CONE / Mo |
| 3 | K21.03248 | 389 262 2735 | | 1 | 3./4.VİTES YILDIZ DİŞLİ | SYNCHRONIZER HUB |
| 4 | K21.03002 | 945 262 2823 | (945 262 0323) | 1 | 3./4.VİTES HALKA | ENGAGING SLEEVE |

SYNCHRONIZER KIT 3rd/4th
OLD MODEL

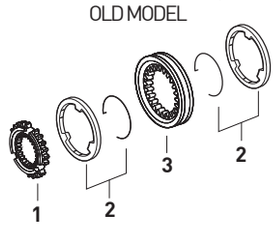


| Fig. | Kacmaz No. | Oem No | Oem Old No | Pcs. | Ürün Tanımı | Description |
|---|---|---|---|---|---|---|
| | K21.06209 | | | Kit | 3./4.VİTES SENK.KİT | SYNCH.KIT 3rd/4th |
| 1 | K21.03024 | 389 262 5434 | (945 262 0334) | 1 | 3./4.VİTES SENKROMENÇ | ENGAGING RING |
| 2 | K21.03015 | 389 262 0637 | (387 262 0837) | 2 | 3./4.VİT.FRENLEME (Mo) | SYNCHRONIZING CONE / Mo |
| 3 | K21.03002 | 945 262 2823 | (945 262 0323) | 1 | 3./4.VİTES HALKA | ENGAGING SLEEVE |

SYNCHRONIZER KIT 1st/2nd

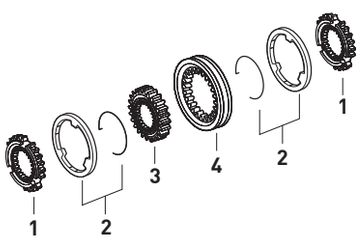


| Fig. | Kacmaz No. | Oem No | Oem Old No | Pcs. | Ürün Tanımı | Description |
|---|---|---|---|---|---|---|
| | K21.06189 | | | Kit | 1./2.VİTES SENK.KİT | SYNCH.KIT 1st/2nd |
| 1 | K21.03025 | 945 262 0434 | (389 262 0034) | 2 | 1./2.VİTES SENKROMENÇ | ENGAGING RING |
| 2 | K21.03016 | 389 262 0737 | (387 262 0937) | 2 | 1./2.VİT.FRENLEME (Mo) | SYNCHRONIZING CONE / Mo |
| 3 | K21.03256 | 389 262 1135 | | 1 | 1./2.VİT.YILDIZ DİŞLİ 66 DİŞ | SYNCHRONIZER HUB 66 T. |
| 4 | K21.03009 | 945 262 2723 | (945 262 0423) | 1 | 1./2.VİTES HALKA | ENGAGING SLEEVE |
| | | | (389 262 2623) | | | |

SYNCHRONIZER KIT 1st/2nd
OLD MODEL

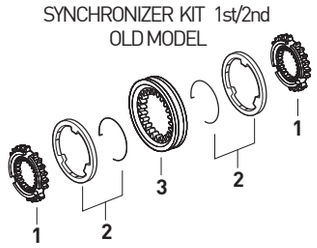


| Fig. | Kacmaz No. | Oem No | Oem Old No | Pcs. | Ürün Tanımı | Description |
|---|---|---|---|---|---|---|
| | K21.06517 | | | Kit | 1./2.VİTES SENK.KİT | SYNCH.KIT 1st/2nd |
| 1 | K21.03025 | 945 262 0434 | (389 262 0034) | 2 | 1./2.VİTES SENKROMENÇ | ENGAGING RING |
| 2 | K21.03016 | 389 262 0737 | (387 262 0937) | 2 | 1./2.VİT.FRENLEME (Mo) | SYNCHRONIZING CONE / Mo |
| 3 | K21.03009 | 945 262 2723 | (945 262 0423) | 1 | 1./2.VİTES HALKA | ENGAGING SLEEVE |
| | | | (389 262 2623) | | | |



**Original parts names, oem numbers, symbols and descriptions used in this catalogue are for reference purposes only.**

# NOTES / NOTLAR



Original parts names, oem numbers, symbols and descriptions used in this catalogue are for reference purposes only.

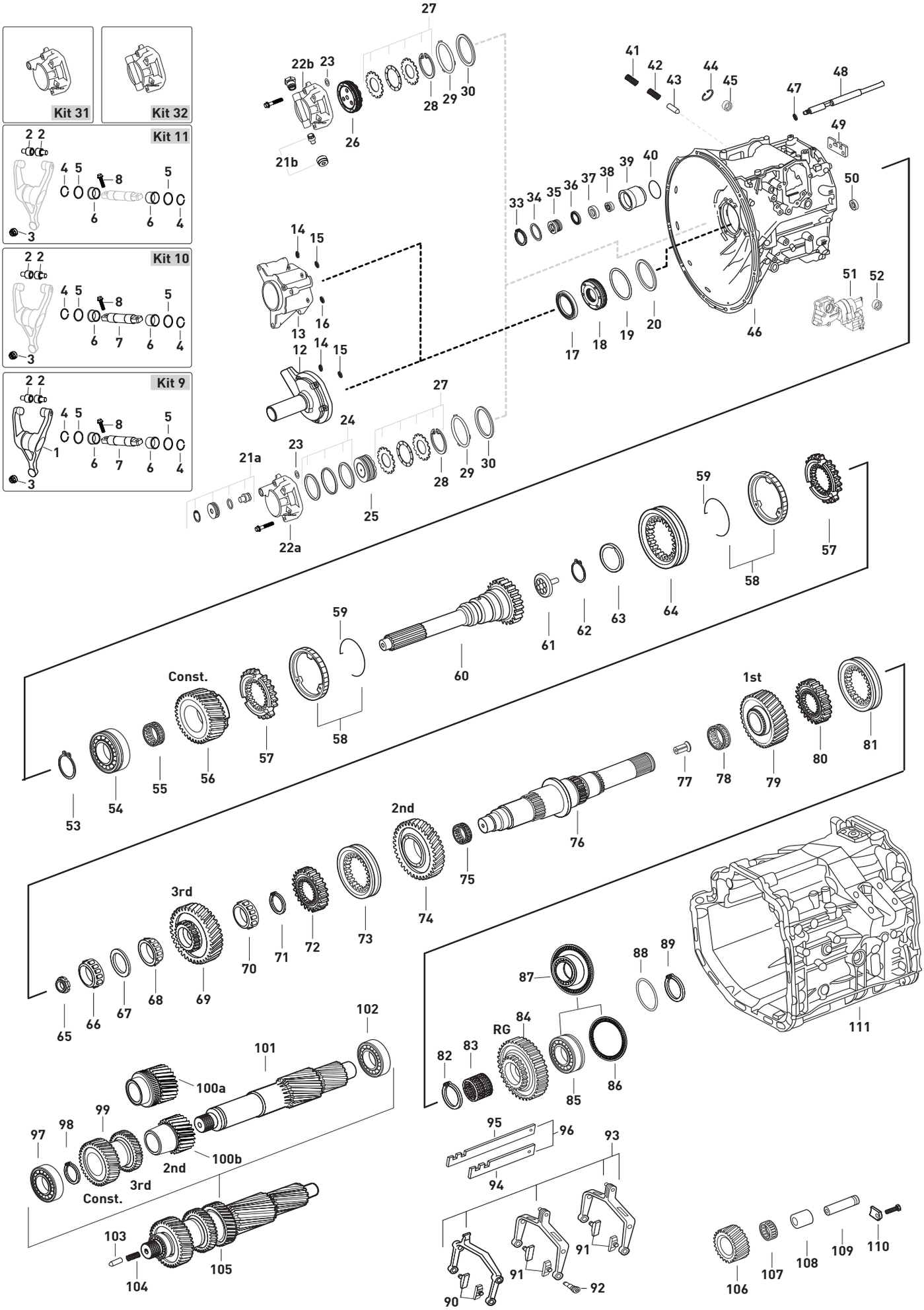






Original parts names, oem numbers, symbols and descriptions used in this catalogue are for reference purposes only.

| Fig. | Kacmaz No | Oem No | Oem Old No | Pcs. | Ürün Tanımı | Description | Sizes | Not | 715350 | 715351 | 715352 | 715354 | 715356 | 715358 | 715359 |
|---|---|---|---|---|---|---|---|---|---|---|---|---|---|---|---|
| 1 | | 655 250 1513 | | 1 | DEBRİYAJ ÇATALI | RELEASE FORK | | | ♦ | ♦ | | | | ♦ | |
| 2 | K21.07038 | 000 254 0017 | | 2 | DEBRİYAJ ÇATAL BURÇ VE PİMİ | CAM ROLLER | | | ♦ | ♦ | | | | ♦ | |
| 3 | K21.07040 | 000 254 0335 | | 1 | DEBRİYAJ ÇATAL PLASTİK BURCU | PLASTIC BUSHING | | | ♦ | ♦ | | | | ♦ | |
| 4 | | 912009 035100 | | 2 | DEBRİYAJ ÇATAL MİL SEKMANI | RETAINING RING | | | ♦ | ♦ | | | | ♦ | |
| 5 | | 000988 036100 | | 2 | DEBRİYAJ ÇATAL MİL AYAR PULU | WASHER | | | ♦ | ♦ | | | | ♦ | |
| 6 | | 002 992 1501 | | 2 | DEBRİYAJ ÇATAL MİL BURCU | BUSHING | 36,5X43X16mm | | ♦ | ♦ | | | | ♦ | |
| 7 | | 655 254 0206 | | 1 | DEBRİYAJ ÇATAL MİLİ | SHAFT | | | ♦ | ♦ | | | | ♦ | |
| 8 | | 910105 012026 | | 2 | DEBRİYAJ ÇATAL MİL VİDASI | SCREW | M12X40mm | | ♦ | ♦ | | | | ♦ | |
| 9 | K21.07036 | 655 250 1813 | | Kit | DEBRİYAJ ÇATALI KOMPLE | RELEASE FORK COMPLETE | | | ♦ | ♦ | | | | ♦ | |
| 9 | K21.97036 | 655 250 1813-S | | Kit | DEB.ÇATALI KOMPLE (BİLYALI TİP) | RELEASE FORK COMPLETE | | WITH BEARING | ♦ | ♦ | | | | ♦ | |
| 10 | K21.07037 | | | Kit | DEBRİYAJ ÇATALI TAMİR TAKIMI | RELEASE FORK REPAIR KIT | | | ♦ | ♦ | | | | ♦ | |
| 11 | K21.07039 | | | Kit | DEBRİYAJ ÇATALI TAMİR TK.MİLSİZ | RELEASE FORK REPAIR KIT | | W/OUT SHAFT | ♦ | ♦ | | | | ♦ | |
| 12 | K21.03462 | 947 261 0818 | (947 261 0618) | 1 | PRİZDİREK KEÇE KAPAĞI | COVER | | | ♦ | | | | | ♦ | |
| 12 | | 947 261 2218 | | 1 | PRİZDİREK KEÇE KAPAĞI | COVER | | | | ♦ | | | | | |
| 13 | | 960 261 0018 | | 1 | PRİZDİREK KEÇE KAPAĞI | COVER | | | | | ♦ | ♦ | ♦ | | |
| 13 | | 960 261 6018 | | 1 | PRİZDİREK KEÇE KAPAĞI | COVER | | | | | | | | | ♦ |
| 14 | K21.06637 | 019 997 8348 | (020 997 7948) | 1 | PRİZDİREK KEÇE KAPAK ORİNGİ | O-RING | 14X4mm | | ♦ | ♦ | ♦ | ♦ | ♦ | ♦ | ♦ |
| 15 | K21.06636 | 015 997 4048 | (020 997 8748) | 1 | PRİZDİREK KEÇE KAPAK ORİNGİ | O-RING | 5X3mm | | ♦ | ♦ | ♦ | ♦ | ♦ | ♦ | ♦ |
| 16 | | 023 997 7748 | | 1 | PRİZDİREK KEÇE KAPAK ORİNGİ | O-RING | 13,1X2mm | | | | ♦ | ♦ | ♦ | | ♦ |
| 17 | K21.03509 | 019 997 0547 | (023 997 7847) | 1 | PRİZDİREK KEÇESİ | OIL SEAL | 56X72X8mm | | ♦ | ♦ | ♦ | ♦ | ♦ | ♦ | ♦ |
| | | | (019 997 0647) | | | | | | | | | | | | |
| | | | (022 997 8547) | | | | | | | | | | | | |
| 18 | K21.06038 | 389 261 0665 | (389 261 0765) | 1 | YAĞ TUTUCU DİSK | OIL BAFFLE | 75X16mm | | ♦ | ♦ | ♦ | ♦ | ♦ | ♦ | ♦ |
| | | | (389 261 0865) | | | | | | | | | | | | |
| 19 | K21.06635 | 020 997 7848 | | 1 | PRİZDİREK KEÇE KAPAK ORİNGİ | O-RING | 138X3mm | | ♦ | ♦ | ♦ | ♦ | ♦ | ♦ | ♦ |
| 19 | K21.06712 | 028 997 2248 | (019 997 7248) | 1 | PRİZDİREK KEÇE KAPAK ORİNGİ | O-RING | 140X3mm | | ♦ | ♦ | | | | | |
| 20 | K21.04162 | 389 262 4152 | (389 262 0955) | 1 | PRİZDİREK AYAR RAYNELİ | THRUST WASHER | 0,10mm | | ♦ | ♦ | ♦ | ♦ | ♦ | ♦ | ♦ |
| 20 | K21.04243 | 389 262 0855 | | 1 | PRİZDİREK AYAR RAYNELİ | THRUST WASHER | 0,15mm | | ♦ | ♦ | ♦ | ♦ | ♦ | ♦ | ♦ |
| 20 | K21.04151 | 389 262 0755 | | 1 | PRİZDİREK AYAR RAYNELİ | THRUST WASHER | 0,20mm | | ♦ | ♦ | ♦ | ♦ | ♦ | ♦ | ♦ |
| 20 | K21.06715 | 389 262 3055 | | 1 | PRİZDİREK AYAR RAYNELİ | THRUST WASHER | 0,25mm | | ♦ | ♦ | ♦ | ♦ | ♦ | ♦ | ♦ |
| 20 | K21.04221 | 389 262 3255 | | 1 | PRİZDİREK AYAR RAYNELİ | THRUST WASHER | 0,31mm | | ♦ | ♦ | ♦ | ♦ | ♦ | ♦ | ♦ |
| 20 | K21.04163 | 389 262 3555 | (389 262 0655) | 1 | PRİZDİREK AYAR RAYNELİ | THRUST WASHER | 0,40mm | | ♦ | ♦ | ♦ | ♦ | ♦ | ♦ | ♦ |
| | | | (389 262 4452) | | | | | | | | | | | | |
| 20 | K21.04164 | 389 262 3755 | (389 262 1954) | 1 | PRİZDİREK AYAR RAYNELİ | THRUST WASHER | 0,46mm | | ♦ | ♦ | ♦ | ♦ | ♦ | ♦ | ♦ |
| 20 | K21.04246 | 389 262 3855 | | 1 | PRİZDİREK AYAR RAYNELİ | THRUST WASHER | 0,49mm | | ♦ | ♦ | ♦ | ♦ | ♦ | ♦ | ♦ |
| 20 | K21.04250 | 389 262 4055 | (389 262 0155) | 1 | PRİZDİREK AYAR RAYNELİ | THRUST WASHER | 0,55mm | | ♦ | ♦ | ♦ | ♦ | ♦ | ♦ | ♦ |
| | | | (389 262 2154) | | | | | | | | | | | | |
| 20 | K21.04167 | 389 262 4255 | (389 262 2254) | 1 | PRİZDİREK AYAR RAYNELİ | THRUST WASHER | 0,61mm | | ♦ | ♦ | ♦ | ♦ | ♦ | ♦ | ♦ |
| 20 | K21.04168 | 389 262 4355 | (389 262 2354) | 1 | PRİZDİREK AYAR RAYNELİ | THRUST WASHER | 0,64mm | | ♦ | ♦ | ♦ | ♦ | ♦ | ♦ | ♦ |
| 20 | K21.04169 | 389 262 4555 | (389 262 2454) | 1 | PRİZDİREK AYAR RAYNELİ | THRUST WASHER | 0,70mm | | ♦ | ♦ | ♦ | ♦ | ♦ | ♦ | ♦ |
| 20 | K21.04170 | 389 262 4755 | (389 262 2554) | 1 | PRİZDİREK AYAR RAYNELİ | THRUST WASHER | 0,76mm | | ♦ | ♦ | ♦ | ♦ | ♦ | ♦ | ♦ |
| 20 | K21.04281 | 389 262 4855 | (389 262 0555) | 1 | PRİZDİREK AYAR RAYNELİ | THRUST WASHER | 0,79mm | | ♦ | ♦ | ♦ | ♦ | ♦ | ♦ | ♦ |
| 20 | K21.04282 | 389 262 5555 | | 1 | PRİZDİREK AYAR RAYNELİ | THRUST WASHER | 1,00mm | | ♦ | ♦ | ♦ | ♦ | ♦ | ♦ | ♦ |
| 20 | K21.04171 | 389 262 9654 | (389 262 2654) | 1 | PRİZDİREK AYAR RAYNELİ | THRUST WASHER | 2,00mm | | ♦ | ♦ | ♦ | ♦ | ♦ | ♦ | ♦ |
| 21a | K21.06498 | 930 260 0058 | | 1 | HAVALANDIRMA TAMİR TAKIMI | REPAIR KIT | | (K) | ♦ | ♦ | ♦ | ♦ | ♦ | ♦ | ♦ |
| 21b | K21.07027 | 960 260 0058 | | 1 | HAVALANDIRMA TAMİR TAKIMI | REPAIR KIT | | (L) | | | ♦ | ♦ | | | ♦ |
| 22a | K21.06301 | 960 261 1933 | | 1 | GRUP DURDURUCU KAPAĞI | COVER | | (K) | ♦ | ♦ | | | ♦ | ♦ | |
| 22b | K21.06949 | 960 261 4133 | | 1 | GRUP DURDURUCU KAPAĞI | COVER | | (L) | | | ♦ | ♦ | | | ♦ |
| 23 | K21.06636 | 015 997 4048 | (020 997 8748) | 1 | GRUP DURDURUCU PİSTON ORİNGİ | O-RING | 5X3mm | | ♦ | ♦ | ♦ | ♦ | ♦ | ♦ | ♦ |
| 24 | K21.06396 | 947 260 0718 | (960 260 3318) | 1 | GRUP DURD.PİSTON TAMİR TAKIMI | REPAIR KIT | | | ♦ | ♦ | | | | | |
| 25 | K21.06302 | 960 260 1718 | | 1 | GRUP DURDURUCU KAPAK PİSTONU | PISTON | | (K) | ♦ | ♦ | | | ♦ | ♦ | |
| 26 | K21.06967 | 960 260 3418 | | 1 | GRUP DURDURUCU KAPAK PİSTONU | PISTON | | (L) | | | ♦ | ♦ | | | ♦ |
| 27 | K21.06431 | 960 262 0291 | (960 262 0191) | 1 | KAVRAMA HALKA SETİ | PARTS KIT | | | ♦ | ♦ | ♦ | ♦ | ♦ | ♦ | ♦ |

NOTES :
Parts encoded alphabetic and numaric are used together.

GEARBOX TYPE:
715350 - 715351 - 715358 - G211-12 KL /14,93 - 1,00
715352 - 715354 -715356 - 715359 - G211-12 KL /14,93 - 1,00

NOTLAR :
Alfabetik ve rakam ile kodlanan parçalar birlikte kullanılır.

ŞANZIMAN TİPLERİ:
715350 - 715351 - 715358 - G211-12 KL /14,93 - 1,00
715352 - 715354 -715356 - 715359 - G211-12 KL /14,93 - 1,00





Original parts names, oem numbers, symbols and descriptions used in this catalogue are for reference purposes only.

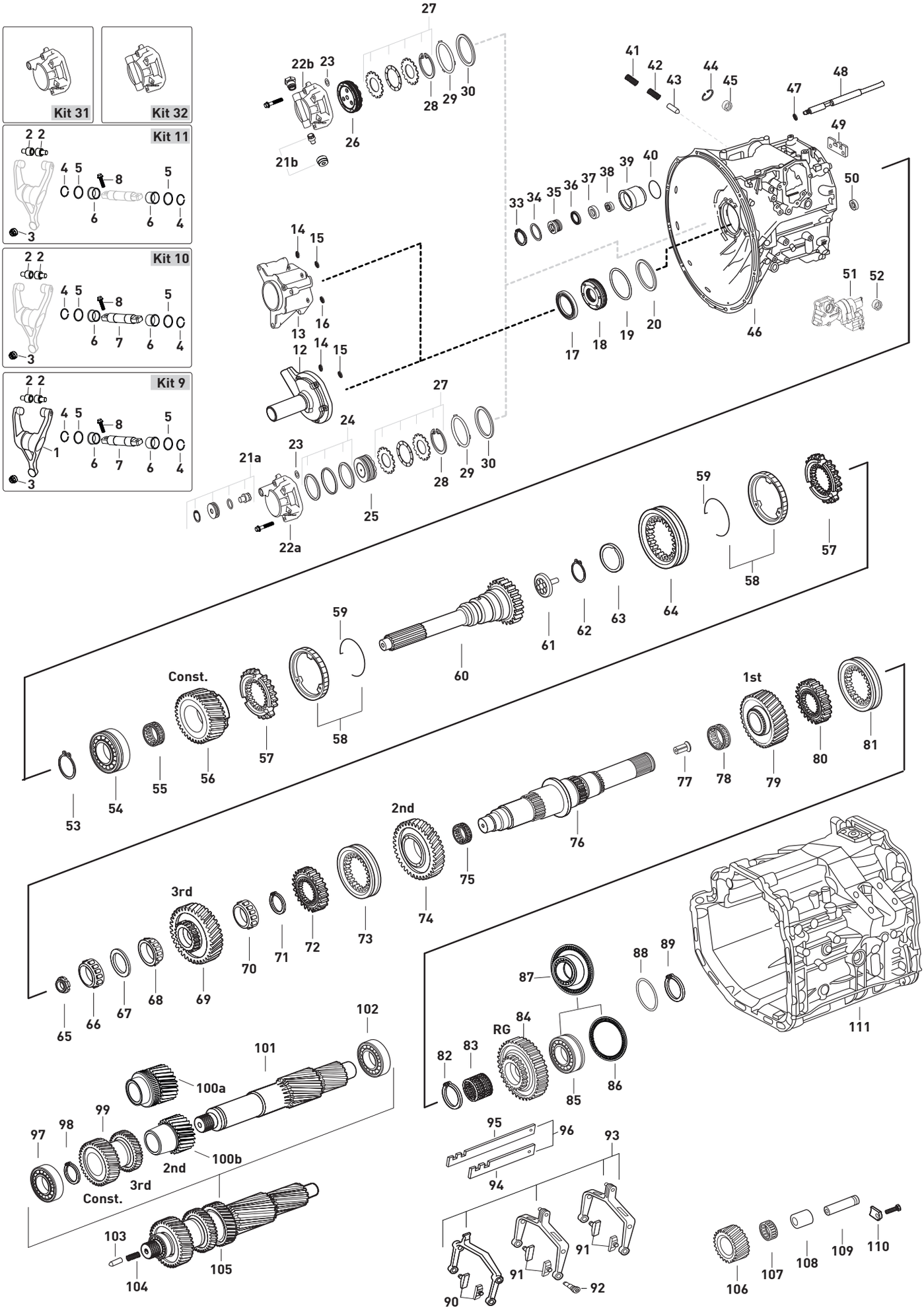






Original parts names, oem numbers, symbols and descriptions used in this catalogue are for reference purposes only.

| Fig. | Kacmaz No | Oem No | Oem Old No | Pcs. | Ürün Tanımı | Description | Sizes | Not | 715350 | 715351 | 715352 | 715354 | 715356 | 715358 | 715359 |
|---|---|---|---|---|---|---|---|---|---|---|---|---|---|---|---|
| 28 | K21.06730 | 970 994 3541 | (000472 100000) | 1 | GRUP DURDURUCU KİLİT SEKMANI | RETAINING RING | 3,00mm | | ♦ | ♦ | ♦ | ♦ | ♦ | ♦ | ♦ |
| 29 | K21.06533 | 028 997 2348 | (004 997 2248) | 1 | GRUP DURDURUCU KAPAK ORİNGİ | O-RING | 100X3mm | | ♦ | ♦ | ♦ | ♦ | ♦ | ♦ | ♦ |
| 30 | K21.04192 | 406 337 0252 | | 1 | GRUP MİLİ ÖN BİLYA RAYNELİ | THRUST WASHER | 0,10mm | | ♦ | ♦ | ♦ | ♦ | ♦ | ♦ | ♦ |
| 30 | K21.04150 | 406 337 0352 | | 1 | GRUP MİLİ ÖN BİLYA RAYNELİ | THRUST WASHER | 0,20mm | | ♦ | ♦ | ♦ | ♦ | ♦ | ♦ | ♦ |
| 30 | K21.94150 | | | 1 | GRUP MİLİ ÖN BİLYA RAYNELİ | THRUST WASHER | 0,25mm | | ♦ | ♦ | ♦ | ♦ | ♦ | ♦ | ♦ |
| 30 | K21.04338 | 406 337 0452 | | 1 | GRUP MİLİ ÖN BİLYA RAYNELİ | THRUST WASHER | 0,30mm | | ♦ | ♦ | ♦ | ♦ | ♦ | ♦ | ♦ |
| 30 | K21.04196 | 389 263 5352 | (389 263 3252) | 1 | GRUP MİLİ ÖN BİLYA RAYNELİ | THRUST WASHER | 0,40mm | | ♦ | ♦ | ♦ | ♦ | ♦ | ♦ | ♦ |
| 30 | K21.04194 | 389 263 3352 | | 1 | GRUP MİLİ ÖN BİLYA RAYNELİ | THRUST WASHER | 0,45mm | | ♦ | ♦ | ♦ | ♦ | ♦ | ♦ | ♦ |
| 30 | K21.06719 | 389 263 5652 | | 1 | GRUP MİLİ ÖN BİLYA RAYNELİ | THRUST WASHER | 0,49mm | | ♦ | ♦ | ♦ | ♦ | ♦ | ♦ | ♦ |
| 30 | K21.04197 | 389 263 5852 | (389 263 3552) | 1 | GRUP MİLİ ÖN BİLYA RAYNELİ | THRUST WASHER | 0,55mm | | ♦ | ♦ | ♦ | ♦ | ♦ | ♦ | ♦ |
| 30 | K21.04340 | 389 263 6052 | | 1 | GRUP MİLİ ÖN BİLYA RAYNELİ | THRUST WASHER | 0,61mm | | ♦ | ♦ | ♦ | ♦ | ♦ | ♦ | ♦ |
| 30 | K21.04198 | 389 263 6352 | (389 263 3852) | 1 | GRUP MİLİ ÖN BİLYA RAYNELİ | THRUST WASHER | 0,70mm | | ♦ | ♦ | ♦ | ♦ | ♦ | ♦ | ♦ |
| 30 | K21.04154 | 389 263 3952 | | 1 | GRUP MİLİ ÖN BİLYA RAYNELİ | THRUST WASHER | 0,75mm | | ♦ | ♦ | ♦ | ♦ | ♦ | ♦ | ♦ |
| 30 | K21.04199 | 389 263 6852 | | 1 | GRUP MİLİ ÖN BİLYA RAYNELİ | THRUST WASHER | 0,85mm | | ♦ | ♦ | ♦ | ♦ | ♦ | ♦ | ♦ |
| 30 | K21.04200 | 389 263 7352 | | 1 | GRUP MİLİ ÖN BİLYA RAYNELİ | THRUST WASHER | 1,00mm | | ♦ | ♦ | ♦ | ♦ | ♦ | ♦ | ♦ |
| 30 | K21.04201 | 389 263 7852 | | 1 | GRUP MİLİ ÖN BİLYA RAYNELİ | THRUST WASHER | 1,15mm | | ♦ | ♦ | ♦ | ♦ | ♦ | ♦ | ♦ |
| 30 | K21.04202 | 389 263 8352 | | 1 | GRUP MİLİ ÖN BİLYA RAYNELİ | THRUST WASHER | 1,30mm | | ♦ | ♦ | ♦ | ♦ | ♦ | ♦ | ♦ |
| 31 | K21.06487 | | | 1 | GRUP DURDURUCU KAPAĞI KOMPLE | REPAIR KIT | | (K) | ♦ | ♦ | | | ♦ | ♦ | |
| 32 | K21.06948 | 960 260 5965 | (960 260 4865) | 1 | GRUP DURDURUCU KAPAĞI KOMPLE | REPAIR KIT | | (L) | | | ♦ | ♦ | | | ♦ |
| 33 | | 006 994 4241 | (000472 065001) | 1 | TAKVİYE PİSTON SEKMANI | RETAINING RING | 65X2,5mm | | ♦ | ♦ | ♦ | ♦ | ♦ | ♦ | ♦ |
| 34 | K21.04233 | 389 262 2555 | | 1 | TAKVİYE SİLİNDİR PULU | SPACER WASHER | 0,70mm | | ♦ | ♦ | ♦ | ♦ | ♦ | ♦ | ♦ |
| 34 | K21.04234 | 389 262 2655 | | 1 | TAKVİYE SİLİNDİR PULU | SPACER WASHER | 0,90mm | | ♦ | ♦ | ♦ | ♦ | ♦ | ♦ | ♦ |
| 34 | K21.04112 | 389 262 3254 | | 1 | TAKVİYE SİLİNDİR PULU | SPACER WASHER | 1,05mm | | ♦ | ♦ | ♦ | ♦ | ♦ | ♦ | ♦ |
| 34 | K21.04111 | 389 262 3354 | | 1 | TAKVİYE SİLİNDİR PULU | SPACER WASHER | 1,10mm | | ♦ | ♦ | ♦ | ♦ | ♦ | ♦ | ♦ |
| 34 | K21.04109 | 389 262 3554 | | 1 | TAKVİYE SİLİNDİR PULU | SPACER WASHER | 1,20mm | | ♦ | ♦ | ♦ | ♦ | ♦ | ♦ | ♦ |
| 34 | K21.04105 | 389 262 2052 | | 1 | TAKVİYE SİLİNDİR PULU | SPACER WASHER | 1,40mm | | ♦ | ♦ | ♦ | ♦ | ♦ | ♦ | ♦ |
| 34 | K21.04093 | 389 262 2355 | | 1 | TAKVİYE SİLİNDİR PULU | SPACER WASHER | 1,79mm | | ♦ | ♦ | ♦ | ♦ | ♦ | ♦ | ♦ |
| 34 | K21.04025 | 389 262 3252 | | 1 | TAKVİYE SİLİNDİR PULU | SPACER WASHER | 2,00mm | | ♦ | ♦ | ♦ | ♦ | ♦ | ♦ | ♦ |
| 34 | K21.04024 | 389 262 3352 | | 1 | TAKVİYE SİLİNDİR PULU | SPACER WASHER | 2,50mm | | ♦ | ♦ | ♦ | ♦ | ♦ | ♦ | ♦ |
| 35 | K21.06994 | 945 267 0218 | (387 267 0918) | 1 | TAKVİYE MİL PİSTONU | PISTON | | | ♦ | ♦ | ♦ | ♦ | ♦ | ♦ | ♦ |
| | | | (387 267 0618) | | | | | | | | | | | | |
| 36 | K21.03524 | 006 997 6447 | (020 997 6647) | 1 | TAKVİYE HAVA KEÇESİ | OIL SEAL | 41X48X11,5mm | | ♦ | ♦ | ♦ | ♦ | ♦ | ♦ | ♦ |
| | | | (012 997 3347) | | | | | | | | | | | | |
| 37 | K21.04178 | 387 267 0650 | (387 267 0250) | 1 | TAKVİYE SİLİNDİR BURCU | BUSHING | 34X22X8mm | | ♦ | ♦ | ♦ | ♦ | ♦ | ♦ | ♦ |
| 38 | K21.03523 | 000 267 0197 | (000 267 0397) | 1 | TAKVİYE HİLAL MİL KEÇESİ | OIL SEAL | 22X32X8mm | | ♦ | ♦ | ♦ | ♦ | ♦ | ♦ | ♦ |
| 39 | K21.06036 | 945 267 0819 | (945 267 0119) | 1 | TAKVİYE SİLİNDİR GÖVDESİ | CYLINDER | | | ♦ | ♦ | ♦ | ♦ | ♦ | ♦ | ♦ |
| | | | (945 267 0719) | | | | | | | | | | | | |
| | | | (945 267 0019) | | | | | | | | | | | | |
| 40 | K21.06534 | 022 997 4248 | | 1 | TAKVİYE SİLİNDİR ORİNGİ | O-RING | 55,6X3mm | | ♦ | ♦ | ♦ | ♦ | ♦ | ♦ | ♦ |
| 41 | K21.06015 | 387 993 4501 | | 1 | ŞANZ.TAKVİYE KİLİT FİŞEK YAYI | SPRING | 6,2X63mm | | ♦ | ♦ | ♦ | ♦ | ♦ | ♦ | ♦ |
| 42 | K21.03500 | 387 993 4401 | (387 993 2501) | 1 | KİLİT YAYI | SPRING | 9,8X63,3mm | | ♦ | ♦ | ♦ | ♦ | ♦ | ♦ | ♦ |
| 43 | K21.03492 | 389 267 1174 | (387 267 0074) | 1 | KİLİT FİŞEĞİ | PIN | | | ♦ | ♦ | ♦ | ♦ | ♦ | ♦ | ♦ |
| 44 | K21.06579 | 945 267 0073 | | 1 | ÖN GÖVDE MASURA BİLYA SEKMANI | SEEGER RING | | | ♦ | ♦ | | | | ♦ | |
| 45 | K21.06580 | 002 981 5712 | (945 268 0150) | 1 | ÖN GÖVDE MASURA BİLYA | BEARING | 25X39X20mm | | ♦ | ♦ | | | | ♦ | |
| 46 | | 947 260 6211 | | 1 | ŞANZIMAN ÖN GÖVDE | HOUSING | | | ♦ | | | | | ♦ | |
| 46 | | 947 260 6011 | | 1 | ŞANZIMAN ÖN GÖVDE | HOUSING | | | ♦ | | | | | | |
| 46 | | 947 260 6111 | | 1 | ŞANZIMAN ÖN GÖVDE | HOUSING | | | | ♦ | | | | | |
| 46 | | 960 260 6723 | | 1 | ŞANZIMAN ÖN GÖVDE | HOUSING | | | | | ♦ | | ♦ | | |
| 46 | | 960 260 4012 | | 1 | ŞANZIMAN ÖN GÖVDE | HOUSING | | | | | | ♦ | | | |
| 46 | | 960 260 5923 | | 1 | ŞANZIMAN ÖN GÖVDE | HOUSING | | | | | | | | | ♦ |
| 47 | K21.04160 | 387 263 2652 | | 1 | TAKVİYE HİLAL MİL PULU | SPACER WASHER | 0,20mm | | ♦ | ♦ | ♦ | ♦ | ♦ | ♦ | ♦ |
| 47 | K21.04161 | 387 263 2752 | | 1 | TAKVİYE HİLAL MİL PULU | SPACER WASHER | 0,40mm | | ♦ | ♦ | ♦ | ♦ | ♦ | ♦ | ♦ |
| 47 | | 387 263 2852 | | 1 | TAKVİYE HİLAL MİL PULU | SPACER WASHER | 0,60mm | | ♦ | ♦ | ♦ | ♦ | ♦ | ♦ | ♦ |

NOTES :
Parts encoded alphabetic and numaric are used together.

GEARBOX TYPE:
715350 - 715351 - 715358 - G211-12 KL /14,93 - 1,00
715352 - 715354 -715356 - 715359 - G211-12 KL /14,93 - 1,00

NOTLAR :
Alfabetik ve rakam ile kodlanan parçalar birlikte kullanılır.

ŞANZIMAN TİPLERİ:
715350 - 715351 - 715358 - G211-12 KL /14,93 - 1,00
715352 - 715354 -715356 - 715359 - G211-12 KL /14,93 - 1,00





Original parts names, oem numbers, symbols and descriptions used in this catalogue are for reference purposes only.

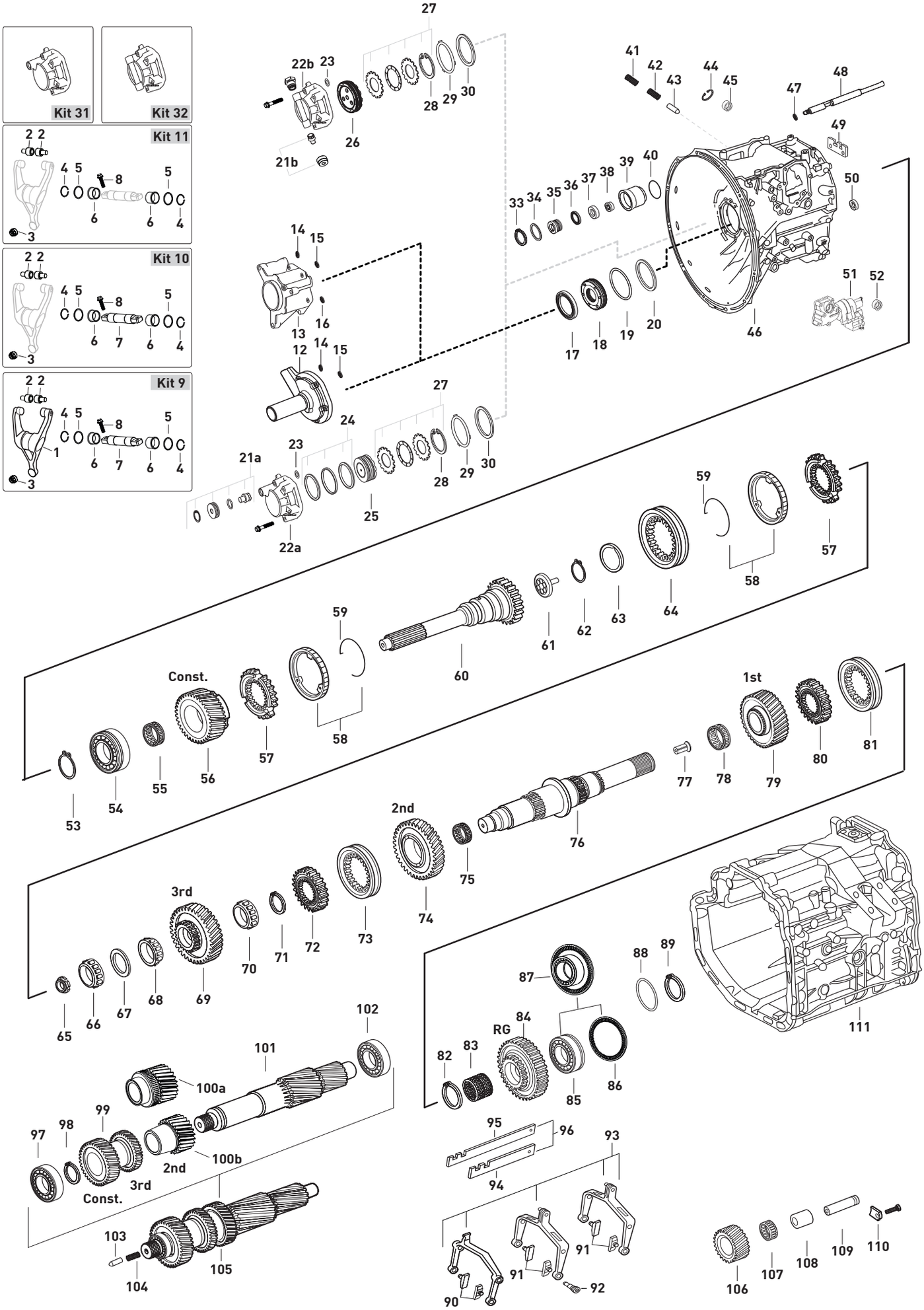






Original parts names, oem numbers, symbols and descriptions used in this catalogue are for reference purposes only.

| Fig. | Kacmaz No | Oem No | Oem Old No | Pcs. | Ürün Tanımı | Description | Sizes | Not | 715350 | 715351 | 715352 | 715354 | 715356 | 715358 | 715359 |
|---|---|---|---|---|---|---|---|---|---|---|---|---|---|---|---|
| 47 | | 387 263 3052 | | 1 | TAKVİYE HİLAL MİL PULU | SPACER WASHER | 1,00mm | | ♦ | ♦ | ♦ | ♦ | ♦ | ♦ | ♦ |
| 48 | | 947 267 0117 | | 1 | TAKVİYE HİLAL MİLİ | G SHIFT RAIL | | | ♦ | ♦ | | | | ♦ | |
| 48 | | 960 267 1917 | | 1 | TAKVİYE HİLAL MİLİ | G SHIFT RAIL | | | | | ♦ | ♦ | ♦ | | ♦ |
| 49 | K21.06847 | 960 265 0545 | | 1 | VİTES HİLAL ÇITA KİLİTLEMESİ | GUIDE | | | ♦ | ♦ | ♦ | ♦ | ♦ | ♦ | ♦ |
| 50 | K21.04252 | 000 992 7603 | (389 267 0050) | 1 | TAKVİYE HİLAL MİL BURCU | BUSHING | 21X27X16mm | | ♦ | ♦ | | | | ♦ | |
| 50 | | 004 992 6601 | | 1 | TAKVİYE HİLAL MİL BURCU | BUSHING | | | | | ♦ | ♦ | ♦ | | ♦ |
| 51 | | 930 260 0263 | (002 260 3863) | 1 | VİTES KULESİ KOMPLE | SHIFT CYLINDER | | | ♦ | | | | | ♦ | |
| | | | (930 260 0063) | | | | | | | | | | | | |
| | | | (930 260 0163) | | | | | | | | | | | | |
| 52 | | 021 981 4710 | (013 981 7110) | 1 | VİTES KULE BİLYASI | | 40X47X20 | | ♦ | | | | | ♦ | |
| | | | (018 981 1010) | | | | | | | | | | | | |
| | | | (018 981 1510) | | | | | | | | | | | | |
| 53 | K21.04347 | 387 262 8673 | | 1 | PRİZDİREK ÖN BİLYA SEKMANI | RETAINING RING | 3,15mm | | ♦ | ♦ | ♦ | ♦ | ♦ | ♦ | ♦ |
| 53 | K21.04346 | 387 262 8773 | | 1 | PRİZDİREK ÖN BİLYA SEKMANI | RETAINING RING | 3,20mm | | ♦ | ♦ | ♦ | ♦ | ♦ | ♦ | ♦ |
| 53 | K21.07015 | 387 262 8873 | | 1 | PRİZDİREK ÖN BİLYA SEKMANI | RETAINING RING | 3,25mm | | ♦ | ♦ | ♦ | ♦ | ♦ | ♦ | ♦ |
| 53 | K21.04348 | 387 262 8973 | | 1 | PRİZDİREK ÖN BİLYA SEKMANI | RETAINING RING | 3,30mm | | ♦ | ♦ | ♦ | ♦ | ♦ | ♦ | ♦ |
| 53 | K21.07016 | 387 262 9073 | | 1 | PRİZDİREK ÖN BİLYA SEKMANI | RETAINING RING | 3,35mm | | ♦ | ♦ | ♦ | ♦ | ♦ | ♦ | ♦ |
| 53 | K21.04349 | 387 262 9173 | | 1 | PRİZDİREK ÖN BİLYA SEKMANI | RETAINING RING | 3,40mm | | ♦ | ♦ | ♦ | ♦ | ♦ | ♦ | ♦ |
| 53 | K21.07017 | 387 262 9273 | | 1 | PRİZDİREK ÖN BİLYA SEKMANI | RETAINING RING | 3,45mm | | ♦ | ♦ | ♦ | ♦ | ♦ | ♦ | ♦ |
| 53 | K21.04350 | 387 262 9373 | | 1 | PRİZDİREK ÖN BİLYA SEKMANI | RETAINING RING | 3,50mm | | ♦ | ♦ | ♦ | ♦ | ♦ | ♦ | ♦ |
| 54 | K21.03618 | 011 981 1305 | (014 981 9005) | 1 | PRİZDİREK ÖN BİLYA | ROLLER BEARING | 75X140X34,25mm | | ♦ | ♦ | ♦ | ♦ | ♦ | ♦ | ♦ |
| | | | (008 981 8605) | | | | | | | | | | | | |
| | | | (008 981 2605) | | | | | | | | | | | | |
| 55 | K21.03826 | 022 981 2110 | (022 981 2010) | 1 | TAKVİYE MASURA BİLYA | NEEDLE CAGE | 84X90X48mm | | ♦ | ♦ | ♦ | ♦ | ♦ | ♦ | ♦ |
| 56 | K21.03269 | 947 262 1117 | (947 262 5210) | 1 | TAKVİYE DİŞLİSİ 29 DİŞ | CONSTANT GEAR 29 T. | | | ♦ | ♦ | ♦ | ♦ | ♦ | ♦ | ♦ |
| | | | (948 262 1810) | | | | | | | | | | | | |
| | | | (948 262 3210) | | | | | | | | | | | | |
| | | | (947 262 2310) | | | | | | | | | | | | |
| 57 | K21.03147 | 945 262 7734 | (945 262 3634) | 2 | TAKVİYE SENKROMENÇ | ENGAGING RING | | | ♦ | ♦ | ♦ | ♦ | ♦ | ♦ | ♦ |
| 58 | K21.03136 | 945 260 2245 | (946 262 6337) | 2 | TAKVİYE FRENLEME (Mo) | SYNCHRONIZING CONE / Mo | | | ♦ | ♦ | ♦ | ♦ | ♦ | ♦ | ♦ |
| 58 | K21.06274 | 947 260 2845 | (947 260 0545) | 2 | TAKVİYE FRENLEME (C) | SYNCHRONIZING CONE / C | | | ♦ | ♦ | ♦ | ♦ | ♦ | ♦ | ♦ |
| 59 | K21.03044 | 387 262 1093 | (387 262 0693) | 2 | FRENLEME TELİ | SPRING | | | ♦ | ♦ | ♦ | ♦ | ♦ | ♦ | ♦ |
| | | | (960 262 1393) | | | | | | | | | | | | |
| 60 | K21.03275 | 947 262 5602 | (947 262 3902) | 1 | PRİZDİREK 60 DİŞ | INPUT SHAFT 60 T. | | | ♦ | | ♦ | ♦ | ♦ | ♦ | ♦ |
| | | | (947 262 5002) | | | | | | | | | | | | |
| | | | (948 262 0902) | | | | | | | | | | | | |
| | | | (948 262 0702) | | | | | | | | | | | | |
| 60 | K21.03274 | 947 262 3502 | | 1 | PRİZDİREK 60 DİŞ | INPUT SHAFT 60 T. | | | | ♦ | | | | | |
| 61 | K21.04001 | 976 269 0034 | (960 269 0434) | 1 | PRİZDİREK YAĞ PİPETİ | OIL COLLECTOR | | | ♦ | ♦ | ♦ | ♦ | ♦ | ♦ | ♦ |
| 62 | K21.04002 | 000 994 9841 | | 1 | PRİZDİREK YAĞ PİPET SEKMANI | RETAINING RING | | | ♦ | ♦ | ♦ | ♦ | ♦ | ♦ | ♦ |
| 63 | K21.03513 | 001 262 0262 | (000 262 8662) | 1 | PRİZDİREK ARKA KEÇE | OIL SEAL | 73,5X101X7mm | | ♦ | ♦ | ♦ | ♦ | ♦ | ♦ | ♦ |
| | | | (000 262 9062) | | | | | | | | | | | | |
| 64 | K21.03137 | 945 262 6823 | (945 262 6423) | 1 | TAKVİYE HALKA | ENGAGING SLEEVE | | | ♦ | ♦ | ♦ | ♦ | ♦ | ♦ | ♦ |
| 65 | K21.03432 | 945 990 0250 | (945 990 0150) | 1 | KAMALI MİL SOMUNU | NUT | M30X1,5 | | ♦ | ♦ | ♦ | ♦ | ♦ | ♦ | ♦ |
| 66 | K21.03632 | 020 981 5205 | (017 981 1305) | 1 | KAMALI MİL UÇ BİLYA | ROLLER BEARING | 39,69X40,39mm | | ♦ | ♦ | ♦ | ♦ | ♦ | ♦ | ♦ |
| | | | (015 981 8505) | | | | | | | | | | | | |
| 67 | K21.04024 | 389 262 3352 | | 1 | KAMALI MİL AYAR PULU | THRUST WASHER | 2,50mm | | ♦ | ♦ | ♦ | ♦ | ♦ | ♦ | ♦ |
| 67 | K21.04025 | 389 262 3252 | | 1 | KAMALI MİL AYAR PULU | THRUST WASHER | 2,00mm | | ♦ | ♦ | ♦ | ♦ | ♦ | ♦ | ♦ |
| 67 | K21.04026 | 389 262 3152 | | 1 | KAMALI MİL AYAR PULU | THRUST WASHER | 1,95mm | | ♦ | ♦ | ♦ | ♦ | ♦ | ♦ | ♦ |
| 67 | K21.04027 | 389 262 3052 | | 1 | KAMALI MİL AYAR PULU | THRUST WASHER | 1,90mm | | ♦ | ♦ | ♦ | ♦ | ♦ | ♦ | ♦ |
| 67 | K21.04028 | 389 262 2952 | | 1 | KAMALI MİL AYAR PULU | THRUST WASHER | 1,85mm | | ♦ | ♦ | ♦ | ♦ | ♦ | ♦ | ♦ |
| 67 | K21.04092 | 389 262 2455 | | 1 | KAMALI MİL AYAR PULU | THRUST WASHER | 1,82mm | | ♦ | ♦ | ♦ | ♦ | ♦ | ♦ | ♦ |
| 67 | K21.04093 | 389 262 2355 | | 1 | KAMALI MİL AYAR PULU | THRUST WASHER | 1,79mm | | ♦ | ♦ | ♦ | ♦ | ♦ | ♦ | ♦ |

NOTES :
Parts encoded alphabetic and numaric are used together.

GEARBOX TYPE:
715350 - 715351 - 715358 - G211-12 KL /14,93 - 1,00
715352 - 715354 -715356 - 715359 - G211-12 KL /14,93 - 1,00

NOTLAR :
Alfabetik ve rakam ile kodlanan parçalar birlikte kullanılır.

ŞANZIMAN TİPLERİ:
715350 - 715351 - 715358 - G211-12 KL /14,93 - 1,00
715352 - 715354 -715356 - 715359 - G211-12 KL /14,93 - 1,00





Original parts names, oem numbers, symbols and descriptions used in this catalogue are for reference purposes only.

# GEARBOX G 211-12 KL / 14,93 - 1,0

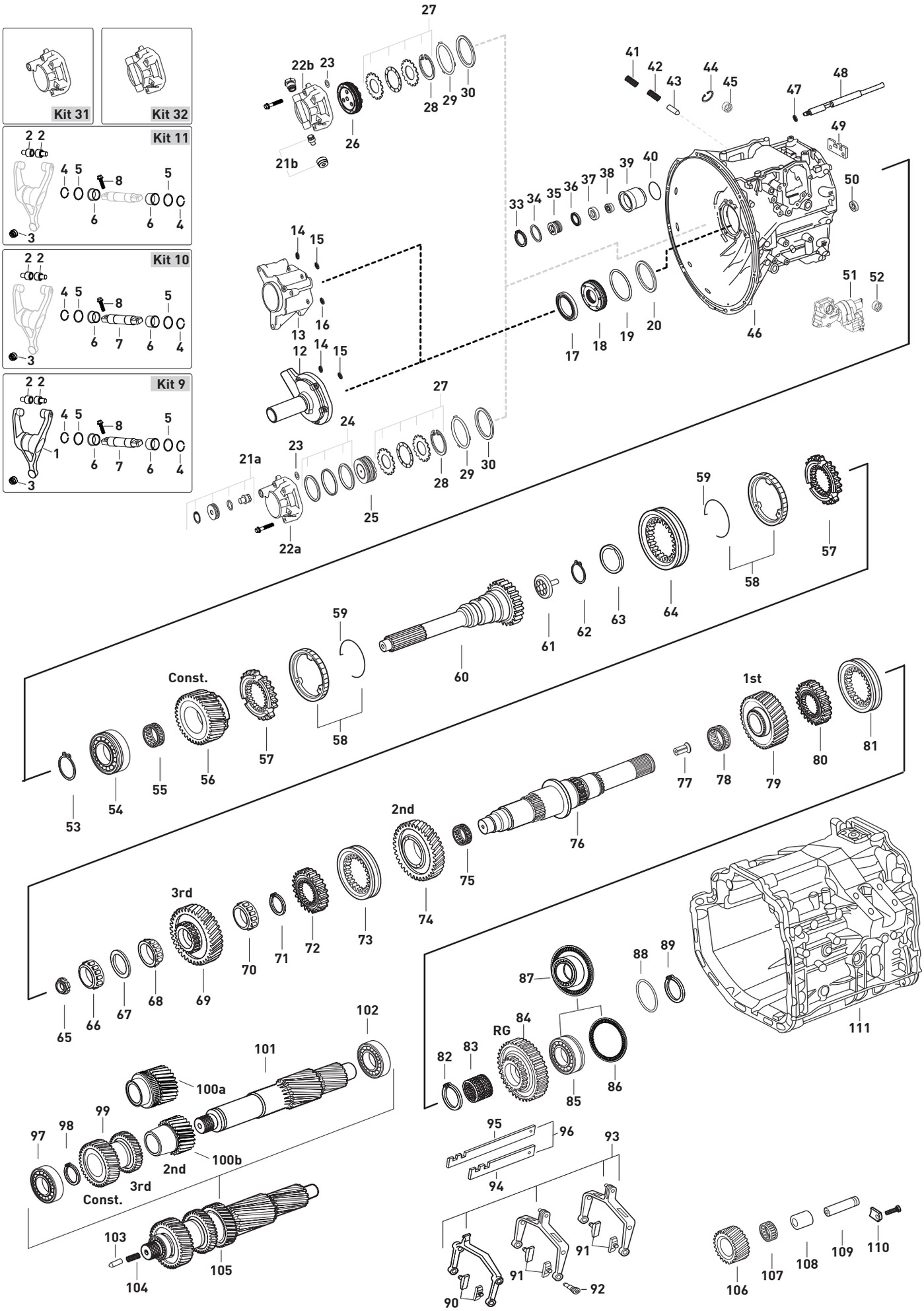




Original parts names, oem numbers, symbols and descriptions used in this catalogue are for reference purposes only.

| Fig. | Kacmaz No | Oem No | Oem Old No | Pcs. | Ürün Tanımı | Description | Sizes | Not | 715350 | 715351 | 715352 | 715354 | 715356 | 715358 | 715359 |
|---|---|---|---|---|---|---|---|---|---|---|---|---|---|---|---|
| 67 | K21.04094 | 389 262 2255 | | 1 | KAMALI MİL AYAR PULU | THRUST WASHER | 1,76mm | | ♦ | ♦ | ♦ | ♦ | ♦ | ♦ | ♦ |
| 67 | K21.04095 | 389 262 2155 | | 1 | KAMALI MİL AYAR PULU | THRUST WASHER | 1,73mm | | ♦ | ♦ | ♦ | ♦ | ♦ | ♦ | ♦ |
| 67 | K21.04096 | 389 262 2055 | | 1 | KAMALI MİL AYAR PULU | THRUST WASHER | 1,67mm | | ♦ | ♦ | ♦ | ♦ | ♦ | ♦ | ♦ |
| 67 | K21.04097 | 389 262 1955 | | 1 | KAMALI MİL AYAR PULU | THRUST WASHER | 1,64mm | | ♦ | ♦ | ♦ | ♦ | ♦ | ♦ | ♦ |
| 67 | K21.04098 | 389 262 1855 | | 1 | KAMALI MİL AYAR PULU | THRUST WASHER | 1,61mm | | ♦ | ♦ | ♦ | ♦ | ♦ | ♦ | ♦ |
| 67 | K21.04099 | 389 262 1755 | | 1 | KAMALI MİL AYAR PULU | THRUST WASHER | 1,58mm | | ♦ | ♦ | ♦ | ♦ | ♦ | ♦ | ♦ |
| 67 | K21.04100 | 389 262 2352 | | 1 | KAMALI MİL AYAR PULU | THRUST WASHER | 1,55mm | | ♦ | ♦ | ♦ | ♦ | ♦ | ♦ | ♦ |
| 67 | K21.04101 | 389 262 1655 | | 1 | KAMALI MİL AYAR PULU | THRUST WASHER | 1,52mm | | ♦ | ♦ | ♦ | ♦ | ♦ | ♦ | ♦ |
| 67 | K21.04102 | 389 262 1555 | | 1 | KAMALI MİL AYAR PULU | THRUST WASHER | 1,49mm | | ♦ | ♦ | ♦ | ♦ | ♦ | ♦ | ♦ |
| 67 | K21.04103 | 389 262 1455 | | 1 | KAMALI MİL AYAR PULU | THRUST WASHER | 1,46mm | | ♦ | ♦ | ♦ | ♦ | ♦ | ♦ | ♦ |
| 67 | K21.04104 | 389 262 1355 | | 1 | KAMALI MİL AYAR PULU | THRUST WASHER | 1,43mm | | ♦ | ♦ | ♦ | ♦ | ♦ | ♦ | ♦ |
| 67 | K21.04105 | 389 262 2052 | | 1 | KAMALI MİL AYAR PULU | THRUST WASHER | 1,40mm | | ♦ | ♦ | ♦ | ♦ | ♦ | ♦ | ♦ |
| 67 | K21.04106 | 389 262 1952 | | 1 | KAMALI MİL AYAR PULU | THRUST WASHER | 1,35mm | | ♦ | ♦ | ♦ | ♦ | ♦ | ♦ | ♦ |
| 67 | K21.04107 | 389 262 2754 | | 1 | KAMALI MİL AYAR PULU | THRUST WASHER | 1,30mm | | ♦ | ♦ | ♦ | ♦ | ♦ | ♦ | ♦ |
| 67 | K21.04108 | 389 262 3654 | | 1 | KAMALI MİL AYAR PULU | THRUST WASHER | 1,25mm | | ♦ | ♦ | ♦ | ♦ | ♦ | ♦ | ♦ |
| 67 | K21.04109 | 389 262 3554 | | 1 | KAMALI MİL AYAR PULU | THRUST WASHER | 1,20mm | | ♦ | ♦ | ♦ | ♦ | ♦ | ♦ | ♦ |
| 67 | K21.04110 | 389 262 3454 | | 1 | KAMALI MİL AYAR PULU | THRUST WASHER | 1,15mm | | ♦ | ♦ | ♦ | ♦ | ♦ | ♦ | ♦ |
| 67 | K21.04111 | 389 262 3354 | | 1 | KAMALI MİL AYAR PULU | THRUST WASHER | 1,10mm | | ♦ | ♦ | ♦ | ♦ | ♦ | ♦ | ♦ |
| 67 | K21.04112 | 389 262 3254 | | 1 | KAMALI MİL AYAR PULU | THRUST WASHER | 1,05mm | | ♦ | ♦ | ♦ | ♦ | ♦ | ♦ | ♦ |
| 67 | K21.04113 | 389 262 2854 | | 1 | KAMALI MİL AYAR PULU | THRUST WASHER | 0,50mm | | ♦ | ♦ | ♦ | ♦ | ♦ | ♦ | ♦ |
| 67 | K21.94113 | | | 1 | KAMALI MİL AYAR PULU | THRUST WASHER | 0,40mm | | ♦ | ♦ | ♦ | ♦ | ♦ | ♦ | ♦ |
| 67 | K21.84113 | | | 1 | KAMALI MİL AYAR PULU | THRUST WASHER | 0,30mm | | ♦ | ♦ | ♦ | ♦ | ♦ | ♦ | ♦ |
| 67 | K21.74113 | | | 1 | KAMALI MİL AYAR PULU | THRUST WASHER | 0,20mm | | ♦ | ♦ | ♦ | ♦ | ♦ | ♦ | ♦ |
| 67 | K21.64113 | | | 1 | KAMALI MİL AYAR PULU | THRUST WASHER | 0,10mm | | ♦ | ♦ | ♦ | ♦ | ♦ | ♦ | ♦ |
| 68 | K21.03629 | 015 981 7605 | (015 981 2005) | 1 | 3.VİTES DİŞLİ ÖN BİLYA | ROLLER BEARING | 50X41mm | | ♦ | ♦ | ♦ | ♦ | ♦ | ♦ | ♦ |
| | | | (011 981 4705) | | | | | | | | | | | | |
| | | | (011 981 5305) | | | | | | | | | | | | |
| 69 | K21.03465 | 947 262 1517 | (947 262 0117) | 1 | 3.VİTES DİŞLİSİ 34 DİŞ | GEAR 3rd 34 T. | | (A)(B) | ♦ | ♦ | ♦ | ♦ | ♦ | ♦ | ♦ |
| | | | (948 262 3410) | | | | | | | | | | | | |
| | | | (948 262 2610) | | | | | | | | | | | | |
| | | | (947 262 0617) | | | | | | | | | | | | |
| | | | (948 262 0410) | | | | | | | | | | | | |
| 69 | K21.06392 | 947 262 1510 | | 1 | 3.VİTES DİŞLİSİ 34 DİŞ | GEAR 3rd 34 T | | (C) | ♦ | ♦ | | | | | |
| 70 | K21.03636 | 017 981 8305 | | 1 | 3.VİTES DİŞLİ ARKA BİLYA | ROLLER BEARING | 52X24mm | (A)(B) | ♦ | ♦ | ♦ | ♦ | ♦ | ♦ | ♦ |
| 70 | K21.03631 | 015 981 7705 | (017 981 5705) | 1 | 3.VİTES DİŞLİ ARKA BİLYA | ROLLER BEARING | 55X23mm | (C) | ♦ | ♦ | | | | | |
| | | | (014 981 1605) | | | | | | | | | | | | |
| 71 | K21.06930 | 387 262 7873 | | 1 | 2./3.VİTES YILDIZ DİŞLİ SEKMANI | RETAINING RING | 2,80mm | | ♦ | ♦ | ♦ | ♦ | ♦ | ♦ | ♦ |
| 71 | K21.06669 | 387 262 7673 | | 1 | 2./3.VİTES YILDIZ DİŞLİ SEKMANI | RETAINING RING | 2,70mm | | ♦ | ♦ | ♦ | ♦ | ♦ | ♦ | ♦ |
| 71 | K21.06929 | 387 262 0973 | | 1 | 2./3.VİTES YILDIZ DİŞLİ SEKMANI | RETAINING RING | 2,65mm | | ♦ | ♦ | ♦ | ♦ | ♦ | ♦ | ♦ |
| 71 | K21.04337 | 387 262 0873 | | 1 | 2./3.VİTES YILDIZ DİŞLİ SEKMANI | RETAINING RING | 2,60mm | | ♦ | ♦ | ♦ | ♦ | ♦ | ♦ | ♦ |
| 71 | K21.07019 | 387 262 0773 | | 1 | 2./3.VİTES YILDIZ DİŞLİ SEKMANI | RETAINING RING | 2,55mm | | ♦ | ♦ | ♦ | ♦ | ♦ | ♦ | ♦ |
| 71 | K21.04352 | 387 262 0673 | | 1 | 2./3.VİTES YILDIZ DİŞLİ SEKMANI | RETAINING RING | 2,50mm | | ♦ | ♦ | ♦ | ♦ | ♦ | ♦ | ♦ |
| 71 | K21.07018 | 387 262 0573 | | 1 | 2./ 3.VİTES YILDIZ DİŞLİ SEKMANI | RETAINING RING | 2,45mm | | ♦ | ♦ | ♦ | ♦ | ♦ | ♦ | ♦ |
| 71 | K21.04336 | 387 262 0473 | | 1 | 2./ 3.VİTES YILDIZ DİŞLİ SEKMANI | RETAINING RING | 2,40mm | | ♦ | ♦ | ♦ | ♦ | ♦ | ♦ | ♦ |
| 72 | K21.03280 | 947 262 2635 | (947 262 1435) | 1 | 2./ 3.VİTES YILDIZ DİŞLİ | SYNCHRONIZER HUB | | | ♦ | ♦ | ♦ | ♦ | ♦ | ♦ | ♦ |
| | | | (947 262 1335) | | | | | | | | | | | | |
| | | | (947 262 1635) | | | | | | | | | | | | |
| 73 | K21.03282 | 947 262 2223 | (947 262 1423) | 1 | 2./3.VİTES HALKASI | ENGAGING SLEEVE | | | ♦ | ♦ | ♦ | ♦ | ♦ | ♦ | ♦ |
| | | | (947 262 1123) | | | | | | | | | | | | |
| | | | (947 262 0423) | | | | | | | | | | | | |
| 74 | K21.03466 | 947 262 2712 | (947 262 2412) | 1 | 2.VİTES DİŞLİSİ 38 DİŞ | GEAR 2nd 38 T. | | | ♦ | ♦ | ♦ | ♦ | ♦ | ♦ | ♦ |
| | | | (947 262 2012) | | | | | | | | | | | | |
| | | | (947 262 0812) | | | | | | | | | | | | |

NOTES :
Parts encoded alphabetic and numaric are used together.

GEARBOX TYPE:
715350 - 715351 - 715358 - G211-12 KL /14,93 - 1,00
715352 - 715354 -715356 - 715359 - G211-12 KL /14,93 - 1,00

NOTLAR :
Alfabetik ve rakam ile kodlanan parçalar birlikte kullanılır.

ŞANZIMAN TİPLERİ:
715350 - 715351 - 715358 - G211-12 KL /14,93 - 1,00
715352 - 715354 -715356 - 715359 - G211-12 KL /14,93 - 1,00





Original parts names, oem numbers, symbols and descriptions used in this catalogue are for reference purposes only.

# GEARBOX G 211-12 KL / 14,93 - 1,0

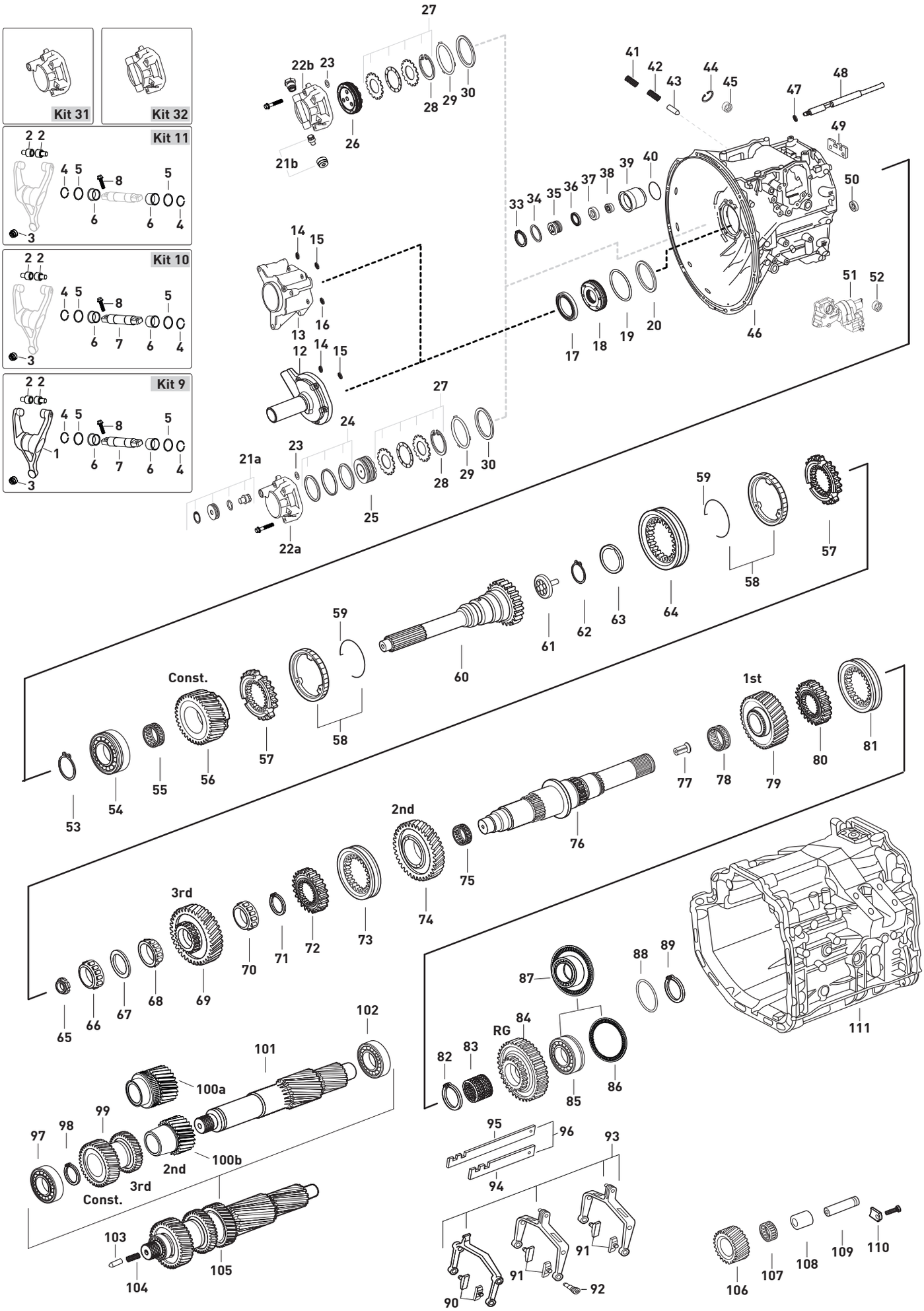




Original parts names, oem numbers, symbols and descriptions used in this catalogue are for reference purposes only.

| Fig. | Kacmaz No | Oem No | Oem Old No | Pcs. | Ürün Tanımı | Description | Sizes | Not | 715350 | 715351 | 715352 | 715354 | 715356 | 715358 | 715359 |
|---|---|---|---|---|---|---|---|---|---|---|---|---|---|---|---|
| 75 | K21.03817 | 019 981 4410 | (007 981 4210) | 1 | 2.VİTES MASURA BİLYA | NEEDLE CAGE | 75X83X55mm | | ♦ | ♦ | ♦ | ♦ | ♦ | ♦ | ♦ |
| | | | (008 981 8310) | | | | | | | | | | | | |
| | | | (009 981 0010) | | | | | | | | | | | | |
| 76 | K21.03467 | 947 262 2505 | (947 262 1705) | 1 | KAMALI MİL | MAIN SHAFT | | (A)(D) | ♦ | ♦ | ♦ | ♦ | ♦ | ♦ | ♦ |
| | | | (947 262 2305) | | | | | | | | | | | | |
| 76 | K21.03287 | 947 262 1605 | | 1 | KAMALI MİL | MAIN SHAFT | | (B) | ♦ | ♦ | | | | | |
| 76 | K21.03288 | 947 262 1505 | (947 262 0705) | 1 | KAMALI MİL | MAIN SHAFT | | (C) | ♦ | ♦ | | | | | |
| 77 | K21.04364 | 001 990 2759 | | 1 | KAMALI MİL YAĞ BORUSU | OIL PIPE | | | ♦ | ♦ | ♦ | ♦ | ♦ | ♦ | ♦ |
| 78 | K21.03827 | 013 981 1210 | (006 981 6410) | 2 | 1.VİTES MASURA BİLYA | NEEDLE CAGE | 75X83X33mm | | ♦ | ♦ | ♦ | ♦ | ♦ | ♦ | ♦ |
| | | | (015 981 0210) | | | | | | | | | | | | |
| | | | (021 981 5710) | | | | | | | | | | | | |
| 79 | K21.03468 | 947 262 5310 | (947 262 5110) | 1 | 1.VİTES DİŞLİSİ 41 DİŞ | GEAR 1st 41 T. | | | ♦ | ♦ | ♦ | ♦ | ♦ | ♦ | ♦ |
| | | | (948 262 0610) | | | | | | | | | | | | |
| 80 | K21.03280 | 947 262 2635 | (947 262 1435) | 1 | 1./ GERİ VİTES YILDIZ DİŞLİ | SYNCHRONIZER HUB | | | ♦ | ♦ | ♦ | ♦ | ♦ | ♦ | ♦ |
| | | | (947 262 1335) | | | | | | | | | | | | |
| | | | (947 262 1635) | | | | | | | | | | | | |
| 81 | K21.03282 | 947 262 2223 | (947 262 1423) | 1 | 1./GERİ VİTES HALKASI | ENGAGING SLEEVE | | | ♦ | ♦ | ♦ | ♦ | ♦ | ♦ | ♦ |
| | | | (947 262 1123) | | | | | | | | | | | | |
| | | | (947 262 0423) | | | | | | | | | | | | |
| 82 | K21.06930 | 387 262 7873 | | 1 | 1./GERİ VİTES YILDIZ DİŞLİ SEKMANI | RETAINING RING | 2,80mm | | ♦ | ♦ | ♦ | ♦ | ♦ | ♦ | ♦ |
| 82 | K21.06669 | 387 262 7673 | | 1 | 1./GERİ VİTES YILDIZ DİŞLİ SEKMANI | RETAINING RING | 2,70mm | | ♦ | ♦ | ♦ | ♦ | ♦ | ♦ | ♦ |
| 82 | K21.06929 | 387 262 0973 | | 1 | 1./GERİ VİTES YILDIZ DİŞLİ SEKMANI | RETAINING RING | 2,65mm | | ♦ | ♦ | ♦ | ♦ | ♦ | ♦ | ♦ |
| 82 | K21.04337 | 387 262 0873 | | 1 | 1./GERİ VİTES YILDIZ DİŞLİ SEKMANI | RETAINING RING | 2,60mm | | ♦ | ♦ | ♦ | ♦ | ♦ | ♦ | ♦ |
| 82 | K21.07019 | 387 262 0773 | | 1 | 1./GERİ VİTES YILDIZ DİŞLİ SEKMANI | RETAINING RING | 2,55mm | | ♦ | ♦ | ♦ | ♦ | ♦ | ♦ | ♦ |
| 82 | K21.04352 | 387 262 0673 | | 1 | 1./GERİ VİTES YILDIZ DİŞLİ SEKMANI | RETAINING RING | 2,50mm | | ♦ | ♦ | ♦ | ♦ | ♦ | ♦ | ♦ |
| 82 | K21.07018 | 387 262 0573 | | 1 | 1./GERİ VİTES YILDIZ DİŞLİ SEKMANI | RETAINING RING | 2,45mm | | ♦ | ♦ | ♦ | ♦ | ♦ | ♦ | ♦ |
| 82 | K21.04336 | 387 262 0473 | | 1 | 1./GERİ VİTES YILDIZ DİŞLİ SEKMANI | RETAINING RING | 2,40mm | | ♦ | ♦ | ♦ | ♦ | ♦ | ♦ | ♦ |
| 83 | K21.03828 | 022 981 2310 | (022 981 2210) | 1 | GERİ VİTES MASURA BİLYA | NEEDLE CAGE | 64X72X44,6mm | (A)(D) | ♦ | ♦ | ♦ | ♦ | ♦ | ♦ | ♦ |
| 83 | K21.03842 | 023 981 3010 | | 1 | GERİ VİTES MASURA BİLYA | NEEDLE CAGE | 64X72X45mm | (B)(C) | ♦ | ♦ | | | | | |
| 84 | K21.03470 | 947 262 1933 | (947 262 2533) | 1 | GERİ VİTES DİŞLİSİ 41 DİŞ | REVERSE GEAR 41 T . | | (A)(D) | ♦ | ♦ | ♦ | ♦ | ♦ | ♦ | ♦ |
| | | | (948 262 0033) | | | | | | | | | | | | |
| 84 | K21.03290 | 947 262 1633 | (947 262 1533) | 1 | GERİ VİTES DİŞLİSİ 41 DİŞ | REVERSE GEAR 41 T . | | (B)(C) | ♦ | ♦ | | | | | |
| | | | (947 262 1433) | | | | | | | | | | | | |
| 85 | K21.03856 | 018 981 5705 | | 1 | KAMALI MİL ARKA BİLYA | ROLLER BEARING | 55X110X40mm | (A)(1) | ♦ | ♦ | | | | ♦ | |
| 85 | K21.03637 | 016 981 4405 | (002 981 7981) | 1 | KAMALI MİL ARKA BİLYA | ROLLER BEARING | 55X110X38mm | (B)(C)(1) | ♦ | ♦ | | | | | |
| 86 | | 947 262 0828 | | 1 | KAMALI MİL ARKA BİLYA OKUYUCU SAÇ | PULSE DISK | | | ♦ | ♦ | ♦ | ♦ | ♦ | | |
| 87 | K21.03857 | 002 980 9502 | | 1 | KAMALI MİL ARKA BİLYA | ROLLER BEARING | 55X110X40mm | (A)(1) | ♦ | ♦ | | | | ♦ | |
| 87 | K21.03860 | 003 980 0602 | | 1 | KAMALI MİL ARKA BİLYA | ROLLER BEARING | 55X130X51mm | (D)(2) | | | ♦ | ♦ | ♦ | | ♦ |
| 88 | K21.04320 | | | 1 | KAMALI MİL ARKA BİLYA RAYNELİ | THRUST WASHER | 0,50mm | (1) | ♦ | ♦ | | | | ♦ | |
| 88 | K21.04318 | | | 1 | KAMALI MİL ARKA BİLYA RAYNELİ | THRUST WASHER | 0,30mm | (1) | ♦ | ♦ | | | | ♦ | |
| 88 | K21.04319 | | | 1 | KAMALI MİL ARKA BİLYA RAYNELİ | THRUST WASHER | 0,25mm | (1) | ♦ | ♦ | | | | ♦ | |
| 88 | K21.04182 | 389 262 3552 | | 1 | KAMALI MİL ARKA BİLYA RAYNELİ | THRUST WASHER | 0,10mm | (2) | | | ♦ | ♦ | ♦ | | ♦ |
| 88 | K21.04184 | 389 262 3652 | | 1 | KAMALI MİL ARKA BİLYA RAYNELİ | THRUST WASHER | 0,15mm | (2) | | | ♦ | ♦ | ♦ | | ♦ |
| 88 | K21.04152 | 389 262 3752 | | 1 | KAMALI MİL ARKA BİLYA RAYNELİ | THRUST WASHER | 0,20mm | (2) | | | ♦ | ♦ | ♦ | | ♦ |
| 88 | K21.94152 | | | 1 | KAMALI MİL ARKA BİLYA RAYNELİ | THRUST WASHER | 0,30mm | (2) | | | ♦ | ♦ | ♦ | | ♦ |
| 88 | K21.04183 | 389 262 3852 | | 1 | KAMALI MİL ARKA BİLYA RAYNELİ | THRUST WASHER | 0,40mm | (2) | | | ♦ | ♦ | ♦ | | ♦ |
| 88 | K21.94183 | | | 1 | KAMALI MİL ARKA BİLYA RAYNELİ | THRUST WASHER | 0,50mm | (2) | | | ♦ | ♦ | ♦ | | ♦ |
| 88 | K21.04185 | 389 262 3952 | | 1 | KAMALI MİL ARKA BİLYA RAYNELİ | THRUST WASHER | 0,80mm | (2) | | | ♦ | ♦ | ♦ | | ♦ |
| 88 | K21.06718 | 010 990 8382 | | 1 | KAMALI MİL ARKA BİLYA RAYNELİ | THRUST WASHER | 1,00mm | (2) | | | ♦ | ♦ | ♦ | | ♦ |
| 89 | K21.06670 | 000471 048000 | | 1 | KAMALI MİL ARKA BİLYA SEKMANI | RETAINING RING | 1,75mm | | ♦ | ♦ | ♦ | ♦ | ♦ | ♦ | ♦ |
| 89 | K21.04331 | 007 994 1841 | (006 994 9941) | 1 | KAMALI MİL ARKA BİLYA SEKMANI | RETAINING RING | 2,50mm | | ♦ | ♦ | | | | | |
| 90 | K21.03431 | 960 265 0049 | (947 265 0349) | 2 | TAKVİYE HİLAL PABUCU | SLIDING PAD | | | ♦ | ♦ | ♦ | ♦ | ♦ | ♦ | ♦ |
| | | | (389 265 2749) | | | | | | | | | | | | |

NOTES :
Parts encoded alphabetic and numaric are used together.

GEARBOX TYPE:
715350 - 715351 - 715358 - G211-12 KL /14,93 - 1,00
715352 - 715354 -715356 - 715359 - G211-12 KL /14,93 - 1,00

NOTLAR :
Alfabetik ve rakam ile kodlanan parçalar birlikte kullanılır.

ŞANZIMAN TİPLERİ:
715350 - 715351 - 715358 - G211-12 KL /14,93 - 1,00
715352 - 715354 -715356 - 715359 - G211-12 KL /14,93 - 1,00





Original parts names, oem numbers, symbols and descriptions used in this catalogue are for reference purposes only.

# GEARBOX G 211-12 KL / 14,93 - 1,0

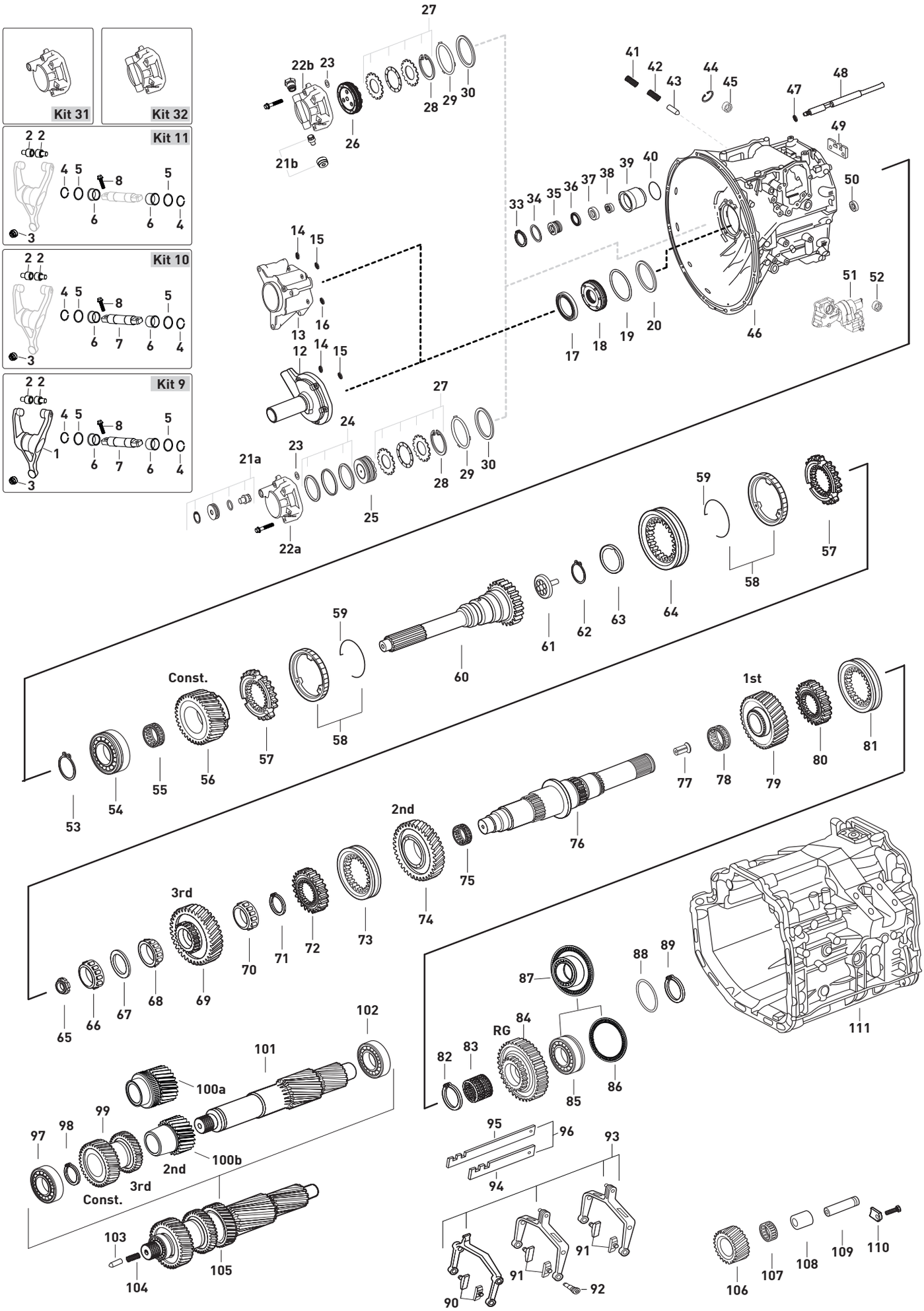




Original parts names, oem numbers, symbols and descriptions used in this catalogue are for reference purposes only.

| Fig. | Kacmaz No | Oem No | Oem Old No | Pcs. | Ürün Tanımı | Description | Sizes | Not | 715350 | 715351 | 715352 | 715354 | 715356 | 715358 | 715359 |
|---|---|---|---|---|---|---|---|---|---|---|---|---|---|---|---|
| 91 | K21.03565 | 947 265 0449 | | 4 | 1./2./3./GERİ VİTES HİLAL PABUCU | SLIDING PAD | | | ♦ | ♦ | ♦ | ♦ | ♦ | ♦ | ♦ |
| 92 | K21.04308 | 960 265 0874 | (945 265 1374) | 2 | HİLAL CİVATASI | PIN | | | ♦ | ♦ | ♦ | ♦ | ♦ | ♦ | ♦ |
| | | | (960 265 0674) | | | | | | | | | | | | |
| 93 | | 947 260 3530 | | Kit | VİTES HİLAL TAKIMI | REPAIR KIT | | | ♦ | ♦ | | | | ♦ | |
| 93 | | 960 260 4030 | | Kit | VİTES HİLAL TAKIMI | REPAIR KIT | | | | | ♦ | ♦ | ♦ | | ♦ |
| 94 | | 947 265 3404 | | 1 | 2./ 3.VİT.HİLAL ÇITASI | SHIFTING ROD | | | ♦ | ♦ | ♦ | ♦ | ♦ | ♦ | ♦ |
| 95 | | 947 265 3104 | | 1 | 1./ R.VİT.HİLAL ÇITASI | SHIFTING ROD | | | ♦ | ♦ | ♦ | ♦ | ♦ | ♦ | ♦ |
| 96 | | 947 260 0331 | | Kit | VİTES HİLAL ÇITA TAKIMI | REPAIR KIT | | | ♦ | ♦ | ♦ | ♦ | ♦ | ♦ | ♦ |
| 97 | K21.03606 | 015 981 9005 | (014 981 1405) | 1 | GRUP MİLİ ÖN BİLYA | ROLLER BEARING | 50,8X100X35mm | | ♦ | ♦ | ♦ | ♦ | ♦ | ♦ | ♦ |
| | | | (012 981 7405) | | | | | | | | | | | | |
| | | | (012 981 5105) | | | | | | | | | | | | |
| 98 | K21.06426 | 900055 060300 | (000 264 5351) | 1 | GRUP MİLİ ÖN BİLYA SEKMANI | RETAINING RING | 3,00mm | | ♦ | ♦ | ♦ | ♦ | ♦ | ♦ | ♦ |
| 99 | K21.03297 | 947 263 2910 | | 1 | TAK. VE 3.VİTES DİŞLİ KARŞ. 33/36 DİŞ | DOUBLE GEAR Const./3rd 33/36 T. | | | ♦ | ♦ | ♦ | ♦ | ♦ | ♦ | ♦ |
| 100a | K21.06393 | 947 260 3519 | | 1 | 2.VİT.DİŞLİ KARŞILIĞI 23 DİŞ (Devir Sensörlü) | GEAR 2nd 23 T.(With Speed Sensor) | | | ♦ | ♦ | ♦ | ♦ | ♦ | ♦ | ♦ |
| 100b | K21.03298 | 947 263 0512 | (947 263 0312) | 1 | 2.VİT.DİŞLİ KARŞILIĞI 23 DİŞ (Devir sensörsüz) | GEAR 2nd 23 T.(W/Out speed sensor) | | | ♦ | ♦ | | | | ♦ | |
| | | | (947 263 0212) | | | | | | | | | | | | |
| | | | (947 263 0112) | | | | | | | | | | | | |
| 101 | K21.03302 | 947 263 2402 | | 1 | GRUP MİLİ 15/15/18/16 DİŞ | COUNTER SHAFT 15/15/18/16 T. | | | ♦ | ♦ | ♦ | ♦ | ♦ | ♦ | ♦ |
| 102 | K21.03665 | 019 981 6105 | (002 981 7781) | 1 | GRUP MİLİ ARKA BİLYA | ROLLER BEARING | 60X110X34mm | | ♦ | ♦ | ♦ | ♦ | ♦ | ♦ | ♦ |
| 103 | K21.03492 | 389 267 1174 | (387 267 0074) | 1 | KİLİT FİŞEĞİ | PIN | | | ♦ | ♦ | ♦ | ♦ | ♦ | ♦ | ♦ |
| 104 | K21.03500 | 387 993 4401 | (387 993 2501) | 1 | KİLİT YAYI | SPRING | 9,8X63,3mm | | ♦ | ♦ | ♦ | ♦ | ♦ | ♦ | ♦ |
| 105 | K21.06421 | | | Kit | GRUP MİLİ KOMPLE (Devir sensörsüz) | COUNT.SHAFT COMP.(W/Out Sensor) | | | ♦ | ♦ | | | | ♦ | |
| 105 | K21.03594 | 947 260 4424 | (947 260 2624) | Kit | GRUP MİLİ KOMPLE (Sensörlü) | COUNT.SHAFT COMP.(With Sensor) | | | ♦ | ♦ | ♦ | ♦ | ♦ | ♦ | ♦ |
| | | | (947 260 3124) | | | | | | | | | | | | |
| 106 | K21.06309 | 947 263 1531 | (948 263 0031) | 1 | KÜÇÜK GERİ VİTES DİŞLİSİ 19 DİŞ | REVERSE IDLER GEAR 19 T. | | (V) | ♦ | ♦ | ♦ | ♦ | ♦ | ♦ | ♦ |
| | | | (948 263 0731) | | | | | | | | | | | | |
| 106 | K21.06491 | 947 263 1431 | (947 263 1231) | 1 | KÜÇÜK GERİ VİTES DİŞLİSİ 19 DİŞ | REVERSE IDLER GEAR 19 T. | | (Z) | ♦ | ♦ | | | | | |
| | | | (947 263 1131) | | | | | | | | | | | | |
| | | | (947 263 1031) | | | | | | | | | | | | |
| 107 | | 023 981 3110 | (003 981 2818) | 1 | KÜÇÜK GERİ VİTES MASURA BİLYA | NEEDLE CAGE | 40X50X42mm | (V) | ♦ | ♦ | ♦ | ♦ | ♦ | ♦ | ♦ |
| | | | (004 981 1518) | | | | | | | | | | | | |
| 107 | K21.03843 | 021 981 5610 | (021 981 2010) | 1 | KÜÇÜK GERİ VİTES MASURA BİLYA | NEEDLE CAGE | 42X50X40mm | (Z) | ♦ | ♦ | | | | | |
| 108 | K21.06495 | 947 992 0103 | | 1 | KÜÇÜK GERİ VİTES MAS.BİLYA ÇANAĞI | BUSHING | | (V) | ♦ | ♦ | ♦ | ♦ | ♦ | ♦ | ♦ |
| 108 | K21.06069 | 947 263 0050 | | 1 | KÜÇÜK GERİ VİTES MAS.BİLYA ÇANAĞI | BUSHING | | (Z) | ♦ | ♦ | | | | | |
| 109 | K21.06037 | 976 263 0030 | (976 263 1230) | 1 | KÜÇÜK GERİ VİTES PİMİ | PIN | | | ♦ | ♦ | ♦ | ♦ | ♦ | ♦ | ♦ |
| 110 | K21.07010 | 945 263 0041 | | 1 | KÜÇÜK GERİ VİTES PİM KİLİTLEMESİ | KEY | | | ♦ | ♦ | ♦ | ♦ | ♦ | ♦ | ♦ |
| 111 | | 947 261 1026 | | 1 | ŞANZIMAN ORTA GÖVDE | HOUSING | | | ♦ | | | | | ♦ | |
| 111 | | 947 261 1426 | | 1 | ŞANZIMAN ORTA GÖVDE | HOUSING | | | ♦ | | | | | | |
| 111 | | 960 261 0726 | | 1 | ŞANZIMAN ORTA GÖVDE | HOUSING | | | | | ♦ | | | | |
| 111 | | 960 260 2623 | | 1 | ŞANZIMAN ORTA GÖVDE | HOUSING | | | | | ♦ | | | | |
| 111 | | 960 260 0223 | | 1 | ŞANZIMAN ORTA GÖVDE | HOUSING | | | | | ♦ | | | | |
| 111 | | 960 260 2423 | | 1 | ŞANZIMAN ORTA GÖVDE | HOUSING | | | | | ♦ | | | | |
| 111 | | 960 260 2723 | | 1 | ŞANZIMAN ORTA GÖVDE | HOUSING | | | | | ♦ | | ♦ | | ♦ |
| 111 | | 960 261 1026 | | 1 | ŞANZIMAN ORTA GÖVDE | HOUSING | | | | | | ♦ | | | |
| 111 | | 947 261 9603 | | 1 | ŞANZIMAN ORTA GÖVDE | HOUSING | | | ♦ | ♦ | | | | | |
| 111 | | 947 261 9503 | | 1 | ŞANZIMAN ORTA GÖVDE | HOUSING | | | ♦ | ♦ | | | | | |

NOTES :
Parts encoded alphabetic and numaric are used together.

GEARBOX TYPE:
715350 - 715351 - 715358 - G211-12 KL /14,93 - 1,00
715352 - 715354 -715356 - 715359 - G211-12 KL /14,93 - 1,00

NOTLAR :
Alfabetik ve rakam ile kodlanan parçalar birlikte kullanılır.

ŞANZIMAN TİPLERİ:
715350 - 715351 - 715358 - G211-12 KL /14,93 - 1,00
715352 - 715354 -715356 - 715359 - G211-12 KL /14,93 - 1,00





Original parts names, oem numbers, symbols and descriptions used in this catalogue are for reference purposes only.

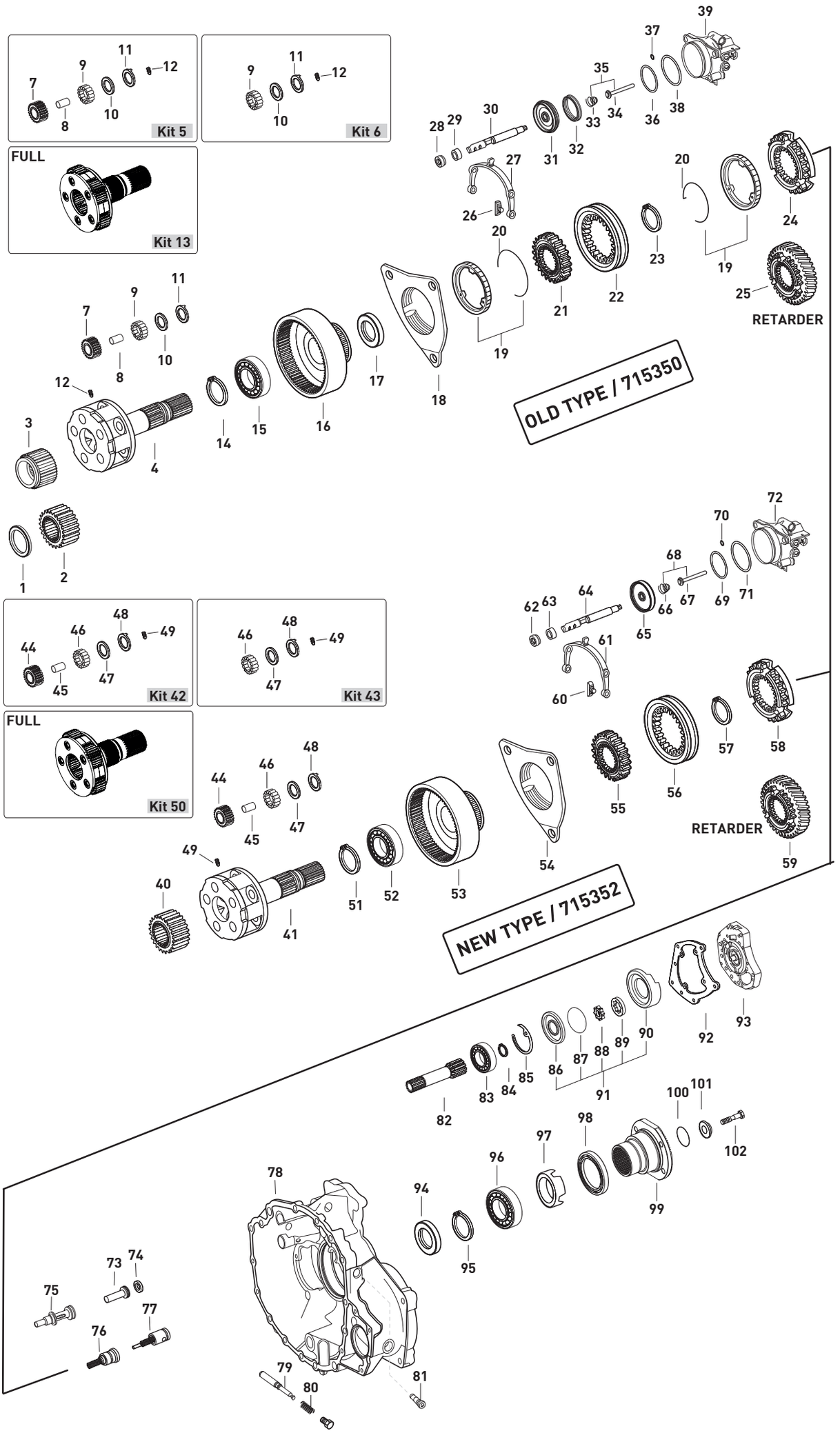






Original parts names, oem numbers, symbols and descriptions used in this catalogue are for reference purposes only.

| Fig. | Kacmaz No | Oem No | Oem Old No | Pcs. | Ürün Tanımı | Description | Sizes | Not | 715350 | 715351 | 715352 | 715354 | 715356 | 715358 | 715359 |
|---|---|---|---|---|---|---|---|---|---|---|---|---|---|---|---|
| 1 | K21.04135 | 947 990 0882 | | 1 | GÜNEŞ DİŞLİ PULU | THRUST WASHER | | | ♦ | ♦ | | | | | |
| 2 | K21.03294 | 947 262 1209 | | 1 | GÜNEŞ DİŞLİ 25 DİŞ | SUN GEAR 25 T. | | | ♦ | ♦ | | | ♦ | | |
| 3 | K21.06306 | 947 262 1609 | | 1 | GÜNEŞ DİŞLİ 25 DİŞ | SUN GEAR 25 T. | | | ♦ | ♦ | | | | ♦ | |
| 4 | K21.03304 | 947 260 6361 | | 1 | ŞANZIMAN HEYKELİ (BOŞ) | PLANETARY CARRIER (EMPTY) | | | ♦ | ♦ | | | ♦ | ♦ | |
| 5 | K21.03303 | 947 260 0297 | (947 260 0197) | Kit | HEYKEL KOZA DİŞLİ TAKIMI | PLANETARY GEAR SET | | | ♦ | ♦ | | | ♦ | ♦ | |
| 6 | K21.04351 | | | Kit | HEYKEL KOZA DİŞLİ PUL TAKIMI | REPAIR KIT | | | ♦ | ♦ | | | ♦ | ♦ | |
| 7 | K21.06350 | | | 5 | HEYKEL KOZA DİŞLİSİ | PLANETARY GEAR | | | ♦ | ♦ | | | ♦ | ♦ | |
| 8 | K21.06349 | | | 5 | HEYKEL KOZA DİŞLİ PİMİ | PLANETARY PIN | | | ♦ | ♦ | | | ♦ | ♦ | |
| 9 | K21.03821 | | | 125 | HEYKEL KOZA DİŞLİ TANE BİLYA | NEEDLE ROLLER | D5X42,65 | | ♦ | ♦ | | | ♦ | ♦ | |
| 10 | K21.04074 | 389 262 0162 | (389 262 6462) | 10 | HEYKEL KOZA DİŞLİ PULU | THRUST WASHER | | | ♦ | ♦ | | | ♦ | ♦ | |
| | | | (389 262 0562) | | | | | | | | | | | | |
| 11 | K21.04075 | 945 262 1162 | (945 262 0162) | 10 | HEYKEL KOZA DİŞLİ PULU | THRUST WASHER | | | ♦ | ♦ | | | ♦ | ♦ | |
| | | | (389 262 1462) | | | | | | | | | | | | |
| | | | (389 262 1362) | | | | | | | | | | | | |
| | | | (389 262 1162) | | | | | | | | | | | | |
| 12 | K21.03418 | 000914 006109 | | 5 | HEYKEL KOZA DİŞLİ VİDASI | THREADED PIN | M6X14 | | ♦ | ♦ | | | ♦ | ♦ | |
| 13 | K21.03684 | | | Kit | ŞANZIMAN HEYKELİ (DOLU) | PLANETARY CARRIER (FULL) | | | ♦ | ♦ | | | ♦ | ♦ | |
| 14 | K21.06864 | 000472 130000 | | 1 | ÇEMBER DİŞLİ BİLYA SEKMANI | RETAINING RING | 130X4mm | | ♦ | ♦ | | | ♦ | ♦ | |
| 15 | K21.03614 | 008 981 1325 | (004 981 8725) | 1 | ÇEMBER DİŞLİ BİLYASI | ROLLER BEARING | 90X130X14mm | | ♦ | ♦ | | | ♦ | ♦ | |
| | | | (004 981 8825) | | | | | | | | | | | | |
| | | | (004 981 9425) | | | | | | | | | | | | |
| 16 | K21.03471 | 947 262 2808 | (947 262 2508) | 1 | PLANET ÇEMBER DİŞLİ 85 DİŞ | CROWN GEAR 85 T. | | | ♦ | ♦ | | | ♦ | ♦ | |
| | | | (947 262 2408) | | | | | | | | | | | | |
| 17 | K21.04076 | 389 262 0251 | | 1 | ŞANZIMAN HEYKELİ ARA PULU | SPACER RING | | | ♦ | ♦ | | | ♦ | ♦ | |
| 18 | K21.03305 | 947 260 0736 | | 1 | TABLA SENKROMENÇ | FOLLOWER RING | | | ♦ | ♦ | | | ♦ | ♦ | |
| 19 | K21.03185 | 947 260 0945 | | 2 | AĞIR SERİ FRENLEME (Mo) | SYNCHRONIZING CONE / Mo | | | ♦ | ♦ | | | ♦ | ♦ | |
| 19 | K21.06273 | 947 260 3045 | | 2 | AĞIR SERİ FRENLEME (C) | SYNCHRONIZING CONE | | | ♦ | ♦ | | | ♦ | ♦ | |
| 20 | K21.03077 | 389 262 0293 | | 2 | FRENLEME TELİ | SPRING | | | ♦ | ♦ | | | ♦ | ♦ | |
| 21 | K21.03079 | 389 262 4935 | (389 262 2035) | 1 | AĞIR SERİ YILDIZ DİŞLİ 73 DİŞ | SYNCHRONIZER HUB 73 T. | | | ♦ | ♦ | | | ♦ | ♦ | |
| 22 | K21.03033 | 945 262 6923 | (930 262 0623) | 1 | AĞIR SERİ HALKA | ENGAGING SLEEVE | | | ♦ | ♦ | | | ♦ | ♦ | |
| 23 | K21.04356 | 000471 120000 | | 1 | AĞIR SERİ YILDIZ DİŞLİ SEKMANI | RETAINING RING | | | ♦ | ♦ | | | ♦ | ♦ | |
| 24 | K21.03306 | 947 262 0634 | | 1 | SERİ SENKROMENÇ | ENGAGING RING | | | ♦ | ♦ | | | ♦ | ♦ | |
| 25 | K21.03307 | 947 264 0420 | | 1 | RETARDER DİŞLİSİ 59 DİŞ | RETARDER GEAR 59 T. | | | ♦ | ♦ | | | ♦ | ♦ | |
| 26 | K21.03431 | 960 265 0049 | (947 265 0349) | 2 | AĞIR SERİ HİLAL PABUCU | SLIDING PAD | | | ♦ | ♦ | | | ♦ | ♦ | |
| | | | (389 265 2749) | | | | | | | | | | | | |
| 27 | K21.06324 | 947 265 1901 | (947 265 0901) | 1 | AĞIR SERİ HİLALİ | SHIFTING FORK | | | ♦ | ♦ | | | ♦ | ♦ | |
| 28 | K21.03523 | 000 267 0197 | (000 267 0397) | 1 | AĞIR SERİ HİLAL MİL KEÇESİ | OIL SEAL | 22X32X8mm | | ♦ | ♦ | | | ♦ | ♦ | |
| 29 | K21.04178 | 387 267 0650 | (387 267 0250) | 1 | AĞIR SERİ HİLAL MİL BURCU | BUSHING | 34x22x8mm | | ♦ | ♦ | | | ♦ | ♦ | |
| 30 | | 945 267 2117 | (389 267 7317) | 1 | AĞIR SERİ HİLAL MİLİ | SHIFTING ROD | | | ♦ | ♦ | | | | ♦ | |
| 30 | K21.06492 | 930 267 0217 | (945 267 2217) | 1 | AĞIR SERİ HİLAL MİLİ | SHIFTING ROD | | | ♦ | ♦ | | | | | |
| 30 | | 960 267 2917 | | 1 | AĞIR SERİ HİLAL MİLİ | SHIFTING ROD | | | | | | | ♦ | | |
| 31 | K21.06499 | 930 267 0618 | | 1 | AĞIR SERİ HİLAL MİL PİSTONU | PISTON | | | ♦ | ♦ | | | ♦ | ♦ | |
| 32 | K21.03525 | 024 997 8347 | (020 997 6747) | 1 | AĞIR SERİ SİLİNDİR KEÇESİ | SEAL RING | 77X90X17mm | | ♦ | ♦ | | | ♦ | ♦ | |
| | | | (014 997 3647) | | | | | | | | | | | | |
| | | | (014 997 5147) | | | | | | | | | | | | |
| 33 | K21.04255 | 008 993 0801 | (000 993 6705) | 1 | OKUYUCU MİL YAYI | SPRING | 9,7X7,7X8,1mm | | ♦ | ♦ | | | ♦ | ♦ | |
| 34 | K21.04257 | 000 543 5785 | | 1 | OKUYUCU MİLİ | MAGNETIC PISTON | | | ♦ | ♦ | | | ♦ | ♦ | |
| 35 | K21.07049 | 960 543 0285 | | Kit | OKUYUCU MİL-YAY TAKIMI | REPAIR KIT | | | ♦ | ♦ | | | ♦ | ♦ | |
| 36 | K21.06399 | 013 997 7548 | | 1 | AĞIR SERİ SİLİNDİR ORİNGİ | O-RING | 89,5X3mm | | ♦ | ♦ | | | ♦ | ♦ | |
| 37 | K21.06636 | 015 997 4048 | (020 997 8748) | 1 | AĞIR SERİ SİLİNDİR ORİNGİ | O-RING | 5X3mm | | ♦ | ♦ | | | ♦ | ♦ | |
| 38 | K21.06968 | 017 997 6545 | | 1 | AĞIR SERİ SİLİNDİR ORİNGİ | O-RING | 96X1,5mm | | ♦ | ♦ | | | ♦ | ♦ | |
| 39 | | 002 260 9563 | | 1 | AĞIR SERİ SİLİNDİRİ | SHIFT CYLINDER | | | ♦ | ♦ | | | | ♦ | |
| 39 | | 003 260 5663 | (003 260 3963) | 1 | AĞIR SERİ SİLİNDİRİ | SHIFT CYLINDER | | | | | | | ♦ | | |

NOTES :
Parts encoded alphabetic and numaric are used together.

GEARBOX TYPE:
715350 - 715351 - 715358 - G211-12 KL /14,93 - 1,00
715352 - 715354 -715356 - 715359 - G211-12 KL /14,93 - 1,00

NOTLAR :
Alfabetik ve rakam ile kodlanan parçalar birlikte kullanılır.

ŞANZIMAN TİPLERİ:
715350 - 715351 - 715358 - G211-12 KL /14,93 - 1,00
715352 - 715354 -715356 - 715359 - G211-12 KL /14,93 - 1,00





Original parts names, oem numbers, symbols and descriptions used in this catalogue are for reference purposes only.

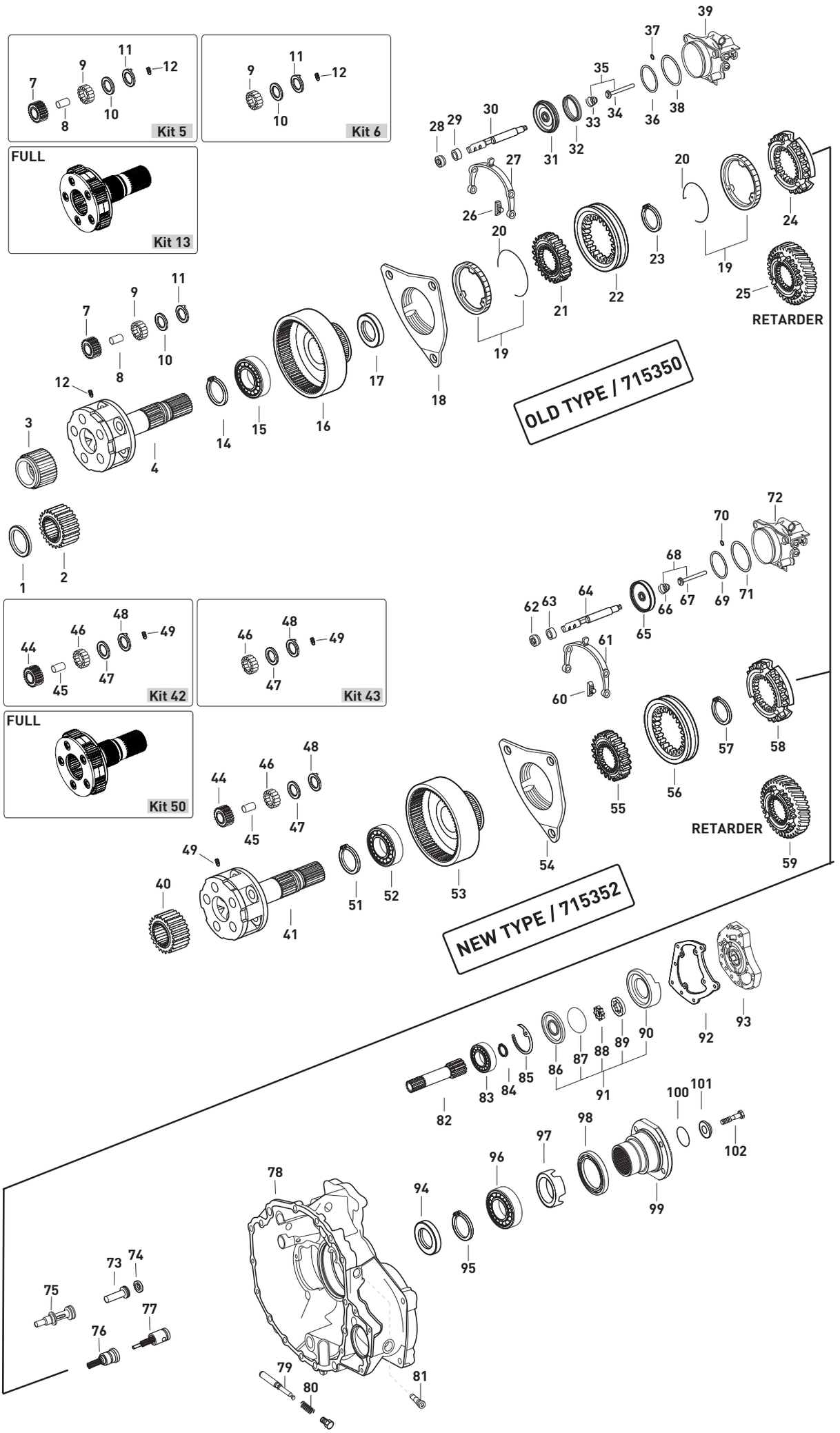






Original parts names, oem numbers, symbols and descriptions used in this catalogue are for reference purposes only.

| Fig. | Kacmaz No | Oem No | Oem Old No | Pcs. | Ürün Tanımı | Description | Sizes | Not | 715350 | 715351 | 715352 | 715354 | 715356 | 715358 | 715359 |
|---|---|---|---|---|---|---|---|---|---|---|---|---|---|---|---|
| 40 | K21.03294 | 947 262 1209 | | 1 | GÜNEŞ DİŞLİ 25 DİŞ | SUN GEAR 25 T. | | | | | ♦ | ♦ | | | ♦ |
| 41 | K21.06905 | 947 260 9661 | (947 260 9561) | 1 | ŞANZIMAN HEYKELİ (BOŞ) | PLANETARY CARRIER (EMPTY) | | | | | ♦ | ♦ | | | ♦ |
| 42 | K21.06714 | 947 260 0397 | | 1 | HEYKEL KOZA DİŞLİ TAKIMI | PLANETARY GEAR SET | | | | | ♦ | ♦ | | | ♦ |
| 43 | K21.03663 | | | Kit | HEYKEL BİLYA VE PUL TAKIMI | WASHER KIT | | | | | ♦ | ♦ | | | ♦ |
| 44 | K21.06974 | | | 5 | HEYKEL KOZA DİŞLİ 28 DİŞ | PLANETARY GEAR 28 T. | | | | | ♦ | ♦ | | | ♦ |
| 45 | K21.06349 | | | 5 | HEYKEL KOZA DİŞLİ PİMİ | PLANETARY PIN | | | | | ♦ | ♦ | | | ♦ |
| 46 | K21.03816 | 000 981 4186 | (000 981 4386) | 125 | HEYKEL KOZA DİŞLİ TANE BİLYA | NEEDLE ROLLER | D5X39,6 | | | | ♦ | ♦ | | | ♦ |
| 47 | K21.04074 | 389 262 0162 | (389 262 6462) | 10 | HEYKEL KOZA DİŞLİ PULU | THRUST WASHER | | | | | ♦ | ♦ | | | ♦ |
| 48 | K21.04075 | 945 262 1162 | (945 262 0162) | 10 | HEYKEL KOZA DİŞLİ PULU | THRUST WASHER | | | | | ♦ | ♦ | | | ♦ |
| | | | (389 262 1462) | | | | | | | | | | | | |
| | | | (389 262 1362) | | | | | | | | | | | | |
| | | | (389 262 1162) | | | | | | | | | | | | |
| 49 | K21.03418 | 000914006109 | | 5 | HEYKEL KOZA DİŞLİ VİDASI | THREADED PIN | M6X14 | | | | ♦ | ♦ | | | ♦ |
| 50 | K21.06972 | | | Kit | ŞANZIMAN HEYKELİ (DOLU) | PLANETARY CARRIER (FULL) | | | | | ♦ | ♦ | | | ♦ |
| 51 | K21.06864 | 000472 130000 | | 1 | ÇEMBER DİŞLİ BİLYA SEKMANI | RETAINING RING | 130X4mm | | | | ♦ | ♦ | | | ♦ |
| 52 | K21.03614 | 008 981 1325 | (004 981 8725) | 1 | ÇEMBER DİŞLİ BİLYASI | ROLLER BEARING | 90X130X14mm | | | | ♦ | ♦ | | | ♦ |
| | | | (004 981 8825) | | | | | | | | | | | | |
| | | | (004 981 9425) | | | | | | | | | | | | |
| 53 | K21.03471 | 947 262 2808 | (947 262 2508) | 1 | ÇEMBER DİŞLİ 85 DİŞ | CROWN GEAR 85 T. | | | | | ♦ | ♦ | | | ♦ |
| | | | (947 262 2408) | | | | | | | | | | | | |
| 54 | K21.06593 | 960 260 2236 | | 1 | TABLA SENKROMENÇ | FOLLOWER RING | | (A) | | | ♦ | ♦ | | | ♦ |
| 54 | | 960 260 1836 | | 1 | TABLA SENKROMENÇ | FOLLOWER RING | | (B) | | | ♦ | | | | |
| 55 | K21.03079 | 389 262 4935 | (389 262 2035) | 1 | AĞIR SERİ YILDIZ DİŞLİ 73 DİŞ. | SYNCHRONIZER HUB 73 T. | | | | | ♦ | ♦ | | | ♦ |
| 56 | K21.06594 | 960 262 1323 | | 1 | AĞIR SERİ HALKA | ENGAGING SLEEVE | | (A) | | | ♦ | ♦ | | | ♦ |
| 56 | | 960 262 0823 | | 1 | AĞIR SERİ HALKA | ENGAGING SLEEVE | | (B) | | | ♦ | | | | |
| 57 | K21.04356 | 000471 120000 | | 1 | AĞIR SERİ YILDIZ DİŞLİ SEKMANI | RETAINING RING | | | | | ♦ | ♦ | | | ♦ |
| 58 | K21.06535 | 960 262 2734 | | 1 | SERİ SENKROMENÇ | ENGAGING RING | | (A) | | | ♦ | ♦ | | | ♦ |
| 58 | | 960 262 1834 | | 1 | SERİ SENKROMENÇ | ENGAGING RING | | (B) | | | ♦ | | | | |
| 59 | | 960 264 2620 | | 1 | RETARDER DİŞLİSİ 59 DİŞ | RETARDER GEAR 59 T. | | (A) | | | ♦ | ♦ | | | |
| 59 | | 960 264 2020 | | 1 | RETARDER DİŞLİSİ | RETARDER GEAR | | (B) | | | ♦ | | | | |
| 60 | K21.03431 | 960 265 0049 | (947 265 0349) | 2 | AĞIR SERİ HİLAL PABUCU | SLIDING PAD | | | | | ♦ | ♦ | | | ♦ |
| 61 | K21.06324 | 947 265 1901 | (947 265 0901) | 1 | AĞIR SERİ HİLALİ | SHIFTING FORK | | | | | ♦ | ♦ | | | ♦ |
| 61 | | 960 265 3501 | | 1 | AĞIR SERİ HİLALİ | SHIFTING FORK | | | | | | | | | ♦ |
| 62 | K21.03523 | 000 267 0197 | (000 267 0397) | 1 | AĞIR SERİ HİLAL MİL KEÇESİ | OIL SEAL | 22X32X8mm | | | | ♦ | ♦ | | | ♦ |
| 63 | K21.04178 | 387 267 0650 | (387 267 0250) | 1 | AĞIR SERİ HİLAL MİL BURCU | BUSHING | 34x22x8mm | | | | ♦ | ♦ | | | ♦ |
| 64 | | 960 267 2917 | | 1 | AĞIR SERİ HİLAL MİLİ | SHIFTING ROD | | | | | ♦ | ♦ | | | |
| 64 | | 960 267 8617 | | 1 | AĞIR SERİ HİLAL MİLİ | SHIFTING ROD | | | | | | | | | ♦ |
| 64 | K21.06496 | 960 267 4817 | (960 267 0617) | 1 | AĞIR SERİ HİLAL MİLİ | SHIFTING ROD | | | | | ♦ | ♦ | ♦ | | |
| | | | (960 267 0017) | | | | | | | | | | | | |
| 64 | K21.06966 | 960 267 5117 | (960 267 3017) | 1 | AĞIR SERİ HİLAL MİLİ | SHIFTING ROD | | | | | ♦ | ♦ | ♦ | | |
| 65 | K21.06497 | 960 267 0118 | | 1 | AĞIR SERİ HİLAL MİL PİSTONU | PISTON | tire sticked | | | | ♦ | ♦ | | | ♦ |
| 66 | K21.04255 | 008 993 0801 | (000 993 6705) | 1 | OKUYUCU MİL YAYI | SPRING | 9,7X7,7X8,1mm | | | | ♦ | ♦ | | | ♦ |
| 67 | K21.04257 | 000 543 5785 | | 1 | OKUYUCU MİLİ | MAGNETIC PISTON | | | | | ♦ | ♦ | | | ♦ |
| 68 | K21.07049 | 960 543 0285 | | Kit | OKUYUCU MİL-YAY TAKIMI | REPAIR KIT | | | | | ♦ | ♦ | | | ♦ |
| 69 | K21.06399 | 013 997 7548 | | 1 | AĞIR SERİ SİLİNDİR ORİNGİ | O-RING | 89,5X3mm | | | | ♦ | ♦ | | | ♦ |
| 70 | K21.06636 | 015 997 4048 | (020 997 8748) | 1 | AĞIR SERİ SİLİNDİR ORİNGİ | O-RING | 5X3mm | | | | ♦ | ♦ | | | ♦ |
| 71 | K21.06968 | 017 997 6545 | | 1 | AĞIR SERİ SİLİNDİR ORİNGİ | O-RING | 96X1,5mm | | | | ♦ | ♦ | | | ♦ |
| 72 | | 003 260 5663 | (003 260 3963) | 1 | AĞIR SERİ SİLİNDİRİ | SHIFT CYLINDER | | | | | ♦ | ♦ | | | ♦ |
| | | | (003 260 4063) | | | | | | | | | | | | |
| 73 | K21.06979 | 389 265 0176 | (389 265 0076) | 1 | YAĞ BASINÇ VALFİ ALIN FİBERİ | WASHER | | | ♦ | ♦ | | | | | |
| 74 | K21.04212 | 013 997 0048 | (020 997 8248) | 1 | YAĞ BASINÇ VALF ORİNGİ | O-RING | 19,2X3mm | | ♦ | ♦ | | | | | |
| 75 | | 960 260 3257 | (960 260 1157) | 1 | YAĞ BASINÇ VALFİ ALIN FİBERİ | WASHER | | | | | ♦ | ♦ | ♦ | ♦ | ♦ |
| 76 | K21.06953 | 960 260 1057 | | Kit | YAĞ BASINÇ VALFİ KOMPLE | VALVE KIT | | | ♦ | ♦ | | | | | ♦ |

NOTES :
Parts encoded alphabetic and numaric are used together.

GEARBOX TYPE:
715350 - 715351 - 715358 - G211-12 KL /14,93 - 1,00
715352 - 715354 -715356 - 715359 - G211-12 KL /14,93 - 1,00

NOTLAR :
Alfabetik ve rakam ile kodlanan parçalar birlikte kullanılır.

ŞANZIMAN TİPLERİ:
715350 - 715351 - 715358 - G211-12 KL /14,93 - 1,00
715352 - 715354 -715356 - 715359 - G211-12 KL /14,93 - 1,00

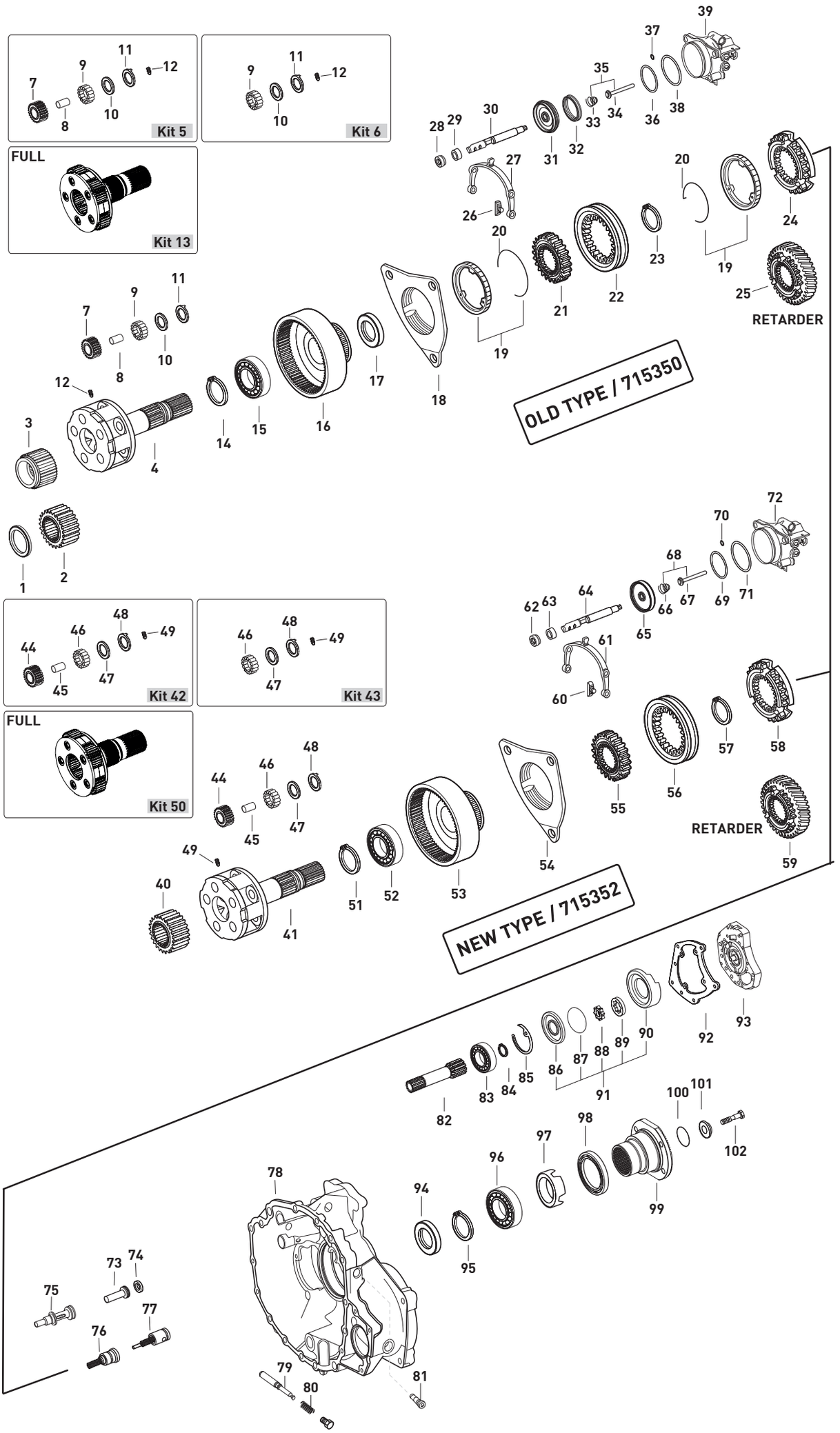






Original parts names, oem numbers, symbols and descriptions used in this catalogue are for reference purposes only.

| Fig. | Kacmaz No | Oem No | Oem Old No | Pcs. | Ürün Tanımı | Description | Sizes | Not | 715350 | 715351 | 715352 | 715354 | 715356 | 715358 | 715359 |
|---|---|---|---|---|---|---|---|---|---|---|---|---|---|---|---|
| 76 | K21.06988 | 960 260 2257 | | Kit | YAĞ BASINÇ VALFİ KOMPLE | VALVE KIT | | | | | ♦ | ♦ | ♦ | ♦ | |
| 77 | K21.06973 | 960 260 1257 | | Kit | YAĞ BASINÇ VALFİ KOMPLE | VALVE KIT | | | ♦ | ♦ | | | | | |
| 77 | K21.06989 | 960 260 2157 | (960 260 3757) | Kit | YAĞ BASINÇ VALFİ KOMPLE | VALVE KIT | | | | | ♦ | ♦ | ♦ | ♦ | |
| 78 | | 947 260 7511 | | 1 | ŞANZIMAN ARKA GÖVDE | HOUSING | | | ♦ | ♦ | | | | ♦ | |
| 78 | | 947 260 8011 | | 1 | ŞANZIMAN ARKA GÖVDE | HOUSING | | | ♦ | ♦ | | | | ♦ | |
| 78 | | 947 260 8411 | | 1 | ŞANZIMAN ARKA GÖVDE | HOUSING | | | ♦ | ♦ | | | | | |
| 78 | | 960 260 5023 | | 1 | ŞANZIMAN ARKA GÖVDE | HOUSING | | | | | ♦ | | ♦ | | |
| 78 | | 960 260 3723 | | 1 | ŞANZIMAN ARKA GÖVDE | HOUSING | | | | | ♦ | ♦ | ♦ | | ♦ |
| 79 | K21.06004 | 945 267 0274 | (389 267 0274) | 1 | AĞIR SERİ KİLİTLEME MİLİ | PIN | | | ♦ | ♦ | ♦ | ♦ | ♦ | ♦ | |
| 79 | | 960 265 0474 | | 1 | AĞIR SERİ KİLİTLEME MİLİ | PIN | | | | | | | | | ♦ |
| 80 | K21.06006 | 389 993 3401 | (389 993 0601) | 1 | AĞIR SERİ KİLİTLEME YAYI | SPRING | | | ♦ | ♦ | ♦ | ♦ | ♦ | ♦ | ♦ |
| 81 | K21.04307 | 960 265 0774 | (945 265 1274) | 2 | HİLAL CİVATASI | PIN | | | ♦ | ♦ | ♦ | ♦ | ♦ | ♦ | ♦ |
| | | | (945 265 2774) | | | | | | | | | | | | |
| | | | (945 265 2974) | | | | | | | | | | | | |
| 82 | K21.03198 | 947 269 1010 | (945 269 1010) | 1 | YAĞ POMPA MİLİ | OIL PUMP SHAFT | | | ♦ | ♦ | ♦ | ♦ | ♦ | ♦ | ♦ |
| 82 | K21.06298 | 947 269 1110 | (945 269 1110) | 1 | YAĞ POMPA MİLİ | OIL PUMP SHAFT | | | ♦ | ♦ | ♦ | | ♦ | ♦ | |
| 83 | K21.03648 | 010 981 9025 | (010 981 8425) | 1 | PTO MİL BİLYASI | ROLLER BEARING | 17X35X10mm | | ♦ | ♦ | ♦ | ♦ | ♦ | ♦ | ♦ |
| | | | (008 981 5425) | | | | | | | | | | | | |
| | | | (008 981 3425) | | | | | | | | | | | | |
| | | | (400 981 2525) | | | | | | | | | | | | |
| 84 | | 912009 045100 | | 1 | YAĞ POMPA EMNİYET SEKMANI | RETAINING RING | | | ♦ | ♦ | ♦ | ♦ | ♦ | ♦ | ♦ |
| 85 | K21.94304 | | | 1 | YAĞ POMPA PULU | SPACER WASHER | 0,70mm | | ♦ | ♦ | ♦ | ♦ | ♦ | ♦ | ♦ |
| 85 | K21.04304 | 389 262 6254 | | 1 | YAĞ POMPA PULU | SPACER WASHER | 0,80mm | | ♦ | ♦ | ♦ | ♦ | ♦ | ♦ | ♦ |
| 85 | K21.04303 | 389 262 5954 | | 1 | YAĞ POMPA PULU | SPACER WASHER | 0,90mm | | ♦ | ♦ | ♦ | ♦ | ♦ | ♦ | ♦ |
| 85 | K21.04302 | 389 262 5754 | | 1 | YAĞ POMPA PULU | SPACER WASHER | 1,00mm | | ♦ | ♦ | ♦ | ♦ | ♦ | ♦ | ♦ |
| 85 | K21.04301 | 389 262 5554 | | 1 | YAĞ POMPA PULU | SPACER WASHER | 1,10mm | | ♦ | ♦ | ♦ | ♦ | ♦ | ♦ | ♦ |
| 85 | K21.04305 | 389 262 5354 | | 1 | YAĞ POMPA PULU | SPACER WASHER | 1,20mm | | ♦ | ♦ | ♦ | ♦ | ♦ | ♦ | ♦ |
| 86 | K21.03412 | 945 269 0201 | (389 269 2501) | 1 | YAĞ POMPA KAPAĞI | OIL PUMP COVER | | | ♦ | ♦ | ♦ | ♦ | ♦ | ♦ | ♦ |
| 87 | K21.03511 | 029 997 5748 | | 1 | YAĞ POMPA ORİNGİ | O-RING | 112X2,5mm | | ♦ | ♦ | ♦ | ♦ | ♦ | ♦ | ♦ |
| 88 | K21.03413 | 389 269 1406 | (389 269 1506) | 1 | YAĞ POMPA İÇ ROTOR | OIL PUMP GEAR | | | ♦ | ♦ | ♦ | ♦ | ♦ | ♦ | ♦ |
| | | | (945 260 0090) | | | | | | | | | | | | |
| 89 | K21.03414 | 389 269 0706 | (389 269 1206) | 1 | YAĞ POMPA DIŞ ROTOR | ROTOR | | | ♦ | ♦ | ♦ | ♦ | ♦ | ♦ | ♦ |
| 90 | K21.03478 | 947 269 1001 | | 1 | YAĞ POMPA GÖVDESİ | OIL PUMP HOUSİNG | | | ♦ | ♦ | ♦ | ♦ | ♦ | ♦ | ♦ |
| 91 | K21.03475 | 389 260 0790 | | 1 | YAĞ POMPASI | OIL PUMP | | | ♦ | ♦ | ♦ | ♦ | ♦ | ♦ | ♦ |
| 92 | K21.03667 | 945 261 0680 | (945 261 0580) | 1 | PTO KAPAK CONTASI | GASKET | | | ♦ | ♦ | ♦ | ♦ | ♦ | ♦ | ♦ |
| | | | (945 261 0080) | | | | | | | | | | | | |
| 93 | K21.03566 | 945 261 1033 | | 1 | PTO KAPAĞI | COVER | | | ♦ | ♦ | ♦ | ♦ | ♦ | ♦ | ♦ |
| 94 | K21.04136 | 947 262 4052 | | 1 | ŞANZIMAN KM DEVİR SAC PULU | SPACER WASHER | | | ♦ | ♦ | ♦ | ♦ | ♦ | ♦ | ♦ |
| 95 | K21.06864 | 000472 130000 | | 1 | ŞANZIMAN HEYKEL BİLYA SEKMANI | RETAINING RING | 130X4mm | | ♦ | ♦ | ♦ | ♦ | ♦ | ♦ | ♦ |
| 96 | K21.03639 | 009 981 3325 | (009 981 3425) | 1 | ŞANZIMAN ARKA BİLYA | ROLLER BEARING | 72X130X25mm | | ♦ | ♦ | ♦ | ♦ | ♦ | ♦ | ♦ |
| | | | (009 981 3525) | | | | | | | | | | | | |
| | | | (009 981 3625) | | | | | | | | | | | | |
| 97 | | 947 262 1128 | (947 262 0528) | 1 | ŞANZIMAN KM DEVİR SACI | PULSE STAR | | | ♦ | ♦ | ♦ | ♦ | ♦ | ♦ | ♦ |
| 98 | K21.03515 | 015 997 7746 | (015 997 9546) | 1 | ŞANZIMAN FLANŞ KEÇESİ | OIL SEAL | 86X100X14/18mm | | ♦ | ♦ | ♦ | ♦ | ♦ | ♦ | ♦ |
| | | | (013 997 6546) | | | | | | | | | | | | |
| 99 | K21.03309 | 947 262 1645 | | 1 | ŞANZIMAN FLANŞI | COMPANION FLANGE | 4-H, Ø180mm | (2) | ♦ | ♦ | ♦ | ♦ | ♦ | ♦ | ♦ |
| 99 | K21.03308 | 947 262 1745 | | 1 | ŞANZIMAN FLANŞI | COMPANION FLANGE | 4-H, Ø180mm RETARDER | (2) | ♦ | ♦ | | | | ♦ | |
| 99 | K21.07024 | 947 262 2045 | | 1 | ŞANZIMAN FLANŞI | COMPANION FLANGE | 4-H, Ø180mm | (1) | | | ♦ | | ♦ | | |
| 100 | | 013 997 2145 | | 1 | ŞANZIMAN FLANŞ ORİNGİ | O-RING | 62,4X5,3mm | | ♦ | ♦ | ♦ | ♦ | ♦ | ♦ | ♦ |
| 101 | K21.06976 | 947 262 0862 | | 1 | ŞANZIMAN FLANŞI ALIN PULU | THRUST WASHER | 87X20mm | (1) | | | ♦ | | ♦ | ♦ | |
| 101 | K21.04214 | 945 262 0762 | | 1 | ŞANZIMAN FLANŞI ALIN PULU | THRUST WASHER | 93X20mm | (2) | ♦ | ♦ | ♦ | ♦ | ♦ | ♦ | ♦ |
| 102 | K21.06280 | 000000 006750 | (000000 005728) | 1 | ŞANZIMAN HEYKELİ ALIN VİDASI | SCREW | M20X1,5X80mm | | ♦ | ♦ | ♦ | ♦ | ♦ | ♦ | ♦ |

NOTES :
Parts encoded alphabetic and numaric are used together.

GEARBOX TYPE:
715350 - 715351 - 715358 - G211-12 KL /14,93 - 1,00
715352 - 715354 -715356 - 715359 - G211-12 KL /14,93 - 1,00

NOTLAR :
Alfabetik ve rakam ile kodlanan parçalar birlikte kullanılır.

ŞANZIMAN TİPLERİ:
715350 - 715351 - 715358 - G211-12 KL /14,93 - 1,00
715352 - 715354 -715356 - 715359 - G211-12 KL /14,93 - 1,00





Original parts names, oem numbers, symbols and descriptions used in this catalogue are for reference purposes only.

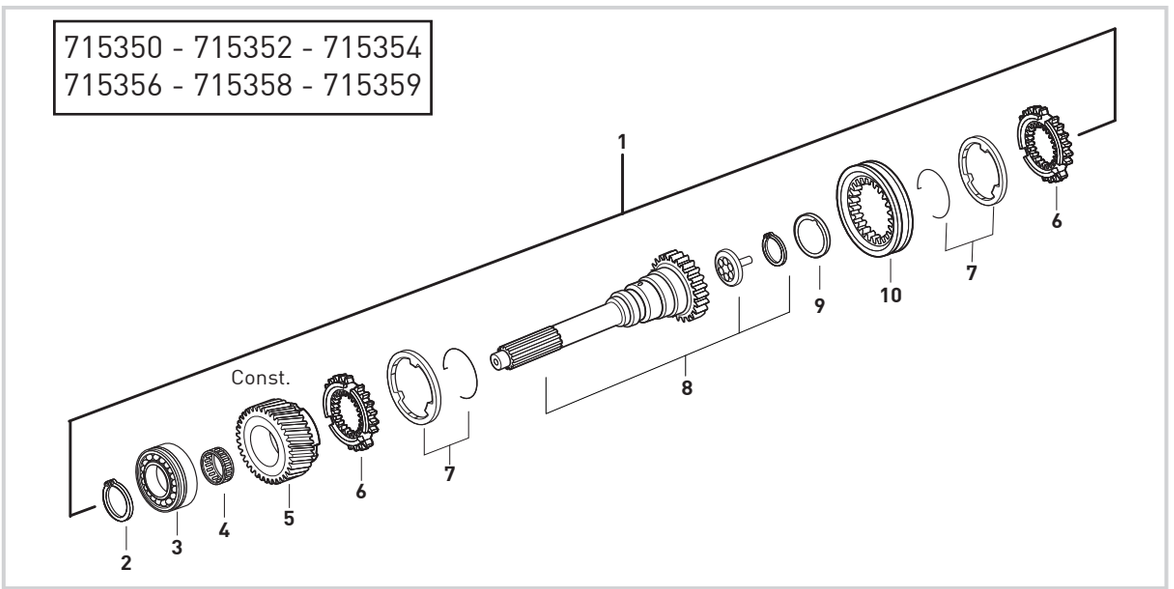


| Fig. | Kacmaz No. | Oem No | Oem Old No | Pcs. | Ürün Tanımı | Description | Sizes |
|---|---|---|---|---|---|---|---|
| 1 | K21.03570 | | | Kit | PRİZDİREK KOMPLE | INPUT SHAFT COMPLETE | |
| 2 | K21.04346 | 387 262 8773 | | 1 | PRİZDİREK ÖN BİLYA SEKMANI | RETAINING RING | 3,20mm |
| 3 | K21.03618 | 011 981 1305 | (014 981 9005) | 1 | PRİZDİREK ÖN BİLYA | ROLLER BEARING | 75X140X34,25mm |
| 4 | K21.03826 | 022 981 2110 | (022 981 2010) | 1 | TAKVİYE MASURA BİLYA | NEEDLE CAGE | 84X90X48mm |
| 5 | K21.03269 | 947 262 1117 | (947 262 5210) | 1 | TAKVİYE DİŞLİSİ 29 DİŞ | CONSTANT GEAR 29 T. | |
| | | | (948 262 1810) | | | | |
| | | | (948 262 3210) | | | | |
| | | | (947 262 2310) | | | | |
| 6 | K21.03147 | 945 262 7734 | (945 262 3634) | 2 | TAKVİYE SENKROMENÇ | ENGAGING RING | |
| 7 | K21.03136 | 945 260 2245 | (946 262 6337) | 2 | TAKVİYE FRENLEME (Mo) | SYNCHRONIZING CONE / Mo | |
| 8 | K21.03275 | 947 262 5602 | (947 262 3902) | 1 | PRİZDİREK 60 DİŞ | INPUT SHAFT 60 T. | |
| | | | (947 262 5002) | | | | |
| | | | (948 262 0902) | | | | |
| | | | (948 262 0702) | | | | |
| 9 | K21.03513 | 001 262 0262 | (000 262 8662) | 1 | PRİZDİREK ARKA KEÇE | OIL SEAL | 73,5X101X7mm |
| 10 | K21.03137 | 945 262 6823 | (945 262 6423) | 1 | TAKVİYE SENKROMENÇ HALKA | ENGAGING SLEEVE | |



**Original parts names, oem numbers, symbols and descriptions used in this catalogue are for reference purposes only.**

715350 - 715351 - 715358

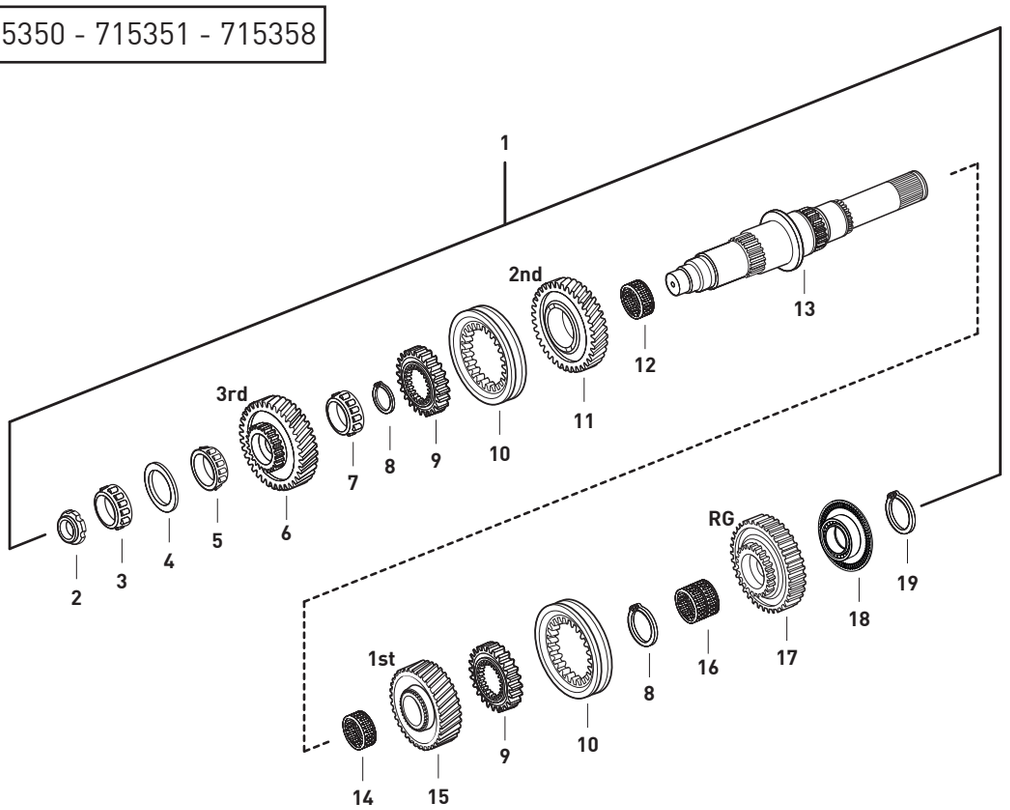


| Fig. | Kacmaz No. | Oem No | Oem Old No | Pcs. | Ürün Tanımı | Description | Sizes |
|---|---|---|---|---|---|---|---|
| 1 | K21.06367 | | | Kit | KAMALI MİL KOMPLE | MAIN SHAFT COMPLETE | |
| 2 | K21.03432 | 945 990 0250 | (945 990 0150) | 1 | KAMALI MİL SOMUNU | NUT | M30X1,5 |
| 3 | K21.03632 | 020 981 5205 | (017 981 1305) | 1 | KAMALI MİL UÇ BİLYA | ROLLER BEARING | 39,69X40,39mm |
| 4 | K21.04095 | 389 262 2155 | | 1 | KAMALI MİL AYAR PULU | THRUST WASHER | 1,73mm |
| 5 | K21.03629 | 015 981 7605 | (015 981 2005) | 1 | 3.VİTES DİŞLİ ÖN BİLYA | ROLLER BEARING | 50X41mm |
| 6 | K21.03465 | 947 262 1517 | (947 262 0117) | 1 | 3.VİTES DİŞLİSİ 34 DİŞ | GEAR 3rd 34 T. | |
| 7 | K21.03636 | 017 981 8305 | | 1 | 3.VİTES DİŞLİSİ ARKA BİLYA | ROLLER BEARING | 52X24mm |
| 8 | K21.04337 | 387 262 0873 | | 2 | 2./3.-GERİ VİT.YILDIZ DİŞLİ SEK. | RETAINING RING | 2,60mm |
| 9 | K21.03280 | 947 262 2635 | (947 262 1435) | 2 | 1./2./3.-GERİ VİTES YILDIZ DİŞLİ | SYNCHRONIZER HUB | |
| 10 | K21.03282 | 947 262 2223 | (947 262 1423) | 2 | 1./2./3.-GERİ VİTES HALKA | ENGAGING SLEEVE | |
| | | | (947 262 1123) | | | | |
| 11 | K21.03466 | 947 262 2712 | (947 262 2412) | 1 | 2.VİTES DİŞLİSİ 38 DİŞ | GEAR 2nd 38 T. | |
| 12 | K21.03817 | 019 981 4410 | (007 981 4210) | 1 | 2.VİTES MASURA BİLYA | NEEDLE CAGE | 75X83X55mm |
| 13 | K21.03467 | 947 262 2505 | (947 262 1705) | 1 | KAMALI MİL | MAIN SHAFT | |
| | | | (947 262 2305) | | | | |
| 14 | K21.03827 | 013 981 1210 | (006 981 6410) | 2 | 1.VİTES MASURA BİLYA | NEEDLE CAGE | 75X83X33mm |
| 15 | K21.03468 | 947 262 5310 | (947 262 5110) | 1 | 1.VİTES DİŞLİSİ 41 DİŞ | GEAR 1st 41 T. | |
| 16 | K21.03828 | 022 981 2310 | (022 981 2210) | 1 | GERİ VİTES MASURA BİLYA | NEEDLE CAGE | 64X72X44,6mm |
| 17 | K21.03470 | 947 262 1933 | (947 262 2533) | 1 | GERİ VİTES DİŞLİSİ 41 DİŞ | REVERSE GEAR 41 T. | |
| 18 | K21.03857 | 002 980 9502 | | 1 | KAMALI MİL ARKA BİLYA | ROLLER BEARING | 55X110X40mm |
| 19 | K21.04331 | 007 994 1841 | (006 994 9941) | 1 | KAMALI MİL ARKA BİLYA SEKMANI | RETAINING RING | 2,50mm |



Original parts names, oem numbers, symbols and descriptions used in this catalogue are for reference purposes only.

715352 - 715354 - 715356 - 715359

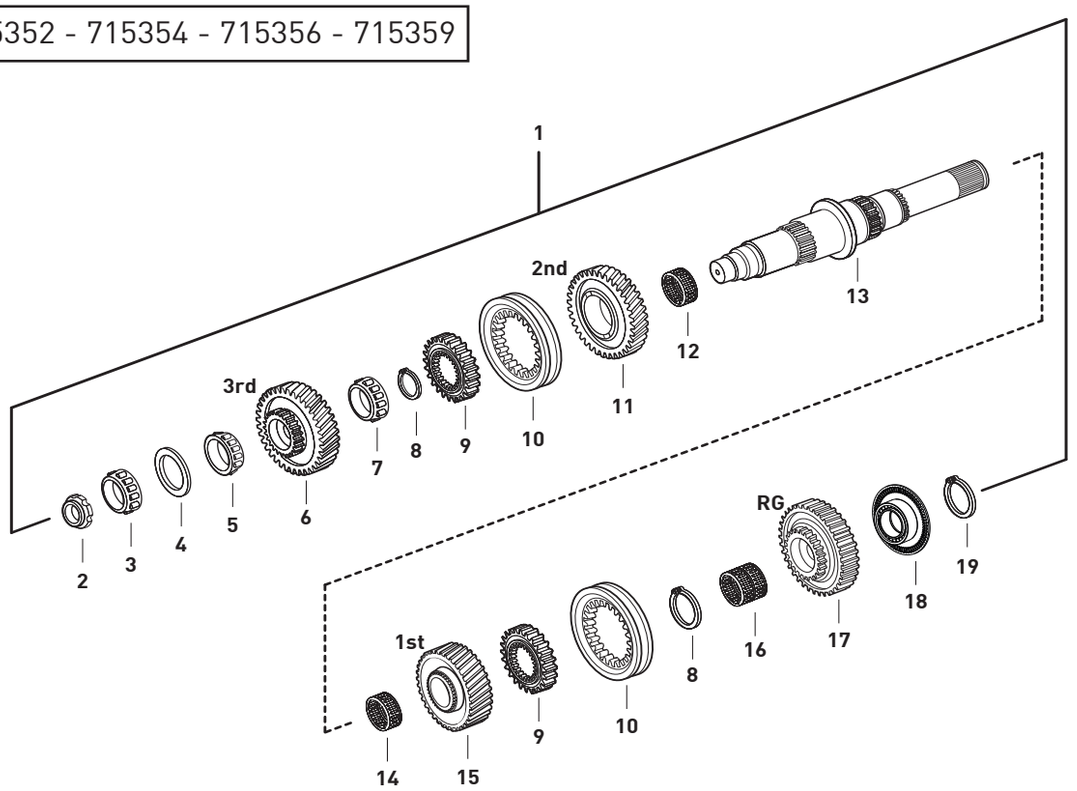


| Fig. | Kacmaz No. | Oem No | Oem Old No | Pcs. | Ürün Tanımı | Description | Sizes |
|---|---|---|---|---|---|---|---|
| 1 | K21.06668 | | | Kit | KAMALI MİL KOMPLE | MAIN SHAFT COMPLETE | |
| 2 | K21.03432 | 945 990 0250 | (945 990 0150) | 1 | KAMALI MİL SOMUNU | NUT | M30X1,5 |
| 3 | K21.03632 | 020 981 5205 | (017 981 1305) | 1 | KAMALI MİL UÇ BİLYA | ROLLER BEARING | 39,69X40,39mm |
| 4 | K21.04025 | 389 262 3252 | | 1 | KAMALI MİL AYAR PULU | THRUST WASHER | 2,00mm |
| 5 | K21.03629 | 015 981 7605 | (015 981 2005) | 1 | 3.VİTES DİŞLİ ÖN BİLYA | ROLLER BEARING | 50X41mm |
| 6 | K21.03465 | 947 262 1517 | (947 262 0117) | 1 | 3.VİTES DİŞLİSİ 34 DİŞ | GEAR 3rd 34 T. | |
| 7 | K21.03636 | 017 981 8305 | | 1 | 3.VİTES DİŞLİSİ ARKA BİLYA | ROLLER BEARING | 52X24mm |
| 8 | K21.06669 | 387 262 7673 | | 2 | 2./3.-GERİ VİT.YILDIZ DİŞLİ SEK. | RETAINING RING | 2,70mm |
| 9 | K21.03280 | 947 262 2635 | (947 262 1435) | 2 | 1./2./3.-GERİ VİTES YILDIZ DİŞLİ | SYNCHRONIZER HUB | |
| 10 | K21.03282 | 947 262 2223 | (947 262 1423) | 2 | 1./2./3.-GERİ VİTES HALKA | ENGAGING SLEEVE | |
| | | | (947 262 1123) | | | | |
| 11 | K21.03466 | 947 262 2712 | (947 262 2412) | 1 | 2.VİTES DİŞLİSİ 38 DİŞ | GEAR 2nd 38 T. | |
| 12 | K21.03817 | 019 981 4410 | (007 981 4210) | 1 | 2.VİTES MASURA BİLYA | NEEDLE CAGE | 75X83X55mm |
| 13 | K21.03467 | 947 262 2505 | (947 262 1705) | 1 | KAMALI MİL | MAIN SHAFT | |
| | | | (947 262 2305) | | | | |
| 14 | K21.03827 | 013 981 1210 | (006 981 6410) | 2 | 1.VİTES MASURA BİLYA | NEEDLE CAGE | 75X83X33mm |
| 15 | K21.03468 | 947 262 5310 | (947 262 5110) | 1 | 1.VİTES DİŞLİSİ 41 DİŞ | GEAR 1st 41 T. | |
| 16 | K21.03828 | 022 981 2310 | (022 981 2210) | 1 | GERİ VİTES MASURA BİLYA | NEEDLE CAGE | 64X72X44,6mm |
| 17 | K21.03470 | 947 262 1933 | (947 262 2533) | 1 | GERİ VİTES DİŞLİSİ 41 DİŞ | REVERSE GEAR 41 T. | |
| 18 | K21.03860 | 003 980 0602 | | 1 | KAMALI MİL ARKA BİLYA | ROLLER BEARING | 55X130X51mm |
| 19 | K21.06670 | 000471 048000 | | 1 | KAMALI MİL ARKA BİLYA SEKMANI | RETAINING RING | 1,75mm |



**Original parts names, oem numbers, symbols and descriptions used in this catalogue are for reference purposes only.**

715350 - 715351 - 715358

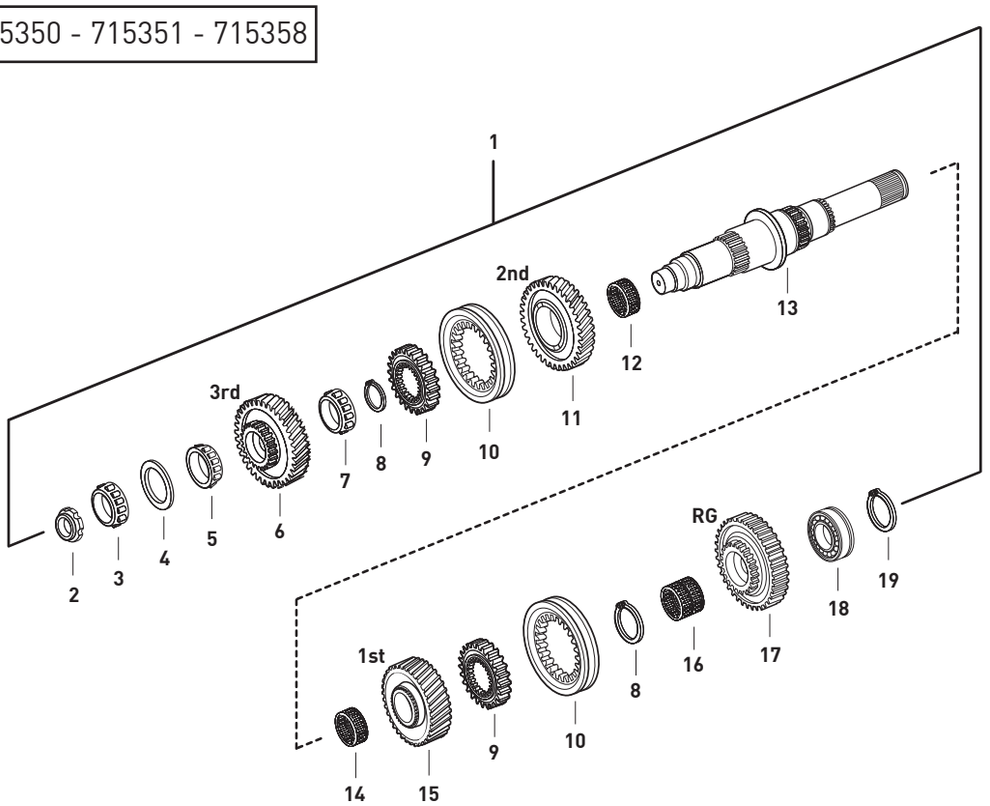


| Fig. | Kacmaz No. | Oem No | Oem Old No | Pcs. | Ürün Tanımı | Description | Sizes |
|---|---|---|---|---|---|---|---|
| 1 | K21.06375 | | | Kit | KAMALI MİL KOMPLE | MAIN SHAFT COMPLETE | |
| 2 | K21.03432 | 945 990 0250 | (945 990 0150) | 1 | KAMALI MİL SOMUNU | NUT | M30X1,5 |
| 3 | K21.03632 | 020 981 5205 | (017 981 1305) | 1 | KAMALI MİL UÇ BİLYA | ROLLER BEARING | 39,69X40,39mm |
| 4 | K21.04025 | 389 262 3252 | | 1 | KAMALI MİL AYAR PULU | THRUST WASHER | 2,00mm |
| 5 | K21.03629 | 015 981 7605 | (015 981 2005) | 1 | 3.VİTES DİŞLİ ÖN BİLYA | ROLLER BEARING | 50X41mm |
| 6 | K21.03465 | 947 262 1517 | (947 262 0117) | 1 | 3.VİTES DİŞLİSİ 34 DİŞ | GEAR 3rd 34 T. | |
| 7 | K21.03636 | 017 981 8305 | | 1 | 3.VİTES DİŞLİSİ ARKA BİLYA | ROLLER BEARING | 52X24mm |
| 8 | K21.04337 | 387 262 0873 | | 2 | 2./3.-GERİ VİT.YILDIZ DİŞLİ SEK. | RETAINING RING | 2,60mm |
| 9 | K21.03280 | 947 262 2635 | (947 262 1435) | 2 | 1./2./ 3.-GERİ VİTES YILDIZ DİŞLİ | SYNCHRONIZER HUB | |
| 10 | K21.03282 | 947 262 2223 | (947 262 1423) | 2 | 1./2./3.-GERİ VİTES HALKA | ENGAGING SLEEVE | |
| | | | (947 262 1123) | | | | |
| 11 | K21.03466 | 947 262 2712 | (947 262 2412) | 1 | 2.VİTES DİŞLİSİ 38 DİŞ | GEAR 2nd 38 T. | |
| 12 | K21.03817 | 019 981 4410 | (007 981 4210) | 1 | 2.VİTES MASURA BİLYA | NEEDLE CAGE | 75X83X55mm |
| 13 | K21.03467 | 947 262 2505 | (947 262 1705) | 1 | KAMALI MİL | MAIN SHAFT | |
| | | | (947 262 2305) | | | | |
| 14 | K21.03827 | 013 981 1210 | (006 981 6410) | 2 | 1.VİTES MASURA BİLYA | NEEDLE CAGE | 75X83X33mm |
| 15 | K21.03468 | 947 262 5310 | (947 262 5110) | 1 | 1.VİTES DİŞLİSİ 41 DİŞ | GEAR 1st 41 T. | |
| 16 | K21.03828 | 022 981 2310 | (022 981 2210) | 1 | GERİ VİTES MASURA BİLYA | NEEDLE CAGE | 64X72X44,6mm |
| 17 | K21.03470 | 947 262 1933 | (947 262 2533) | 1 | GERİ VİTES DİŞLİSİ 41 DİŞ | REVERSE GEAR 41 T. | |
| 18 | K21.03856 | 018 981 5705 | | 1 | KAMALI MİL ARKA BİLYA | ROLLER BEARING | 55X110X40mm |
| 19 | K21.06670 | 000471 048000 | | 1 | KAMALI MİL ARKA BİLYA SEKMANI | RETAINING RING | 1,75mm |



Original parts names, oem numbers, symbols and descriptions used in this catalogue are for reference purposes only.

715350 - 715351 - 715352
715354 - 715356 - 715358
715359

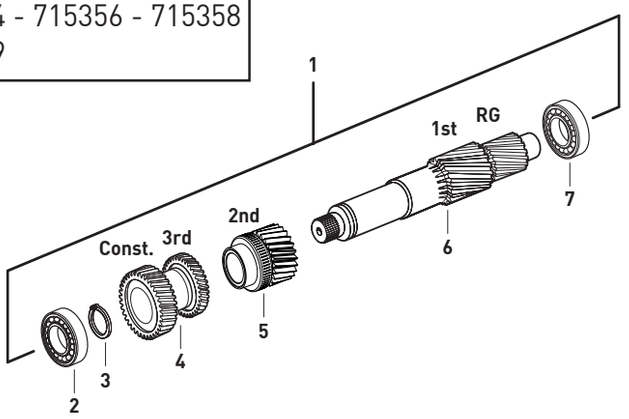


| Fig. | Kacmaz No. | Oem No | Oem Old No | Pcs. | Ürün Tanımı | Description |
|---|---|---|---|---|---|---|
| 1 | K21.03594 | 947 260 4424 | (947 260 2624) | kit | GRUP MİLİ KOMPLE (Sensörlü) | COUNTER SHAFT COMPLETE (With Sensor) |
| | | | (947 260 3124) | | | |
| 2 | K21.03606 | 015 981 9005 | (014 981 1405) | 1 | GRUP MİLİ ÖN BİLYA | ROLLER BEARING 50,8X100X35mm |
| 3 | K21.06426 | 900055 060300 | (000 264 5351) | 1 | GRUP MİLİ ÖN BİLYA SEKMANI | RETAINING RING 3,00mm |
| 4 | K21.03297 | 947 263 2910 | | 1 | TAKVİYE VE 3.VİTES DİŞLİ KARŞ. 33/36 DİŞ | DOUBLE GEAR Const./3rd 33/36 T. |
| 5 | K21.06393 | 947 260 3519 | | 1 | 2.VİT.DİŞLİ KARŞILIĞI 23 DİŞ (Devir Sensörlü) | GEAR 2nd 23 T. (With Speed Sensor) |
| 6 | K21.03302 | 947 263 2402 | | 1 | GRUP MİLİ 15/15/18/16 DİŞ | COUNTER SHAFT 15/15/18/16 T. |
| 7 | K21.03665 | 019 981 6105 | (002 981 7781) | 1 | GRUP MİLİ ARKA BİLYA | ROLLER BEARING 60X110X34mm |

715350 - 715351 - 715358

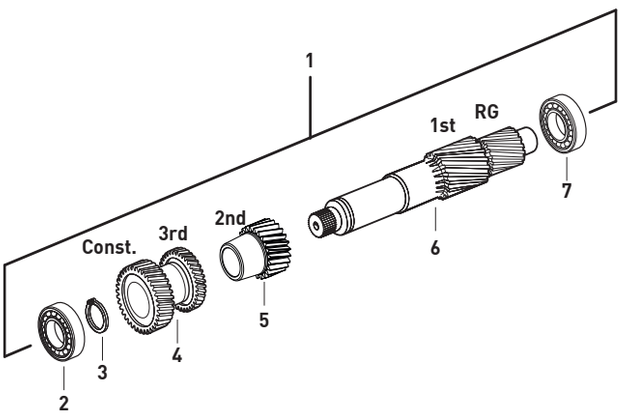


| Fig. | Kacmaz No. | Oem No | Oem Old No | Pcs. | Ürün Tanımı | Description |
|---|---|---|---|---|---|---|
| 1 | K21.06421 | | | Kit | GRUP MİLİ KOMPLE (Devir Sensörsüz) | COUNT.SHAFT COMP. (W/Out Speed Sensor) |
| 2 | K21.03606 | 015 981 9005 | (014 981 1405) | 1 | GRUP MİLİ ÖN BİLYA | ROLLER BEARING 50,8X100X35mm |
| 3 | K21.06426 | 900055 060300 | (000 264 5351) | 1 | GRUP MİLİ ÖN BİLYA SEKMANI | RETAINING RING 3,00mm |
| 4 | K21.03297 | 947 263 2910 | | 1 | TAKVİYE VE 3.VİTES DİŞLİ KARŞ. 33/36 DİŞ | DOUBLE GEAR Const./3rd 33/36 T. |
| 5 | K21.03298 | 947 263 0512 | (947 263 0312) | 1 | 2.VİT.DİŞLİ KARŞILIĞI 23 DİŞ (Devir Sensörsüz) | GEAR 2nd 23 T. (W/Out Speed Sensor) |
| | | | (947 263 0212) | | | |
| | | | (947 263 0112) | | | |
| 6 | K21.03302 | 947 263 2402 | | 1 | GRUP MİLİ 15/15/18/16 DİŞ | COUNTER SHAFT 15/15/18/16 T. |
| 7 | K21.03665 | 019 981 6105 | (002 981 7781) | 1 | GRUP MİLİ ARKA BİLYA | ROLLER BEARING 60X110X34mm |



**Original parts names, oem numbers, symbols and descriptions used in this catalogue are for reference purposes only.**

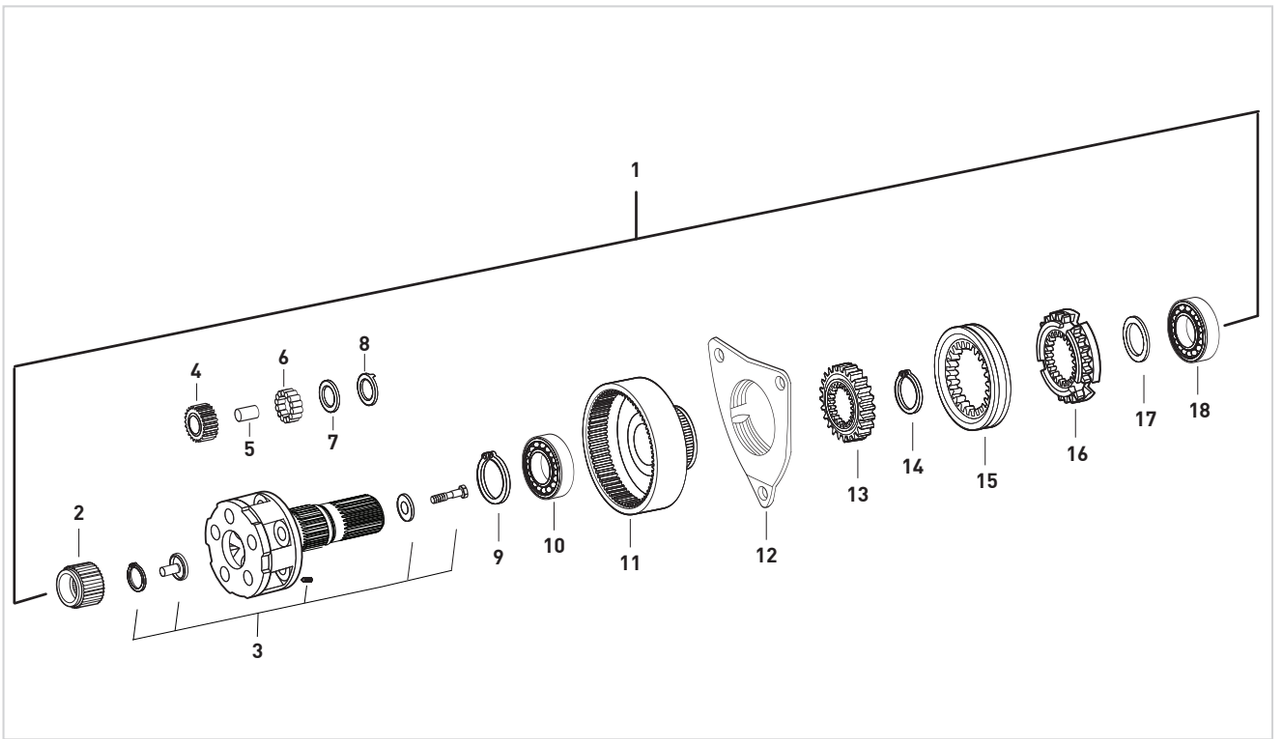


| Fig. | Kacmaz No. | Oem No | Oem Old No | Pcs. | Ürün Tanımı | Description | Sizes |
|---|---|---|---|---|---|---|---|
| 1 | K21.06707 | | | Kit | ŞANZIMAN HEYKELİ KOMPLE | PLANETARY CARRIER COMPLETE | |
| 2 | K21.03294 | 947 262 1209 | | 1 | GÜNEŞ DİŞLİ 25 DİŞ | SUN GEAR 25 T. | |
| 3 | K21.06905 | 947 260 9661 | (947 260 9561) | 1 | ŞANZIMAN HEYKELİ BOŞ | PLANETARY CARRIER EMPTY | |
| 4 | K21.06974 | | | 5 | HEYKEL KOZA DİŞLİSİ 28 DİŞ | PLANETARY GEAR 28 T. | |
| 5 | K21.06349 | | | 5 | HEYKEL KOZA DİŞLİ PİMİ | PLANETARY PIN | |
| 6 | K21.03816 | 000 981 4186 | (000 981 4386) | 125 | HEYKEL KOZA DİŞLİ TANE BİLYA | NEEDLE ROLLER | D5X39,6 |
| 7 | K21.04074 | 389 262 0162 | (389 262 6462) | 10 | HEYKEL KOZA DİŞLİ PULU | THRUST WASHER | |
| 8 | K21.04075 | 945 262 1162 | (945 262 0162) | 10 | HEYKEL KOZA DİŞLİ PULU | THRUST WASHER | |
| 9 | K21.06864 | 000472 130000 | | 1 | ÇEMBER DİŞLİ BİLYA SEKMANI | RETAINING RING | 130X4mm |
| 10 | K21.03614 | 008 981 1325 | (004 981 8725) | 1 | ÇEMBER DİŞLİ BİLYASI | ROLLER BEARING | 90X130X14mm |
| 11 | K21.03471 | 947 262 2808 | (947 262 2508) | 1 | ÇEMBER DİŞLİ 85 DİŞ | CROWN GEAR 85 T. | |
| 12 | K21.06593 | 960 260 2236 | | 1 | TABLA SENKROMENÇ | FOLLOWER RING | |
| 13 | K21.03079 | 389 262 4935 | (389 262 2035) | 1 | AĞIR SERİ YILDIZ DİŞLİ | SYNCHRONIZER HUB | |
| 14 | K21.04356 | 000471 120000 | | 1 | AĞIR SERİ YILDIZ DİŞLİ SEKMANI | RETAINING RING | |
| 15 | K21.06594 | 960 262 1323 | | 1 | AĞIR SERİ HALKA | ENGAGING SLEEVE | |
| 16 | K21.06535 | 960 262 2734 | | 1 | SERİ SENKROMENÇ | ENGAGING RING | |
| 17 | K21.04136 | 947 262 4052 | | 1 | ŞANZIMAN KM DEVİR SAC PULU | SPACER WASHER | |
| 18 | K21.03639 | 009 981 3325 | (009 981 3425) | 1 | ŞANZIMAN ARKA BİLYA | ROLLER BEARING | 72X130X25mm |





Original parts names, oem numbers, symbols and descriptions used in this catalogue are for reference purposes only.

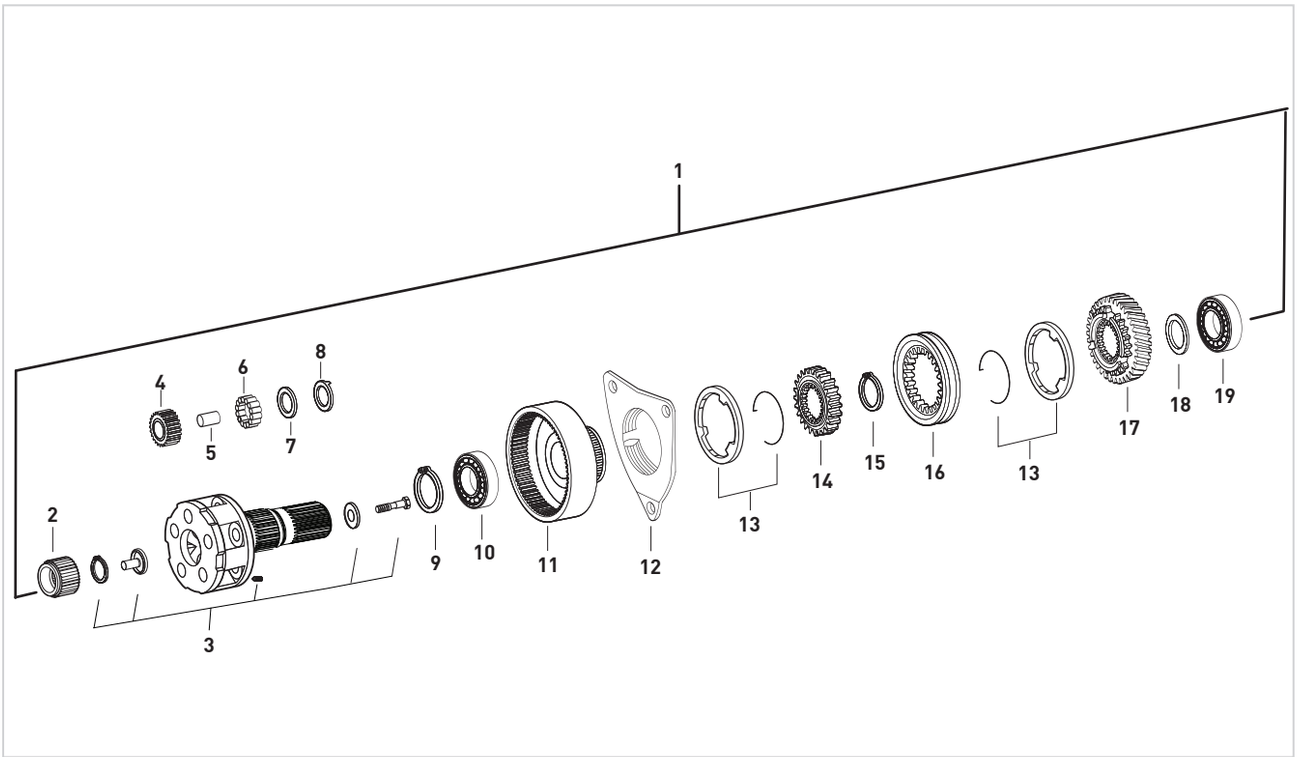


| Fig. | Kacmaz No. | Oem No | Oem Old No | Pcs. | Ürün Tanımı | Description | Sizes |
|---|---|---|---|---|---|---|---|
| 1 | K21.06391 | | | Kit | ŞANZIMAN HEYKELİ KOMPLE | PLANETARY CARRIER COMPLETE | |
| 2 | K21.06306 | 947 262 1609 | | 1 | GÜNEŞ DİŞLİ 25 DİŞ | SUN GEAR 25 T. | |
| 3 | K21.03304 | 947 260 6361 | | 1 | ŞANZIMAN HEYKELİ (BOŞ) | PLANETARY CARRIER (EMPTY) | |
| 4 | K21.06350 | | | 5 | HEYKEL KOZA DİŞLİSİ | PLANETARY GEAR | |
| 5 | K21.06349 | | | 5 | HEYKEL KOZA DİŞLİ PİMİ | PLANETARY PIN | |
| 6 | K21.03821 | | | 125 | HEYKEL KOZA DİŞLİ TANE BİLYA | NEEDLE ROLLER | D5X42,65 |
| 7 | K21.04074 | 389 262 0162 | (389 262 6462) | 10 | HEYKEL KOZA DİŞLİ PULU | THRUST WASHER | |
| 8 | K21.04075 | 945 262 1162 | (945 262 0162) | 10 | HEYKEL KOZA DİŞLİ PULU | THRUST WASHER | |
| 9 | K21.06864 | 000472 130000 | | 1 | ÇEMBER DİŞLİ BİLYA SEKMANI | RETAINING RING | 130X4mm |
| 10 | K21.03614 | 008 981 1325 | (004 981 8725) | 1 | ÇEMBER DİŞLİ BİLYASI | ROLLER BEARING | 90X130X14mm |
| 11 | K21.03471 | 947 262 2808 | (947 262 2508) | 1 | ÇEMBER DİŞLİ 85 DİŞ | CROWN GEAR 85 T. | |
| 12 | K21.03305 | 947 260 0736 | | 1 | TABLA SENKROMENÇ | FOLLOWER RING | |
| 13 | K21.03185 | 947 260 0945 | | 2 | AĞIR SERİ FRENLEME (Mo) | SYNCHRONIZING CONE / Mo | |
| 14 | K21.03079 | 389 262 4935 | (389 262 2035) | 1 | AĞIR SERİ YILDIZ DİŞLİ | GUIDE SLEEVE | |
| 15 | K21.04356 | 000471 120000 | | 1 | AĞIR SERİ YILDIZ DİŞLİ SEKMANI | RETAINING RING | |
| 16 | K21.03033 | 945 262 6923 | (930 262 0623) | 1 | AĞIR SERİ HALKA | ENGAGING SLEEVE | |
| 17 | K21.03307 | 947 264 0420 | | 1 | RETARDER DİŞLİSİ 59 DİŞ | RETARDER GEAR 59 T. | |
| 18 | K21.04136 | 947 262 4052 | | 1 | ŞANZIMAN KM DEVİR SAC PULU | SPACER WASHER | |
| 19 | K21.03639 | 009 981 3325 | (009 981 3425) | 1 | ŞANZIMAN ARKA BİLYA | ROLLER BEARING | 72X130X25mm |





**Original parts names, oem numbers, symbols and descriptions used in this catalogue are for reference purposes only.**

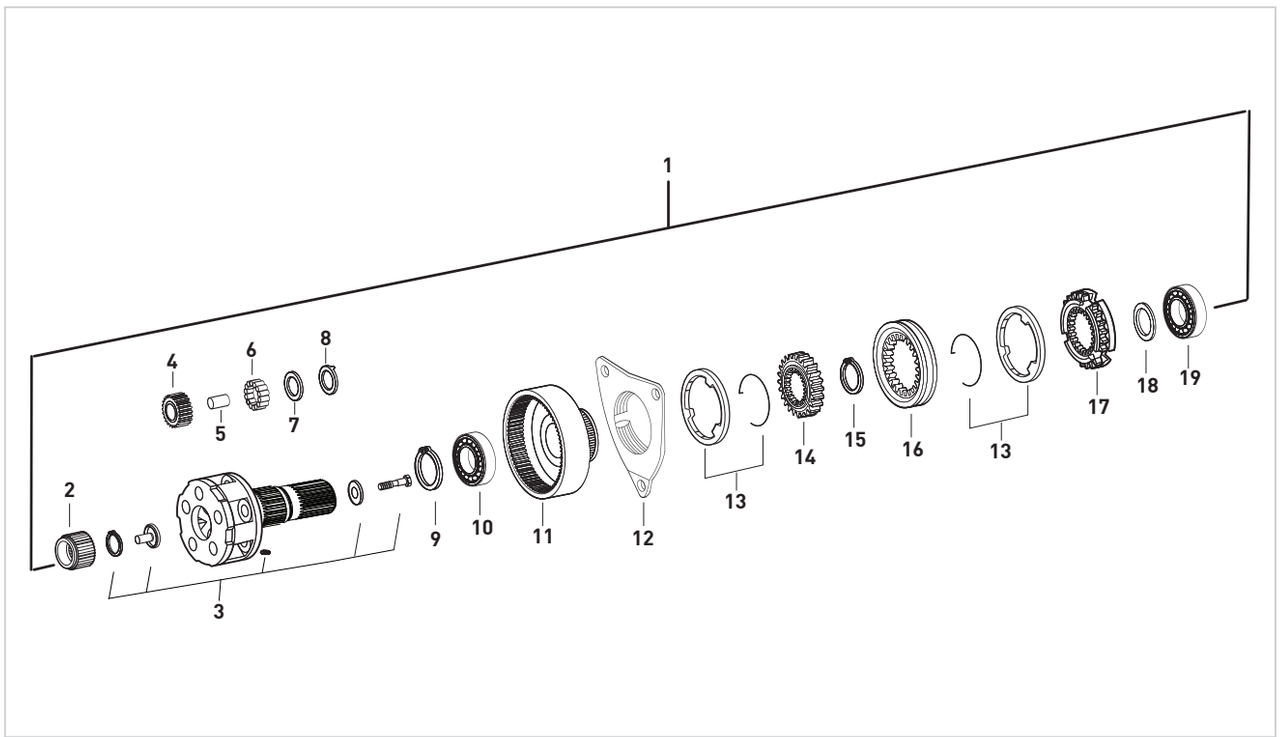


| Fig. | Kacmaz No. | Oem No | Oem Old No | Pcs. | Ürün Tanımı | Description | Sizes |
|---|---|---|---|---|---|---|---|
| 1 | K21.03569 | | | Kit | ŞANZIMAN HEYKELİ KOMPLE | PLANETARY CARRIER COMPLETE | |
| 2 | K21.06306 | 947 262 1609 | | 1 | GÜNEŞ DİŞLİ 25 DİŞ | SUN GEAR 25 T. | |
| 3 | K21.03304 | 947 260 6361 | | 1 | ŞANZIMAN HEYKELİ (BOŞ) | PLANETARY CARRIER (EMPTY) | |
| 4 | K21.06350 | | | 5 | HEYKEL KOZA DİŞLİSİ | PLANETARY GEAR | |
| 5 | K21.06349 | | | 5 | HEYKEL KOZA DİŞLİ PİMİ | PLANETARY PIN | |
| 6 | K21.03821 | | | 125 | HEYKEL KOZA DİŞLİ TANE BİLYA | NEEDLE ROLLER | D5X42,65 |
| 7 | K21.04074 | 389 262 0162 | (389 262 6462) | 10 | HEYKEL KOZA DİŞLİ PULU | THRUST WASHER | |
| 8 | K21.04075 | 945 262 1162 | (945 262 0162) | 10 | HEYKEL KOZA DİŞLİ PULU | THRUST WASHER | |
| 9 | K21.06864 | 000472 130000 | | 1 | ÇEMBER DİŞLİ BİLYA SEKMANI | RETAINING RING | 130X4mm |
| 10 | K21.03614 | 008 981 1325 | (004 981 8725) | 1 | ÇEMBER DİŞLİ BİLYASI | ROLLER BEARING | 90X130X14mm |
| 11 | K21.03471 | 947 262 2808 | (947 262 2508) | 1 | ÇEMBER DİŞLİ 85 DİŞ | CROWN GEAR 85 T. | |
| 12 | K21.03305 | 947 260 0736 | | 1 | TABLA SENKROMENÇ | FOLLOWER RING | |
| 13 | K21.03185 | 947 260 0945 | | 2 | AĞIR SERİ FRENLEME (Mo) | SYNCHRONIZING CONE / Mo | |
| 14 | K21.03079 | 389 262 4935 | (389 262 2035) | 1 | AĞIR SERİ YILDIZ DİŞLİ | GUIDE SLEEVE | |
| 15 | K21.04356 | 000471 120000 | | 1 | AĞIR SERİ YILDIZ DİŞLİ SEKMANI | RETAINING RING | |
| 16 | K21.03033 | 945 262 6923 | (930 262 0623) | 1 | AĞIR SERİ SENK.HALKA | ENGAGING SLEEVE | |
| 17 | K21.03306 | 947 262 0634 | | 1 | SERİ SENKROMENÇ | ENGAGING RING | |
| 18 | K21.04136 | 947 262 4052 | | 1 | ŞANZIMAN KM DEVİR SAC PULU | SPACER WASHER | |
| 19 | K21.03639 | 009 981 3325 | (009 981 3425) | 1 | ŞANZIMAN ARKA BİLYA | ROLLER BEARING | 72X130X25mm |





Original parts names, oem numbers, symbols and descriptions used in this catalogue are for reference purposes only.

P.T.O. (POWER TAKE OFF)

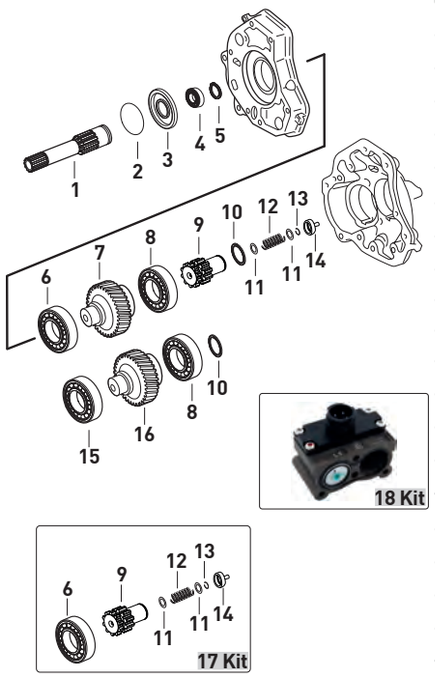


| Fig. | Kacmaz No. | Oem No | Oem Old No | Pcs. | Ürün Tanımı | Description |
|---|---|---|---|---|---|---|
| 1 | K21.03085 | 947 264 0005 | (389 269 0310) | 1 | YAĞ POMPA MİLİ | OIL PUMP SHAFT |
| 1 | K21.03670 | 947 264 0105 | | 1 | YAĞ POMPA MİLİ (RETARDER) | OIL PUMP SHAFT |
| 2 | K21.03511 | 029 997 5748 | | 1 | YAĞ POMPA KAPAK ORİNGİ | O-RING |
| 3 | K21.03558 | 947 264 0287 | | 1 | YAĞ POMPA KAPAĞI | OIL PUMP COVER |
| 4 | K21.03613 | 004 981 9225 | (004 981 8625) | 1 | PTO MİL BİLYASI | ROLLER BEARING |
| 5 | K21.06964 | 000471 045000 | (003 994 3741) | 1 | PTO MİL BİLYA SEKMANI | RETAINING RING |
| 6 | K21.06998 | 017 981 1705 | | 1 | PTO BORU DİŞLİ BİLYASI | ROLLER BEARING |
| 7 | | 947 260 4708 | | 1 | PTO BORU DİŞLİ | GEAR |
| 8 | | 017 981 1805 | | 2 | PTO BORU DİŞLİ BİLYASI | ROLLER BEARING |
| 9 | K21.04334 | 945 264 0006 | | 1 | PTO ARA ADAPTÖR MİLİ | INTERM.SHAFT |
| 10 | | 387 264 3652 | | 2 | BİLYA AYAR RAYNELİ | THRUST WASHER |
| 10 | | 387 264 3752 | | 2 | BİLYA AYAR RAYNELİ | THRUST WASHER |
| 10 | | 387 264 3852 | | 2 | BİLYA AYAR RAYNELİ | THRUST WASHER |
| 11 | | 000988 022010 | | 2 | BİLYA AYAR PULU | THRUST WASHER |
| 12 | K21.04333 | 385 993 5201 | | 1 | YAY | SPRING |
| 13 | | 912009 022100 | | 1 | BİLYA AYAR PUL SEKMANI | RETAINING RING |
| 14 | K21.04332 | 000625 000629 | | 1 | PTO MIL ŞAPKASI | PTO SHAFT CAP |
| 15 | | 016 981 6705 | | 1 | PTO BORU DİŞLİ BİLYASI | ROLLER BEARING |
| 16 | | 947 264 0621 | (947 264 0521) | 1 | PTO BORU DİŞLİ | GEAR |
| 17 | K21.04362 | | | kit | ARA ADAPTÖR MİLİ KOMPLE | INTERM.SHAFT COMP. |
| 18 | K21.06346 | 970 260 0457 | | kit | P.T.O VENTİLİ | VALVE |

P.T.O. (POWER TAKE OFF)

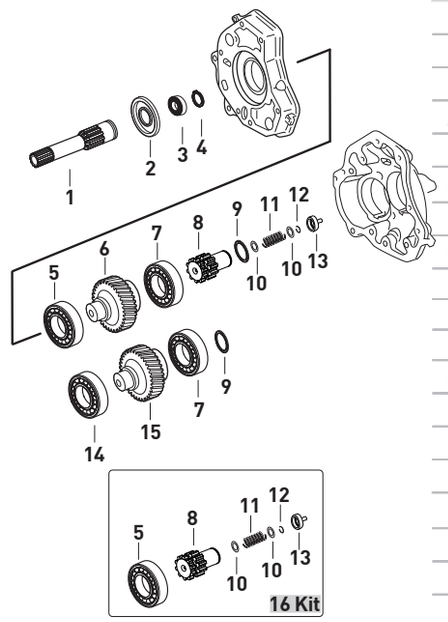


| Fig. | Kacmaz No. | Oem No | Oem Old No | Pcs. | Ürün Tanımı | Description |
|---|---|---|---|---|---|---|
| 1 | K21.06969 | 960 264 0105 | | 1 | PTO MİLİ | INTERM.SHAFT |
| 2 | K21.03558 | 947 264 0287 | | 1 | YAĞ POMPA KAPAĞI | OIL PUMP COVER |
| 3 | K21.03613 | 004 981 9225 | (004 981 8625) | 1 | PTO MİL BİLYASI | ROLLER BEARING |
| 4 | K21.06964 | 000471 045000 | (003 994 3741) | 1 | PTO MİL BİLYA SEKMANI | RETAINING RING |
| 5 | K21.06998 | 017 981 1705 | | 1 | PTO BORU DİŞLİ BİLYASI | ROLLER BEARING |
| 6 | | 947 260 4708 | | 1 | PTO BORU DİŞLİ | GEAR |
| 7 | | 017 981 1805 | | 2 | PTO BORU DİŞLİ BİLYASI | ROLLER BEARING |
| 8 | K21.04334 | 945 264 0006 | | 1 | PTO ARA ADAPTÖR MİLİ | INTERM.SHAFT |
| 9 | | 387 264 3652 | | 2 | BİLYA AYAR RAYNELİ | THRUST WASHER |
| 9 | | 387 264 3752 | | 2 | BİLYA AYAR RAYNELİ | THRUST WASHER |
| 9 | | 387 264 7152 | | 2 | BİLYA AYAR RAYNELİ | THRUST WASHER |
| 9 | | 387 264 4052 | | 2 | BİLYA AYAR RAYNELİ | THRUST WASHER |
| 10 | | 000988 022010 | | 2 | BİLYA AYAR PULU | THRUST WASHER |
| 11 | K21.04333 | 385 993 5201 | | 1 | YAY | SPRING |
| 12 | | 990 990 1700 | | 1 | BİLYA AYAR PUL SEKMANI | RETAINING RING |
| 13 | K21.04332 | 000625 000629 | | 1 | PTO MIL ŞAPKASI | PTO SHAFT CAP |
| 14 | | 990 981 0300 | | 1 | PTO BORU DİŞLİ BİLYASI | ROLLER BEARING |
| 15 | | 947 264 0921 | (947 264 0821) | 1 | PTO BORU DİŞLİ | GEAR |
| 16 | K21.04362 | | | kit | ARA ADAPTÖR MİLİ KOMPLE | INTERM.SHAFT COMP. |





**Original parts names, oem numbers, symbols and descriptions used in this catalogue are for reference purposes only.**

# NOTES / NOTLAR



Original parts names, oem numbers, symbols and descriptions used in this catalogue are for reference purposes only.

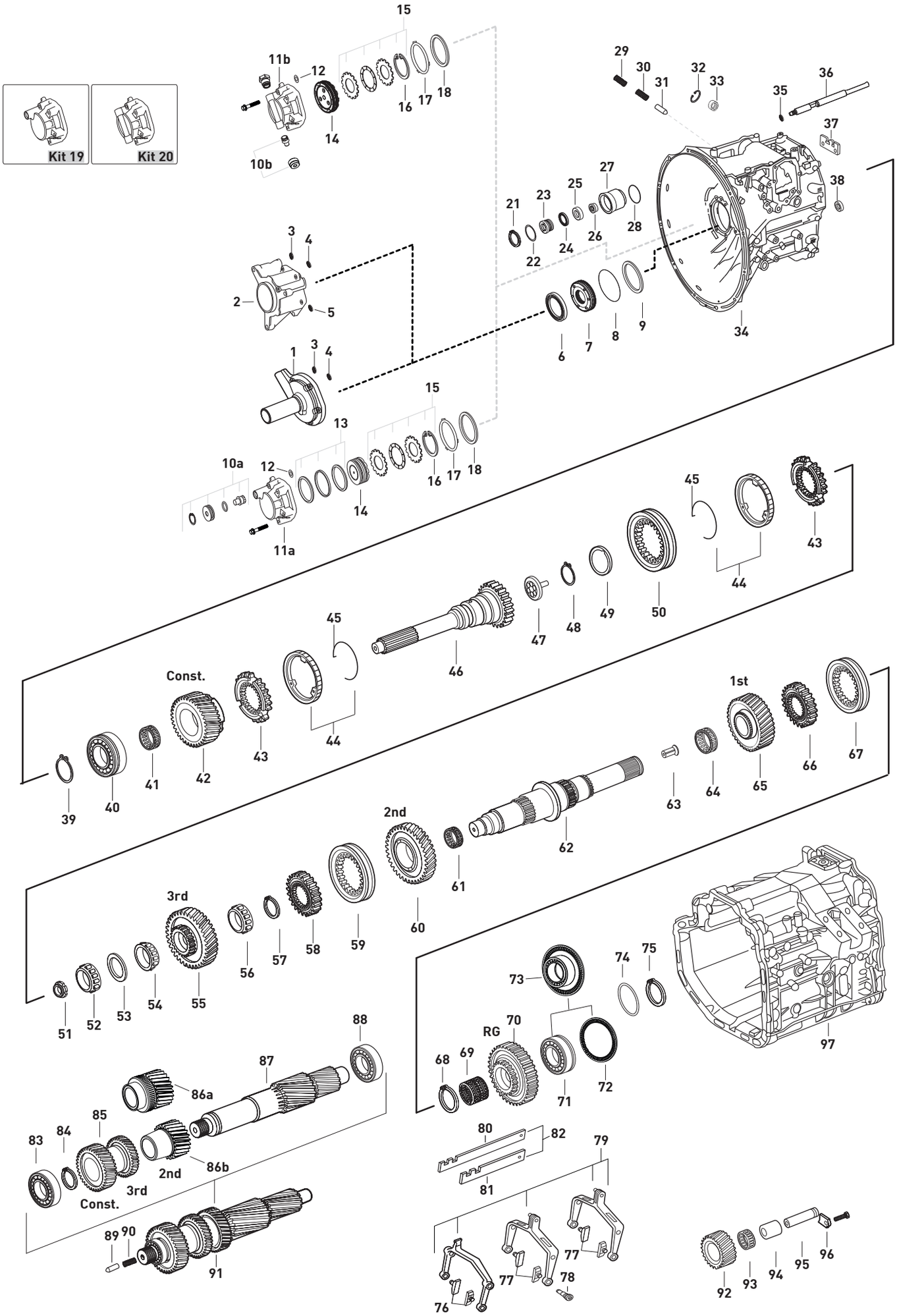






Original parts names, oem numbers, symbols and descriptions used in this catalogue are for reference purposes only.

| Fig. | Kacmaz No | Oem No | Oem Old No | Pcs. | Ürün Tanımı | Description | Sizes | Not | 715360 | 715361 | 715364 | 715366 |
|---|---|---|---|---|---|---|---|---|---|---|---|---|
| 1 | | 947 261 2218 | | 1 | PRİZDİREK KEÇE KAPAĞI | COVER | | | | ♦ | | |
| 2 | | 960 261 0018 | | 1 | PRİZDİREK KEÇE KAPAĞI | COVER | | | ♦ | | ♦ | ♦ |
| 2 | | 960 261 0218 | | 1 | PRİZDİREK KEÇE KAPAĞI | COVER | | | ♦ | | | |
| 3 | K21.06637 | 019 997 8348 | (020 997 7948) | 1 | PRİZDİREK KEÇE KAPAK ORİNGİ | O-RING | 14X4mm | | ♦ | ♦ | ♦ | ♦ |
| 4 | K21.06636 | 015 997 4048 | (020 997 8748) | 1 | PRİZDİREK KEÇE KAPAK ORİNGİ | O-RING | 5X3mm | | ♦ | ♦ | ♦ | ♦ |
| 5 | | 023 997 7748 | | 1 | PRİZDİREK KEÇE KAPAK ORİNGİ | O-RING | 13,1X2mm | | ♦ | | ♦ | ♦ |
| 6 | K21.03509 | 019 997 0547 | (023 997 7847) | 1 | PRİZDİREK KEÇESİ | OIL SEAL | 56X72X8mm | | ♦ | ♦ | ♦ | ♦ |
| | | | (019 997 0647) | | | | | | | | | |
| | | | (022 997 8547) | | | | | | | | | |
| 7 | K21.06038 | 389 261 0665 | (389 261 0765) | 1 | YAĞ TUTUCU DİSK | OIL BAFFLE | 75X16mm | | ♦ | ♦ | ♦ | ♦ |
| | | | (389 261 0865) | | | | | | | | | |
| 8 | K21.06635 | 020 997 7848 | | 1 | PRİZDİREK KEÇE KAPAK ORİNGİ | O-RING | 138X3mm | | ♦ | ♦ | ♦ | ♦ |
| 8 | K21.06712 | 028 997 2248 | (019 997 7248) | 1 | PRİZDİREK KEÇE KAPAK ORİNGİ | O-RING | 140X3mm | | | ♦ | | |
| 9 | K21.04162 | 389 262 4152 | (389 262 0955) | 1 | PRİZDİREK AYAR RAYNELİ | THRUST WASHER | 0,10mm | | ♦ | ♦ | ♦ | ♦ |
| 9 | K21.04243 | 389 262 0855 | | 1 | PRİZDİREK AYAR RAYNELİ | THRUST WASHER | 0,15mm | | ♦ | ♦ | ♦ | ♦ |
| 9 | K21.04151 | 389 262 0755 | | 1 | PRİZDİREK AYAR RAYNELİ | THRUST WASHER | 0,20mm | | ♦ | ♦ | ♦ | ♦ |
| 9 | K21.06715 | 389 262 3055 | | 1 | PRİZDİREK AYAR RAYNELİ | THRUST WASHER | 0,25mm | | ♦ | ♦ | ♦ | ♦ |
| 9 | K21.04221 | 389 262 3255 | | 1 | PRİZDİREK AYAR RAYNELİ | THRUST WASHER | 0,31mm | | ♦ | ♦ | ♦ | ♦ |
| 9 | K21.04163 | 389 262 3555 | (389 262 0655) | 1 | PRİZDİREK AYAR RAYNELİ | THRUST WASHER | 0,40mm | | ♦ | ♦ | ♦ | ♦ |
| | | | (389 262 4452) | | | | | | | | | |
| 9 | K21.04164 | 389 262 3755 | (389 262 1954) | 1 | PRİZDİREK AYAR RAYNELİ | THRUST WASHER | 0,46mm | | ♦ | ♦ | ♦ | ♦ |
| 9 | K21.04246 | 389 262 3855 | | 1 | PRİZDİREK AYAR RAYNELİ | THRUST WASHER | 0,49mm | | ♦ | ♦ | ♦ | ♦ |
| 9 | K21.04250 | 389 262 4055 | (389 262 0155) | 1 | PRİZDİREK AYAR RAYNELİ | THRUST WASHER | 0,55mm | | ♦ | ♦ | ♦ | ♦ |
| | | | (389 262 2154) | | | | | | | | | |
| 9 | K21.04167 | 389 262 4255 | (389 262 2254) | 1 | PRİZDİREK AYAR RAYNELİ | THRUST WASHER | 0,61mm | | ♦ | ♦ | ♦ | ♦ |
| 9 | K21.04168 | 389 262 4355 | (389 262 2354) | 1 | PRİZDİREK AYAR RAYNELİ | THRUST WASHER | 0,64mm | | ♦ | ♦ | ♦ | ♦ |
| 9 | K21.04169 | 389 262 4555 | (389 262 2454) | 1 | PRİZDİREK AYAR RAYNELİ | THRUST WASHER | 0,70mm | | ♦ | ♦ | ♦ | ♦ |
| 9 | K21.04170 | 389 262 4755 | (389 262 2554) | 1 | PRİZDİREK AYAR RAYNELİ | THRUST WASHER | 0,76mm | | ♦ | ♦ | ♦ | ♦ |
| 9 | K21.04281 | 389 262 4855 | (389 262 0555) | 1 | PRİZDİREK AYAR RAYNELİ | THRUST WASHER | 0,79mm | | ♦ | ♦ | ♦ | ♦ |
| 9 | K21.04282 | 389 262 5555 | | 1 | PRİZDİREK AYAR RAYNELİ | THRUST WASHER | 1,00mm | | ♦ | ♦ | ♦ | ♦ |
| 9 | K21.04171 | 389 262 9654 | (389 262 2654) | 1 | PRİZDİREK AYAR RAYNELİ | THRUST WASHER | 2,00mm | | ♦ | ♦ | ♦ | ♦ |
| 10a | K21.06498 | 930 260 0058 | | 1 | HAVALANDIRMA TAMİR TAKIMI | REPAIR KIT | | (A) | ♦ | ♦ | ♦ | ♦ |
| 10b | K21.07027 | 960 260 0058 | | 1 | HAVALANDIRMA TAMİR TAKIMI | REPAIR KIT | | (B) | ♦ | ♦ | ♦ | ♦ |
| 11a | K21.06301 | 960 261 1933 | | 1 | GRUP DURDURUCU KAPAĞI | COVER | | (A) | ♦ | ♦ | ♦ | ♦ |
| 11b | K21.06949 | 960 261 4133 | | 1 | GRUP DURDURUCU KAPAĞI | COVER | | (B) | ♦ | ♦ | ♦ | ♦ |
| 12 | K21.06636 | 015 997 4048 | (020 997 8748) | 1 | GRUP DURDURUCU PİSTON ORİNGİ | O-RING | 5X3mm | | ♦ | ♦ | ♦ | ♦ |
| 13 | K21.06396 | 947 260 0718 | (960 260 3318) | 1 | GRUP DURD.PİSTON TAMİR TAKIMI | REPAIR KIT | | | ♦ | ♦ | ♦ | ♦ |
| 14 | K21.06302 | 960 260 1718 | | 1 | GRUP DURDURUCU KAPAK PİSTONU | PISTON | | (A) | ♦ | ♦ | ♦ | ♦ |
| 14 | K21.06967 | 960 260 3418 | | 1 | GRUP DURDURUCU KAPAK PİSTONU | PISTON | | (B) | ♦ | ♦ | ♦ | ♦ |
| 15 | K21.06431 | 960 262 0291 | (960 262 0191) | 1 | KAVRAMA HALKA SETİ | PARTS KIT | | | ♦ | ♦ | ♦ | ♦ |
| | | | (960 262 0091) | | | | | | | | | |
| | | | (947 260 4036) | | | | | | | | | |
| 16 | K21.06730 | 970 994 3541 | (000472 100000) | 1 | GRUP DURDURUCU KİLİT SEKMANI | RETAINING RING | 3,00mm | | ♦ | ♦ | ♦ | ♦ |
| 17 | K21.06533 | 028 997 2348 | (004 997 2248) | 1 | GRUP DURDURUCU KAPAK ORİNGİ | O-RING | 100X3mm | | ♦ | ♦ | ♦ | ♦ |
| 18 | K21.04192 | 406 337 0252 | | 1 | GRUP MİLİ ÖN BİLYA RAYNELİ | THRUST WASHER | 0,10mm | | ♦ | ♦ | ♦ | ♦ |
| 18 | K21.04150 | 406 337 0352 | | 1 | GRUP MİLİ ÖN BİLYA RAYNELİ | THRUST WASHER | 0,20mm | | ♦ | ♦ | ♦ | ♦ |
| 18 | K21.94150 | | | 1 | GRUP MİLİ ÖN BİLYA RAYNELİ | THRUST WASHER | 0,25mm | | ♦ | ♦ | ♦ | ♦ |
| 18 | K21.04338 | 406 337 0452 | | 1 | GRUP MİLİ ÖN BİLYA RAYNELİ | THRUST WASHER | 0,30mm | | ♦ | ♦ | ♦ | ♦ |
| 18 | K21.04196 | 389 263 5352 | (389 263 3252) | 1 | GRUP MİLİ ÖN BİLYA RAYNELİ | THRUST WASHER | 0,40mm | | ♦ | ♦ | ♦ | ♦ |
| 18 | K21.04194 | 389 263 3352 | | 1 | GRUP MİLİ ÖN BİLYA RAYNELİ | THRUST WASHER | 0,45mm | | ♦ | ♦ | ♦ | ♦ |
| 18 | K21.06719 | 389 263 5652 | | 1 | GRUP MİLİ ÖN BİLYA RAYNELİ | THRUST WASHER | 0,49mm | | ♦ | ♦ | ♦ | ♦ |
| 18 | K21.04197 | 389 263 5852 | (389 263 3552) | 1 | GRUP MİLİ ÖN BİLYA RAYNELİ | THRUST WASHER | 0,55mm | | ♦ | ♦ | ♦ | ♦ |
| 18 | K21.04340 | 389 263 6052 | | 1 | GRUP MİLİ ÖN BİLYA RAYNELİ | THRUST WASHER | 0,61mm | | ♦ | ♦ | ♦ | ♦ |

NOTES :
Parts encoded alphabetic and numaric are used together.

NOTLAR :
Alfabetik ve rakam ile kodlanan parçalar birlikte kullanılır.





Original parts names, oem numbers, symbols and descriptions used in this catalogue are for reference purposes only.

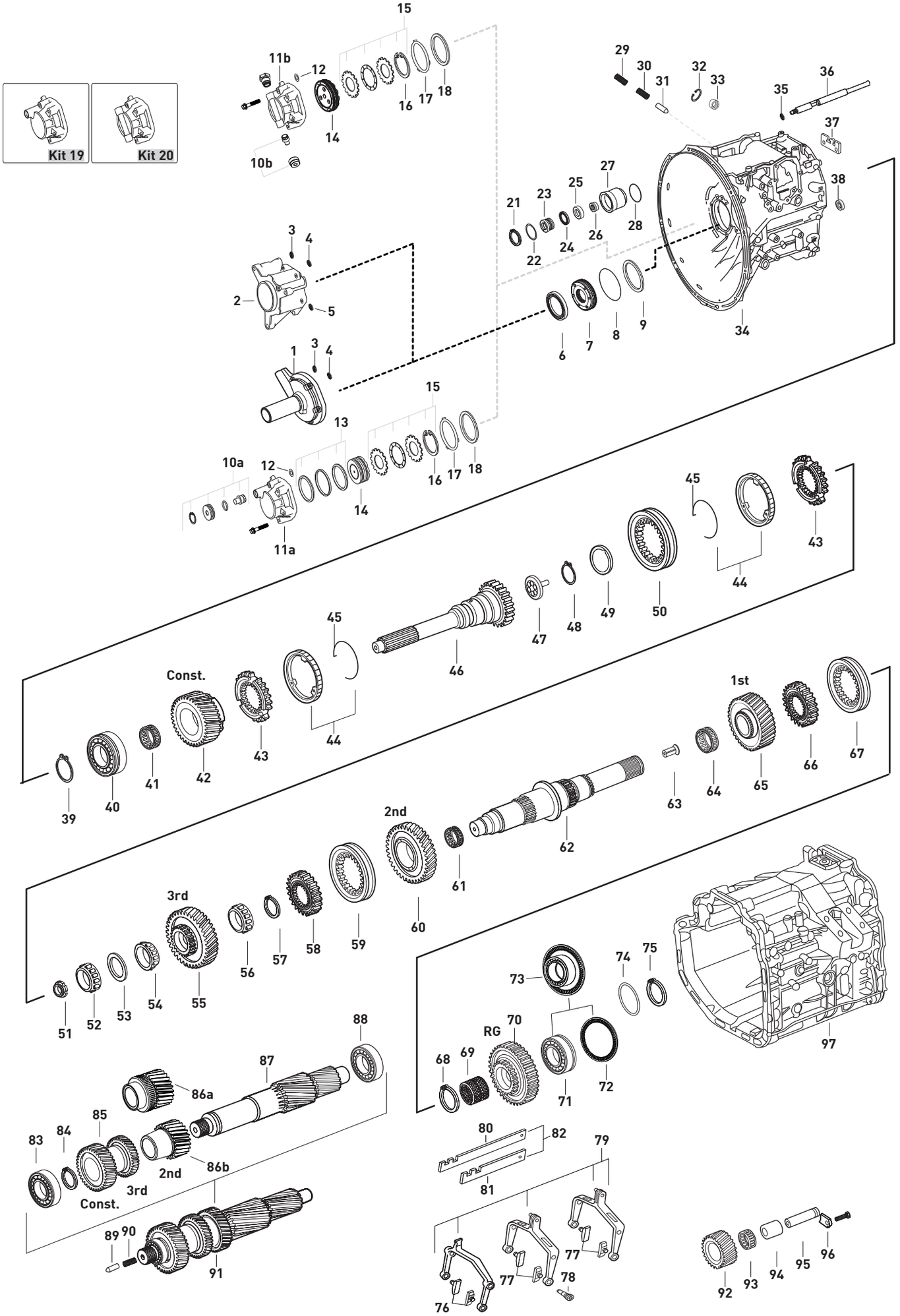






Original parts names, oem numbers, symbols and descriptions used in this catalogue are for reference purposes only.

| Fig. | Kacmaz No | Oem No | Oem Old No | Pcs. | Ürün Tanımı | Description | Sizes | Not | 715360 | 715361 | 715364 | 715366 |
|---|---|---|---|---|---|---|---|---|---|---|---|---|
| 18 | K21.04198 | 389 263 6352 | (389 263 3852) | 1 | GRUP MİLİ ÖN BİLYA RAYNELİ | THRUST WASHER | 0,70mm | | ♦ | ♦ | ♦ | ♦ |
| 18 | K21.04154 | 389 263 3952 | | 1 | GRUP MİLİ ÖN BİLYA RAYNELİ | THRUST WASHER | 0,75mm | | ♦ | ♦ | ♦ | ♦ |
| 18 | K21.04199 | 389 263 6852 | | 1 | GRUP MİLİ ÖN BİLYA RAYNELİ | THRUST WASHER | 0,85mm | | ♦ | ♦ | ♦ | ♦ |
| 18 | K21.04200 | 389 263 7352 | | 1 | GRUP MİLİ ÖN BİLYA RAYNELİ | THRUST WASHER | 1,00mm | | ♦ | ♦ | ♦ | ♦ |
| 18 | K21.04201 | 389 263 7852 | | 1 | GRUP MİLİ ÖN BİLYA RAYNELİ | THRUST WASHER | 1,15mm | | ♦ | ♦ | ♦ | ♦ |
| 18 | K21.04202 | 389 263 8352 | | 1 | GRUP MİLİ ÖN BİLYA RAYNELİ | THRUST WASHER | 1,30mm | | ♦ | ♦ | ♦ | ♦ |
| 19 | K21.06487 | | | 1 | GRUP DURDURUCU KAPAĞI KOMPLE | REPAIR KIT | | (A) | ♦ | ♦ | ♦ | ♦ |
| 20 | K21.06948 | 960 260 5965 | (960 260 4865) | 1 | GRUP DURDURUCU KAPAĞI KOMPLE | REPAIR KIT | | (B) | ♦ | ♦ | ♦ | ♦ |
| 21 | | 006 994 4241 | (000472 065001) | 1 | TAKVİYE PİSTON SEKMANI | RETAINING RING | 65X2,5mm | | ♦ | ♦ | ♦ | ♦ |
| 22 | K21.04233 | 389 262 2555 | | 1 | TAKVİYE SİLİNDİR PULU | SPACER WASHER | 0,70mm | | ♦ | ♦ | ♦ | ♦ |
| 22 | K21.04234 | 389 262 2655 | | 1 | TAKVİYE SİLİNDİR PULU | SPACER WASHER | 0,90mm | | ♦ | ♦ | ♦ | ♦ |
| 22 | K21.04112 | 389 262 3254 | | 1 | TAKVİYE SİLİNDİR PULU | SPACER WASHER | 1,05mm | | ♦ | ♦ | ♦ | ♦ |
| 22 | K21.04111 | 389 262 3354 | | 1 | TAKVİYE SİLİNDİR PULU | SPACER WASHER | 1,10mm | | ♦ | ♦ | ♦ | ♦ |
| 22 | K21.04109 | 389 262 3554 | | 1 | TAKVİYE SİLİNDİR PULU | SPACER WASHER | 1,20mm | | ♦ | ♦ | ♦ | ♦ |
| 22 | K21.04105 | 389 262 2052 | | 1 | TAKVİYE SİLİNDİR PULU | SPACER WASHER | 1,40mm | | ♦ | ♦ | ♦ | ♦ |
| 22 | K21.04093 | 389 262 2355 | | 1 | TAKVİYE SİLİNDİR PULU | SPACER WASHER | 1,79mm | | ♦ | ♦ | ♦ | ♦ |
| 22 | K21.04025 | 389 262 3252 | | 1 | TAKVİYE SİLİNDİR PULU | SPACER WASHER | 2,00mm | | ♦ | ♦ | ♦ | ♦ |
| 22 | K21.04024 | 389 262 3352 | | 1 | TAKVİYE SİLİNDİR PULU | SPACER WASHER | 2,50mm | | ♦ | ♦ | ♦ | ♦ |
| 23 | K21.06994 | 945 267 0218 | (387 267 0918) | 1 | TAKVİYE MİL PİSTONU | PISTON | | | ♦ | ♦ | ♦ | ♦ |
| | | | (387 267 0618) | | | | | | | | | |
| 24 | K21.03524 | 006 997 6447 | (020 997 6647) | 1 | TAKVİYE HAVA KEÇESİ | OIL SEAL | 41X48X11,5mm | | ♦ | ♦ | ♦ | ♦ |
| | | | (012 997 3347) | | | | | | | | | |
| 25 | K21.04178 | 387 267 0650 | (387 267 0250) | 1 | TAKVİYE SİLİNDİR BURCU | BUSHING | 34X22X8mm | | ♦ | ♦ | ♦ | ♦ |
| 26 | K21.03523 | 000 267 0197 | (000 267 0397) | 1 | TAKVİYE HİLAL MİL KEÇESİ | OIL SEAL | 22X32X8mm | | ♦ | ♦ | ♦ | ♦ |
| 27 | K21.06036 | 945 267 0819 | (945 267 0119) | 1 | TAKVİYE SİLİNDİR GÖVDESİ | CYLINDER | | | ♦ | ♦ | ♦ | ♦ |
| | | | (945 267 0719) | | | | | | | | | |
| | | | (945 267 0019) | | | | | | | | | |
| 28 | K21.06534 | 022 997 4248 | | 1 | TAKVİYE SİLİNDİR ORİNGİ | O-RING | 55,6X3mm | | ♦ | ♦ | ♦ | ♦ |
| 29 | K21.06015 | 387 993 4501 | | 1 | ŞANZ.TAKVİYE KİLİT FİŞEK YAYI | SPRING | 6,2X63mm | | ♦ | ♦ | ♦ | ♦ |
| 30 | K21.03500 | 387 993 4401 | (387 993 2501) | 1 | KİLİT YAYI | SPRING | 9,8X63,3mm | | ♦ | ♦ | ♦ | ♦ |
| 31 | K21.03492 | 389 267 1174 | (387 267 0074) | 1 | KİLİT FİŞEĞİ | PIN | | | ♦ | ♦ | ♦ | ♦ |
| 32 | K21.06579 | 945 267 0073 | | 1 | ÖN GÖVDE MASURA BİLYA SEKMANI | SEEGER RING | | | | ♦ | | |
| 33 | K21.06580 | 002 981 5712 | (945 268 0150) | 1 | ÖN GÖVDE MASURA BİLYA | BEARING | 25X39X20mm | | | ♦ | | |
| 34 | | 947 260 6111 | | 1 | ŞANZIMAN ÖN GÖVDE | HOUSING | | | | ♦ | | |
| 34 | | 960 260 6723 | | 1 | ŞANZIMAN ÖN GÖVDE | HOUSING | | | ♦ | | | ♦ |
| 34 | | 960 260 4012 | | 1 | ŞANZIMAN ÖN GÖVDE | HOUSING | | | | | ♦ | |
| 35 | K21.04160 | 387 263 2652 | | 1 | TAKVİYE HİLAL MİL PULU | SPACER WASHER | 0,20mm | | ♦ | ♦ | ♦ | ♦ |
| 35 | K21.04161 | 387 263 2752 | | 1 | TAKVİYE HİLAL MİL PULU | SPACER WASHER | 0,40mm | | ♦ | ♦ | ♦ | ♦ |
| 35 | | 387 263 2852 | | 1 | TAKVİYE HİLAL MİL PULU | SPACER WASHER | 0,60mm | | ♦ | ♦ | ♦ | ♦ |
| 35 | | 387 263 3052 | | 1 | TAKVİYE HİLAL MİL PULU | SPACER WASHER | 1,00mm | | ♦ | ♦ | ♦ | ♦ |
| 36 | | 960 267 1917 | | 1 | TAKVİYE HİLAL MİLİ | G SHIFT RAIL | | | ♦ | ♦ | ♦ | ♦ |
| 37 | K21.06847 | 960 265 0545 | | 1 | VİTES HİLAL ÇITA KİLİTLEMESİ | GUIDE | | | ♦ | ♦ | ♦ | ♦ |
| 38 | | 004 992 6601 | | 1 | TAKVİYE HİLAL MİL BURCU | BUSHING | | | ♦ | | ♦ | ♦ |
| 38 | K21.04252 | 000 992 7603 | (389 267 0050) | 1 | TAKVİYE HİLAL MİL BURCU | BUSHING | 21X27X16mm | | | ♦ | | |
| 39 | K21.04347 | 387 262 8673 | | 1 | PRİZDİREK ÖN BİLYA SEKMANI | RETAINING RING | 3,15mm | | ♦ | ♦ | ♦ | ♦ |
| 39 | K21.04346 | 387 262 8773 | | 1 | PRİZDİREK ÖN BİLYA SEKMANI | RETAINING RING | 3,20mm | | ♦ | ♦ | ♦ | ♦ |
| 39 | K21.07015 | 387 262 8873 | | 1 | PRİZDİREK ÖN BİLYA SEKMANI | RETAINING RING | 3,25mm | | ♦ | ♦ | ♦ | ♦ |
| 39 | K21.04348 | 387 262 8973 | | 1 | PRİZDİREK ÖN BİLYA SEKMANI | RETAINING RING | 3,30mm | | ♦ | ♦ | ♦ | ♦ |
| 39 | K21.07016 | 387 262 9073 | | 1 | PRİZDİREK ÖN BİLYA SEKMANI | RETAINING RING | 3,35mm | | ♦ | ♦ | ♦ | ♦ |
| 39 | K21.04349 | 387 262 9173 | | 1 | PRİZDİREK ÖN BİLYA SEKMANI | RETAINING RING | 3,40mm | | ♦ | ♦ | ♦ | ♦ |
| 39 | K21.07017 | 387 262 9273 | | 1 | PRİZDİREK ÖN BİLYA SEKMANI | RETAINING RING | 3,45mm | | ♦ | ♦ | ♦ | ♦ |
| 39 | K21.04350 | 387 262 9373 | | 1 | PRİZDİREK ÖN BİLYA SEKMANI | RETAINING RING | 3,50mm | | ♦ | ♦ | ♦ | ♦ |
| 40 | K21.03618 | 011 981 1305 | (014 981 9005) | 1 | PRİZDİREK ÖN BİLYA | ROLLER BEARING | 75X140X34,25mm | | ♦ | ♦ | ♦ | ♦ |

NOTES :
Parts encoded alphabetic and numaric are used together.

NOTLAR :
Alfabetik ve rakam ile kodlanan parçalar birlikte kullanılır.





Original parts names, oem numbers, symbols and descriptions used in this catalogue are for reference purposes only.

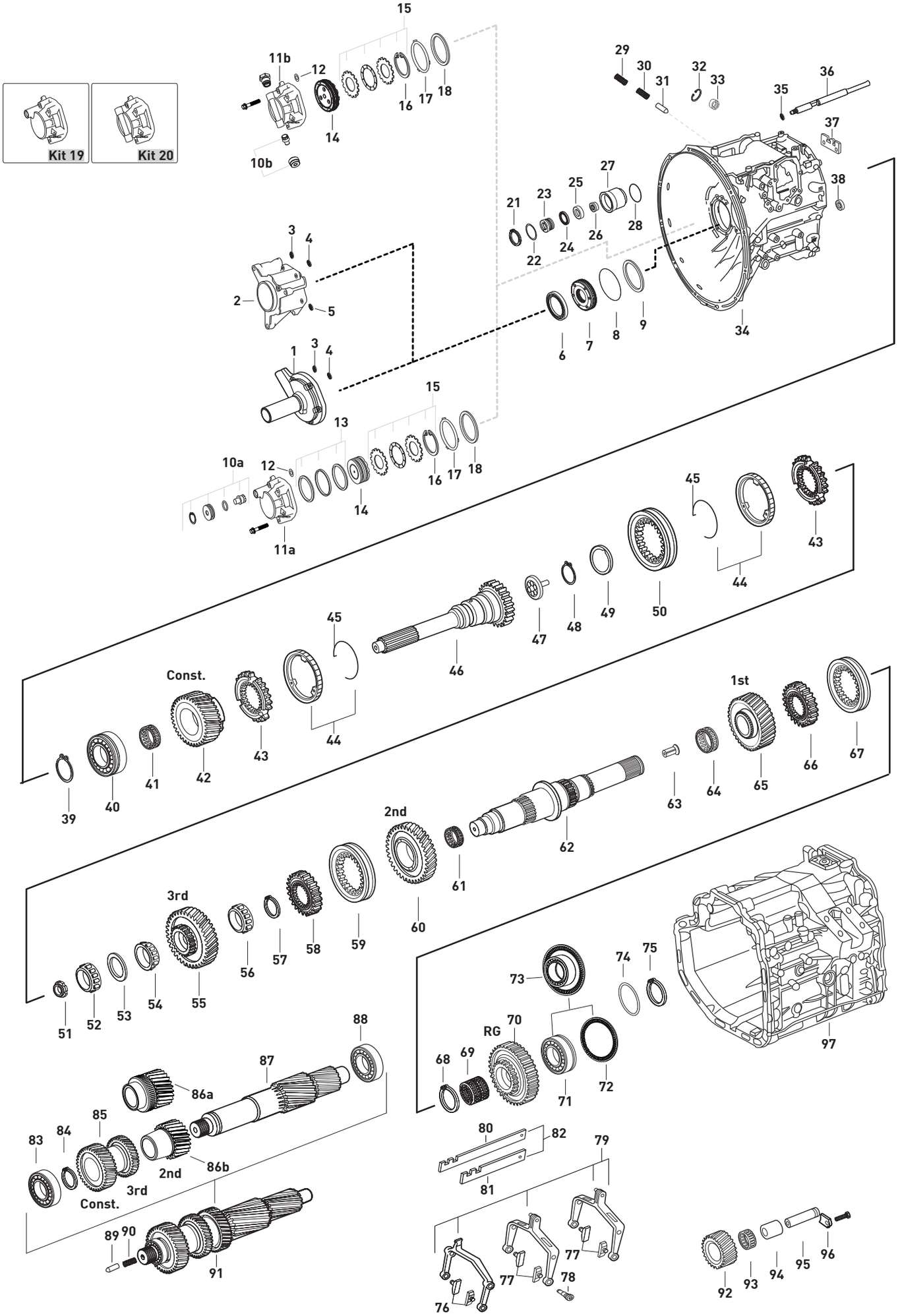




Original parts names, oem numbers, symbols and descriptions used in this catalogue are for reference purposes only.

| Fig. | Kacmaz No | Oem No | Oem Old No | Pcs. | Ürün Tanımı | Description | Sizes | Not | 715360 | 715361 | 715364 | 715366 |
|---|---|---|---|---|---|---|---|---|---|---|---|---|
| 41 | K21.03826 | 022 981 2110 | (022 981 2010) | 1 | TAKVİYE MASURA BİLYA | NEEDLE CAGE | 84X90X48mm | | ♦ | ♦ | ♦ | ♦ |
| 42 | K21.06332 | 947 262 1217 | (947 262 3510) | 1 | TAKVİYE DİŞLİSİ 37 DİŞ | CONSTANT GEAR 37 T. | | | ♦ | ♦ | ♦ | ♦ |
| | | | (948 262 2110) | | | | | | | | | |
| 43 | K21.03147 | 945 262 7734 | (945 262 3634) | 2 | TAKVİYE SENKROMENÇ | ENGAGING RING | | | ♦ | ♦ | ♦ | ♦ |
| 44 | K21.03136 | 945 260 2245 | (946 262 6337) | 2 | TAKVİYE FRENLEME (Mo) | SYNCHRONIZING CONE / Mo | | | ♦ | ♦ | ♦ | ♦ |
| 44 | K21.06274 | 947 260 2845 | (947 260 0545) | 2 | TAKVİYE FRENLEME (C) | SYNCHRONIZING CONE / C | | | ♦ | ♦ | ♦ | ♦ |
| 45 | K21.03044 | 387 262 1093 | (387 262 0693) | 2 | FRENLEME TELİ | SPRING | | | ♦ | ♦ | ♦ | ♦ |
| | | | (960 262 1393) | | | | | | | | | |
| 46 | K21.03275 | 947 262 5602 | (947 262 3902) | 1 | PRİZDİREK 60 DİŞ | INPUT SHAFT 60 T. | | | ♦ | | ♦ | ♦ |
| | | | (947 262 5002) | | | | | | | | | |
| | | | (948 262 0902) | | | | | | | | | |
| | | | (948 262 0702) | | | | | | | | | |
| 46 | K21.03274 | 947 262 3502 | | 1 | PRİZDİREK 60 DİŞ | INPUT SHAFT 60 T. | | | | ♦ | | |
| 46 | | 947 262 4802 | | 1 | PRİZDİREK 60 DİŞ | INPUT SHAFT 60 T. | | | ♦ | | | |
| 47 | K21.04001 | 976 269 0034 | (960 269 0434) | 1 | PRİZDİREK YAĞ PİPETİ | OIL COLLECTOR | | | ♦ | ♦ | ♦ | ♦ |
| 48 | K21.04002 | 000 994 9841 | | 1 | PRİZDİREK YAĞ PİPET SEKMANI | RETAINING RING | | | ♦ | ♦ | ♦ | ♦ |
| 49 | K21.03513 | 001 262 0262 | (000 262 8662) | 1 | PRİZDİREK ARKA KEÇE | OIL SEAL | 73,5X101X7mm | | ♦ | ♦ | ♦ | ♦ |
| | | | (000 262 9062) | | | | | | | | | |
| 50 | K21.03137 | 945 262 6823 | (945 262 6423) | 1 | TAKVİYE HALKA | ENGAGING SLEEVE | | | ♦ | ♦ | ♦ | ♦ |
| 51 | K21.03432 | 945 990 0250 | (945 990 0150) | 1 | KAMALI MİL SOMUNU | NUT | M30X1,5 | | ♦ | ♦ | ♦ | ♦ |
| 52 | K21.03632 | 020 981 5205 | (017 981 1305) | 1 | KAMALI MİL UÇ BİLYA | ROLLER BEARING | 39,69X40,39mm | | ♦ | ♦ | ♦ | ♦ |
| | | | (015 981 8505) | | | | | | | | | |
| 53 | K21.04024 | 389 262 3352 | | 1 | KAMALI MİL AYAR PULU | THRUST WASHER | 2,50mm | | ♦ | ♦ | ♦ | ♦ |
| 53 | K21.04025 | 389 262 3252 | | 1 | KAMALI MİL AYAR PULU | THRUST WASHER | 2,00mm | | ♦ | ♦ | ♦ | ♦ |
| 53 | K21.04026 | 389 262 3152 | | 1 | KAMALI MİL AYAR PULU | THRUST WASHER | 1,95mm | | ♦ | ♦ | ♦ | ♦ |
| 53 | K21.04027 | 389 262 3052 | | 1 | KAMALI MİL AYAR PULU | THRUST WASHER | 1,90mm | | ♦ | ♦ | ♦ | ♦ |
| 53 | K21.04028 | 389 262 2952 | | 1 | KAMALI MİL AYAR PULU | THRUST WASHER | 1,85mm | | ♦ | ♦ | ♦ | ♦ |
| 53 | K21.04092 | 389 262 2455 | | 1 | KAMALI MİL AYAR PULU | THRUST WASHER | 1,82mm | | ♦ | ♦ | ♦ | ♦ |
| 53 | K21.04093 | 389 262 2355 | | 1 | KAMALI MİL AYAR PULU | THRUST WASHER | 1,79mm | | ♦ | ♦ | ♦ | ♦ |
| 53 | K21.04094 | 389 262 2255 | | 1 | KAMALI MİL AYAR PULU | THRUST WASHER | 1,76mm | | ♦ | ♦ | ♦ | ♦ |
| 53 | K21.04095 | 389 262 2155 | | 1 | KAMALI MİL AYAR PULU | THRUST WASHER | 1,73mm | | ♦ | ♦ | ♦ | ♦ |
| 53 | K21.04096 | 389 262 2055 | | 1 | KAMALI MİL AYAR PULU | THRUST WASHER | 1,67mm | | ♦ | ♦ | ♦ | ♦ |
| 53 | K21.04097 | 389 262 1955 | | 1 | KAMALI MİL AYAR PULU | THRUST WASHER | 1,64mm | | ♦ | ♦ | ♦ | ♦ |
| 53 | K21.04098 | 389 262 1855 | | 1 | KAMALI MİL AYAR PULU | THRUST WASHER | 1,61mm | | ♦ | ♦ | ♦ | ♦ |
| 53 | K21.04099 | 389 262 1755 | | 1 | KAMALI MİL AYAR PULU | THRUST WASHER | 1,58mm | | ♦ | ♦ | ♦ | ♦ |
| 53 | K21.04100 | 389 262 2352 | | 1 | KAMALI MİL AYAR PULU | THRUST WASHER | 1,55mm | | ♦ | ♦ | ♦ | ♦ |
| 53 | K21.04101 | 389 262 1655 | | 1 | KAMALI MİL AYAR PULU | THRUST WASHER | 1,52mm | | ♦ | ♦ | ♦ | ♦ |
| 53 | K21.04102 | 389 262 1555 | | 1 | KAMALI MİL AYAR PULU | THRUST WASHER | 1,49mm | | ♦ | ♦ | ♦ | ♦ |
| 53 | K21.04103 | 389 262 1455 | | 1 | KAMALI MİL AYAR PULU | THRUST WASHER | 1,46mm | | ♦ | ♦ | ♦ | ♦ |
| 53 | K21.04104 | 389 262 1355 | | 1 | KAMALI MİL AYAR PULU | THRUST WASHER | 1,43mm | | ♦ | ♦ | ♦ | ♦ |
| 53 | K21.04105 | 389 262 2052 | | 1 | KAMALI MİL AYAR PULU | THRUST WASHER | 1,40mm | | ♦ | ♦ | ♦ | ♦ |
| 53 | K21.04106 | 389 262 1952 | | 1 | KAMALI MİL AYAR PULU | THRUST WASHER | 1,35mm | | ♦ | ♦ | ♦ | ♦ |
| 53 | K21.04107 | 389 262 2754 | | 1 | KAMALI MİL AYAR PULU | THRUST WASHER | 1,30mm | | ♦ | ♦ | ♦ | ♦ |
| 53 | K21.04108 | 389 262 3654 | | 1 | KAMALI MİL AYAR PULU | THRUST WASHER | 1,25mm | | ♦ | ♦ | ♦ | ♦ |
| 53 | K21.04109 | 389 262 3554 | | 1 | KAMALI MİL AYAR PULU | THRUST WASHER | 1,20mm | | ♦ | ♦ | ♦ | ♦ |
| 53 | K21.04110 | 389 262 3454 | | 1 | KAMALI MİL AYAR PULU | THRUST WASHER | 1,15mm | | ♦ | ♦ | ♦ | ♦ |
| 53 | K21.04111 | 389 262 3354 | | 1 | KAMALI MİL AYAR PULU | THRUST WASHER | 1,10mm | | ♦ | ♦ | ♦ | ♦ |
| 53 | K21.04112 | 389 262 3254 | | 1 | KAMALI MİL AYAR PULU | THRUST WASHER | 1,05mm | | ♦ | ♦ | ♦ | ♦ |
| 53 | K21.04113 | 389 262 2854 | | 1 | KAMALI MİL AYAR PULU | THRUST WASHER | 0,50mm | | ♦ | ♦ | ♦ | ♦ |
| 53 | K21.94113 | | | 1 | KAMALI MİL AYAR PULU | THRUST WASHER | 0,40mm | | ♦ | ♦ | ♦ | ♦ |
| 53 | K21.84113 | | | 1 | KAMALI MİL AYAR PULU | THRUST WASHER | 0,30mm | | ♦ | ♦ | ♦ | ♦ |
| 53 | K21.74113 | | | 1 | KAMALI MİL AYAR PULU | THRUST WASHER | 0,20mm | | ♦ | ♦ | ♦ | ♦ |
| 53 | K21.64113 | | | 1 | KAMALI MİL AYAR PULU | THRUST WASHER | 0,10mm | | ♦ | ♦ | ♦ | ♦ |

NOTES :
Parts encoded alphabetic and numaric are used together.

NOTLAR :
Alfabetik ve rakam ile kodlanan parçalar birlikte kullanılır.





Original parts names, oem numbers, symbols and descriptions used in this catalogue are for reference purposes only.

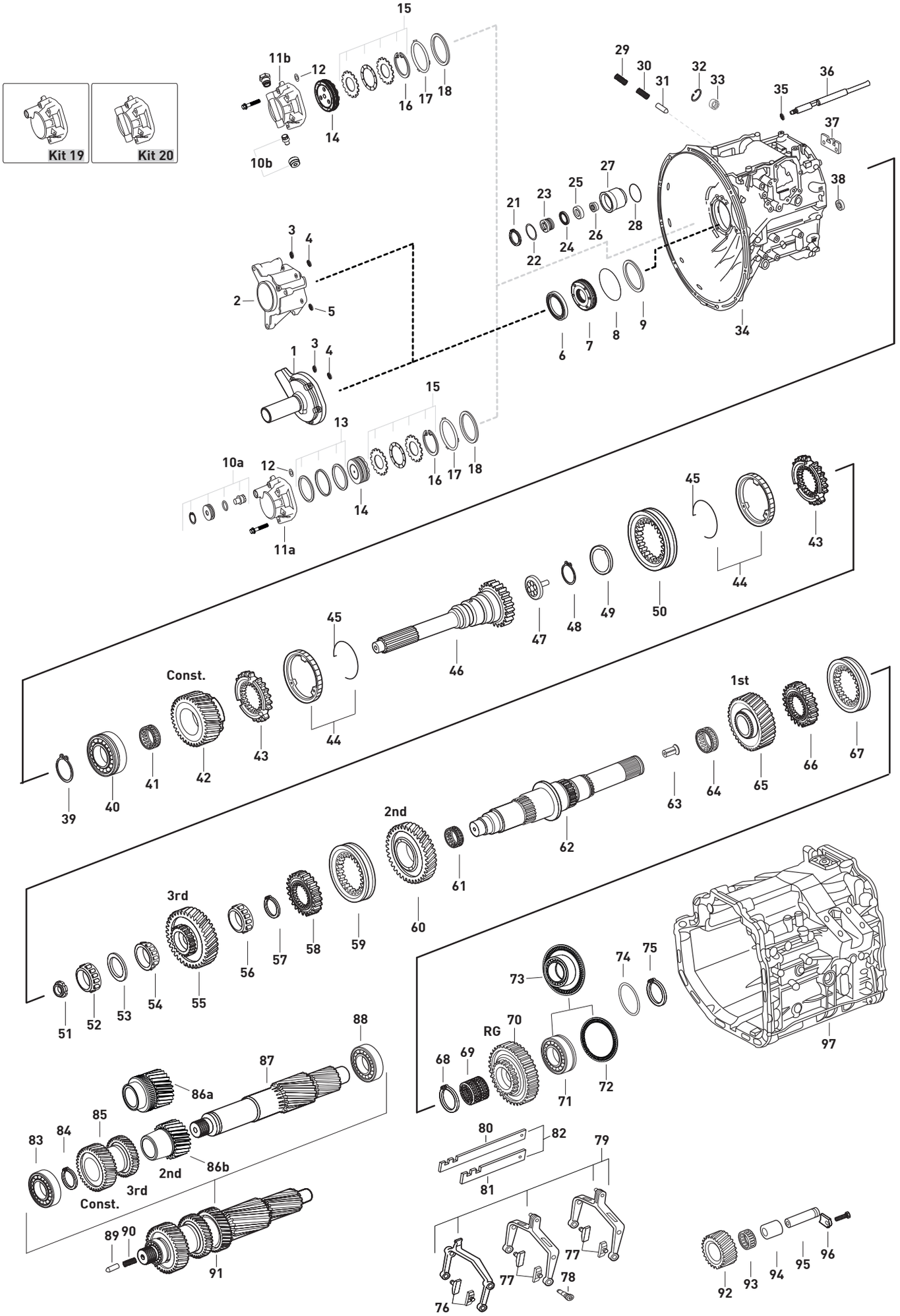




Original parts names, oem numbers, symbols and descriptions used in this catalogue are for reference purposes only.

| Fig. | Kacmaz No | Oem No | Oem Old No | Pcs. | Ürün Tanımı | Description | Sizes | Not | 715360 | 715361 | 715364 | 715366 |
|---|---|---|---|---|---|---|---|---|---|---|---|---|
| 54 | K21.03629 | 015 981 7605 | (015 981 2005) | 1 | 3.VİTES DİŞLİ ÖN BİLYA | ROLLER BEARING | 50X41mm | | ♦ | ♦ | ♦ | ♦ |
| | | | (011 981 4705) | | | | | | | | | |
| | | | (011 981 5305) | | | | | | | | | |
| 55 | K21.03465 | 947 262 1517 | (947 262 0117) | 1 | 3.VİTES DİŞLİSİ 34 DİŞ | GEAR 3rd 34 T. | | (A)(B) | ♦ | ♦ | ♦ | ♦ |
| | | | (948 262 3410) | | | | | | | | | |
| | | | (948 262 2610) | | | | | | | | | |
| | | | (947 262 0617) | | | | | | | | | |
| | | | (948 262 0410) | | | | | | | | | |
| 55 | K21.06392 | 947 262 1510 | | 1 | 3.VİTES DİŞLİSİ 34 DİŞ | GEAR 3rd 34 T. | | (C) | | ♦ | | |
| 56 | K21.03636 | 017 981 8305 | | 1 | 3.VİTES DİŞLİ ARKA BİLYA | ROLLER BEARING | 52X24mm | (A)(B) | ♦ | ♦ | ♦ | ♦ |
| 56 | K21.03631 | 015 981 7705 | (017 981 5705) | 1 | 3.VİTES DİŞLİ ARKA BİLYA | ROLLER BEARING | 55X23mm | (C) | | ♦ | | |
| | | | (014 981 1605) | | | | | | | | | |
| 57 | K21.06930 | 387 262 7873 | | 1 | 2./3.VİTES YILDIZ DİŞLİ SEKMANI | RETAINING RING | 2,80mm | | ♦ | ♦ | ♦ | ♦ |
| 57 | K21.06669 | 387 262 7673 | | 1 | 2./3.VİTES YILDIZ DİŞLİ SEKMANI | RETAINING RING | 2,70mm | | ♦ | ♦ | ♦ | ♦ |
| 57 | K21.06929 | 387 262 0973 | | 1 | 2./3.VİTES YILDIZ DİŞLİ SEKMANI | RETAINING RING | 2,65mm | | ♦ | ♦ | ♦ | ♦ |
| 57 | K21.04337 | 387 262 0873 | | 1 | 2./3.VİTES YILDIZ DİŞLİ SEKMANI | RETAINING RING | 2,60mm | | ♦ | ♦ | ♦ | ♦ |
| 57 | K21.07019 | 387 262 0773 | | 1 | 2./3.VİTES YILDIZ DİŞLİ SEKMANI | RETAINING RING | 2,55mm | | ♦ | ♦ | ♦ | ♦ |
| 57 | K21.04352 | 387 262 0673 | | 1 | 2./3.VİTES YILDIZ DİŞLİ SEKMANI | RETAINING RING | 2,50mm | | ♦ | ♦ | ♦ | ♦ |
| 57 | K21.07018 | 387 262 0573 | | 1 | 2./3.VİTES YILDIZ DİŞLİ SEKMANI | RETAINING RING | 2,45mm | | ♦ | ♦ | ♦ | ♦ |
| 57 | K21.04336 | 387 262 0473 | | 1 | 2./3.VİTES YILDIZ DİŞLİ SEKMANI | RETAINING RING | 2,40mm | | ♦ | ♦ | ♦ | ♦ |
| 58 | K21.03280 | 947 262 2635 | (947 262 1435) | 1 | 2./ 3. VİTES YILDIZ DİŞLİ | SYNCHRONIZER HUB | | | ♦ | ♦ | ♦ | ♦ |
| | | | (947 262 1335) | | | | | | | | | |
| | | | (947 262 1635) | | | | | | | | | |
| 59 | K21.03282 | 947 262 2223 | (947 262 1423) | 1 | 2./3.VİTES HALKASI | ENGAGING SLEEVE | | | ♦ | ♦ | ♦ | ♦ |
| | | | (947 262 1123) | | | | | | | | | |
| | | | (947 262 0423) | | | | | | | | | |
| 60 | K21.03466 | 947 262 2712 | (947 262 2412) | 1 | 2.VİTES DİŞLİSİ 38 DİŞ | GEAR 2nd 38 T | | | ♦ | ♦ | ♦ | ♦ |
| | | | (947 262 2012) | | | | | | | | | |
| | | | (947 262 0812) | | | | | | | | | |
| 61 | K21.03817 | 019 981 4410 | (007 981 4210) | 1 | 2.VİTES MASURA BİLYA | NEEDLE CAGE | 75X83X55mm | | ♦ | ♦ | ♦ | ♦ |
| | | | (008 981 8310) | | | | | | | | | |
| | | | (009 981 0010) | | | | | | | | | |
| 62 | K21.03467 | 947 262 2505 | (947 262 1705) | 1 | KAMALI MİL | MAIN SHAFT | | (A)(D) | ♦ | ♦ | ♦ | ♦ |
| | | | (947 262 2305) | | | | | | | | | |
| 62 | K21.03287 | 947 262 1605 | | 1 | KAMALI MİL | MAIN SHAFT | | (B) | | ♦ | | |
| 62 | K21.03288 | 947 262 1505 | (947 262 0705) | 1 | KAMALI MİL | MAIN SHAFT | | (C) | | ♦ | | |
| 63 | K21.04364 | 001 990 2759 | | 1 | KAMALI MİL YAĞ BORUSU | OIL PIPE | | | ♦ | ♦ | ♦ | ♦ |
| 64 | K21.03827 | 013 981 1210 | (006 981 6410) | 2 | 1.VİTES MASURA BİLYA | NEEDLE CAGE | 75X83X33mm | | ♦ | ♦ | ♦ | ♦ |
| | | | (015 981 0210) | | | | | | | | | |
| | | | (021 981 5710) | | | | | | | | | |
| 65 | K21.03468 | 947 262 5310 | (947 262 5110) | 1 | 1.VİTES DİŞLİSİ 41 DİŞ | GEAR 1st 41 T. | | | ♦ | ♦ | ♦ | ♦ |
| | | | (948 262 0610) | | | | | | | | | |
| 66 | K21.03280 | 947 262 2635 | (947 262 1435) | 1 | 1./GERİ VİTES YILDIZ DİŞLİ | SYNCHRONIZER HUB | | | ♦ | ♦ | ♦ | ♦ |
| | | | (947 262 1335) | | | | | | | | | |
| | | | (947 262 1635) | | | | | | ♦ | ♦ | ♦ | ♦ |
| 67 | K21.03282 | 947 262 2223 | (947 262 1423) | 1 | 1./GERİ VİTES HALKASI | ENGAGING SLEEVE | | | ♦ | ♦ | ♦ | ♦ |
| | | | (947 262 1123) | | | | | | | | | |
| | | | (947 262 0423) | | | | | | | | | |
| 68 | K21.06930 | 387 262 7873 | | 1 | 1./2.VİTES YILDIZ DİŞLİ SEKMANI | RETAINING RING | 2,80mm | | ♦ | ♦ | ♦ | ♦ |
| 68 | K21.06669 | 387 262 7673 | | 1 | 1./2.VİTES YILDIZ DİŞLİ SEKMANI | RETAINING RING | 2,70mm | | ♦ | ♦ | ♦ | ♦ |
| 68 | K21.06929 | 387 262 0973 | | 1 | 1./2.VİTES YILDIZ DİŞLİ SEKMANI | RETAINING RING | 2,65mm | | ♦ | ♦ | ♦ | ♦ |
| 68 | K21.04337 | 387 262 0873 | | 1 | 1./2.VİTES YILDIZ DİŞLİ SEKMANI | RETAINING RING | 2,60mm | | ♦ | ♦ | ♦ | ♦ |
| 68 | K21.07019 | 387 262 0773 | | 1 | 1./2.VİTES YILDIZ DİŞLİ SEKMANI | RETAINING RING | 2,55mm | | ♦ | ♦ | ♦ | ♦ |

NOTES :
Parts encoded alphabetic and numaric are used together.

NOTLAR :
Alfabetik ve rakam ile kodlanan parçalar birlikte kullanılır.





Original parts names, oem numbers, symbols and descriptions used in this catalogue are for reference purposes only.

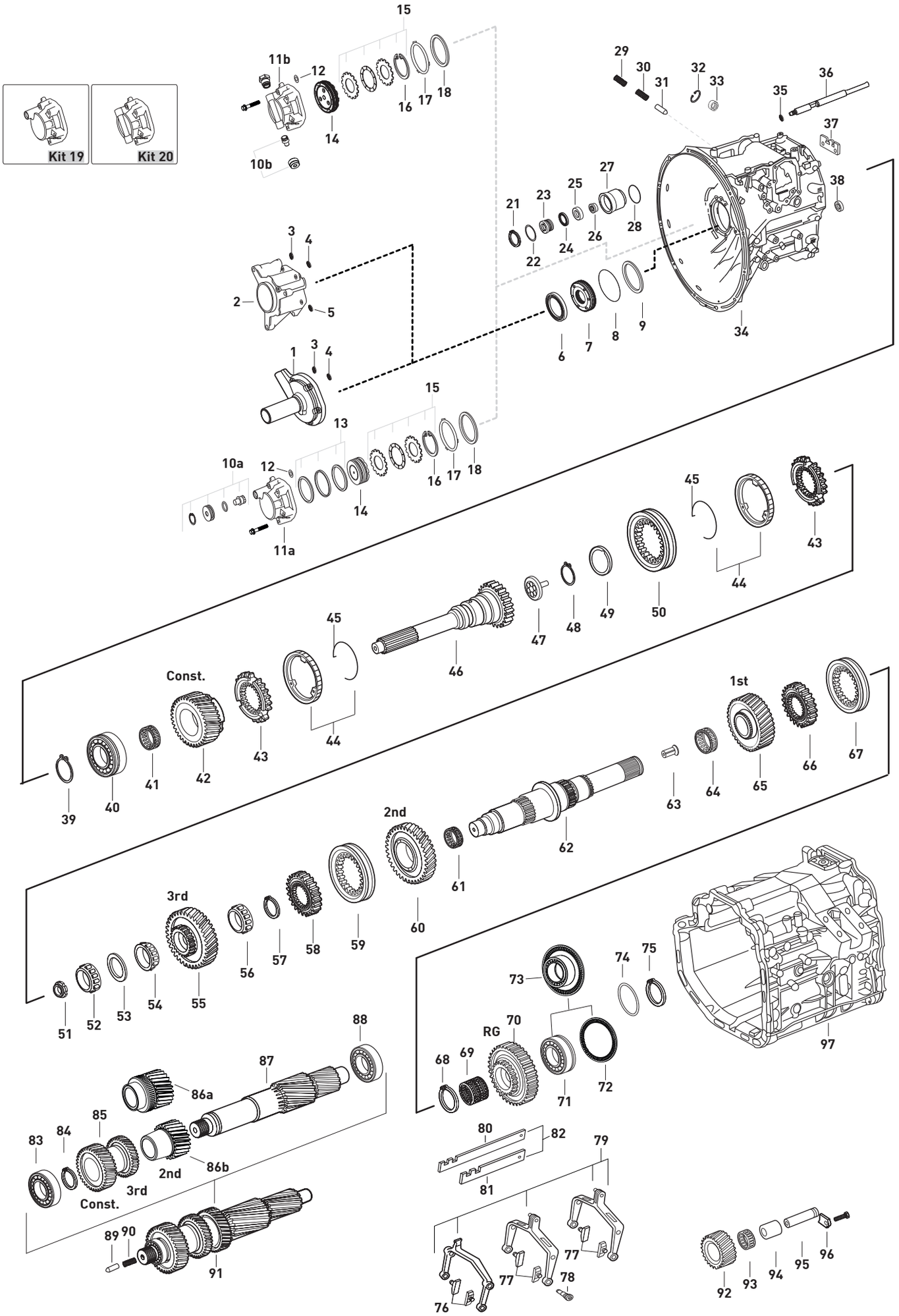




Original parts names, oem numbers, symbols and descriptions used in this catalogue are for reference purposes only.

| Fig. | Kacmaz No | Oem No | Oem Old No | Pcs. | Ürün Tanımı | Description | Sizes | Not | 715360 | 715361 | 715364 | 715366 |
|---|---|---|---|---|---|---|---|---|---|---|---|---|
| 68 | K21.04352 | 387 262 0673 | | 1 | 1./2.VİTES YILDIZ DİŞLİ SEKMANI | RETAINING RING | 2,50mm | | ♦ | ♦ | ♦ | ♦ |
| 68 | K21.07018 | 387 262 0573 | | 1 | 1./2.VİTES YILDIZ DİŞLİ SEKMANI | RETAINING RING | 2,45mm | | ♦ | ♦ | ♦ | ♦ |
| 68 | K21.04336 | 387 262 0473 | | 1 | 1./2.VİTES YILDIZ DİŞLİ SEKMANI | RETAINING RING | 2,40mm | | ♦ | ♦ | ♦ | ♦ |
| 69 | K21.03828 | 022 981 2310 | (022 981 2210) | 1 | GERİ VİTES MASURA BİLYA | NEEDLE CAGE | 64X72X44,6mm | (A)(D) | ♦ | ♦ | ♦ | ♦ |
| 69 | K21.03842 | 023 981 3010 | | 1 | GERİ VİTES MASURA BİLYA | NEEDLE CAGE | 64X72X45mm | (B)(C) | ♦ | ♦ | ♦ | ♦ |
| 70 | K21.03470 | 947 262 1933 | (947 262 2533) | 1 | GERİ VİTES DİŞLİSİ 41 DİŞ | REVERSE GEAR 41 T . | | (A)(D) | ♦ | ♦ | ♦ | ♦ |
| | | | (948 262 0033) | | | | | | | | | |
| 70 | K21.03290 | 947 262 1633 | (947 262 1533) | 1 | GERİ VİTES DİŞLİSİ 41 DİŞ | REVERSE GEAR 41 T . | | (B)(C) | ♦ | ♦ | ♦ | ♦ |
| | | | (947 262 1433) | | | | | | | | | |
| 71 | K21.03856 | 018 981 5705 | | 1 | KAMALI MİL ARKA BİLYA | ROLLER BEARING | 55X110X40mm | (A)(1) | ♦ | ♦ | ♦ | ♦ |
| 71 | K21.03637 | 016 981 4405 | (002 981 7981) | 1 | KAMALI MİL ARKA BİLYA | ROLLER BEARING | 55X110X38mm | (B)(C) (1) | | ♦ | | |
| 72 | | 947 262 0828 | | 1 | KAMALI MİL ARKA BİLYA OKUYUCU SAÇ | PULSE DISK | | | ♦ | ♦ | ♦ | ♦ |
| 73 | K21.03857 | 002 980 9502 | | 1 | KAMALI MİL ARKA BİLYA | ROLLER BEARING | 55X110X40mm | (A)(1) | ♦ | ♦ | ♦ | ♦ |
| 73 | K21.03860 | 003 980 0602 | | 1 | KAMALI MİL ARKA BİLYA | ROLLER BEARING | 55X130X51mm | (D)(2) | ♦ | ♦ | ♦ | ♦ |
| 74 | K21.04320 | | | 1 | KAMALI MİL ARKA BİLYA RAYNELİ | THRUST WASHER | 0,50mm | (1) | ♦ | ♦ | ♦ | ♦ |
| 74 | K21.04318 | | | 1 | KAMALI MİL ARKA BİLYA RAYNELİ | THRUST WASHER | 0,30mm | (1) | ♦ | ♦ | ♦ | ♦ |
| 74 | K21.04319 | | | 1 | KAMALI MİL ARKA BİLYA RAYNELİ | THRUST WASHER | 0,25mm | (1) | ♦ | ♦ | ♦ | ♦ |
| 74 | K21.04182 | 389 262 3552 | | 1 | KAMALI MİL ARKA BİLYA RAYNELİ | THRUST WASHER | 0,10mm | (2) | ♦ | ♦ | ♦ | ♦ |
| 74 | K21.04184 | 389 262 3652 | | 1 | KAMALI MİL ARKA BİLYA RAYNELİ | THRUST WASHER | 0,15mm | (2) | ♦ | ♦ | ♦ | ♦ |
| 74 | K21.04152 | 389 262 3752 | | 1 | KAMALI MİL ARKA BİLYA RAYNELİ | THRUST WASHER | 0,20mm | (2) | ♦ | ♦ | ♦ | ♦ |
| 74 | K21.94152 | | | 1 | KAMALI MİL ARKA BİLYA RAYNELİ | THRUST WASHER | 0,30mm | (2) | ♦ | ♦ | ♦ | ♦ |
| 74 | K21.04183 | 389 262 3852 | | 1 | KAMALI MİL ARKA BİLYA RAYNELİ | THRUST WASHER | 0,40mm | (2) | ♦ | ♦ | ♦ | ♦ |
| 74 | K21.94183 | | | 1 | KAMALI MİL ARKA BİLYA RAYNELİ | THRUST WASHER | 0,50mm | (2) | ♦ | ♦ | ♦ | ♦ |
| 74 | K21.04185 | 389 262 3952 | | 1 | KAMALI MİL ARKA BİLYA RAYNELİ | THRUST WASHER | 0,80mm | (2) | ♦ | ♦ | ♦ | ♦ |
| 74 | K21.06718 | 010 990 8382 | | 1 | KAMALI MİL ARKA BİLYA RAYNELİ | THRUST WASHER | 1,00mm | (2) | ♦ | ♦ | ♦ | ♦ |
| 75 | K21.06670 | 000471 048000 | | 1 | KAMALI MİL ARKA BİLYA SEKMANI | RETAINING RING | 1,75mm | | ♦ | ♦ | ♦ | ♦ |
| 75 | K21.04331 | 007 994 1841 | (006 994 9941) | 1 | KAMALI MİL ARKA BİLYA SEKMANI | RETAINING RING | 2,50mm | | | ♦ | | |
| 76 | K21.03431 | 960 265 0049 | (947 265 0349) | 2 | TAKVİYE HİLAL PABUCU | SLIDING PAD | | | ♦ | ♦ | ♦ | ♦ |
| | | | (389 265 2749) | | | | | | | | | |
| 77 | K21.03565 | 947 265 0449 | | 4 | 1./2./3./GERİ VİTES HİLAL PABUCU | SLIDING PAD | | | ♦ | ♦ | ♦ | ♦ |
| 78 | K21.04308 | 960 265 0874 | (945 265 1374) | 2 | HİLAL CİVATASI | PIN | | | ♦ | ♦ | ♦ | ♦ |
| | | | (960 265 0674) | | | | | | | | | |
| 79 | | 947 260 3530 | | Kit | VİTES HİLAL TAKIMI | REPAIR KIT | | | | ♦ | | |
| 79 | | 960 260 4030 | | Kit | VİTES HİLAL TAKIMI | REPAIR KIT | | | ♦ | | ♦ | ♦ |
| 80 | | 947 265 3404 | | 1 | 2./3.VİT.HİLAL ÇITASI | SHIFTING ROD | | | ♦ | ♦ | ♦ | ♦ |
| 81 | | 947 265 3104 | | 1 | 1./GERİ VİTES HİLAL ÇITASI | SHIFTING ROD | | | ♦ | ♦ | ♦ | ♦ |
| 82 | | 947 260 0331 | | Kit | VİTES HİLAL ÇITA TAKIMI | REPAIR KIT | | | ♦ | ♦ | ♦ | ♦ |
| 83 | K21.03606 | 015 981 9005 | (014 981 1405) | 1 | GRUP MİLİ ÖN BİLYA | ROLLER BEARING | 50,8X100X35mm | | ♦ | ♦ | ♦ | ♦ |
| | | | (012 981 7405) | | | | | | | | | |
| | | | (012 981 5105) | | | | | | | | | |
| 84 | K21.06426 | 900055 060300 | (000 264 5351) | 1 | GRUP MİLİ ÖN BİLYA SEKMANI | RETAINING RING | 3,00mm | | ♦ | ♦ | ♦ | ♦ |
| 85 | K21.06333 | 947 263 2110 | | 1 | TAK.VE 3.VİT.DİŞ.KARŞ. 28/33 DİŞ | DOUBLE GEAR Const./3rd 28/33 T. | | | ♦ | ♦ | ♦ | ♦ |
| 86a | K21.06393 | 947 260 3519 | | 1 | 2.VİT.DİŞLİ KARŞILIĞI 23 DİŞ (Devir Sensörlü) | GEAR 2nd 23 T. (With Speed Sensor) | | | ♦ | ♦ | ♦ | ♦ |
| 86b | K21.03298 | 947 263 0512 | (947 263 0312) | 1 | 2.VİT.DİŞLİ KARŞILIĞI 23 DİŞ (Devir Sensörsüz) | GEAR 2nd 23 T. (W/Out Speed Sensor) | | | | ♦ | | |
| | | | (947 263 0212) | | | | | | | | | |
| | | | (947 263 0112) | | | | | | | | | |
| 87 | K21.03302 | 947 263 2402 | | 1 | GRUP MİLİ 15/15/18/16 DİŞ | COUNTER SHAFT 15/15/18/16 T. | | | ♦ | ♦ | ♦ | ♦ |
| 88 | K21.03665 | 019 981 6105 | (002 981 7781) | 1 | GRUP MİLİ ARKA BİLYA | ROLLER BEARING | 60X110X34mm | | ♦ | ♦ | ♦ | ♦ |
| 89 | K21.03492 | 389 267 1174 | (387 267 0074) | 1 | KİLİT FİŞEĞİ | PIN | | | ♦ | ♦ | ♦ | ♦ |
| 90 | K21.03500 | 387 993 4401 | (387 993 2501) | 1 | KİLİT YAYI | SPRING | 9,8X63,3mm | | ♦ | ♦ | ♦ | ♦ |
| 91 | K21.06422 | | | Kit | GRUP MİLİ KOMPLE (devir sensörsüz) | COUNT.SHAFT COMP.(W/Out Speed Sensor) | | | ♦ | ♦ | ♦ | ♦ |
| 91 | K21.06334 | 947 260 4524 | (947 260 2724) | Kit | GRUP MİLİ KOMPLE (devir sensörlü) | COUNT.SHAFT COMP.(With Speed Sensor) | | | ♦ | ♦ | ♦ | ♦ |
| 92 | K21.06309 | 947 263 1531 | (948 263 0031) | 1 | KÜÇÜK GERİ VİTES DİŞLİSİ 19 DİŞ | REVERSE IDLER GEAR 19 T. | | (V) | ♦ | | ♦ | ♦ |

NOTES :
Parts encoded alphabetic and numaric are used together.

NOTLAR :
Alfabetik ve rakam ile kodlanan parçalar birlikte kullanılır.





Original parts names, oem numbers, symbols and descriptions used in this catalogue are for reference purposes only.

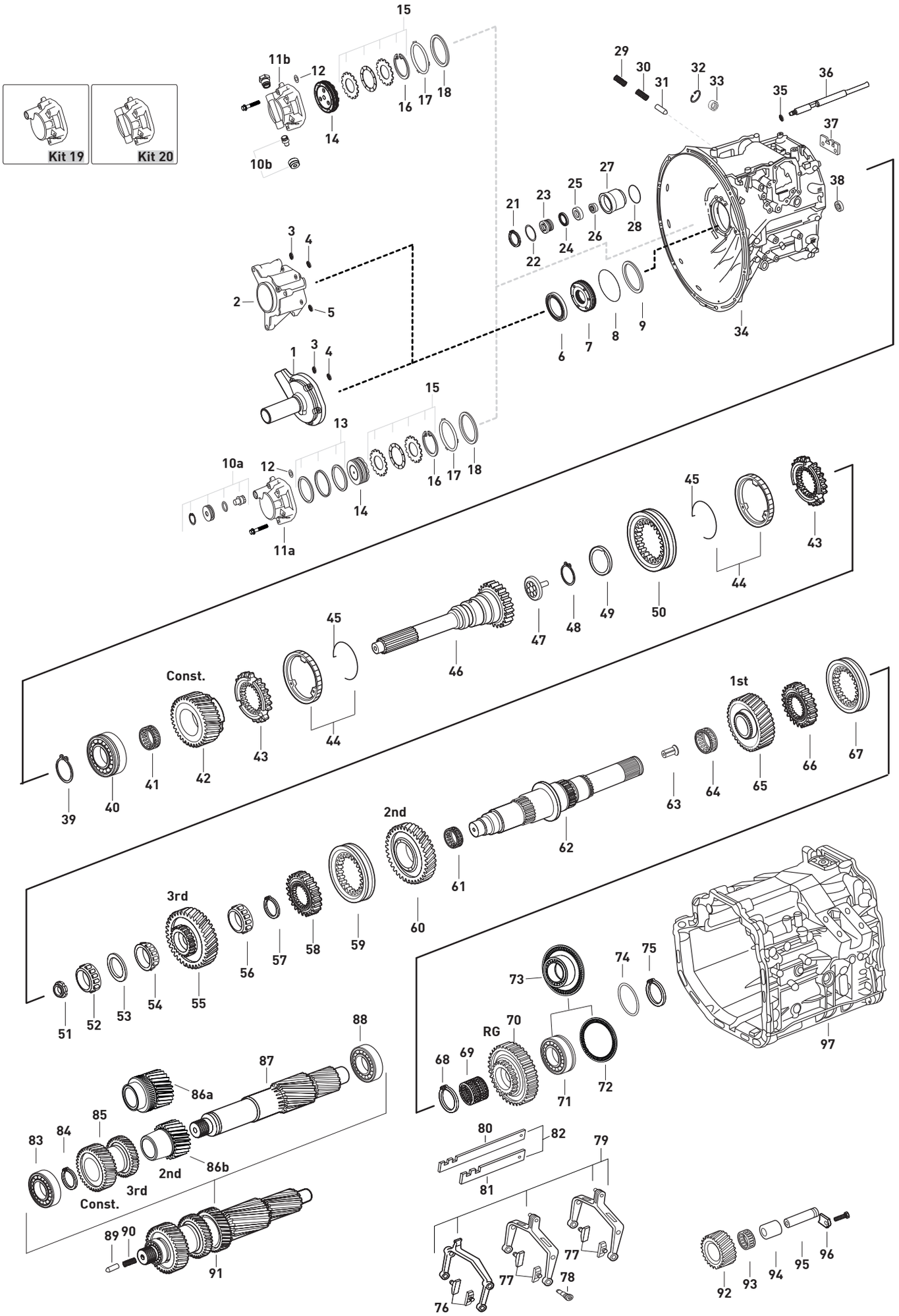




Original parts names, oem numbers, symbols and descriptions used in this catalogue are for reference purposes only.

| Fig. | Kacmaz No | Oem No | Oem Old No | Pcs. | Ürün Tanımı | Description | Sizes | Not | 715360 | 715361 | 715364 | 715366 |
|---|---|---|---|---|---|---|---|---|---|---|---|---|
| 92 | K21.06491 | 947 263 1431 | (947 263 1231) | 1 | KÜÇÜK GERİ VİTES DİŞLİSİ 19 DİŞ | REVERSE IDLER GEAR 19 T. | | (Z) | | ♦ | | |
| | | | (947 263 1131) | | | | | | | | | |
| | | | (947 263 1031) | | | | | | | | | |
| 93 | | 023 981 3110 | (003 981 2818) | 1 | KÜÇÜK GERİ VİTES MASURA BİLYA | NEEDLE CAGE | 40X50X42mm | (V) | ♦ | | ♦ | ♦ |
| | | | (004 981 1518) | | | | | | | | | |
| 93 | K21.03843 | 021 981 5610 | (021 981 2010) | 1 | KÜÇÜK GERİ VİTES MASURA BİLYA | NEEDLE CAGE | 42X50X40mm | (Z) | | ♦ | | |
| 94 | K21.06495 | 947 992 0103 | | 1 | KÜÇÜK GERİ VİTES MAS.BİLYA ÇANAĞI | BUSHING | | (V) | ♦ | | ♦ | ♦ |
| 94 | K21.06069 | 947 263 0050 | | 1 | KÜÇÜK GERİ VİTES MAS.BİLYA ÇANAĞI | BUSHING | | (Z) | | ♦ | | |
| 95 | K21.06037 | 976 263 0030 | (976 263 1230) | 1 | KÜÇÜK GERİ VİTES PİMİ | PIN | | | ♦ | ♦ | ♦ | ♦ |
| 96 | K21.07010 | 945 263 0041 | | 1 | KÜÇÜK GERİ VİTES PİM KİLİTLEMESİ | KEY | | | ♦ | | | |
| 97 | | 960 261 0626 | | 1 | ŞANZIMAN ORTA GÖVDE | HOUSING | | | ♦ | | | |
| 97 | | 960 261 0726 | | 1 | ŞANZIMAN ORTA GÖVDE | HOUSING | | | ♦ | | | |
| 97 | | 960 260 2423 | | 1 | ŞANZIMAN ORTA GÖVDE | HOUSING | | | ♦ | | | |
| 97 | | 960 260 2623 | | 1 | ŞANZIMAN ORTA GÖVDE | HOUSING | | | ♦ | | | |
| 97 | | 960 260 2723 | | 1 | ŞANZIMAN ORTA GÖVDE | HOUSING | | | ♦ | | | ♦ |
| 97 | | 960 261 1026 | | 1 | ŞANZIMAN ORTA GÖVDE | HOUSING | | | | | ♦ | |

NOTES :
Parts encoded alphabetic and numaric are used together.

NOTLAR :
Alfabetik ve rakam ile kodlanan parçalar birlikte kullanılır.





Original parts names, oem numbers, symbols and descriptions used in this catalogue are for reference purposes only.

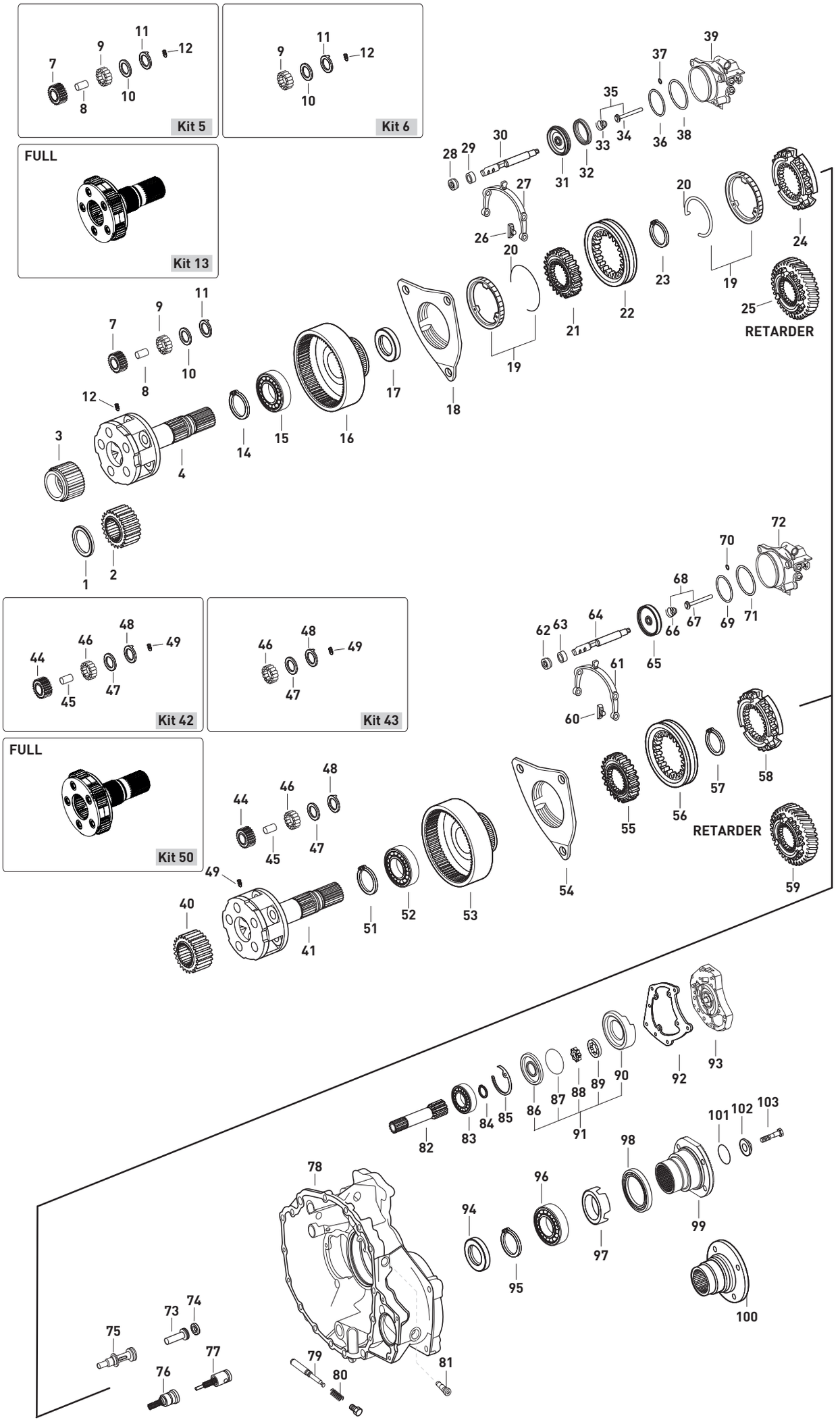






Original parts names, oem numbers, symbols and descriptions used in this catalogue are for reference purposes only.

| Fig. | Kacmaz No | Oem No | Oem Old No | Pcs. | Ürün Tanımı | Description | Sizes | Not | 715360 | 715361 | 715364 | 715366 |
|---|---|---|---|---|---|---|---|---|---|---|---|---|
| 1 | K21.04135 | 947 990 0882 | | 1 | GÜNEŞ DİŞLİ PULU | THRUST WASHER | | | | ♦ | | |
| 2 | K21.03294 | 947 262 1209 | | 1 | GÜNEŞ DİŞLİ 25 DİŞ | SUN GEAR 25 T. | | | | ♦ | | |
| 3 | K21.06306 | 947 262 1609 | | 1 | GÜNEŞ DİŞLİ 25 DİŞ | SUN GEAR 25 T. | | | ♦ | ♦ | | |
| 4 | K21.03304 | 947 260 6361 | | 1 | ŞANZIMAN HEYKELİ (BOŞ) | PLANETARY CARRIER (EMPTY) | | | ♦ | ♦ | | |
| 5 | K21.03303 | 947 260 0297 | (947 260 0197) | Kit | HEYKEL KOZA DİŞLİ TAKIMI | PLANETARY GEAR SET | | | ♦ | ♦ | | |
| 6 | K21.04351 | | | Kit | HEYKEL KOZA DİŞLİ PUL TAKIMI | REPAIR KIT | | | ♦ | ♦ | | |
| 7 | K21.06350 | | | 5 | HEYKEL KOZA DİŞLİSİ | PLANETARY GEAR | | | ♦ | ♦ | | |
| 8 | K21.06349 | | | 5 | HEYKEL KOZA DİŞLİ PİMİ | PLANETARY PIN | | | ♦ | ♦ | | |
| 9 | K21.03821 | | | 125 | HEYKEL KOZA DİŞLİ TANE BİLYA | NEEDLE ROLLER | D5X42,65 | | ♦ | ♦ | | |
| 10 | K21.04074 | 389 262 0162 | (389 262 6462) | 10 | HEYKEL KOZA DİŞLİ PULU | THRUST WASHER | | | ♦ | ♦ | | |
| | | | (389 262 0562) | | | | | | | | | |
| 11 | K21.04075 | 945 262 1162 | (945 262 0162) | 10 | HEYKEL KOZA DİŞLİ PULU | THRUST WASHER | | | ♦ | ♦ | | |
| | | | (389 262 1462) | | | | | | | | | |
| | | | (389 262 1362) | | | | | | | | | |
| | | | (389 262 1162) | | | | | | | | | |
| 12 | K21.03418 | 000914 006109 | | 5 | HEYKEL KOZA DİŞLİ VİDASI | THREADED PIN | M6X14 | | ♦ | ♦ | | |
| 13 | K21.03684 | | | Kit | ŞANZIMAN HEYKELİ (DOLU) | PLANETARY CARRIER (FULL) | | | ♦ | ♦ | | |
| 14 | K21.06864 | 000472 130000 | | 1 | ÇEMBER DİŞLİ BİLYA SEKMANI | RETAINING RING | 130X4mm | | ♦ | ♦ | | |
| 15 | K21.03614 | 008 981 1325 | (004 981 8725) | 1 | ÇEMBER DİŞLİ BİLYASI | ROLLER BEARING | 90X130X14mm | | ♦ | ♦ | | |
| | | | (004 981 8825) | | | | | | | | | |
| | | | (004 981 9425) | | | | | | | | | |
| 16 | K21.03471 | 947 262 2808 | (947 262 2508) | 1 | ÇEMBER DİŞLİ 85 DİŞ | CROWN GEAR 85 T. | | | ♦ | ♦ | | |
| | | | (947 262 2408) | | | | | | | | | |
| 17 | K21.04076 | 389 262 0251 | | 1 | ŞANZIMAN HEYKELİ ARA PULU | SPACER RING | | | ♦ | ♦ | | |
| 18 | K21.03305 | 947 260 0736 | | 1 | TABLA SENKROMENÇ | FOLLOWER RING | | | ♦ | ♦ | | |
| 19 | K21.03185 | 947 260 0945 | | 2 | AĞIR SERİ FRENLEME (Mo) | SYNCHRONIZING CONE / Mo | | | ♦ | ♦ | | |
| 19 | K21.06273 | 947 260 3045 | | 2 | AĞIR SERİ FRENLEME (C) | SYNCHRONIZING CONE / C | | | ♦ | ♦ | | |
| 20 | K21.03077 | 389 262 0293 | | 2 | FRENLEME TELİ | SPRING | | | ♦ | ♦ | | |
| 21 | K21.03079 | 389 262 4935 | (389 262 2035) | 1 | AĞIR SERİ YILDIZ DİŞLİ 73 DİŞ | SYNCHRONIZER HUB 73 T. | | | ♦ | ♦ | | |
| | | | (400 262 0335) | | | | | | | | | |
| 22 | K21.03033 | 945 262 6923 | (930 262 0623) | 1 | AĞIR SERİ HALKA | ENGAGING SLEEVE | | | ♦ | ♦ | | |
| 23 | K21.04356 | 000471 120000 | | 1 | AĞIR SERİ YILDIZ DİŞLİ SEKMANI | RETAINING RING | | | ♦ | ♦ | | |
| 24 | K21.03306 | 947 262 0634 | | 1 | SERİ SENKROMENÇ | ENGAGING RING | | | ♦ | ♦ | | |
| 25 | K21.03307 | 947 264 0420 | | 1 | RETARDER DİŞLİSİ 59 DİŞ | RETARDER GEAR 59 T. | | | ♦ | ♦ | | |
| 26 | K21.03431 | 960 265 0049 | (947 265 0349) | 2 | AĞIR SERİ HİLAL PABUCU | SLIDING PAD | | | ♦ | ♦ | | |
| | | | (389 265 2749) | | | | | | | | | |
| 27 | K21.06324 | 947 265 1901 | (947 265 0901) | 1 | AĞIR SERİ HİLALİ | SHIFTING FORK | | | ♦ | ♦ | | |
| 28 | K21.03523 | 000 267 0197 | (000 267 0397) | 1 | AĞIR SERİ HİLAL MİL KEÇESİ | OIL SEAL | 22X32X8mm | | ♦ | ♦ | | |
| 29 | K21.04178 | 387 267 0650 | (387 267 0250) | 1 | AĞIR SERİ HİLAL MİL BURCU | BUSHING | 34x22x8mm | | ♦ | ♦ | | |
| 30 | | 945 267 2117 | (389 267 7317) | 1 | AĞIR SERİ HİLAL MİLİ | SHIFTING ROD | | | ♦ | ♦ | | |
| 30 | K21.06492 | 930 267 0217 | (945 267 2217) | 1 | AĞIR SERİ HİLAL MİLİ | SHIFTING ROD | | | ♦ | ♦ | | |
| 30 | | 960 267 2917 | | 1 | AĞIR SERİ HİLAL MİLİ | SHIFTING ROD | | | ♦ | ♦ | | |
| 31 | K21.06499 | 930 267 0618 | | 1 | AĞIR SERİ HİLAL MİL PİSTONU | PISTON | | | ♦ | ♦ | | |
| 32 | K21.03525 | 024 997 8347 | (020 997 6747) | 1 | AĞIR SERİ SİLİNDİR KEÇESİ | SEAL RING | 77X90X17mm | | ♦ | ♦ | | |
| | | | (014 997 3647) | | | | | | | | | |
| | | | (014 997 5147) | | | | | | | | | |
| 33 | K21.04255 | 008 993 0801 | (000 993 6705) | 1 | OKUYUCU MİL YAYI | SPRING | 9,7x7,7x8,1mm | | ♦ | ♦ | | |
| 34 | K21.04257 | 000 543 5785 | | 1 | OKUYUCU MİLİ | MAGNETIC PISTON | | | ♦ | ♦ | | |
| 35 | K21.07049 | 960 543 0285 | | Kit | OKUYUCU MİL-YAY TAKIMI | REPAIR KIT | | | ♦ | ♦ | | |
| 36 | K21.06399 | 013 997 7548 | | 1 | AĞIR SERİ SİLİNDİR ORİNGİ | O-RING | 89,5X3mm | | ♦ | ♦ | | |
| 37 | K21.06636 | 015 997 4048 | (020 997 8748) | 1 | AĞIR SERİ SİLİNDİR ORİNGİ | O-RING | 5X3mm | | ♦ | ♦ | | |
| 38 | K21.06968 | 017 997 6545 | | 1 | AĞIR SERİ SİLİNDİR ORİNGİ | O-RING | 96X1,5mm | | ♦ | ♦ | | |
| 39 | | 002 260 9563 | | 1 | AĞIR SERİ SİLİNDİRİ | SHIFT CYLINDER | | | ♦ | ♦ | | |

NOTES :
Parts coded with numbers are used together.

NOTLAR :
Rakamlar ile kodlanan parçalar birlikte kullanılır.





Original parts names, oem numbers, symbols and descriptions used in this catalogue are for reference purposes only.

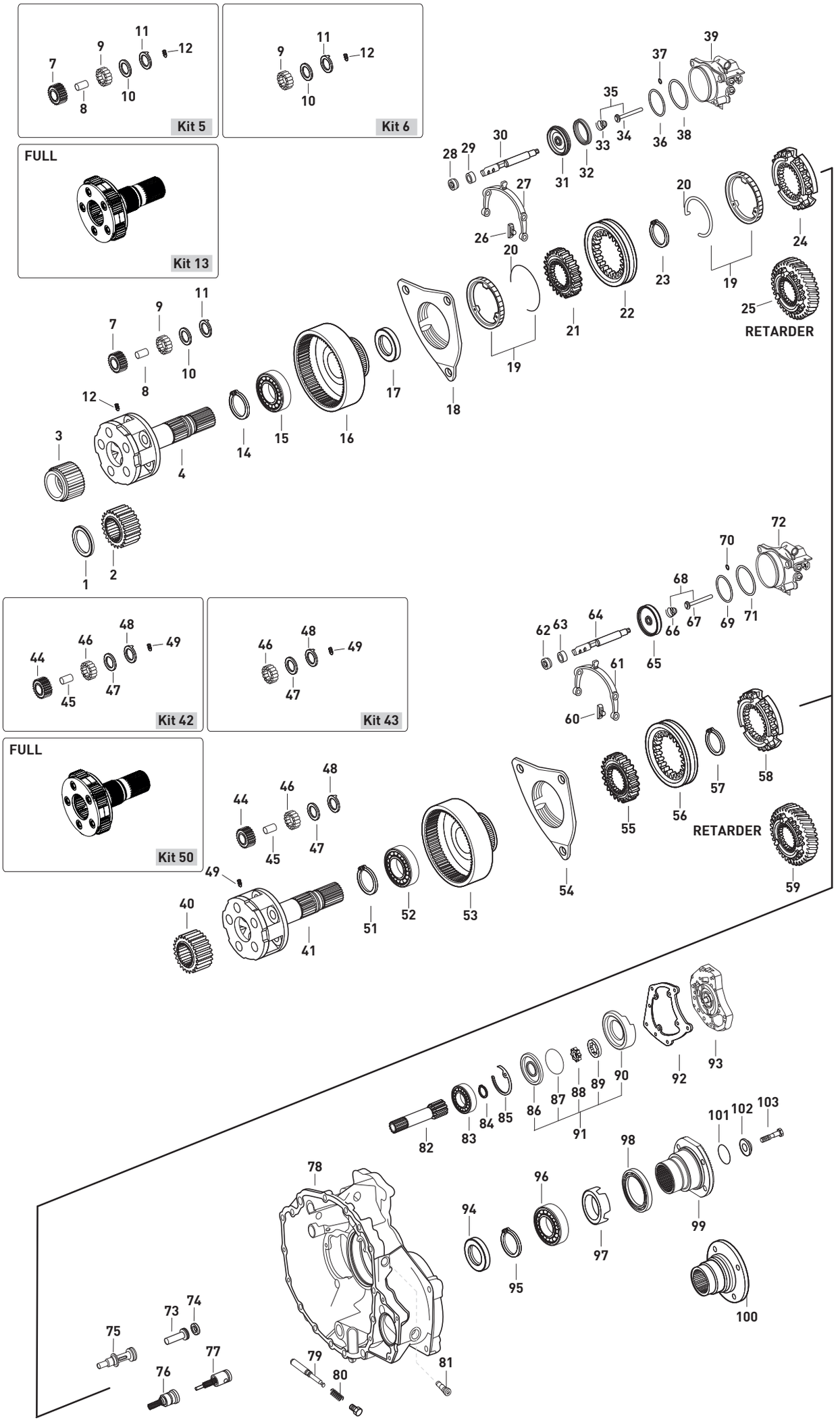






Original parts names, oem numbers, symbols and descriptions used in this catalogue are for reference purposes only.

| Fig. | Kacmaz No | Oem No | Oem Old No | Pcs. | Ürün Tanımı | Description | Sizes | Not | 715360 | 715361 | 715364 | 715366 |
|---|---|---|---|---|---|---|---|---|---|---|---|---|
| 39 | | 003 260 5663 | (003 260 3963) | 1 | AĞIR SERİ SİLİNDİRİ | SHIFT CYLINDER | | | ♦ | | | |
| | | | (003 260 4063) | | | | | | | | | |
| 40 | K21.03294 | 947 262 1209 | | 1 | GÜNEŞ DİŞLİ 25 DİŞ | SUN GEAR 25 T. | | | ♦ | | ♦ | ♦ |
| 41 | K21.06905 | 947 260 9661 | (947 260 9561) | 1 | ŞANZIMAN HEYKELİ (BOŞ) | PLANETARY CARRIER (EMPTY) | | | ♦ | | ♦ | ♦ |
| 42 | K21.06714 | 947 260 0397 | | 1 | HEYKEL KOZA DİŞLİ TAKIMI | PLANETARY GEAR SET | | | ♦ | | ♦ | ♦ |
| 43 | K21.03663 | | | Kit | HEYKEL BİLYA VE PUL TAKIMI | WASHER KIT | | | ♦ | | ♦ | ♦ |
| 44 | K21.06974 | | | 5 | HEYKEL KOZA DİŞLİ 28 DİŞ | PLANETARY GEAR 28 T. | | | ♦ | | ♦ | ♦ |
| 45 | K21.06349 | | | 5 | HEYKEL KOZA DİŞLİ PİMİ | PLANETARY PIN | | | ♦ | | ♦ | ♦ |
| 46 | K21.03816 | 000 981 4186 | (000 981 4386) | 125 | HEYKEL KOZA DİŞLİ TANE BİLYA | NEEDLE ROLLER | D5X39,6 | | ♦ | | ♦ | ♦ |
| 47 | K21.04074 | 389 262 0162 | (389 262 6462) | 10 | HEYKEL KOZA DİŞLİ PULU | THRUST WASHER | | | ♦ | | ♦ | ♦ |
| | | | (389 262 0562) | | | | | | | | | |
| 48 | K21.04075 | 945 262 1162 | (945 262 0162) | 10 | HEYKEL KOZA DİŞLİ PULU | THRUST WASHER | | | ♦ | | ♦ | ♦ |
| | | | (389 262 1462) | | | | | | | | | |
| | | | (389 262 1362) | | | | | | | | | |
| | | | (389 262 1162) | | | | | | | | | |
| 49 | K21.03418 | 000914 006109 | | 5 | HEYKEL KOZA DİŞLİ VİDASI | THREADED PIN | M6X14 | | ♦ | | ♦ | ♦ |
| 50 | K21.06972 | | | Kit | ŞANZIMAN HEYKELİ (DOLU) | PLANETARY CARRIER (FULL) | | | ♦ | | ♦ | ♦ |
| 51 | K21.06864 | 000472 130000 | | 1 | ÇEMBER DİŞLİ BİLYA SEKMANI | RETAINING RING | 130X4mm | | ♦ | | ♦ | ♦ |
| 52 | K21.03614 | 008 981 1325 | (004 981 8725) | 1 | ÇEMBER DİŞLİ BİLYASI | ROLLER BEARING | 90X130X14mm | | ♦ | | ♦ | ♦ |
| | | | (004 981 8825) | | | | | | | | | |
| | | | (004 981 9425) | | | | | | | | | |
| 53 | K21.03471 | 947 262 2808 | (947 262 2508) | 1 | ÇEMBER DİŞLİ 85 DİŞ | CROWN GEAR 85 T. | | | ♦ | | ♦ | ♦ |
| | | | (947 262 2408) | | | | | | | | | |
| 54 | K21.06593 | 960 260 2236 | | 1 | TABLA SENKROMENÇ | FOLLOWER RING | | | ♦ | | ♦ | ♦ |
| 55 | K21.03079 | 389 262 4935 | (389 262 2035) | 1 | AĞIR SERİ YILDIZ DİŞLİ 73 DİŞ | SYNCHRONIZER HUB 73 T. | | | ♦ | | ♦ | ♦ |
| | | | (400 262 0335) | | | | | | | | | |
| 56 | K21.06594 | 960 262 1323 | | 1 | AĞIR SERİ HALKA | ENGAGING SLEEVE | | | ♦ | | ♦ | ♦ |
| 57 | K21.04356 | 000471 120000 | | 1 | AĞIR SERİ YILDIZ DİŞLİ SEKMANI | RETAINING RING | | | ♦ | | ♦ | ♦ |
| 58 | K21.06535 | 960 262 2734 | | 1 | SERİ SENKROMENÇ | ENGAGING RING | | | ♦ | | ♦ | ♦ |
| 59 | | 960 260 2620 | | 1 | RETARDER DİŞLİSİ | RETARDER GEAR | | | ♦ | | ♦ | ♦ |
| 60 | K21.03431 | 960 265 0049 | (947 265 0349) | 2 | AĞIR SERİ HİLAL PABUCU | SLIDING PAD | | | ♦ | | ♦ | ♦ |
| | | | (389 265 2749) | | | | | | | | | |
| 61 | K21.06324 | 947 265 1901 | (947 265 0901) | 1 | AĞIR SERİ HİLALİ | SHIFTING FORK | | | ♦ | | ♦ | ♦ |
| 62 | K21.03523 | 000 267 0197 | (000 267 0397) | 1 | AĞIR SERİ HİLAL MİL KEÇESİ | OIL SEAL | 22X32X8mm | | ♦ | | ♦ | ♦ |
| 63 | K21.04178 | 387 267 0650 | (387 267 0250) | 1 | AĞIR SERİ HİLAL MİL BURCU | BUSHING | 34x22x8mm | | ♦ | | ♦ | ♦ |
| 64 | | 960 267 2917 | | 1 | AĞIR SERİ HİLAL MİLİ | SHIFTING ROD | | | ♦ | | ♦ | ♦ |
| 64 | K21.06496 | 960 267 4817 | (960 267 0617) | 1 | AĞIR SERİ HİLAL MİLİ | SHIFTING ROD | | | ♦ | | ♦ | ♦ |
| | | | (960 267 0017) | | | | | | | | | |
| 64 | K21.06966 | 960 267 5117 | (960 267 3017) | 1 | AĞIR SERİ HİLAL MİLİ | SHIFTING ROD | | | ♦ | | ♦ | ♦ |
| 65 | K21.06497 | 960 267 0118 | | 1 | AĞIR SERİ HİLAL MİL PİSTONU | PISTON | tire sticked | | ♦ | | ♦ | ♦ |
| 66 | K21.04255 | 008 993 0801 | (000 993 6705) | 1 | OKUYUCU MİL YAYI | SPRING | 9,7x7,7x8,1mm | | ♦ | | ♦ | ♦ |
| 67 | K21.04257 | 000 543 5785 | | 1 | OKUYUCU MİLİ | MAGNETIC PISTON | | | ♦ | | ♦ | ♦ |
| 68 | K21.07049 | 960 543 0285 | | Kit | OKUYUCU MİL-YAY TAKIMI | REPAIR KIT | | | ♦ | | ♦ | ♦ |
| 69 | K21.06399 | 013 997 7548 | | 1 | AĞIR SERİ SİLİNDİR ORİNGİ | O-RING | 89,5X3mm | | ♦ | | ♦ | ♦ |
| 70 | K21.06636 | 015 997 4048 | (020 997 8748) | 1 | AĞIR SERİ SİLİNDİR ORİNGİ | O-RING | 5X3mm | | ♦ | | ♦ | ♦ |
| 71 | K21.06968 | 017 997 6545 | | 1 | AĞIR SERİ SİLİNDİR ORİNGİ | O-RING | 96X1,5mm | | ♦ | | ♦ | ♦ |
| 72 | | 003 260 5663 | (003 260 3963) | 1 | AĞIR SERİ SİLİNDİRİ | SHIFT CYLINDER | | | ♦ | | ♦ | ♦ |
| | | | (003 260 4063) | | | | | | | | | |
| 73 | K21.06979 | 389 265 0176 | (389 265 0076) | 1 | YAĞ BASINÇ VALFİ ALIN FİBERİ | WASHER | | | ♦ | ♦ | ♦ | ♦ |
| 74 | K21.04212 | 013 997 0048 | (020 997 8248) | 1 | YAĞ BASINÇ VALF ORİNGİ | O-RING | 19,2X3mm | | ♦ | ♦ | ♦ | ♦ |
| 75 | | 960 260 3257 | (960 260 1157) | 1 | YAĞ BASINÇ VALFİ ALIN FİBERİ | WASHER | | | ♦ | ♦ | ♦ | ♦ |
| 76 | K21.06953 | 960 260 1057 | | Kit | YAĞ BASINÇ VALFİ KOMPLE | VALVE KIT | | | ♦ | ♦ | ♦ | ♦ |
| 76 | K21.06988 | 960 260 2257 | | Kit | YAĞ BASINÇ VALFİ KOMPLE | VALVE KIT | | | ♦ | ♦ | ♦ | ♦ |

NOTES :
Parts coded with numbers are used together.

NOTLAR :
Rakamlar ile kodlanan parçalar birlikte kullanılır.





Original parts names, oem numbers, symbols and descriptions used in this catalogue are for reference purposes only.

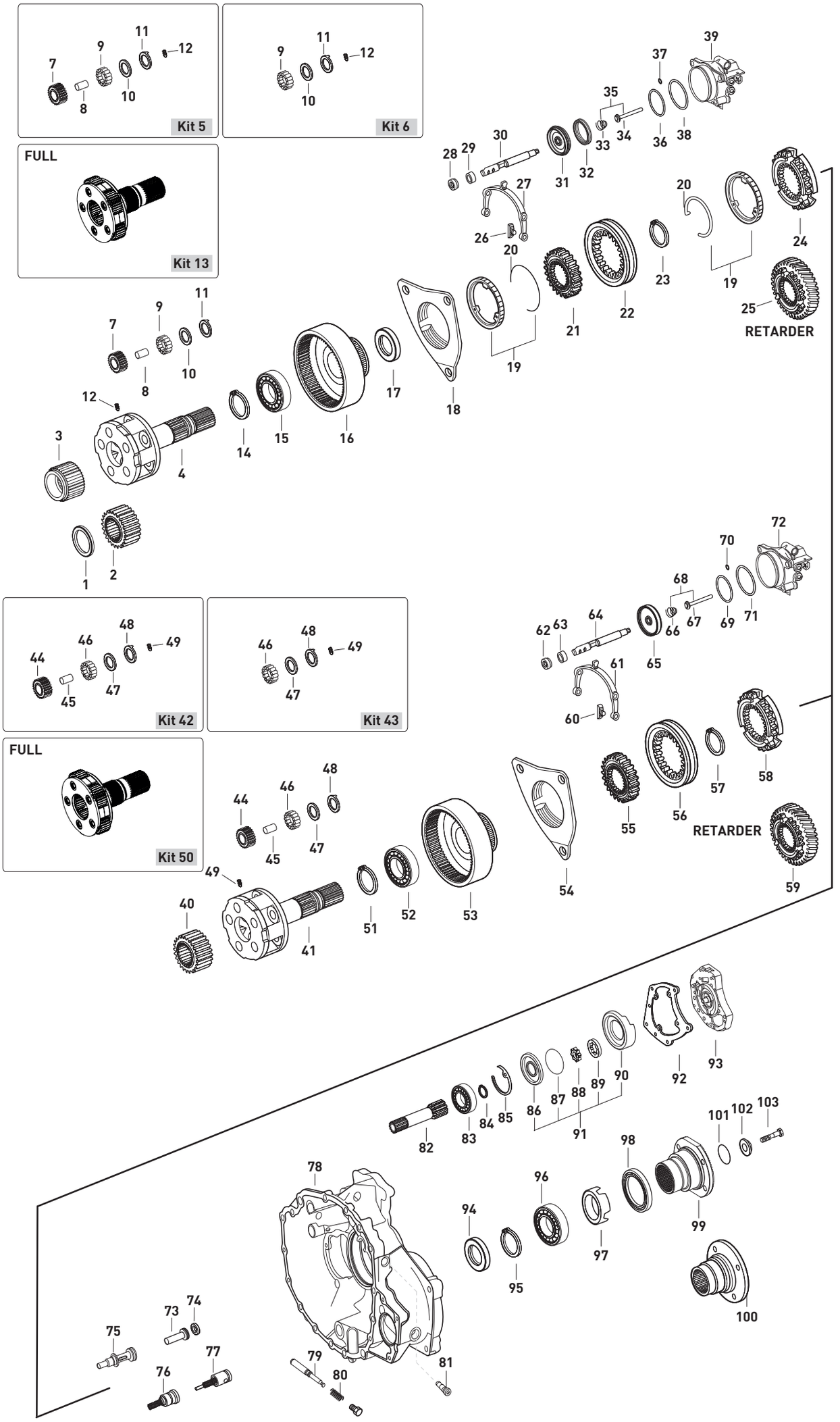






Original parts names, oem numbers, symbols and descriptions used in this catalogue are for reference purposes only.

| Fig. | Kacmaz No | Oem No | Oem Old No | Pcs. | Ürün Tanımı | Description | Sizes | Not | 715360 | 715361 | 715364 | 715366 |
|---|---|---|---|---|---|---|---|---|---|---|---|---|
| 77 | K21.06973 | 960 260 1257 | | Kit | YAĞ BASINÇ VALFİ KOMPLE | VALVE KIT | | | ♦ | ♦ | ♦ | ♦ |
| 77 | K21.06989 | 960 260 2157 | (960 260 3757) | Kit | YAĞ BASINÇ VALFİ KOMPLE | VALVE KIT | | | ♦ | ♦ | ♦ | ♦ |
| 78 | | 960 260 0212 | | 1 | ŞANZIMAN ARKA GÖVDE | HOUSING | | | ♦ | | | ♦ |
| 78 | | 960 260 5023 | | 1 | ŞANZIMAN ARKA GÖVDE | HOUSING | | | ♦ | | | |
| 78 | | 960 260 3723 | | 1 | ŞANZIMAN ARKA GÖVDE | HOUSING | | | ♦ | | ♦ | |
| 79 | K21.06004 | 945 267 0274 | (389 267 0274) | 1 | AĞIR SERİ KİLİTLEME MİLİ | PIN | | | ♦ | ♦ | ♦ | ♦ |
| 80 | K21.06006 | 389 993 3401 | (389 993 0601) | 1 | AĞIR SERİ KİLİTLEME YAYI | SPRING | | | ♦ | ♦ | ♦ | ♦ |
| 81 | K21.04307 | 960 265 0774 | (945 265 1274) | 2 | HİLAL CİVATASI | PIN | | | ♦ | ♦ | ♦ | ♦ |
| | | | (945 265 2774) | | | | | | | | | |
| | | | (945 265 2974) | | | | | | | | | |
| 82 | K21.03198 | 947 269 1010 | (945 269 1010) | 1 | YAĞ POMPA MİLİ | OIL PUMP SHAFT | | | ♦ | ♦ | ♦ | ♦ |
| 82 | K21.06298 | 947 269 1110 | (945 269 1110) | 1 | YAĞ POMPA MİLİ | OIL PUMP SHAFT | | | ♦ | ♦ | | ♦ |
| 83 | K21.03648 | 010 981 9025 | (010 981 8425) | 1 | PTO MİL BİLYASI | ROLLER BEARING | 17X35X10mm | | ♦ | ♦ | ♦ | ♦ |
| | | | (008 981 5425) | | | | | | | | | |
| | | | (008 981 3425) | | | | | | | | | |
| | | | (400 981 2525) | | | | | | | | | |
| 84 | | 912009 045100 | | 1 | YAĞ POMPA EMNİYET SEKMANI | RETAINING RING | | | ♦ | ♦ | ♦ | ♦ |
| 85 | K21.94304 | | | 1 | YAĞ POMPA PULU | SPACER WASHER | 0,70mm | | ♦ | ♦ | ♦ | ♦ |
| 85 | K21.04304 | 389 262 6254 | | 1 | YAĞ POMPA PULU | SPACER WASHER | 0,80mm | | ♦ | ♦ | ♦ | ♦ |
| 85 | K21.04303 | 389 262 5954 | | 1 | YAĞ POMPA PULU | SPACER WASHER | 0,90mm | | ♦ | ♦ | ♦ | ♦ |
| 85 | K21.04302 | 389 262 5754 | | 1 | YAĞ POMPA PULU | SPACER WASHER | 1,00mm | | ♦ | ♦ | ♦ | ♦ |
| 85 | K21.04301 | 389 262 5554 | | 1 | YAĞ POMPA PULU | SPACER WASHER | 1,10mm | | ♦ | ♦ | ♦ | ♦ |
| 85 | K21.04305 | 389 262 5354 | | 1 | YAĞ POMPA PULU | SPACER WASHER | 1,20mm | | ♦ | ♦ | ♦ | ♦ |
| 86 | K21.03412 | 945 269 0201 | (389 269 2501) | 1 | YAĞ POMPA KAPAĞI | OIL PUMP COVER | | | ♦ | ♦ | ♦ | ♦ |
| 87 | K21.03511 | 029 997 5748 | | 1 | YAĞ POMPA ORİNGİ | O-RING | 112X2,5mm | | ♦ | ♦ | ♦ | ♦ |
| 88 | K21.03413 | 389 269 1406 | (389 269 1506) | 1 | YAĞ POMPA İÇ ROTOR | OIL PUMP GEAR | | | ♦ | ♦ | ♦ | ♦ |
| | | | (945 260 0090) | | | | | | | | | |
| 89 | K21.03414 | 389 269 0706 | (389 269 1206) | 1 | YAĞ POMPA DIŞ ROTOR | ROTOR | | | ♦ | ♦ | ♦ | ♦ |
| 90 | K21.03478 | 947 269 1001 | | 1 | YAĞ POMPA GÖVDESİ | OIL PUMP HOUSİNG | | | ♦ | ♦ | ♦ | ♦ |
| 91 | K21.03475 | 389 260 0790 | | 1 | YAĞ POMPASI | OIL PUMP | | | ♦ | ♦ | ♦ | ♦ |
| 92 | K21.03667 | 945 261 0680 | (945 261 0580) | 1 | PTO KAPAK CONTASI | GASKET | | | ♦ | ♦ | ♦ | ♦ |
| | | | (945 261 0080) | | | | | | | | | |
| 93 | K21.03566 | 945 261 1033 | (945 261 1433) | 1 | PTO KAPAĞI | COVER | | | ♦ | ♦ | ♦ | ♦ |
| | | | (400 261 1133) | | | | | | | | | |
| 94 | K21.04136 | 947 262 4052 | | 1 | ŞANZIMAN KM DEVİR SAC PULU | SPACER WASHER | | | ♦ | ♦ | ♦ | ♦ |
| 95 | K21.06864 | 000472 130000 | | 1 | ŞANZIMAN HEYKELİ BİLYA SEKMANI | RETAINING RING | 130X4mm | | ♦ | ♦ | ♦ | ♦ |
| 96 | K21.03639 | 009 981 3325 | (009 981 3425) | 1 | ŞANZIMAN ARKA BİLYA | ROLLER BEARING | 72X130X25mm | | ♦ | ♦ | ♦ | ♦ |
| | | | (009 981 3525) | | | | | | | | | |
| | | | (009 981 3625) | | | | | | | | | |
| 97 | | 947 262 1128 | (947 262 0528) | 1 | ŞANZIMAN KM DEVİR SACI | PULSE STAR | | | ♦ | ♦ | ♦ | ♦ |
| 98 | K21.03515 | 015 997 7746 | (015 997 9546) | 1 | ŞANZIMAN FLANŞ KEÇESİ | OIL SEAL | 86X100X14/18mm | | ♦ | ♦ | ♦ | ♦ |
| | | | (013 997 6546) | | | | | | | | | |
| 99 | K21.03309 | 947 262 1645 | | 1 | ŞANZIMAN FLANŞI | COMPANION FLANGE | 4-H, ÿ180mm | (2) | ♦ | ♦ | | ♦ |
| 99 | K21.07024 | 947 262 2045 | | 1 | ŞANZIMAN FLANŞI | COMPANION FLANGE | 4-H, ÿ180mm | (1) | ♦ | | | ♦ |
| 100 | | 947 260 0117 | | 1 | ŞANZIMAN FLANŞI | COMPANION FLANGE | | | | ♦ | | |
| 101 | | 013 997 2145 | | 1 | ŞANZIMAN FLANŞ ORİNGİ | O-RING | 62,4X5,3mm | | ♦ | ♦ | ♦ | ♦ |
| 102 | K21.06976 | 947 262 0862 | | 1 | ŞANZIMAN FLANŞI ALIN PULU | THRUST WASHER | 87X20mm | (1) | ♦ | ♦ | ♦ | ♦ |
| 102 | K21.04214 | 945 262 0762 | | 1 | ŞANZIMAN FLANŞI ALIN PULU | THRUST WASHER | 93X20mm | (2) | ♦ | ♦ | ♦ | ♦ |
| 103 | K21.06280 | 000000 006750 | (000000 005728) | 1 | ŞANZIMAN HEYKELİ ALIN VİDASI | SCREW | M20X1,5X80mm | | ♦ | ♦ | ♦ | ♦ |

NOTES :
Parts coded with numbers are used together.

NOTLAR :
Rakamlar ile kodlanan parçalar birlikte kullanılır.





Original parts names, oem numbers, symbols and descriptions used in this catalogue are for reference purposes only.

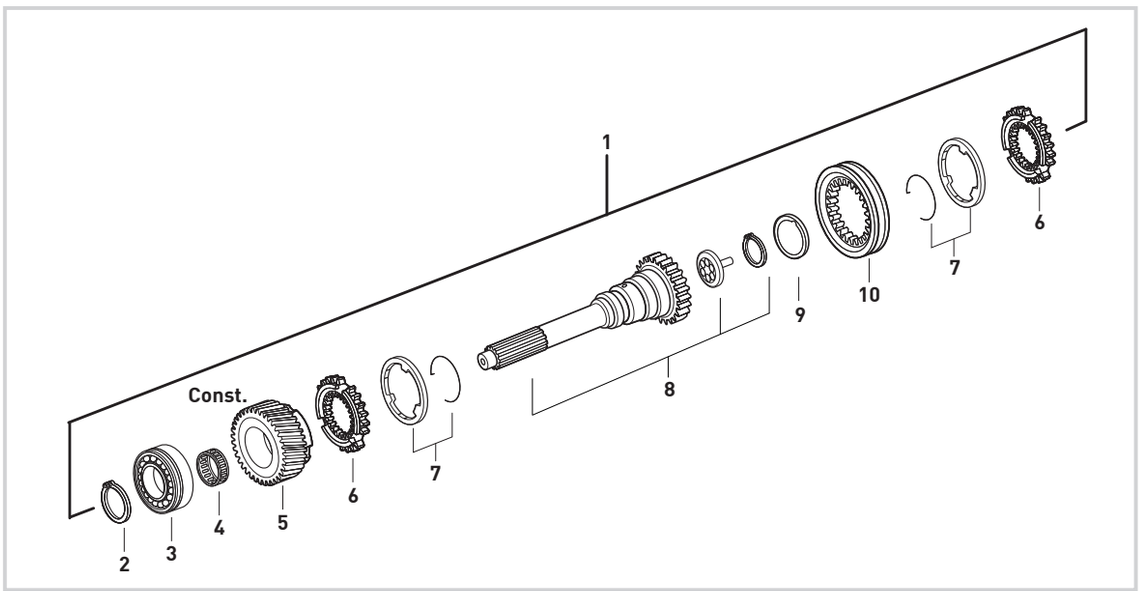


| Fig. | Kacmaz No. | Oem No | Oem Old No | Pcs. | Ürün Tanımı | Description | Sizes |
|---|---|---|---|---|---|---|---|
| 1 | K21.06365 | | | Kit | PRİZDİREK KOMPLE | INPUT SHAFT COMPLETE | |
| 2 | K21.04346 | 387 262 8773 | | 1 | PRİZDİREK ÖN BİLYA SEKMANI | RETAINING RING | 3,20mm |
| 3 | K21.03618 | 011 981 1305 | (014 981 9005) | 1 | PRİZDİREK ÖN BİLYA | ROLLER BEARING | 75X140X34,25mm |
| 4 | K21.03826 | 022 981 2110 | (022 981 2010) | 1 | TAKVİYE MASURA BİLYA | NEEDLE CAGE | 84X90X48mm |
| 5 | K21.06332 | 947 262 1217 | (947 262 3510) | 1 | TAKVİYE DİŞLİSİ 37 DİŞ | CONSTANT GEAR 37 T. | |
| 6 | K21.03147 | 945 262 7734 | (945 262 3634) | 2 | TAKVİYE SENKROMENÇ | ENGAGING RING | |
| 7 | K21.03136 | 945 260 2245 | (946 262 6337) | 2 | TAKVİYE FRENLEME (Mo) | SYNCHRONIZING CONE / Mo | |
| 8 | K21.03275 | 947 262 5602 | (947 262 3902) | 1 | PRİZDİREK 60 DİŞ | INPUT SHAFT 60 T. | |
| | | | (947 262 5002) | | | | |
| | | | (948 262 0902) | | | | |
| | | | (948 262 0702) | | | | |
| 9 | K21.03513 | 001 262 0262 | (000 262 8662) | 1 | PRİZDİREK ARKA KEÇE | OIL SEAL | 73,5X101X7mm |
| 10 | K21.03137 | 945 262 6823 | (945 262 6423) | 1 | TAKVİYE SENKROMENÇ HALKA | ENGAGING SLEEVE | |



**Original parts names, oem numbers, symbols and descriptions used in this catalogue are for reference purposes only.**

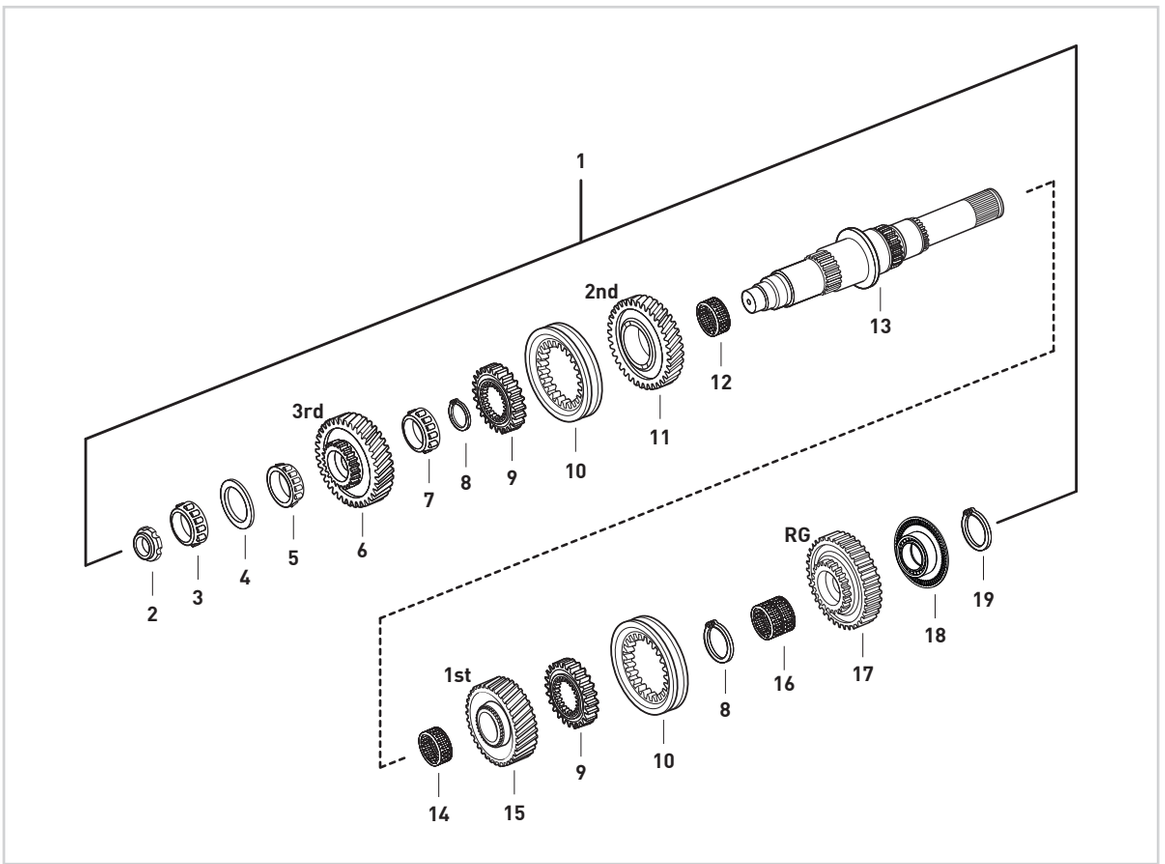


| Fig. | Kacmaz No. | Oem No | Oem Old No | Pcs. | Ürün Tanımı | Description | Sizes |
|---|---|---|---|---|---|---|---|
| 1 | K21.06367 | | | Kit | KAMALI MİL KOMPLE | MAIN SHAFT COMPLETE | |
| 2 | K21.03432 | 945 990 0250 | (945 990 0150) | 1 | KAMALI MİL SOMUNU | NUT | M30X1,5 |
| 3 | K21.03632 | 020 981 5205 | (017 981 1305) | 1 | KAMALI MİL UÇ BİLYA | ROLLER BEARING | 39,69X40,39mm |
| 4 | K21.04095 | 389 262 2155 | | 1 | KAMALI MİL AYAR PULU | THRUST WASHER | 1,73mm |
| 5 | K21.03629 | 015 981 7605 | (015 981 2005) | 1 | 3.VİTES DİŞLİ ÖN BİLYA | ROLLER BEARING | 50X41mm |
| 6 | K21.03465 | 947 262 1517 | (947 262 0117) | 1 | 3.VİTES DİŞLİSİ 34 DİŞ | GEAR 3rd 34 T. | |
| 7 | K21.03636 | 017 981 8305 | | 1 | 3.VİTES DİŞLİSİ ARKA BİLYA | ROLLER BEARING | 52X24mm |
| 8 | K21.04337 | 387 262 0873 | | 2 | 2./3.-GERİ VİT.YILDIZ DİŞLİ SEK. | RETAINING RING | 2,60mm |
| 9 | K21.03280 | 947 262 2635 | (947 262 1435) | 2 | 1./2./3.-GERİ VİTES YILDIZ DİŞLİ | SYNCHRONIZER HUB | |
| 10 | K21.03282 | 947 262 2223 | (947 262 1423) | 2 | 1./2./3.-GERİ VİTES HALKA | ENGAGING SLEEVE | |
| | | | (947 262 1123) | | | | |
| 11 | K21.03466 | 947 262 2712 | (947 262 2412) | 1 | 2.VİTES DİŞLİSİ 38 DİŞ | GEAR 2nd 38 T. | |
| 12 | K21.03817 | 019 981 4410 | (007 981 4210) | 1 | 2.VİTES MASURA BİLYA | NEEDLE CAGE | 75X83X55mm |
| 13 | K21.03467 | 947 262 2505 | (947 262 1705) | 1 | KAMALI MİL | MAIN SHAFT | |
| | | | (947 262 2305) | | | | |
| 14 | K21.03827 | 013 981 1210 | (006 981 6410) | 2 | 1.VİTES MASURA BİLYA | NEEDLE CAGE | 75X83X33mm |
| 15 | K21.03468 | 947 262 5310 | (947 262 5110) | 1 | 1.VİTES DİŞLİSİ 41 DİŞ | GEAR 1st 41 T. | |
| 16 | K21.03828 | 022 981 2310 | (022 981 2210) | 1 | GERİ VİTES MASURA BİLYA | NEEDLE CAGE | 64X72X44,6mm |
| 17 | K21.03470 | 947 262 1933 | (947 262 2533) | 1 | GERİ VİTES DİŞLİSİ 41 DİŞ | REVERSE GEAR 41 T. | |
| 18 | K21.03857 | 002 980 9502 | | 1 | KAMALI MİL ARKA BİLYA | ROLLER BEARING | 55X110X40mm |
| 19 | K21.04331 | 007 994 1841 | (006 994 9941) | 1 | KAMALI MİL ARKA BİLYA SEKMANI | RETAINING RING | 2,50mm |



Original parts names, oem numbers, symbols and descriptions used in this catalogue are for reference purposes only.

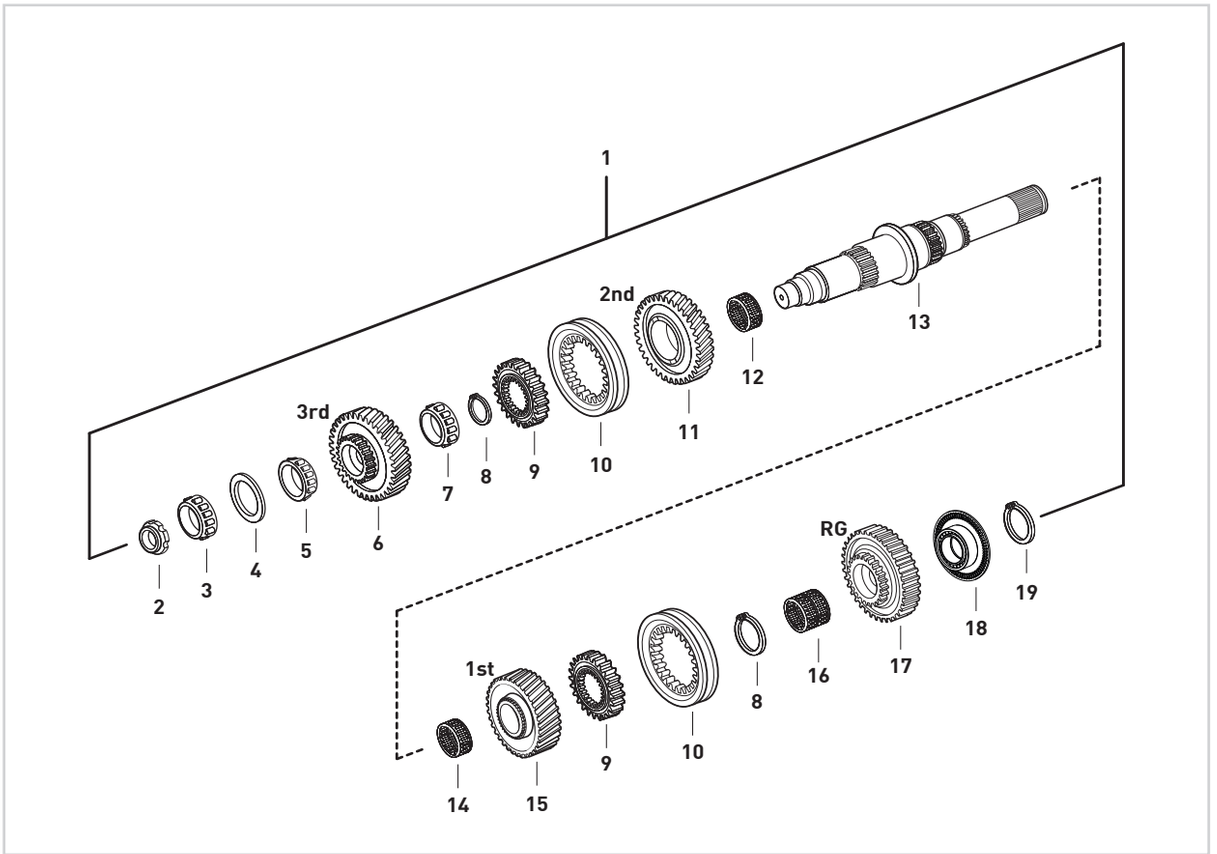


| Fig. | Kacmaz No. | Oem No | Oem Old No | Pcs. | Ürün Tanımı | Description | Sizes |
|---|---|---|---|---|---|---|---|
| 1 | K21.06668 | | | Kit | KAMALI MİL KOMPLE | MAIN SHAFT COMPLETE | |
| 2 | K21.03432 | 945 990 0250 | (945 990 0150) | 1 | KAMALI MİL SOMUNU | NUT | |
| 3 | K21.03632 | 020 981 5205 | (017 981 1305) | 1 | KAMALI MİL UÇ BİLYA | ROLLER BEARING | 39,69X40,39mm |
| 4 | K21.04025 | 389 262 3252 | | 1 | KAMALI MİL AYAR PULU | THRUST WASHER | 2,00 mm |
| 5 | K21.03629 | 015 981 7605 | (015 981 2005) | 1 | 3.VİTES DİŞLİ ÖN BİLYA | ROLLER BEARING | 50X41mm |
| 6 | K21.03465 | 947 262 1517 | (947 262 0117) | 1 | 3.VİTES DİŞLİSİ 34 DİŞ | GEAR 3rd 34 T. | |
| 7 | K21.03636 | 017 981 8305 | | 1 | 3.VİTES DİŞLİSİ ARKA BİLYA | ROLLER BEARING | 52X24mm |
| 8 | K21.06669 | 387 262 7673 | | 2 | 2./3.-GERİ VİT.YILDIZ DİŞLİ SEK. | RETAINING RING | 2,70mm |
| 9 | K21.03280 | 947 262 2635 | (947 262 1435) | 2 | 1./2./3.-GERİ VİTES YILDIZ DİŞLİ | SYNCHRONIZER HUB | |
| 10 | K21.03282 | 947 262 2223 | (947 262 1423) | 2 | 1./2./3.-GERİ VİTES HALKA | ENGAGING SLEEVE | |
| | | | (947 262 1123) | | | | |
| 11 | K21.03466 | 947 262 2712 | (947 262 2412) | 1 | 2.VİTES DİŞLİSİ 38 DİŞ | GEAR 2nd 38 T. | |
| 12 | K21.03817 | 019 981 4410 | (007 981 4210) | 1 | 2.VİTES MASURA BİLYA | NEEDLE CAGE | 75X83X55mm |
| 13 | K21.03467 | 947 262 2505 | (947 262 1705) | 1 | KAMALI MİL | MAIN SHAFT | |
| | | | (947 262 2305) | | | | |
| 14 | K21.03827 | 013 981 1210 | (006 981 6410) | 2 | 1.VİTES MASURA BİLYA | NEEDLE CAGE | 75X83X33mm |
| 15 | K21.03468 | 947 262 5310 | (947 262 5110) | 1 | 1.VİTES DİŞLİSİ 41 DİŞ | GEAR 1st 41 T. | |
| 16 | K21.03828 | 022 981 2310 | (022 981 2210) | 1 | GERİ VİTES MASURA BİLYA | NEEDLE CAGE | 64X72X44,6mm |
| 17 | K21.03470 | 947 262 1933 | (947 262 2533) | 1 | GERİ VİTES DİŞLİSİ 41 DİŞ | REVERSE GEAR 41 T. | |
| 18 | K21.03860 | 003 980 0602 | | 1 | KAMALI MİL ARKA BİLYA | ROLLER BEARING | 55X130X51mm |
| 19 | K21.06670 | 000471 048000 | | 1 | KAMALI MİL ARKA BİLYA SEKMANI | RETAINING RING | 1,75mm |



**Original parts names, oem numbers, symbols and descriptions used in this catalogue are for reference purposes only.**

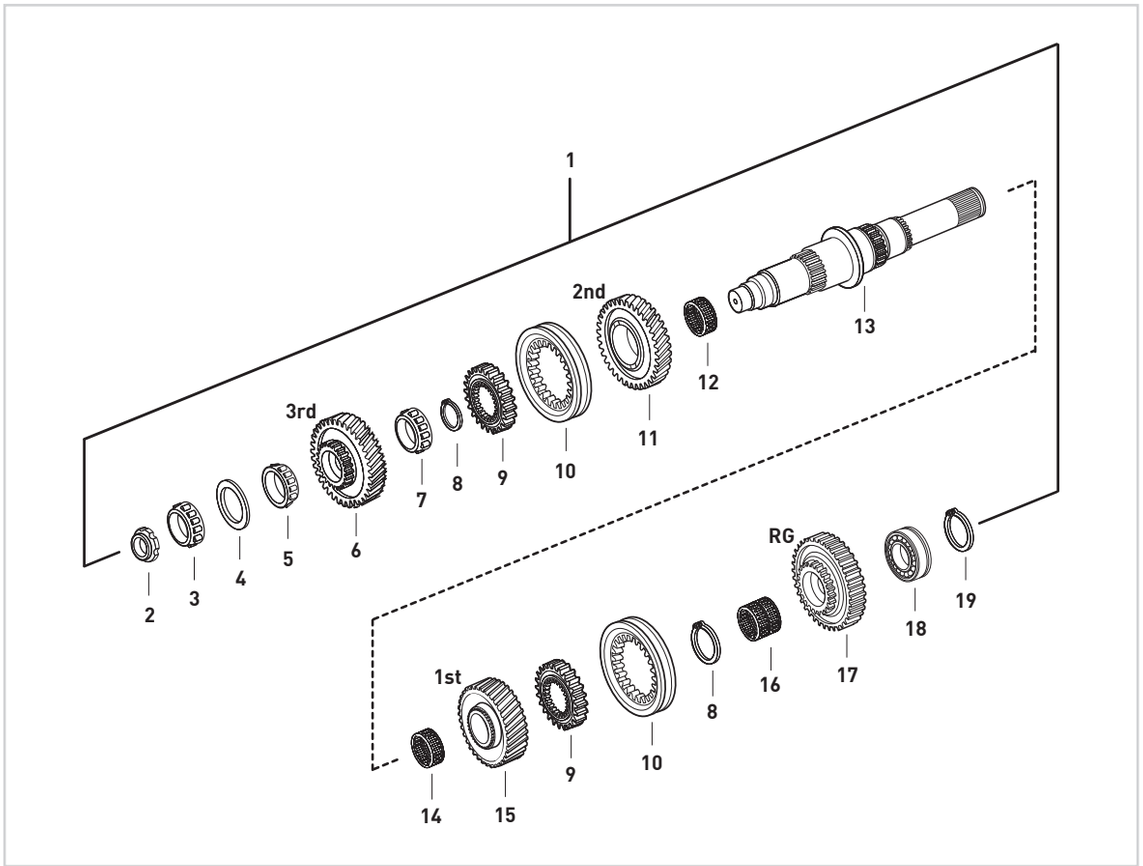


| Fig. | Kacmaz No. | Oem No | Oem Old No | Pcs. | Ürün Tanımı | Description | Sizes |
|---|---|---|---|---|---|---|---|
| 1 | K21.06375 | | | Kit | KAMALI MİL KOMPLE | MAIN SHAFT COMPLETE | |
| 2 | K21.03432 | 945 990 0250 | (945 990 0150) | 1 | KAMALI MİL SOMUNU | NUT | M30X1,5 |
| 3 | K21.03632 | 020 981 5205 | (017 981 1305) | 1 | KAMALI MİL UÇ BİLYA | ROLLER BEARING | 39,69X40,39mm |
| 4 | K21.04025 | 389 262 3252 | | 1 | KAMALI MİL AYAR PULU | THRUST WASHER | 2,00 mm |
| 5 | K21.03629 | 015 981 7605 | (015 981 2005) | 1 | 3.VİTES DİŞLİ ÖN BİLYA | ROLLER BEARING | 50X41mm |
| 6 | K21.03465 | 947 262 1517 | (947 262 0117) | 1 | 3.VİTES DİŞLİSİ 34 DİŞ | GEAR 3rd 34 T. | |
| 7 | K21.03636 | 017 981 8305 | | 1 | 3.VİTES DİŞLİSİ ARKA BİLYA | ROLLER BEARING | 52X24mm |
| 8 | K21.04337 | 387 262 0873 | | 2 | 2./3.-GERİ VİTES YILDIZ DİŞLİ SEK. | RETAINING RING | 2,60mm |
| 9 | K21.03280 | 947 262 2635 | (947 262 1435) | 2 | 1./2./ 3.-GERİ VİTES YILDIZ DİŞLİ | SYNCHRONIZER HUB | |
| 10 | K21.03282 | 947 262 2223 | (947 262 1423) | 2 | 1./2./3.-GERİ VİTES HALKA | ENGAGING SLEEVE | |
| | | | (947 262 1123) | | | | |
| 11 | K21.03466 | 947 262 2712 | (947 262 2412) | 1 | 2.VİTES DİŞLİSİ 38 DİŞ | GEAR 2nd 38 T. | |
| 12 | K21.03817 | 019 981 4410 | (007 981 4210) | 1 | 2.VİTES MASURA BİLYA | NEEDLE CAGE | 75X83X55mm |
| 13 | K21.03467 | 947 262 2505 | (947 262 1705) | 1 | KAMALI MİL | MAIN SHAFT | |
| | | | (947 262 2305) | | | | |
| 14 | K21.03827 | 013 981 1210 | (006 981 6410) | 2 | 1.VİTES MASURA BİLYA | NEEDLE CAGE | 75X83X33mm |
| 15 | K21.03468 | 947 262 5310 | (947 262 5110) | 1 | 1.VİTES DİŞLİSİ 41 DİŞ | GEAR 1st 41 T. | |
| 16 | K21.03828 | 022 981 2310 | (022 981 2210) | 1 | GERİ VİTES MASURA BİLYA | NEEDLE CAGE | 64X72X44,6mm |
| 17 | K21.03470 | 947 262 1933 | (947 262 2533) | 1 | GERİ VİTES DİŞLİSİ 41 DİŞ | REVERSE GEAR 41 T. | |
| 18 | K21.03856 | 018 981 5705 | | 1 | KAMALI MİL ARKA BİLYA | ROLLER BEARING | 55X110X40mm |
| 19 | K21.06670 | 000471 048000 | | 1 | KAMALI MİL ARKA BİLYA SEKMANI | RETAINING RING | |



Original parts names, oem numbers, symbols and descriptions used in this catalogue are for reference purposes only.

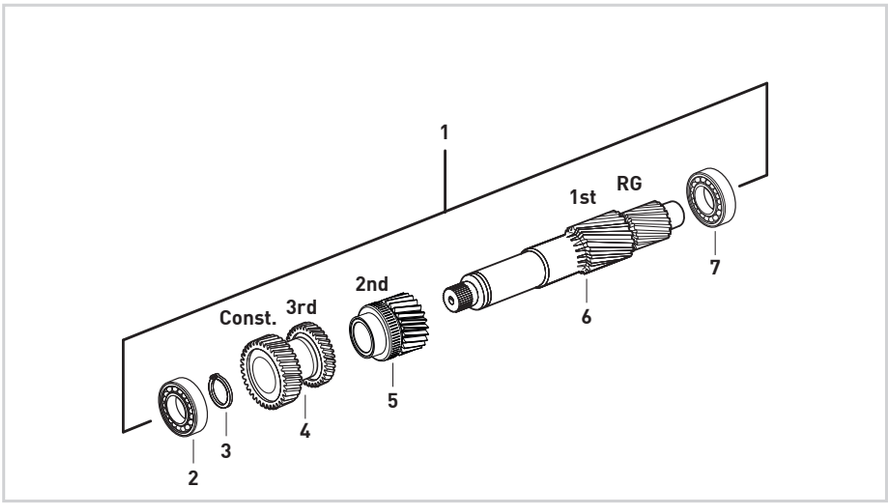


| Fig. | Kacmaz No. | Oem No | Oem Old No | Pcs. | Ürün Tanımı | Description |
|---|---|---|---|---|---|---|
| 1 | K21.06334 | 947 260 4524 | (947 260 2724) | kit | GRUP MİLİ KOMPLE (Devir Sensörlü) | COUNT.SHAFT COMP. (With Speed Sensor) |
| 2 | K21.03606 | 015 981 9005 | (014 981 1405) | 1 | GRUP MİLİ ÖN BİLYA | ROLLER BEARING 50,8X100X35mm |
| 3 | K21.06426 | 900055 060300 | (000 264 5351) | 1 | GRUP MİLİ ÖN BİLYA SEKMANI | RETAINING RING 3,00mm |
| 4 | K21.06333 | 947 263 2110 | | 1 | TAK.VE 3.VİT.DİŞ.KARŞ. 28/34 DİŞ | DOUBLE GEAR Const./3rd 28/34 T. |
| 5 | K21.06393 | 947 260 3519 | | 1 | 2.VİT.DİŞLİ KARŞILIĞI 23 DİŞ (Devir Sensörlü) | GEAR 2nd 23 T (With Speed Sensor) |
| 6 | K21.03302 | 947 263 2402 | | 1 | GRUP MİLİ 15/15/18/16 DİŞ | COUNTER SHAFT 15/15/18/16 T. |
| 7 | K21.03665 | 019 981 6105 | (002 981 7781) | 1 | GRUP MİLİ ARKA BİLYA | ROLLER BEARING 60X110X34mm |

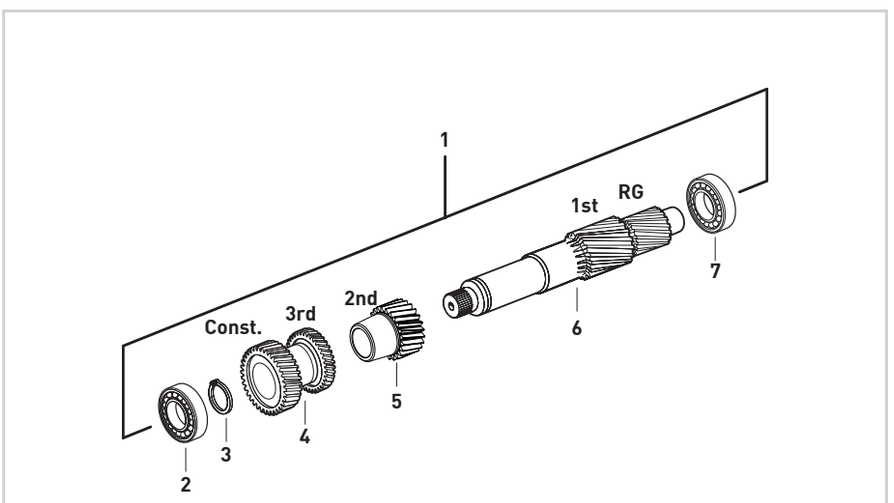


| Fig. | Kacmaz No. | Oem No | Oem Old No | Pcs. | Ürün Tanımı | Description |
|---|---|---|---|---|---|---|
| 1 | K21.06422 | | | Kit | GRUP MİLİ KOMPLE (Devir Sensörsüz) | COUNT.SHAFT COMP. (W/Out Speed Sensor) |
| 2 | K21.03606 | 015 981 9005 | (014 981 1405) | 1 | GRUP MİLİ ÖN BİLYA | ROLLER BEARING 50,8X100X35mm |
| 3 | K21.06426 | 900055 060300 | (000 264 5351) | 1 | GRUP MİLİ ÖN BİLYA SEKMANI | RETAINING RING 3,00mm |
| 4 | K21.06333 | 947 263 2110 | | 1 | TAK.VE 3.VİT.DİŞ.KARŞ. 28/34 DİŞ | DOUBLE GEAR Const./3rd 28/34 T. |
| 5 | K21.03298 | 947 263 0512 | (947 263 0312) | 1 | 2.VİT.DİŞLİ KARŞILIĞI 23 DİŞ (Devir Sensörsüz) | GEAR 2nd 23 T. (W/Out Speed Sensor) |
| | | | (947 263 0212) | | | |
| | | | (947 263 0112) | | | |
| 6 | K21.03302 | 947 263 2402 | | 1 | GRUP MİLİ 15/15/18/16 DİŞ | COUNTER SHAFT 15/15/18/16 T. |
| 7 | K21.03665 | 019 981 6105 | (002 981 7781) | 1 | GRUP MİLİ ARKA BİLYA | ROLLER BEARING 60X110X34mm |



**Original parts names, oem numbers, symbols and descriptions used in this catalogue are for reference purposes only.**

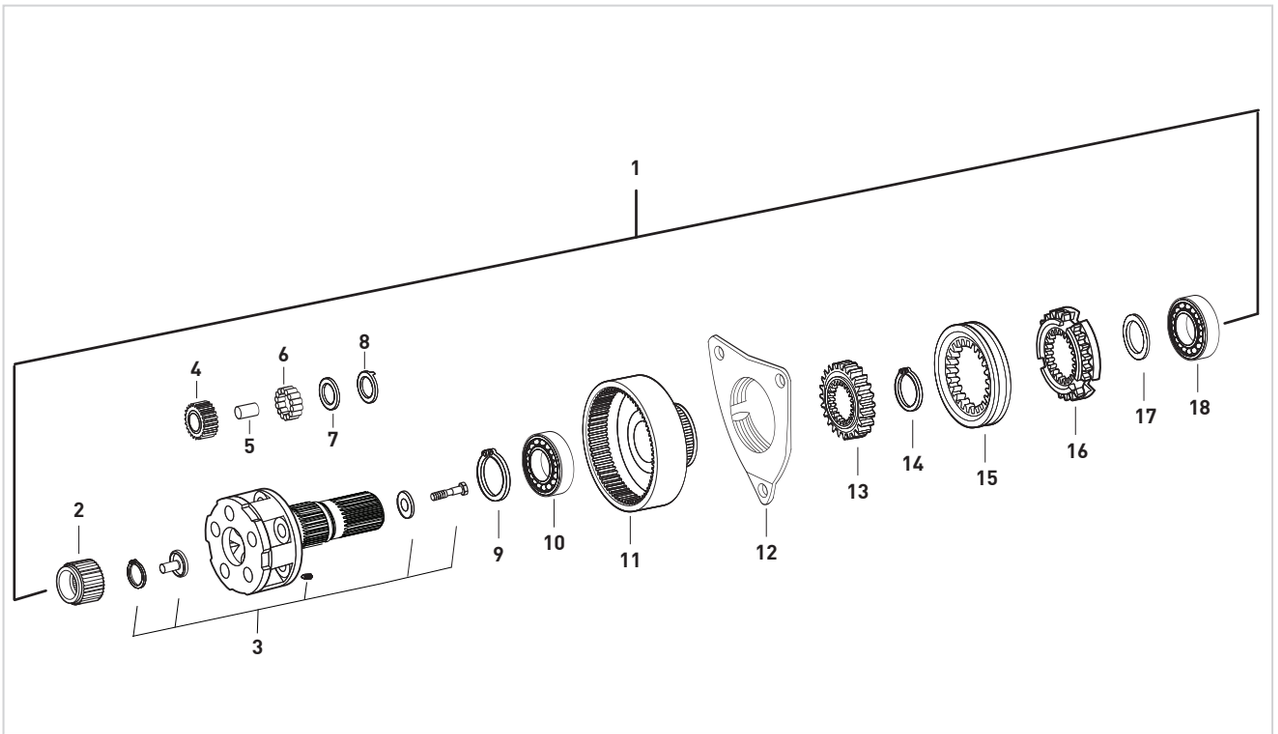


| Fig. | Kacmaz No. | Oem No | Oem Old No | Pcs. | Ürün Tanımı | Description | Sizes |
|---|---|---|---|---|---|---|---|
| 1 | K21.06707 | | | Kit | ŞANZIMAN HEYKELİ KOMPLE | PLANETARY CARRIER COMPLETE | |
| 2 | K21.03294 | 947 262 1209 | | 1 | GÜNEŞ DİŞLİ 25 DİŞ | SUN GEAR 25 T. | |
| 3 | K21.06905 | 947 260 9661 | (947 260 9561) | 1 | ŞANZIMAN HEYKELİ BOŞ | PLANETARY CARRIER EMPTY | |
| 4 | K21.06974 | | | 5 | HEYKEL KOZA DİŞLİSİ 28 DİŞ | PLANETARY GEAR 28 T. | |
| 5 | K21.06349 | | | 5 | HEYKEL KOZA DİŞLİ PİMİ | PLANETARY PIN | |
| 6 | K21.03816 | 000 981 4186 | (000 981 4386) | 125 | HEYKEL KOZA DİŞLİ TANE BİLYA | NEEDLE ROLLER | D5X39,6 |
| 7 | K21.04074 | 389 262 0162 | (389 262 6462) | 10 | HEYKEL KOZA DİŞLİ PULU | THRUST WASHER | |
| 8 | K21.04075 | 945 262 1162 | (945 262 0162) | 10 | HEYKEL KOZA DİŞLİ PULU | THRUST WASHER | |
| 9 | K21.06864 | 000472 130000 | | 1 | ÇEMBER DİŞLİ BİLYA SEKMANI | RETAINING RING | 130X4mm |
| 10 | K21.03614 | 008 981 1325 | (004 981 8725) | 1 | ÇEMBER DİŞLİ BİLYASI | ROLLER BEARING | 90X130X14mm |
| 11 | K21.03471 | 947 262 2808 | (947 262 2508) | 1 | ÇEMBER DİŞLİ 85 DİŞ | CROWN GEAR 85 T. | |
| 12 | K21.06593 | 960 260 2236 | | 1 | TABLA SENKROMENÇ | FOLLOWER RING | |
| 13 | K21.03079 | 389 262 4935 | (389 262 2035) | 1 | AĞIR SERİ YILDIZ DİŞLİ | SYNCHRONIZER HUB | |
| 14 | K21.04356 | 000471 120000 | | 1 | AĞIR SERİ YILDIZ DİŞLİ SEKMANI | RETAINING RING | |
| 15 | K21.06594 | 960 262 1323 | | 1 | AĞIR SERİ HALKA | ENGAGING SLEEVE | |
| 16 | K21.06535 | 960 262 2734 | | 1 | SERİ SENKROMENÇ | ENGAGING RING | |
| 17 | K21.04136 | 947 262 4052 | | 1 | ŞANZIMAN KM DEVİR SAC PULU | SPACER WASHER | |
| 18 | K21.03639 | 009 981 3325 | (009 981 3425) | 1 | ŞANZIMAN ARKA BİLYA | ROLLER BEARING | 72X130X25mm |





Original parts names, oem numbers, symbols and descriptions used in this catalogue are for reference purposes only.

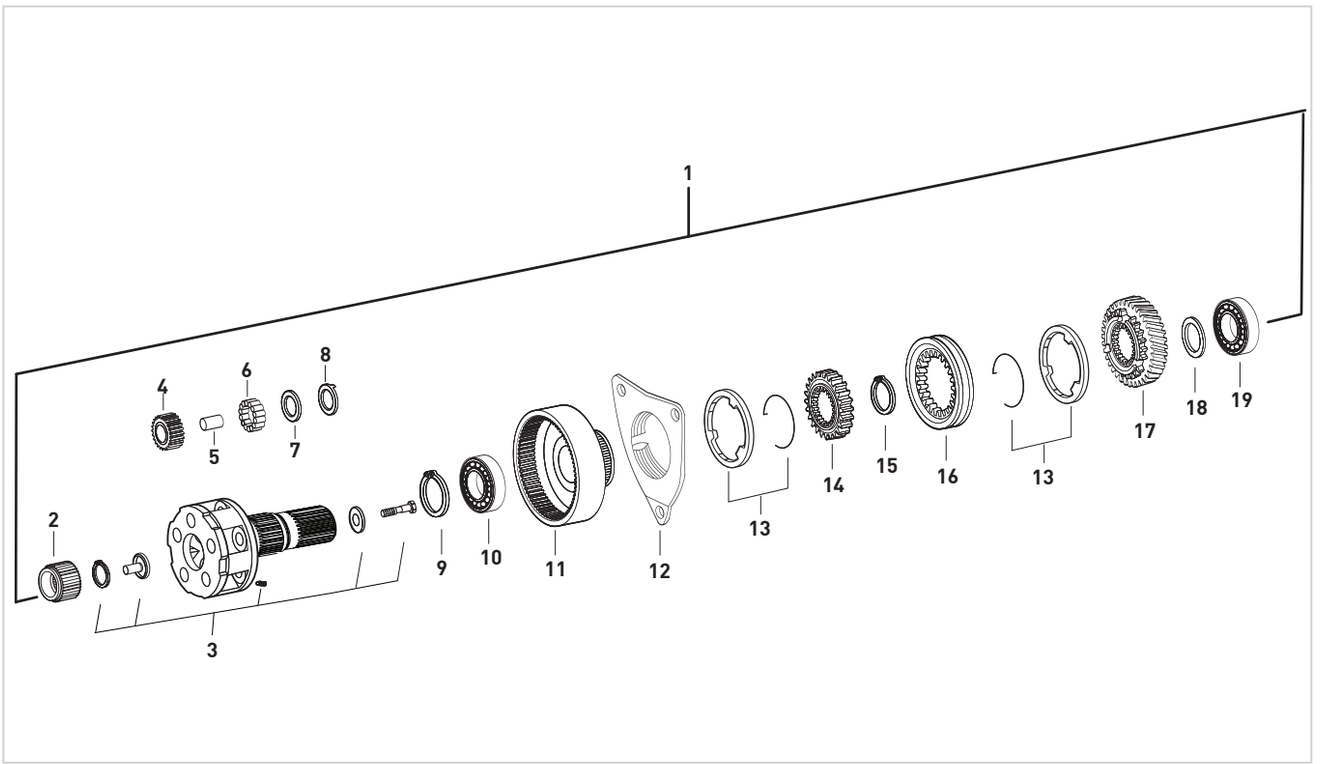


| Fig. | Kacmaz No. | Oem No | Oem Old No | Pcs. | Ürün Tanımı | Description | Sizes |
|---|---|---|---|---|---|---|---|
| 1 | K21.06391 | | | Kit | ŞANZIMAN HEYKELİ KOMPLE | PLANETARY CARRIER COMPLETE | |
| 2 | K21.06306 | 947 262 1609 | | 1 | GÜNEŞ DİŞLİ 25 DİŞ | SUN GEAR 25 T. | |
| 3 | K21.03304 | 947 260 6361 | | 1 | ŞANZIMAN HEYKELİ (BOŞ) | PLANETARY CARRIER (EMPTY) | |
| 4 | K21.06350 | | | 5 | HEYKEL KOZA DİŞLİSİ | PLANETARY GEAR | |
| 5 | K21.06349 | | | 5 | HEYKEL KOZA DİŞLİ PİMİ | PLANETARY PIN | |
| 6 | K21.03821 | | | 125 | HEYKEL KOZA DİŞLİ TANE BİLYA | NEEDLE ROLLER | D5X42,65 |
| 7 | K21.04074 | 389 262 0162 | (389 262 6462) | 10 | HEYKEL KOZA DİŞLİ PULU | THRUST WASHER | |
| 8 | K21.04075 | 945 262 1162 | (945 262 0162) | 10 | HEYKEL KOZA DİŞLİ PULU | THRUST WASHER | |
| 9 | K21.06864 | 000472 130000 | | 1 | ÇEMBER DİŞLİ BİLYA SEKMANI | RETAINING RING | 130X4mm |
| 10 | K21.03614 | 008 981 1325 | (004 981 8725) | 1 | ÇEMBER DİŞLİ BİLYASI | ROLLER BEARING | 90X130X14mm |
| 11 | K21.03471 | 947 262 2808 | (947 262 2508) | 1 | ÇEMBER DİŞLİ 85 DİŞ | CROWN GEAR 85 T. | |
| 12 | K21.03305 | 947 260 0736 | | 1 | TABLA SENKROMENÇ | FOLLOWER RING | |
| 13 | K21.03185 | 947 260 0945 | | 2 | AĞIR SERİ FRENLEME (Mo) | SYNCHRONIZING CONE / Mo | |
| 14 | K21.03079 | 389 262 4935 | (389 262 2035) | 1 | AĞIR SERİ YILDIZ DİŞLİ | GUIDE SLEEVE | |
| 15 | K21.04356 | 000471 120000 | | 1 | AĞIR SERİ YILDIZ DİŞLİ SEKMANI | RETAINING RING | |
| 16 | K21.03033 | 945 262 6923 | (930 262 0623) | 1 | AĞIR SERİ HALKA | ENGAGING SLEEVE | |
| 17 | K21.03307 | 947 264 0420 | | 1 | RETARDER DİŞLİSİ 59 DİŞ | RETARDER GEAR 59 T. | |
| 18 | K21.04136 | 947 262 4052 | | 1 | ŞANZIMAN KM DEVİR SAC PULU | SPACER WASHER | |
| 19 | K21.03639 | 009 981 3325 | (009 981 3425) | 1 | ŞANZIMAN ARKA BİLYA | ROLLER BEARING | 72X130X25mm |





**Original parts names, oem numbers, symbols and descriptions used in this catalogue are for reference purposes only.**

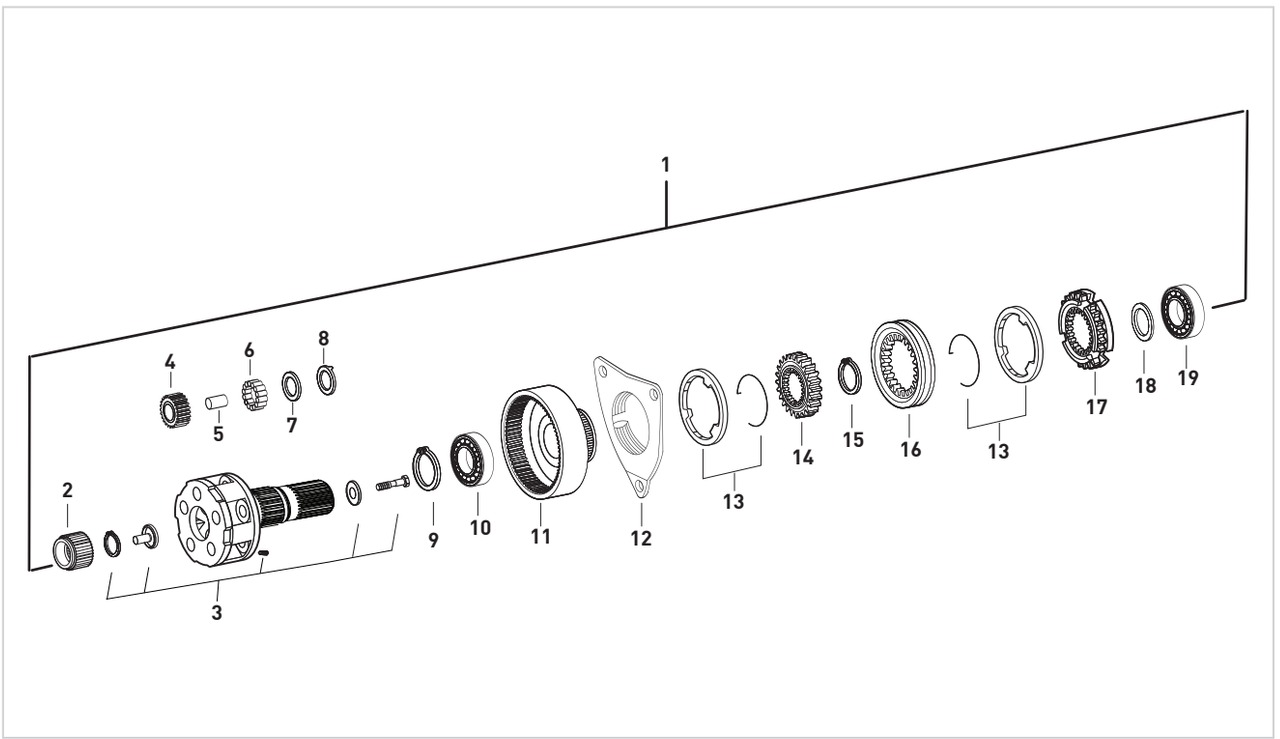


| Fig. | Kacmaz No. | Oem No | Oem Old No | Pcs. | Ürün Tanımı | Description | Sizes |
|---|---|---|---|---|---|---|---|
| 1 | K21.03569 | | | Kit | ŞANZIMAN HEYKELİ KOMPLE | PLANETARY CARRIER COMPLETE | |
| 2 | K21.06306 | 947 262 1609 | | 1 | GÜNEŞ DİŞLİ 25 DİŞ | SUN GEAR 25 T. | |
| 3 | K21.03304 | 947 260 6361 | | 1 | ŞANZIMAN HEYKELİ (BOŞ) | PLANETARY CARRIER (EMPTY) | |
| 4 | K21.06350 | | | 5 | HEYKEL KOZA DİŞLİSİ | PLANETARY GEAR | |
| 5 | K21.06349 | | | 5 | HEYKEL KOZA DİŞLİ PİMİ | PLANETARY PIN | |
| 6 | K21.03821 | | | 125 | HEYKEL KOZA DİŞLİ TANE BİLYA | NEEDLE ROLLER | D5X42,65 |
| 7 | K21.04074 | 389 262 0162 | (389 262 6462) | 10 | HEYKEL KOZA DİŞLİ PULU | THRUST WASHER | |
| 8 | K21.04075 | 945 262 1162 | (945 262 0162) | 10 | HEYKEL KOZA DİŞLİ PULU | THRUST WASHER | |
| 9 | K21.06864 | 000472 130000 | | 1 | ÇEMBER DİŞLİ BİLYA SEKMANI | RETAINING RING | 130X4mm |
| 10 | K21.03614 | 008 981 1325 | (004 981 8725) | 1 | ÇEMBER DİŞLİ BİLYASI | ROLLER BEARING | 90X130X14mm |
| 11 | K21.03471 | 947 262 2808 | (947 262 2508) | 1 | ÇEMBER DİŞLİ 85 DİŞ | CROWN GEAR 85 T. | |
| 12 | K21.03305 | 947 260 0736 | | 1 | TABLA SENKROMENÇ | FOLLOWER RING | |
| 13 | K21.03185 | 947 260 0945 | | 2 | AĞIR SERİ FRENLEME (Mo) | SYNCHRONIZING CONE / Mo | |
| 14 | K21.03079 | 389 262 4935 | (389 262 2035) | 1 | AĞIR SERİ YILDIZ DİŞLİ | GUIDE SLEEVE | |
| 15 | K21.04356 | 000471 120000 | | 1 | AĞIR SERİ YILDIZ DİŞLİ SEKMANI | RETAINING RING | |
| 16 | K21.03033 | 945 262 6923 | (930 262 0623) | 1 | AĞIR SERİ SENK.HALKA | ENGAGING SLEEVE | |
| 17 | K21.03306 | 947 262 0634 | | 1 | SERİ SENKROMENÇ | ENGAGING RING | |
| 18 | K21.04136 | 947 262 4052 | | 1 | ŞANZIMAN KM DEVİR SAC PULU | SPACER WASHER | |
| 19 | K21.03639 | 009 981 3325 | (009 981 3425) | 1 | ŞANZIMAN ARKA BİLYA | ROLLER BEARING | 72X130X25mm |





Original parts names, oem numbers, symbols and descriptions used in this catalogue are for reference purposes only.

P.T.O. (POWER TAKE OFF)

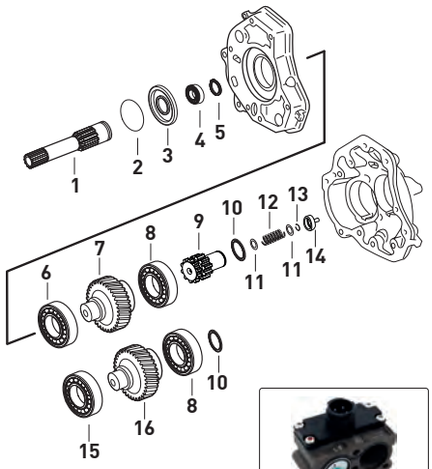





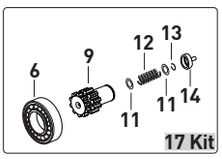


| Fig. | Kacmaz No. | Oem No | Oem Old No | Pcs. | Ürün Tanımı | Description |
|---|---|---|---|---|---|---|
| 1 | K21.03085 | 947 264 0005 | (389 269 0310) | 1 | YAĞ POMPA MİLİ | OIL PUMP SHAFT |
| 1 | K21.03670 | 947 264 0105 | | 1 | YAĞ POMPA MİLİ (RETARDER) | OIL PUMP SHAFT |
| 2 | K21.03511 | 029 997 5748 | | 1 | YAĞ POMPA KAPAK ORİNGİ | O-RING |
| 3 | K21.03558 | 947 264 0287 | | 1 | YAĞ POMPA KAPAĞI | OIL PUMP COVER |
| 4 | K21.03613 | 004 981 9225 | (004 981 8625) | 1 | PTO MİL BİLYASI | ROLLER BEARING |
| 5 | K21.06964 | 000471 045000 | (003 994 3741) | 1 | PTO MİL BİLYA SEKMANI | RETAINING RING |
| 6 | K21.06998 | 017 981 1705 | | 1 | PTO BORU DİŞLİ BİLYASI | ROLLER BEARING |
| 7 | | 947 260 4708 | | 1 | PTO BORU DİŞLİ | GEAR |
| 8 | | 017 981 1805 | | 2 | PTO BORU DİŞLİ BİLYASI | ROLLER BEARING |
| 9 | K21.04334 | 945 264 0006 | | 1 | PTO ARA ADAPTÖR MİLİ | INTERM.SHAFT |
| 10 | | 387 264 3652 | | 2 | BİLYA AYAR RAYNELİ | THRUST WASHER |
| 10 | | 387 264 3752 | | 2 | BİLYA AYAR RAYNELİ | THRUST WASHER |
| 10 | | 387 264 3852 | | 2 | BİLYA AYAR RAYNELİ | THRUST WASHER |
| 11 | | 000988 022010 | | 2 | BİLYA AYAR PULU | THRUST WASHER |
| 12 | K21.04333 | 385 993 5201 | | 1 | YAY | SPRING |
| 13 | | 912009 022100 | | 1 | BİLYA AYAR PUL SEKMANI | RETAINING RING |
| 14 | K21.04332 | 000625 000629 | | 1 | PTO MIL ŞAPKASI | PTO SHAFT CAP |
| 15 | | 016 981 6705 | | 1 | PTO BORU DİŞLİ BİLYASI | ROLLER BEARING |
| 16 | | 947 264 0621 | (947 264 0521) | 1 | PTO BORU DİŞLİ | GEAR |
| 17 | K21.04362 | | | Kit | ARA ADAPTÖR MİLİ KOMPLE | INTERM.SHAFT COMP. |
| 18 | K21.06346 | 970 260 0457 | | Kit | P.T.O VENTİLİ | VALVE |





**Original parts names, oem numbers, symbols and descriptions used in this catalogue are for reference purposes only.**

# NOTES / NOTLAR



Original parts names, oem numbers, symbols and descriptions used in this catalogue are for reference purposes only.

# GEARBOX G 281-12 KL / 14,93 - 1,0

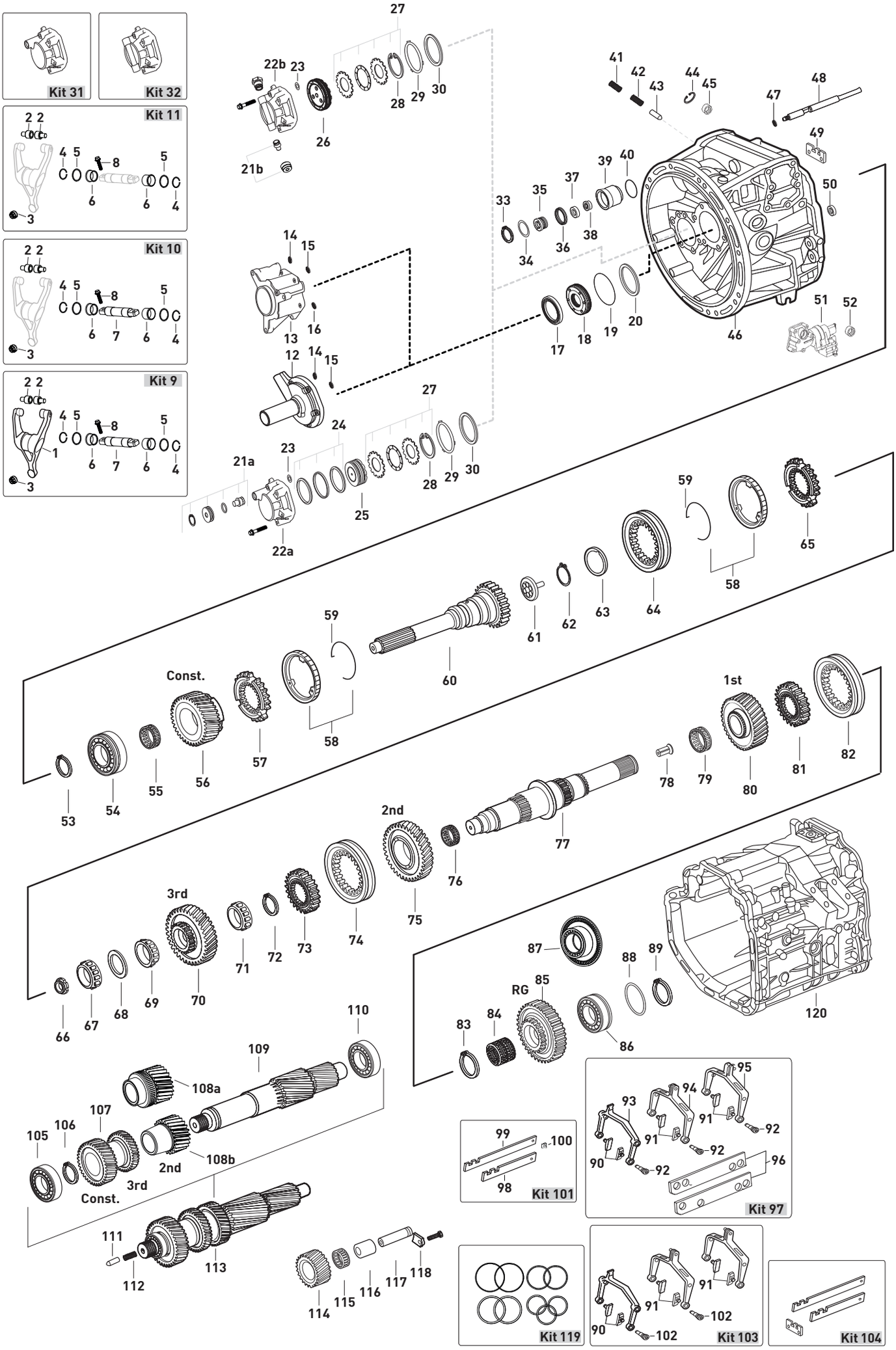




Original parts names, oem numbers, symbols and descriptions used in this catalogue are for reference purposes only.

| Fig. | Kacmaz No | Oem No | Oem Old No | Pcs. | Ürün Tanımı | Description | Sizes | Not | 715370 | 715371 | 715372 | 715374 | 715376 | 715378 | 715379 |
|---|---|---|---|---|---|---|---|---|---|---|---|---|---|---|---|
| 1 | | 655 250 1513 | | 1 | DEBRİYAJ ÇATALI | RELEASE FORK | | | ♦ | | ♦ | | | ♦ | |
| 2 | K21.07038 | 000 254 0017 | | 2 | DEBRİYAJ ÇATAL BURÇ VE PİMİ | CAM ROLLER | | | ♦ | | ♦ | | | ♦ | |
| 3 | K21.07040 | 000 254 0335 | | 1 | DEBRİYAJ ÇATAL PLASTİK BURCU | PLASTIC BUSHING | | | ♦ | | ♦ | | | ♦ | |
| 4 | | 912009 035100 | | 2 | DEBRİYAJ ÇATAL MİL SEKMANI | RETAINING RING | | | ♦ | | ♦ | | | ♦ | |
| 5 | | 000988 036100 | | 2 | DEBRİYAJ ÇATAL MİL AYAR PULU | WASHER | | | ♦ | | ♦ | | | ♦ | |
| 6 | | 002 992 1501 | | 2 | DEBRİYAJ ÇATAL MİL BURCU | BUSHING | 36,5X43X16mm | | ♦ | | ♦ | | | ♦ | |
| 7 | | 655 254 0206 | | 1 | DEBRİYAJ ÇATAL MİLİ | SHAFT | | | ♦ | | ♦ | | | ♦ | |
| 8 | | 910105 012026 | | 2 | DEBRİYAJ ÇATAL MİL VİDASI | SCREW | M12X40mm | | ♦ | | ♦ | | | ♦ | |
| 9 | K21.07036 | 655 250 1813 | | Kit | DEBRİYAJ ÇATALI KOMPLE | RELEASE FORK COMPLETE | | | ♦ | | ♦ | | | ♦ | |
| 9 | K21.97036 | 655 250 1813-S | | Kit | DEB.ÇATALI KOMPLE (BİLYALI TİP) | RELEASE FORK COMPLETE | | WITH BEARING | ♦ | | ♦ | | | ♦ | |
| 10 | K21.07037 | | | Kit | DEBRİYAJ ÇATALI TAMİR TAKIMI | RELEASE FORK REPAIR KIT | | | ♦ | | ♦ | | | ♦ | |
| 11 | K21.07039 | | | Kit | DEBRİYAJ ÇATALI TAMİR TK.MİLSİZ | RELEASE FORK REPAIR KIT | | W/OUT SHAFT | ♦ | | ♦ | | | ♦ | |
| 12 | K21.03429 | 945 261 1118 | (945 261 0118) | 1 | PRİZDİREK KEÇE KAPAĞI | COVER | | | ♦ | | ♦ | | | ♦ | |
| | | | (945 261 0818) | | | | | | | | | | | | |
| 13 | | 960 261 0218 | | 1 | PRİZDİREK KEÇE KAPAĞI | COVER | | | | ♦ | | ♦ | ♦ | | |
| 13 | | 960 261 0518 | | 1 | PRİZDİREK KEÇE KAPAĞI | COVER | | | | ♦ | | ♦ | ♦ | | |
| 13 | | 960 260 4818 | | 1 | PRİZDİREK KEÇE KAPAĞI | COVER | | | | | | | | | ♦ |
| 14 | K21.06637 | 019 997 8348 | (020 997 7948) | 1 | PRİZDİREK KEÇE KAPAK ORİNGİ | O-RING | 14X4mm | | ♦ | ♦ | ♦ | ♦ | ♦ | ♦ | ♦ |
| 15 | K21.06636 | 015 997 4048 | (020 997 8748) | 1 | PRİZDİREK KEÇE KAPAK ORİNGİ | O-RING | 5X3mm | | ♦ | ♦ | ♦ | ♦ | ♦ | ♦ | ♦ |
| 16 | | 023 997 7748 | | 1 | PRİZDİREK KEÇE KAPAK ORİNGİ | O-RING | 13,1X2mm | | | ♦ | | ♦ | ♦ | | ♦ |
| 17 | K21.03509 | 019 997 0547 | (023 997 7847) | 1 | PRİZDİREK KEÇESİ | OIL SEAL | 56X72X8mm | | ♦ | ♦ | ♦ | ♦ | ♦ | ♦ | ♦ |
| | | | (019 997 0647) | | | | | | | | | | | | |
| | | | (022 997 8547) | | | | | | | | | | | | |
| 18 | K21.06038 | 389 261 0665 | (389 261 0765) | 1 | YAĞ TUTUCU DİSK | OIL BAFFLE | 75X16mm | | ♦ | ♦ | ♦ | ♦ | ♦ | ♦ | ♦ |
| | | | (389 261 0865) | | | | | | | | | | | | |
| 19 | K21.06635 | 020 997 7848 | | 1 | PRİZDİREK KEÇE KAPAK ORİNGİ | O-RING | 138X3mm | | ♦ | ♦ | ♦ | ♦ | ♦ | ♦ | ♦ |
| 20 | K21.04162 | 389 262 4152 | (389 262 0955) | 1 | PRİZDİREK AYAR RAYNELİ | THRUST WASHER | 0,10mm | | ♦ | ♦ | ♦ | ♦ | ♦ | ♦ | ♦ |
| 20 | K21.04243 | 389 262 0855 | | 1 | PRİZDİREK AYAR RAYNELİ | THRUST WASHER | 0,15mm | | ♦ | ♦ | ♦ | ♦ | ♦ | ♦ | ♦ |
| 20 | K21.04151 | 389 262 0755 | | 1 | PRİZDİREK AYAR RAYNELİ | THRUST WASHER | 0,20mm | | ♦ | ♦ | ♦ | ♦ | ♦ | ♦ | ♦ |
| 20 | K21.06715 | 389 262 3055 | | 1 | PRİZDİREK AYAR RAYNELİ | THRUST WASHER | 0,25mm | | ♦ | ♦ | ♦ | ♦ | ♦ | ♦ | ♦ |
| 20 | K21.04221 | 389 262 3255 | | 1 | PRİZDİREK AYAR RAYNELİ | THRUST WASHER | 0,31mm | | ♦ | ♦ | ♦ | ♦ | ♦ | ♦ | ♦ |
| 20 | K21.04163 | 389 262 3555 | (389 262 0655) | 1 | PRİZDİREK AYAR RAYNELİ | THRUST WASHER | 0,40mm | | ♦ | ♦ | ♦ | ♦ | ♦ | ♦ | ♦ |
| | | | (389 262 4452) | | | | | | | | | | | | |
| 20 | K21.04164 | 389 262 3755 | (389 262 1954) | 1 | PRİZDİREK AYAR RAYNELİ | THRUST WASHER | 0,46mm | | ♦ | ♦ | ♦ | ♦ | ♦ | ♦ | ♦ |
| 20 | K21.04246 | 389 262 3855 | | 1 | PRİZDİREK AYAR RAYNELİ | THRUST WASHER | 0,49mm | | ♦ | ♦ | ♦ | ♦ | ♦ | ♦ | ♦ |
| 20 | K21.04250 | 389 262 4055 | (389 262 0155) | 1 | PRİZDİREK AYAR RAYNELİ | THRUST WASHER | 0,55mm | | ♦ | ♦ | ♦ | ♦ | ♦ | ♦ | ♦ |
| | | | (389 262 2154) | | | | | | | | | | | | |
| 20 | K21.04167 | 389 262 4255 | (389 262 2254) | 1 | PRİZDİREK AYAR RAYNELİ | THRUST WASHER | 0,61mm | | ♦ | ♦ | ♦ | ♦ | ♦ | ♦ | ♦ |
| 20 | K21.04168 | 389 262 4355 | (389 262 2354) | 1 | PRİZDİREK AYAR RAYNELİ | THRUST WASHER | 0,64mm | | ♦ | ♦ | ♦ | ♦ | ♦ | ♦ | ♦ |
| 20 | K21.04169 | 389 262 4555 | (389 262 2454) | 1 | PRİZDİREK AYAR RAYNELİ | THRUST WASHER | 0,70mm | | ♦ | ♦ | ♦ | ♦ | ♦ | ♦ | ♦ |
| 20 | K21.04170 | 389 262 4755 | (389 262 2554) | 1 | PRİZDİREK AYAR RAYNELİ | THRUST WASHER | 0,76mm | | ♦ | ♦ | ♦ | ♦ | ♦ | ♦ | ♦ |
| 20 | K21.04281 | 389 262 4855 | (389 262 0555) | 1 | PRİZDİREK AYAR RAYNELİ | THRUST WASHER | 0,79mm | | ♦ | ♦ | ♦ | ♦ | ♦ | ♦ | ♦ |
| 20 | K21.04282 | 389 262 5555 | | 1 | PRİZDİREK AYAR RAYNELİ | THRUST WASHER | 1,00mm | | ♦ | ♦ | ♦ | ♦ | ♦ | ♦ | ♦ |
| 20 | K21.04171 | 389 262 9654 | (389 262 2654) | 1 | PRİZDİREK AYAR RAYNELİ | THRUST WASHER | 2,00mm | | ♦ | ♦ | ♦ | ♦ | ♦ | ♦ | ♦ |
| 21a | K21.06498 | 930 260 0058 | | 1 | HAVALANDIRMA TAMİR TAKIMI | REPAIR KIT | | (K) | ♦ | | ♦ | | | ♦ | |
| 21b | K21.07027 | 960 260 0058 | | 1 | HAVALANDIRMA TAMİR TAKIMI | REPAIR KIT | | (L) | | ♦ | | ♦ | ♦ | | ♦ |
| 22a | K21.06301 | 960 261 1933 | | 1 | GRUP DURDURUCU KAPAĞI | COVER | | (K) | ♦ | | ♦ | | | ♦ | |
| 22b | K21.06949 | 960 261 4133 | | 1 | GRUP DURDURUCU KAPAĞI | COVER | | (L) | | ♦ | | ♦ | ♦ | | ♦ |
| 23 | K21.06636 | 015 997 4048 | (020 997 8748) | 1 | GRUP DURDURUCU PİSTON ORİNGİ | O-RING | 5X3mm | | ♦ | ♦ | ♦ | ♦ | ♦ | ♦ | ♦ |
| 24 | K21.06396 | 947 260 0718 | (960 260 3318) | 1 | GRUP DURD.PİSTON TAMİR TAKIMI | REPAIR KIT | | | ♦ | | ♦ | | | ♦ | |
| 25 | K21.06302 | 960 260 1718 | | 1 | GRUP DURDURUCU KAPAK PİSTONU | PISTON | | (K) | ♦ | | ♦ | | | ♦ | |
| 26 | K21.06967 | 960 260 3418 | | 1 | GRUP DURDURUCU KAPAK PİSTONU | PISTON | | (L) | | ♦ | | ♦ | ♦ | | ♦ |
| 27 | K21.06431 | 960 262 0291 | (960 262 0191) | 1 | KAVRAMA HALKA SETİ | PARTS KIT | | | ♦ | ♦ | ♦ | ♦ | ♦ | ♦ | ♦ |

NOTES :
Parts coded with alphabetic letters are used together.

NOTLAR :
Alfabetik harf ile kodlanan parçalar birlikte kullanılır.





Original parts names, oem numbers, symbols and descriptions used in this catalogue are for reference purposes only.

# GEARBOX G 281-12 KL / 14,93 - 1,0

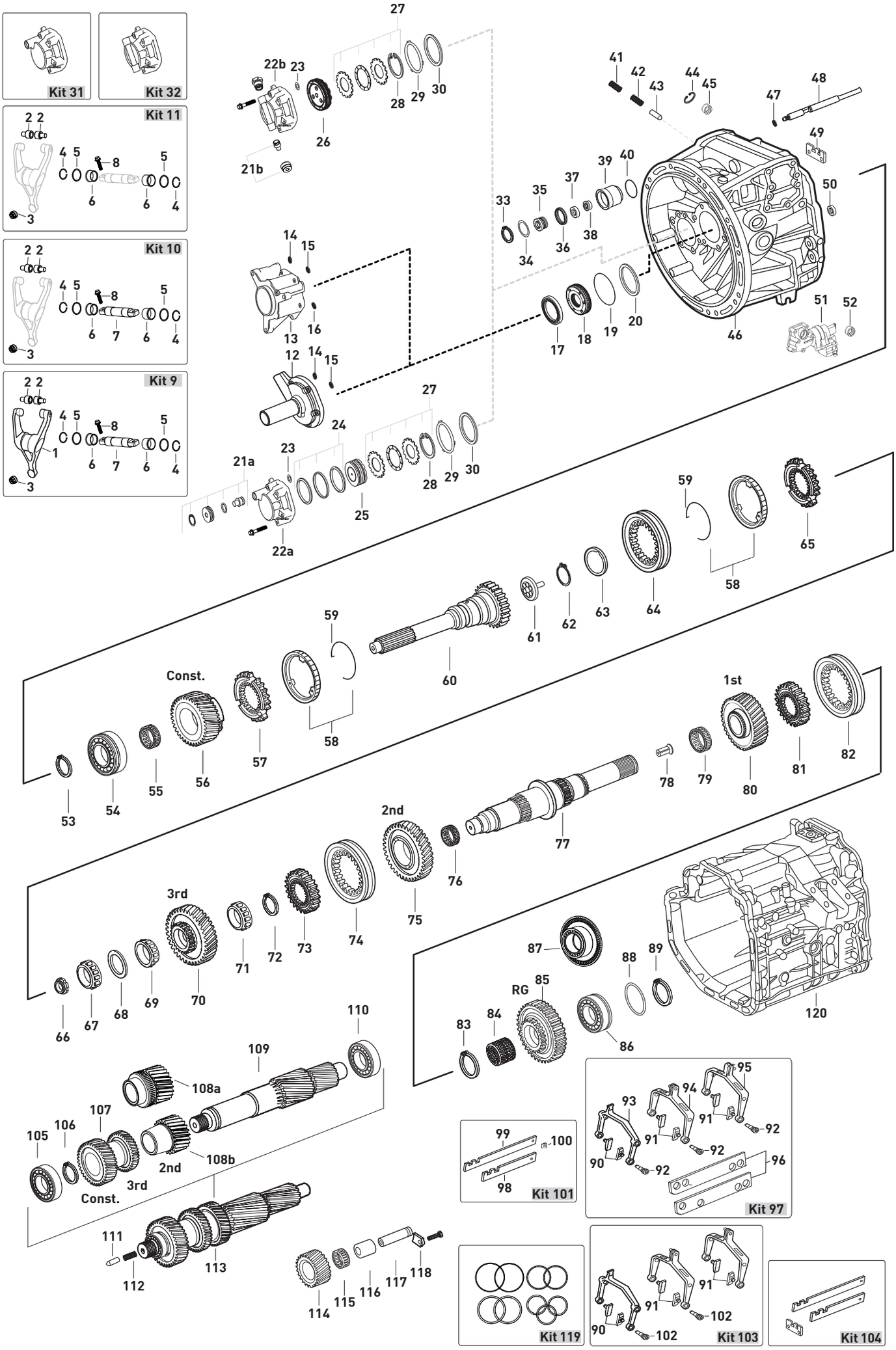




Original parts names, oem numbers, symbols and descriptions used in this catalogue are for reference purposes only.

| Fig. | Kacmaz No | Oem No | Oem Old No | Pcs. | Ürün Tanımı | Description | Sizes | Not | 715370 | 715371 | 715372 | 715374 | 715376 | 715378 | 715379 |
|---|---|---|---|---|---|---|---|---|---|---|---|---|---|---|---|
| 28 | K21.06730 | 970 994 3541 | (000472 100000) | 1 | GRUP DURDURUCU KİLİT SEKMANI | RETAINING RING | 3,00mm | | ♦ | ♦ | ♦ | ♦ | ♦ | ♦ | ♦ |
| 29 | K21.06533 | 028 997 2348 | (004 997 2248) | 1 | GRUP DURDURUCU KAPAK ORİNGİ | O-RING | 100X3mm | | ♦ | ♦ | ♦ | ♦ | ♦ | ♦ | ♦ |
| 30 | K21.04192 | 406 337 0252 | | 1 | GRUP MİLİ ÖN BİLYA RAYNELİ | THRUST WASHER | 0,10mm | | ♦ | ♦ | ♦ | ♦ | ♦ | ♦ | ♦ |
| 30 | K21.04150 | 406 337 0352 | | 1 | GRUP MİLİ ÖN BİLYA RAYNELİ | THRUST WASHER | 0,20mm | | ♦ | ♦ | ♦ | ♦ | ♦ | ♦ | ♦ |
| 30 | K21.94150 | | | 1 | GRUP MİLİ ÖN BİLYA RAYNELİ | THRUST WASHER | 0,25mm | | ♦ | ♦ | ♦ | ♦ | ♦ | ♦ | ♦ |
| 30 | K21.04338 | 406 337 0452 | | 1 | GRUP MİLİ ÖN BİLYA RAYNELİ | THRUST WASHER | 0,30mm | | ♦ | ♦ | ♦ | ♦ | ♦ | ♦ | ♦ |
| 30 | K21.04196 | 389 263 5352 | (389 263 3252) | 1 | GRUP MİLİ ÖN BİLYA RAYNELİ | THRUST WASHER | 0,40mm | | ♦ | ♦ | ♦ | ♦ | ♦ | ♦ | ♦ |
| 30 | K21.04194 | 389 263 3352 | | 1 | GRUP MİLİ ÖN BİLYA RAYNELİ | THRUST WASHER | 0,45mm | | ♦ | ♦ | ♦ | ♦ | ♦ | ♦ | ♦ |
| 30 | K21.06719 | 389 263 5652 | | 1 | GRUP MİLİ ÖN BİLYA RAYNELİ | THRUST WASHER | 0,49mm | | ♦ | ♦ | ♦ | ♦ | ♦ | ♦ | ♦ |
| 30 | K21.04197 | 389 263 5852 | (389 263 3552) | 1 | GRUP MİLİ ÖN BİLYA RAYNELİ | THRUST WASHER | 0,55mm | | ♦ | ♦ | ♦ | ♦ | ♦ | ♦ | ♦ |
| 30 | K21.04340 | 389 263 6052 | | 1 | GRUP MİLİ ÖN BİLYA RAYNELİ | THRUST WASHER | 0,61mm | | ♦ | ♦ | ♦ | ♦ | ♦ | ♦ | ♦ |
| 30 | K21.04198 | 389 263 6352 | (389 263 3852) | 1 | GRUP MİLİ ÖN BİLYA RAYNELİ | THRUST WASHER | 0,70mm | | ♦ | ♦ | ♦ | ♦ | ♦ | ♦ | ♦ |
| 30 | K21.04154 | 389 263 3952 | | 1 | GRUP MİLİ ÖN BİLYA RAYNELİ | THRUST WASHER | 0,75mm | | ♦ | ♦ | ♦ | ♦ | ♦ | ♦ | ♦ |
| 30 | K21.04199 | 389 263 6852 | | 1 | GRUP MİLİ ÖN BİLYA RAYNELİ | THRUST WASHER | 0,85mm | | ♦ | ♦ | ♦ | ♦ | ♦ | ♦ | ♦ |
| 30 | K21.04200 | 389 263 7352 | | 1 | GRUP MİLİ ÖN BİLYA RAYNELİ | THRUST WASHER | 1,00mm | | ♦ | ♦ | ♦ | ♦ | ♦ | ♦ | ♦ |
| 30 | K21.04201 | 389 263 7852 | | 1 | GRUP MİLİ ÖN BİLYA RAYNELİ | THRUST WASHER | 1,15mm | | ♦ | ♦ | ♦ | ♦ | ♦ | ♦ | ♦ |
| 30 | K21.04202 | 389 263 8352 | | 1 | GRUP MİLİ ÖN BİLYA RAYNELİ | THRUST WASHER | 1,30mm | | ♦ | ♦ | ♦ | ♦ | ♦ | ♦ | ♦ |
| 31 | K21.06487 | | | 1 | GRUP DURDURUCU KAPAĞI KOMPLE | REPAIR KIT | | (K) | ♦ | | ♦ | | | ♦ | |
| 32 | K21.06948 | 960 260 5965 | (960 260 4865) | 1 | GRUP DURDURUCU KAPAĞI KOMPLE | REPAIR KIT | | (L) | | ♦ | | ♦ | ♦ | | ♦ |
| 33 | | 006 994 4241 | (000472 065001) | 1 | TAKVİYE PİSTON SEKMANI | RETAINING RING | 65X2,5mm | | ♦ | ♦ | ♦ | ♦ | ♦ | ♦ | ♦ |
| 34 | K21.04233 | 389 262 2555 | | 1 | TAKVİYE SİLİNDİR PULU | SPACER WASHER | 0,70mm | | ♦ | ♦ | ♦ | ♦ | ♦ | ♦ | ♦ |
| 34 | K21.04234 | 389 262 2655 | | 1 | TAKVİYE SİLİNDİR PULU | SPACER WASHER | 0,90mm | | ♦ | ♦ | ♦ | ♦ | ♦ | ♦ | ♦ |
| 34 | K21.04112 | 389 262 3254 | | 1 | TAKVİYE SİLİNDİR PULU | SPACER WASHER | 1,05mm | | ♦ | ♦ | ♦ | ♦ | ♦ | ♦ | ♦ |
| 34 | K21.04111 | 389 262 3354 | | 1 | TAKVİYE SİLİNDİR PULU | SPACER WASHER | 1,10mm | | ♦ | ♦ | ♦ | ♦ | ♦ | ♦ | ♦ |
| 34 | K21.04109 | 389 262 3554 | | 1 | TAKVİYE SİLİNDİR PULU | SPACER WASHER | 1,20mm | | ♦ | ♦ | ♦ | ♦ | ♦ | ♦ | ♦ |
| 34 | K21.04105 | 389 262 2052 | | 1 | TAKVİYE SİLİNDİR PULU | SPACER WASHER | 1,40mm | | ♦ | ♦ | ♦ | ♦ | ♦ | ♦ | ♦ |
| 34 | K21.04093 | 389 262 2355 | | 1 | TAKVİYE SİLİNDİR PULU | SPACER WASHER | 1,79mm | | ♦ | ♦ | ♦ | ♦ | ♦ | ♦ | ♦ |
| 34 | K21.04025 | 389 262 3252 | | 1 | TAKVİYE SİLİNDİR PULU | SPACER WASHER | 2,00mm | | ♦ | ♦ | ♦ | ♦ | ♦ | ♦ | ♦ |
| 34 | K21.04024 | 389 262 3352 | | 1 | TAKVİYE SİLİNDİR PULU | SPACER WASHER | 2,50mm | | ♦ | ♦ | ♦ | ♦ | ♦ | ♦ | ♦ |
| 35 | K21.06994 | 945 267 0218 | (387 267 0918) | 1 | TAKVİYE MİL PİSTONU | PISTON | | | ♦ | ♦ | ♦ | ♦ | ♦ | ♦ | ♦ |
| | | | (387 267 0618) | | | | | | | | | | | | |
| 36 | K21.03524 | 006 997 6447 | (020 997 6647) | 1 | TAKVİYE HAVA KEÇESİ | OIL SEAL | 41X48X11,5mm | | ♦ | ♦ | ♦ | ♦ | ♦ | ♦ | ♦ |
| | | | (012 997 3347) | | | | | | | | | | | | |
| 37 | K21.04178 | 387 267 0650 | (387 267 0250) | 1 | TAKVİYE SİLİNDİR BURCU | BUSHING | 34X22X8mm | | ♦ | ♦ | ♦ | ♦ | ♦ | ♦ | ♦ |
| 38 | K21.03523 | 000 267 0197 | (000 267 0397) | 1 | TAKVİYE HİLAL MİL KEÇESİ | OIL SEAL | 22X32X8mm | | ♦ | ♦ | ♦ | ♦ | ♦ | ♦ | ♦ |
| 39 | K21.06036 | 945 267 0819 | (945 267 0119) | 1 | TAKVİYE SİLİNDİR GÖVDESİ | CYLINDER | | | ♦ | ♦ | ♦ | ♦ | ♦ | ♦ | ♦ |
| | | | (945 267 0719) | | | | | | | | | | | | |
| | | | (945 267 0019) | | | | | | | | | | | | |
| 40 | K21.06534 | 022 997 4248 | | 1 | TAKVİYE SİLİNDİR ORİNGİ | O-RING | 55,6X3mm | | ♦ | ♦ | ♦ | ♦ | ♦ | ♦ | ♦ |
| 41 | K21.06015 | 387 993 4501 | | 1 | ŞANZ.TAKVİYE KİLİT FİŞEK YAYI | SPRING | 6,2X63mm | | ♦ | ♦ | ♦ | ♦ | ♦ | ♦ | ♦ |
| 42 | K21.03500 | 387 993 4401 | (387 993 2501) | 1 | KİLİT YAYI | SPRING | 9,8X63,3mm | | ♦ | ♦ | ♦ | ♦ | ♦ | ♦ | ♦ |
| 43 | K21.03492 | 389 267 1174 | (387 267 0074) | 1 | KİLİT FİŞEĞİ | PIN | | | ♦ | ♦ | ♦ | ♦ | ♦ | ♦ | ♦ |
| 44 | K21.06579 | 945 267 0073 | | 1 | ÖN GÖVDE MASURA BİLYA SEKMANI | SEEGER RING | | | ♦ | | ♦ | | | ♦ | |
| 45 | K21.06580 | 002 981 5712 | (945 268 0150) | 1 | ÖN GÖVDE MASURA BİLYA | BEARING | 25X39X20mm | | ♦ | | ♦ | | | ♦ | |
| 46 | | 945 260 8812 | (930 260 5011) | 1 | ŞANZIMAN ÖN GÖVDE | HOUSING | | | ♦ | | ♦ | | | | |
| | | | (930 260 2211) | | | | | | | | | | | | |
| | | | (945 261 7701) | | | | | | | | | | | | |
| 46 | | 960 260 5712 | (960 260 7511) | 1 | ŞANZIMAN ÖN GÖVDE | HOUSING | | | | ♦ | | | ♦ | | |
| 46 | | 960 260 2412 | | 1 | ŞANZIMAN ÖN GÖVDE | HOUSING | | | | ♦ | | ♦ | | | |
| 46 | | 945 260 0423 | | 1 | ŞANZIMAN ÖN GÖVDE | HOUSING | | | | | | | | ♦ | |
| 46 | | 960 260 5723 | | 1 | ŞANZIMAN ÖN GÖVDE | HOUSING | | | | | | | | | ♦ |
| 47 | K21.04160 | 387 263 2652 | | 1 | TAKVİYE HİLAL MİL PULU | SPACER WASHER | 0,20mm | | ♦ | ♦ | ♦ | ♦ | ♦ | ♦ | ♦ |
| 47 | K21.04161 | 387 263 2752 | | 1 | TAKVİYE HİLAL MİL PULU | SPACER WASHER | 0,40mm | | ♦ | ♦ | ♦ | ♦ | ♦ | ♦ | ♦ |

NOTES :
Parts coded with alphabetic letters are used together.

NOTLAR :
Alfabetik harf ile kodlanan parçalar birlikte kullanılır.





Original parts names, oem numbers, symbols and descriptions used in this catalogue are for reference purposes only.

# GEARBOX G 281-12 KL / 14,93 - 1,0

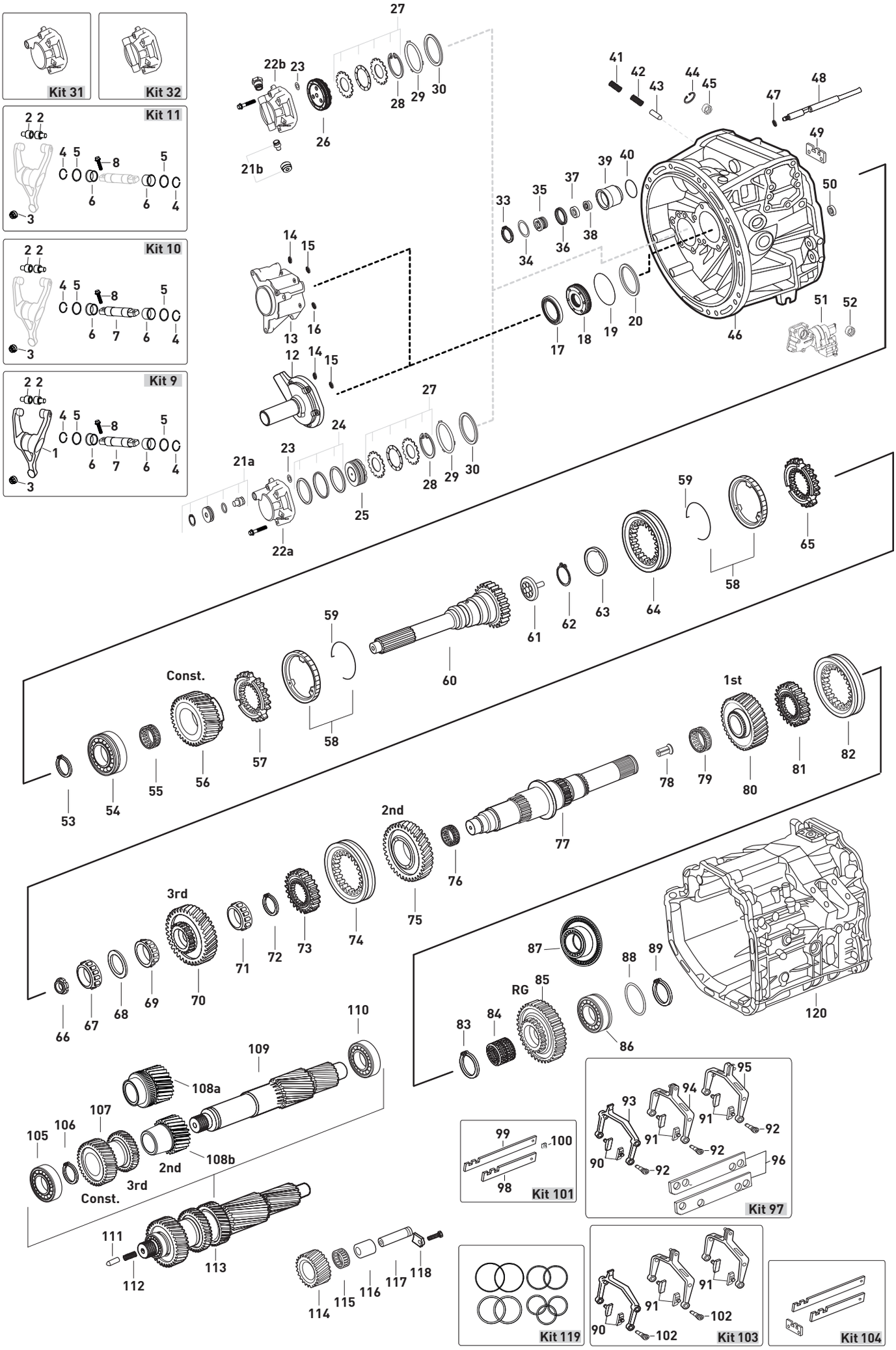




Original parts names, oem numbers, symbols and descriptions used in this catalogue are for reference purposes only.

| Fig. | Kacmaz No | Oem No | Oem Old No | Pcs. | Ürün Tanımı | Description | Sizes | Not | 715370 | 715371 | 715372 | 715374 | 715376 | 715378 | 715379 |
|---|---|---|---|---|---|---|---|---|---|---|---|---|---|---|---|
| 47 | | 387 263 2852 | | 1 | TAKVİYE HİLAL MİL PULU | SPACER WASHER | 0,60mm | | ♦ | ♦ | ♦ | ♦ | ♦ | ♦ | ♦ |
| 47 | | 387 263 3052 | | 1 | TAKVİYE HİLAL MİL PULU | SPACER WASHER | 1,00mm | | ♦ | ♦ | ♦ | ♦ | ♦ | ♦ | ♦ |
| 48 | | 930 267 2117 | | 1 | TAKVİYE HİLAL MİLİ | G.SHIFT RAIL | | | ♦ | | ♦ | | | ♦ | |
| 48 | | 960 267 1817 | | 1 | TAKVİYE HİLAL MİLİ | G.SHIFT RAIL | | | | ♦ | | ♦ | ♦ | | ♦ |
| 49 | | 930 265 0245 | | 1 | VİTES HİLAL ÇITA KİLİTLEMESİ | GUIDE | | | ♦ | | | | | | |
| 49 | K21.06847 | 960 265 0545 | | 1 | VİTES HİLAL ÇITA KİLİTLEMESİ | GUIDE | | | ♦ | ♦ | ♦ | ♦ | ♦ | ♦ | ♦ |
| 50 | K21.04252 | 000 992 7603 | (389 267 0050) | 1 | TAKVİYE HİLAL MİL BURCU | BUSHING | 21X27X16mm | | ♦ | | ♦ | | | ♦ | |
| 50 | | 004 992 6601 | | 1 | TAKVİYE HİLAL MİL BURCU | BUSHING | | | | ♦ | | ♦ | ♦ | | ♦ |
| 51 | | 930 260 0263 | (002 260 3863) | 1 | VİTES KULESİ KOMPLE | SHIFT CYLINDER | | | ♦ | | ♦ | | | ♦ | |
| | | | (930 260 0063) | | | | | | | | | | | | |
| | | | (930 260 0163) | | | | | | | | | | | | |
| 52 | | 021 981 4710 | (013 981 7110) | 1 | VİTES KULE BİLYASI | | 40X47X20 | | ♦ | | ♦ | | | ♦ | |
| | | | (018 981 1010) | | | | | | | | | | | | |
| | | | (018 981 1510) | | | | | | | | | | | | |
| 53 | K21.04347 | 387 262 8673 | | 1 | PRİZDİREK ÖN BİLYA SEKMANI | RETAINING RING | 3,15mm | | ♦ | ♦ | ♦ | ♦ | ♦ | ♦ | ♦ |
| 53 | K21.04346 | 387 262 8773 | | 1 | PRİZDİREK ÖN BİLYA SEKMANI | RETAINING RING | 3,20mm | | ♦ | ♦ | ♦ | ♦ | ♦ | ♦ | ♦ |
| 53 | K21.07015 | 387 262 8873 | | 1 | PRİZDİREK ÖN BİLYA SEKMANI | RETAINING RING | 3,25mm | | ♦ | ♦ | ♦ | ♦ | ♦ | ♦ | ♦ |
| 53 | K21.04348 | 387 262 8973 | | 1 | PRİZDİREK ÖN BİLYA SEKMANI | RETAINING RING | 3,30mm | | ♦ | ♦ | ♦ | ♦ | ♦ | ♦ | ♦ |
| 53 | K21.07016 | 387 262 9073 | | 1 | PRİZDİREK ÖN BİLYA SEKMANI | RETAINING RING | 3,35mm | | ♦ | ♦ | ♦ | ♦ | ♦ | ♦ | ♦ |
| 53 | K21.04349 | 387 262 9173 | | 1 | PRİZDİREK ÖN BİLYA SEKMANI | RETAINING RING | 3,40mm | | ♦ | ♦ | ♦ | ♦ | ♦ | ♦ | ♦ |
| 53 | K21.07017 | 387 262 9273 | | 1 | PRİZDİREK ÖN BİLYA SEKMANI | RETAINING RING | 3,45mm | | ♦ | ♦ | ♦ | ♦ | ♦ | ♦ | ♦ |
| 53 | K21.04350 | 387 262 9373 | | 1 | PRİZDİREK ÖN BİLYA SEKMANI | RETAINING RING | 3,50mm | | ♦ | ♦ | ♦ | ♦ | ♦ | ♦ | ♦ |
| 54 | K21.03618 | 011 981 1305 | (014 981 9005) | 1 | PRİZDİREK ÖN BİLYA | ROLLER BEARING | 75X140X34,25mm | | ♦ | ♦ | ♦ | ♦ | ♦ | ♦ | ♦ |
| | | | (008 981 8605) | | | | | | | | | | | | |
| | | | (008 981 2605) | | | | | | | | | | | | |
| 55 | K21.03855 | 022 981 7910 | (022 981 5310) | 1 | TAKVİYE MASURA BİLYA | NEEDLE CAGE | 84X90X55mm | | ♦ | ♦ | ♦ | ♦ | ♦ | ♦ | ♦ |
| 56 | K21.03574 | 960 262 0617 | (960 262 0517) | 1 | TAKVİYE DİŞLİSİ 29 DİŞ | CONSTANT GEAR 29 T. | | | ♦ | ♦ | ♦ | ♦ | ♦ | ♦ | ♦ |
| | | | (930 262 0717) | | | | | | | | | | | | |
| | | | (948 262 2210) | | | | | | | | | | | | |
| | | | (948 262 2310) | | | | | | | | | | | | |
| 57 | K21.03146 | 945 262 8234 | (945 262 5434) | 1 | TAKVİYE SENKROMENÇ | ENGAGING RING | | | ♦ | ♦ | ♦ | ♦ | ♦ | ♦ | ♦ |
| 58 | K21.03148 | 947 260 1945 | (947 260 4645) | 2 | TAKVİYE FRENLEME (Mo) | SYNCHRONIZING CONE / Mo | | | ♦ | ♦ | ♦ | ♦ | ♦ | ♦ | |
| | | | (946 262 6137) | | | | | | | | | | | | |
| 58 | K21.06299 | 947 260 3545 | (947 260 5145) | 2 | TAKVİYE FRENLEME (C) | SYNCHRONIZING CONE / C | | | ♦ | ♦ | ♦ | ♦ | ♦ | ♦ | |
| | | | (947 260 2945) | | | | | | | | | | | | |
| | | | (947 260 0745) | | | | | | | | | | | | |
| 59 | K21.03055 | 387 262 0893 | (387 262 0793) | 2 | FRENLEME TELİ | SPRING | | | ♦ | ♦ | ♦ | ♦ | ♦ | ♦ | ♦ |
| 60 | K21.03575 | 960 262 5802 | (930 262 0403) | 1 | PRİZDİREK 66 DİŞ | INPUT SHAFT 66 T. | | | ♦ | ♦ | ♦ | ♦ | ♦ | ♦ | ♦ |
| | | | (948 262 0602) | | | | | | | | | | | | |
| | | | (948 262 0202) | | | | | | | | | | | | |
| 61 | K21.04001 | 976 269 0034 | (960 269 0434) | 1 | PRİZDİREK YAĞ PİPETİ | OIL COLLECTOR | | | ♦ | ♦ | ♦ | ♦ | ♦ | ♦ | ♦ |
| 62 | K21.04002 | 000 994 9841 | | 1 | PRİZDİREK YAĞ PİPET SEKMANI | RETAINING RING | | | ♦ | ♦ | ♦ | ♦ | ♦ | ♦ | ♦ |
| 63 | K21.03513 | 001 262 0262 | (000 262 8662) | 1 | PRİZDİREK ARKA KEÇE | OIL SEAL | 73,5X101X7mm | | ♦ | ♦ | ♦ | ♦ | ♦ | ♦ | ♦ |
| | | | (000 262 9062) | | | | | | | | | | | | |
| 64 | K21.03151 | 945 262 6523 | (930 262 0523) | 1 | TAKVİYE HALKA | ENGAGING SLEEVE | | | ♦ | ♦ | ♦ | ♦ | ♦ | ♦ | ♦ |
| 65 | K21.03576 | 930 262 0234 | (930 262 0034) | 1 | TAKVİYE SENKROMENÇ | ENGAGING RING | | | ♦ | ♦ | ♦ | ♦ | ♦ | ♦ | ♦ |
| 66 | K21.03432 | 945 990 0250 | (945 990 0150) | 1 | KAMALI MİL SOMUNU | NUT | M30X1,5 | | ♦ | ♦ | ♦ | ♦ | ♦ | ♦ | ♦ |
| 67 | K21.03632 | 020 981 5205 | (017 981 1305) | 1 | KAMALI MİL UÇ BİLYA | ROLLER BEARING | 39,69X40,39mm | | ♦ | ♦ | ♦ | ♦ | ♦ | ♦ | ♦ |
| 68 | K21.04024 | 389 262 3352 | | 1 | KAMALI MİL AYAR PULU | THRUST WASHER | 2,50mm | | ♦ | ♦ | ♦ | ♦ | ♦ | ♦ | ♦ |
| 68 | K21.04025 | 389 262 3252 | | 1 | KAMALI MİL AYAR PULU | THRUST WASHER | 2,00mm | | ♦ | ♦ | ♦ | ♦ | ♦ | ♦ | ♦ |
| 68 | K21.04026 | 389 262 3152 | | 1 | KAMALI MİL AYAR PULU | THRUST WASHER | 1,95mm | | ♦ | ♦ | ♦ | ♦ | ♦ | ♦ | ♦ |
| 68 | K21.04027 | 389 262 3052 | | 1 | KAMALI MİL AYAR PULU | THRUST WASHER | 1,90mm | | ♦ | ♦ | ♦ | ♦ | ♦ | ♦ | ♦ |
| 68 | K21.04028 | 389 262 2952 | | 1 | KAMALI MİL AYAR PULU | THRUST WASHER | 1,85mm | | ♦ | ♦ | ♦ | ♦ | ♦ | ♦ | ♦ |

NOTES :
Parts coded with alphabetic letters are used together.

NOTLAR :
Alfabetik harf ile kodlanan parçalar birlikte kullanılır.





Original parts names, oem numbers, symbols and descriptions used in this catalogue are for reference purposes only.

# GEARBOX G 281-12 KL / 14,93 - 1,0

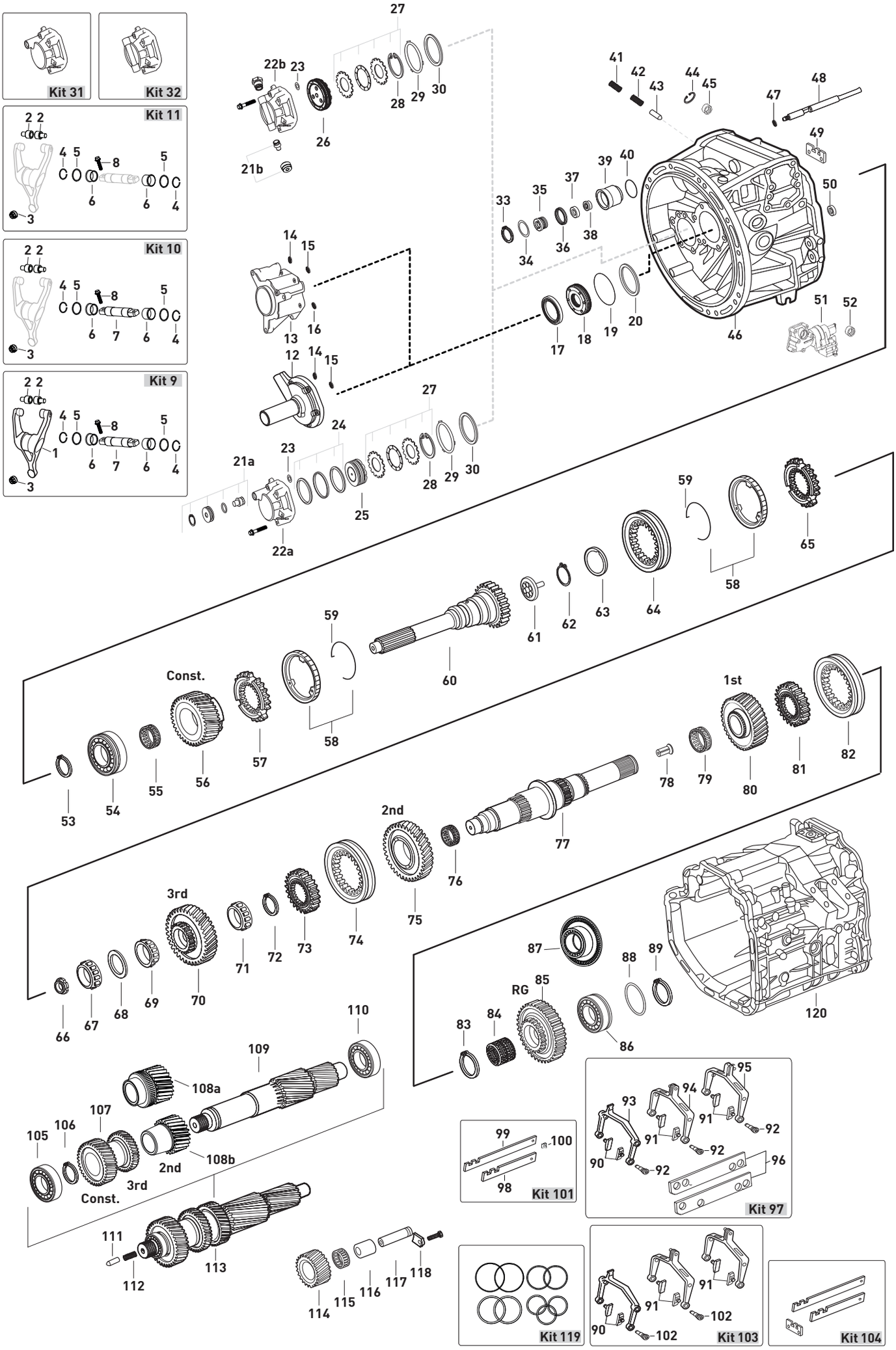




Original parts names, oem numbers, symbols and descriptions used in this catalogue are for reference purposes only.

| Fig. | Kacmaz No | Oem No | Oem Old No | Pcs. | Ürün Tanımı | Description | Sizes | Not | 715370 | 715371 | 715372 | 715374 | 715376 | 715378 | 715379 |
|---|---|---|---|---|---|---|---|---|---|---|---|---|---|---|---|
| 68 | K21.04092 | 389 262 2455 | | 1 | KAMALI MİL AYAR PULU | THRUST WASHER | 1,82mm | | ♦ | ♦ | ♦ | ♦ | ♦ | ♦ | ♦ |
| 68 | K21.04093 | 389 262 2355 | | 1 | KAMALI MİL AYAR PULU | THRUST WASHER | 1,79mm | | ♦ | ♦ | ♦ | ♦ | ♦ | ♦ | ♦ |
| 68 | K21.04094 | 389 262 2255 | | 1 | KAMALI MİL AYAR PULU | THRUST WASHER | 1,76mm | | ♦ | ♦ | ♦ | ♦ | ♦ | ♦ | ♦ |
| 68 | K21.04095 | 389 262 2155 | | 1 | KAMALI MİL AYAR PULU | THRUST WASHER | 1,73mm | | ♦ | ♦ | ♦ | ♦ | ♦ | ♦ | ♦ |
| 68 | K21.04096 | 389 262 2055 | | 1 | KAMALI MİL AYAR PULU | THRUST WASHER | 1,67mm | | ♦ | ♦ | ♦ | ♦ | ♦ | ♦ | ♦ |
| 68 | K21.04097 | 389 262 1955 | | 1 | KAMALI MİL AYAR PULU | THRUST WASHER | 1,64mm | | ♦ | ♦ | ♦ | ♦ | ♦ | ♦ | ♦ |
| 68 | K21.04098 | 389 262 1855 | | 1 | KAMALI MİL AYAR PULU | THRUST WASHER | 1,61mm | | ♦ | ♦ | ♦ | ♦ | ♦ | ♦ | ♦ |
| 68 | K21.04099 | 389 262 1755 | | 1 | KAMALI MİL AYAR PULU | THRUST WASHER | 1,58mm | | ♦ | ♦ | ♦ | ♦ | ♦ | ♦ | ♦ |
| 68 | K21.04100 | 389 262 2352 | | 1 | KAMALI MİL AYAR PULU | THRUST WASHER | 1,55mm | | ♦ | ♦ | ♦ | ♦ | ♦ | ♦ | ♦ |
| 68 | K21.04101 | 389 262 1655 | | 1 | KAMALI MİL AYAR PULU | THRUST WASHER | 1,52mm | | ♦ | ♦ | ♦ | ♦ | ♦ | ♦ | ♦ |
| 68 | K21.04102 | 389 262 1555 | | 1 | KAMALI MİL AYAR PULU | THRUST WASHER | 1,49mm | | ♦ | ♦ | ♦ | ♦ | ♦ | ♦ | ♦ |
| 68 | K21.04103 | 389 262 1455 | | 1 | KAMALI MİL AYAR PULU | THRUST WASHER | 1,46mm | | ♦ | ♦ | ♦ | ♦ | ♦ | ♦ | ♦ |
| 68 | K21.04104 | 389 262 1355 | | 1 | KAMALI MİL AYAR PULU | THRUST WASHER | 1,43mm | | ♦ | ♦ | ♦ | ♦ | ♦ | ♦ | ♦ |
| 68 | K21.04105 | 389 262 2052 | | 1 | KAMALI MİL AYAR PULU | THRUST WASHER | 1,40mm | | ♦ | ♦ | ♦ | ♦ | ♦ | ♦ | ♦ |
| 68 | K21.04106 | 389 262 1952 | | 1 | KAMALI MİL AYAR PULU | THRUST WASHER | 1,35mm | | ♦ | ♦ | ♦ | ♦ | ♦ | ♦ | ♦ |
| 68 | K21.04107 | 389 262 2754 | | 1 | KAMALI MİL AYAR PULU | THRUST WASHER | 1,30mm | | ♦ | ♦ | ♦ | ♦ | ♦ | ♦ | ♦ |
| 68 | K21.04108 | 389 262 3654 | | 1 | KAMALI MİL AYAR PULU | THRUST WASHER | 1,25mm | | ♦ | ♦ | ♦ | ♦ | ♦ | ♦ | ♦ |
| 68 | K21.04109 | 389 262 3554 | | 1 | KAMALI MİL AYAR PULU | THRUST WASHER | 1,20mm | | ♦ | ♦ | ♦ | ♦ | ♦ | ♦ | ♦ |
| 68 | K21.04110 | 389 262 3454 | | 1 | KAMALI MİL AYAR PULU | THRUST WASHER | 1,15mm | | ♦ | ♦ | ♦ | ♦ | ♦ | ♦ | ♦ |
| 68 | K21.04111 | 389 262 3354 | | 1 | KAMALI MİL AYAR PULU | THRUST WASHER | 1,10mm | | ♦ | ♦ | ♦ | ♦ | ♦ | ♦ | ♦ |
| 68 | K21.04112 | 389 262 3254 | | 1 | KAMALI MİL AYAR PULU | THRUST WASHER | 1,05mm | | ♦ | ♦ | ♦ | ♦ | ♦ | ♦ | ♦ |
| 68 | K21.04113 | 389 262 2854 | | 1 | KAMALI MİL AYAR PULU | THRUST WASHER | 0,50mm | | ♦ | ♦ | ♦ | ♦ | ♦ | ♦ | ♦ |
| 68 | K21.94113 | | | 1 | KAMALI MİL AYAR PULU | THRUST WASHER | 0,40mm | | ♦ | ♦ | ♦ | ♦ | ♦ | ♦ | ♦ |
| 68 | K21.84113 | | | 1 | KAMALI MİL AYAR PULU | THRUST WASHER | 0,30mm | | ♦ | ♦ | ♦ | ♦ | ♦ | ♦ | ♦ |
| 68 | K21.74113 | | | 1 | KAMALI MİL AYAR PULU | THRUST WASHER | 0,20mm | | ♦ | ♦ | ♦ | ♦ | ♦ | ♦ | ♦ |
| 68 | K21.64113 | | | 1 | KAMALI MİL AYAR PULU | THRUST WASHER | 0,10mm | | ♦ | ♦ | ♦ | ♦ | ♦ | ♦ | ♦ |
| 69 | K21.03620 | 017 981 5105 | (015 981 6105) | 1 | 3.VİTES DİŞLİ ÖN BİLYA | ROLLER BEARING | 50X41,3mm | | ♦ | ♦ | ♦ | ♦ | ♦ | ♦ | ♦ |
| | | | (014 981 2605) | | | | | | | | | | | | |
| 70 | K21.03580 | 960 262 1017 | (930 262 3617) | 1 | 3.VİTES DİŞLİSİ 31 DİŞ | GEAR 3rd 31 T. | | | ♦ | ♦ | ♦ | ♦ | ♦ | ♦ | ♦ |
| | | | (960 262 0917) | | | | | | | | | | | | |
| | | | (948 262 2810) | | | | | | | | | | | | |
| | | | (948 262 2910) | | | | | | | | | | | | |
| 71 | K21.03664 | 017 981 7105 | | 1 | 3.VİTES DİŞLİ ARKA BİLYA | ROLLER BEARING | 55X29,8mm | | ♦ | ♦ | ♦ | ♦ | ♦ | ♦ | ♦ |
| 72 | K21.04343 | 387 262 2073 | | 1 | 2./3.VİTES YILDIZ DİŞLİ SEKMANI | RETAINING RING | 2,40mm | | ♦ | ♦ | ♦ | ♦ | ♦ | ♦ | ♦ |
| 72 | K21.06687 | 387 262 2173 | | 1 | 2./3.VİTES YILDIZ DİŞLİ SEKMANI | RETAINING RING | 2,45mm | | ♦ | ♦ | ♦ | ♦ | ♦ | ♦ | ♦ |
| 72 | K21.04342 | 007 994 0041 | (387 262 2273) | 1 | 2./3.VİTES YILDIZ DİŞLİ SEKMANI | RETAINING RING | 2,50mm | | ♦ | ♦ | ♦ | ♦ | ♦ | ♦ | ♦ |
| 72 | K21.04359 | 387 262 2373 | | 1 | 2./3.VİTES YILDIZ DİŞLİ SEKMANI | RETAINING RING | 2,55mm | | ♦ | ♦ | ♦ | ♦ | ♦ | ♦ | ♦ |
| 72 | K21.04345 | 387 262 2473 | | 1 | 2./3.VİTES YILDIZ DİŞLİ SEKMANI | RETAINING RING | 2,60mm | | ♦ | ♦ | ♦ | ♦ | ♦ | ♦ | ♦ |
| 72 | K21.07021 | 387 262 2573 | | 1 | 2./3.VİTES YILDIZ DİŞLİ SEKMANI | RETAINING RING | 2,65mm | | ♦ | ♦ | ♦ | ♦ | ♦ | ♦ | ♦ |
| 72 | K21.04344 | 387 262 7973 | | 1 | 2./3.VİTES YILDIZ DİŞLİ SEKMANI | RETAINING RING | 2,70mm | | ♦ | ♦ | ♦ | ♦ | ♦ | ♦ | ♦ |
| 72 | K21.07022 | 387 262 8073 | | 1 | 2./3.VİTES YILDIZ DİŞLİ SEKMANI | RETAINING RING | 2,75mm | | ♦ | ♦ | ♦ | ♦ | ♦ | ♦ | ♦ |
| 72 | K21.06588 | 387 262 8173 | | 1 | 2./3.VİTES YILDIZ DİŞLİ SEKMANI | RETAINING RING | 2,80mm | | ♦ | ♦ | ♦ | ♦ | ♦ | ♦ | ♦ |
| 73 | K21.03581 | 960 262 3135 | (945 262 3635) | 1 | 2./3.VİTES YILDIZ DİŞLİ | SYNCHRONIZER HUB | | | ♦ | ♦ | ♦ | ♦ | ♦ | ♦ | ♦ |
| | | | (960 262 2235) | | | | | | | | | | | | |
| | | | (930 262 0835) | | | | | | | | | | | | |
| 74 | K21.03582 | 960 262 1523 | (930 262 0123) | 1 | 2./ 3.VİTES HALKASI | ENGAGING SLEEVE | | | ♦ | ♦ | ♦ | ♦ | ♦ | ♦ | ♦ |
| | | | (930 262 0723) | | | | | | | | | | | | |
| | | | (945 262 5223) | | | | | | | | | | | | |
| 75 | K21.03583 | 930 262 0112 | (930 262 0612) | 1 | 2.VİTES DİŞLİSİ 38 DİŞ | GEAR 2nd 38 T. | | | ♦ | ♦ | ♦ | ♦ | ♦ | ♦ | ♦ |
| | | | (948 262 0212) | | | | | | | | | | | | |
| 76 | K21.03859 | 023 981 5210 | (022 981 5810) | 1 | 2.VİTES MASURA BİLYA | NEEDLE CAGE | 85X93X60mm | | ♦ | ♦ | ♦ | ♦ | ♦ | ♦ | ♦ |
| | | | (022 981 8510) | | | | | | | | | | | | |
| | | | (022 981 5410) | | | | | | | | | | | | |

NOTES :
Parts coded with alphabetic letters are used together.

NOTLAR :
Alfabetik harf ile kodlanan parçalar birlikte kullanılır.





Original parts names, oem numbers, symbols and descriptions used in this catalogue are for reference purposes only.

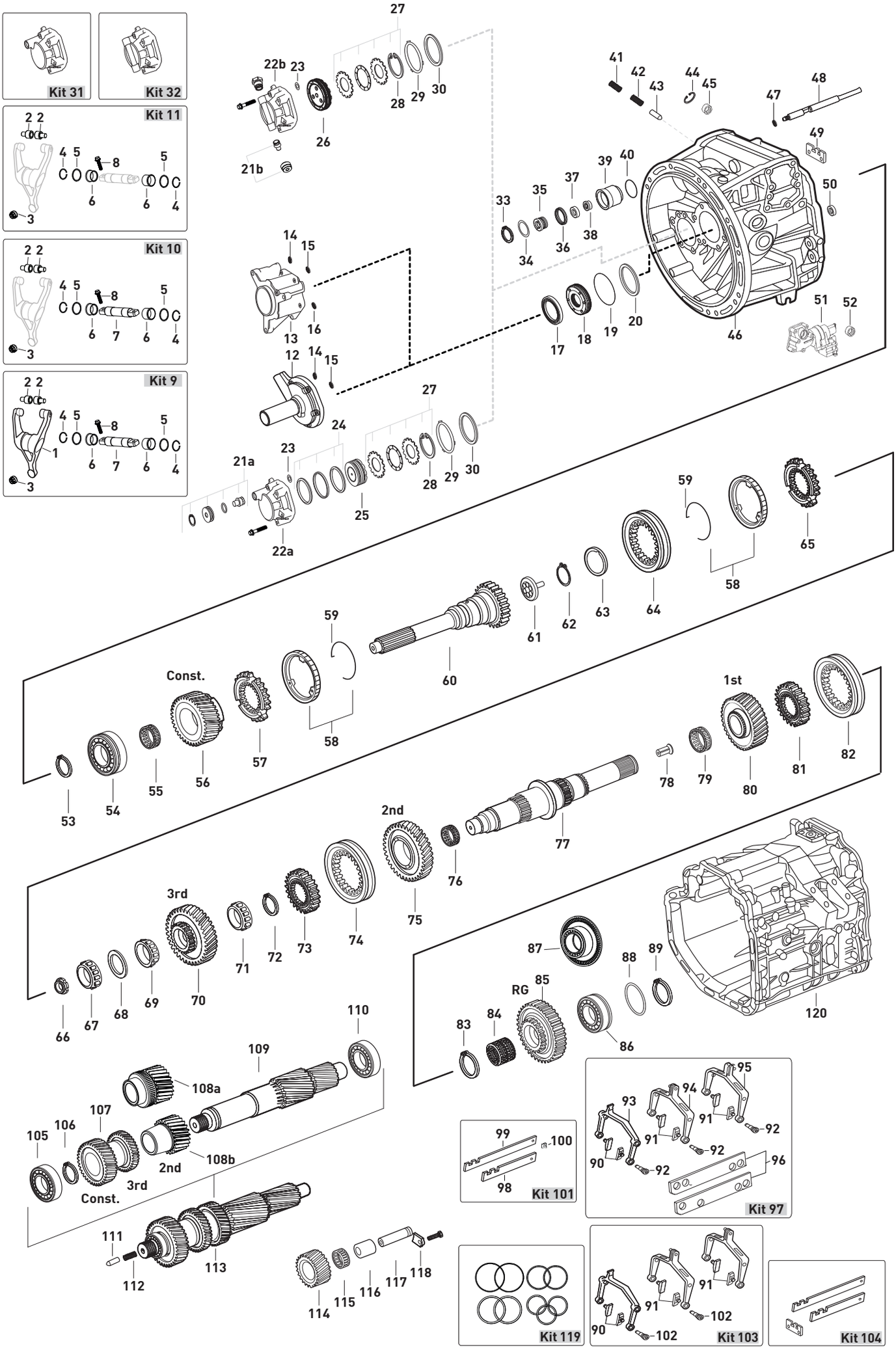




Original parts names, oem numbers, symbols and descriptions used in this catalogue are for reference purposes only.

| Fig. | Kacmaz No | Oem No | Oem Old No | Pcs. | Ürün Tanımı | Description | Sizes | Not | 715370 | 715371 | 715372 | 715374 | 715376 | 715378 | 715379 |
|---|---|---|---|---|---|---|---|---|---|---|---|---|---|---|---|
| 77 | K21.06331 | 930 262 0205 | | 1 | KAMALI MİL | MAIN SHAFT | | (A) | ♦ | | | | | | |
| 77 | K21.03584 | 930 262 0805 | (930 262 2205) | 1 | KAMALI MİL | MAIN SHAFT | | (B) | ♦ | | ♦ | | | | |
| 77 | K21.06980 | 960 262 0105 | (960 262 3805) | 1 | KAMALI MİL | MAIN SHAFT | | (C) | | ♦ | | ♦ | ♦ | ♦ | ♦ |
| | | | (948 262 0205) | | | | | | | | | | | | |
| 78 | K21.04364 | 001 990 2759 | | 1 | KAMALI MİL YAĞ BORUSU | OIL PIPE | | | ♦ | ♦ | ♦ | ♦ | ♦ | ♦ | ♦ |
| 79 | K21.06369 | 024 981 2410 | (022 981 5910) | 1 | 1.VİTES MASURA BİLYA | NEEDLE CAGE | 85X93X73mm | | ♦ | ♦ | ♦ | ♦ | ♦ | ♦ | ♦ |
| | | | (022 981 5510) | | | | | | | | | | | | |
| 80 | K21.03586 | 930 262 0511 | (930 262 0811) | 1 | 1.VİTES DİŞLİSİ 41 DİŞ | GEAR 1st 41 T. | | | ♦ | ♦ | ♦ | ♦ | ♦ | ♦ | ♦ |
| | | | (948 262 0011) | | | | | | | | | | | | |
| 81 | K21.03581 | 960 262 3135 | (945 262 3635) | 1 | 1./GERİ VİTES YILDIZ DİŞLİ | SYNCHRONIZER HUB | | | ♦ | ♦ | ♦ | ♦ | ♦ | ♦ | ♦ |
| | | | (960 262 2235) | | | | | | | | | | | | |
| | | | (930 262 0835) | | | | | | | | | | | | |
| 82 | K21.03582 | 960 262 1523 | (930 262 0123) | 1 | 1./ GERİ VİTES HALKASI | ENGAGING SLEEVE | | | ♦ | ♦ | ♦ | ♦ | ♦ | ♦ | ♦ |
| | | | (930 262 0723) | | | | | | | | | | | | |
| | | | (945 262 5223) | | | | | | | | | | | | |
| 83 | K21.04343 | 387 262 2073 | | 1 | 1./GERİ VİTES YILDIZ DİŞLİ SEKMANI | RETAINING RING | 2,40mm | | ♦ | ♦ | ♦ | ♦ | ♦ | ♦ | ♦ |
| 83 | K21.06687 | 387 262 2173 | | 1 | 1./GERİ VİTES YILDIZ DİŞLİ SEKMANI | RETAINING RING | 2,45mm | | ♦ | ♦ | ♦ | ♦ | ♦ | ♦ | ♦ |
| 83 | K21.04342 | 007 994 0041 | (387 262 2273) | 1 | 1./GERİ VİTES YILDIZ DİŞLİ SEKMANI | RETAINING RING | 2,50mm | | ♦ | ♦ | ♦ | ♦ | ♦ | ♦ | ♦ |
| 83 | K21.04359 | 387 262 2373 | | 1 | 1./GERİ VİTES YILDIZ DİŞLİ SEKMANI | RETAINING RING | 2,55mm | | ♦ | ♦ | ♦ | ♦ | ♦ | ♦ | ♦ |
| 83 | K21.04345 | 387 262 2473 | | 1 | 1./GERİ VİTES YILDIZ DİŞLİ SEKMANI | RETAINING RING | 2,60mm | | ♦ | ♦ | ♦ | ♦ | ♦ | ♦ | ♦ |
| 83 | K21.07021 | 387 262 2573 | | 1 | 1./GERİ VİTES YILDIZ DİŞLİ SEKMANI | RETAINING RING | 2,65mm | | ♦ | ♦ | ♦ | ♦ | ♦ | ♦ | ♦ |
| 83 | K21.04344 | 387 262 7973 | | 1 | 1./GERİ VİTES YILDIZ DİŞLİ SEKMANI | RETAINING RING | 2,70mm | | ♦ | ♦ | ♦ | ♦ | ♦ | ♦ | ♦ |
| 83 | K21.07022 | 387 262 8073 | | 1 | 1./GERİ VİTES YILDIZ DİŞLİ SEKMANI | RETAINING RING | 2,75mm | | ♦ | ♦ | ♦ | ♦ | ♦ | ♦ | ♦ |
| 83 | K21.06588 | 387 262 8173 | | 1 | 1./GERİ VİTES YILDIZ DİŞLİ SEKMANI | RETAINING RING | 2,80mm | | ♦ | ♦ | ♦ | ♦ | ♦ | ♦ | ♦ |
| 84 | K21.03858 | 022 981 6010 | (022 981 5610) | 1 | GERİ VİTES MASURA BİLYA | NEEDLE CAGE | 75X83X48mm | | ♦ | ♦ | ♦ | ♦ | ♦ | ♦ | ♦ |
| 85 | K21.06330 | 930 262 0033 | | 1 | GERİ VİTES DİŞLİSİ 45 DİŞ | REVERSE GEAR 45 T. | | (A) | ♦ | | | | | | |
| 85 | K21.03587 | 930 262 0133 | (948 262 0233) | 1 | GERİ VİTES DİŞLİSİ 45 DİŞ | REVERSE GEAR 45 T. | | (B)(C) | ♦ | ♦ | ♦ | ♦ | ♦ | ♦ | ♦ |
| 86 | K21.03623 | 014 981 6105 | (016 981 1305) | 1 | KAMALI MİL ARKA BİLYA | ROLLER BEARING | 60X130X33,2mm | (A) | ♦ | | | | | | |
| | | | (014 981 7505) | | | | | | | | | | | | |
| 86 | K21.03661 | 002 981 8181 | | 1 | KAMALI MİL ARKA BİLYA | ROLLER BEARING | 60X130X35,2mm | (B) | ♦ | | ♦ | | | | |
| 87 | K21.03666 | 018 981 6805 | | 1 | KAMALI MİL ARKA BİLYA | ROLLER BEARING | 60X130X51mm | (B) | ♦ | | ♦ | | | | |
| 87 | K21.03861 | 003 980 0202 | | 1 | KAMALI MİL ARKA BİLYA | ROLLER BEARING | 60x130x51mm | (C) | | ♦ | | ♦ | ♦ | ♦ | ♦ |
| 88 | K21.04182 | 389 262 3552 | | 1 | KAMALI MİL ARKA BİLYA RAYNELİ | THRUST WASHER | 0,10mm | | ♦ | ♦ | ♦ | ♦ | ♦ | ♦ | ♦ |
| 88 | K21.04184 | 389 262 3652 | | 1 | KAMALI MİL ARKA BİLYA RAYNELİ | THRUST WASHER | 0,15mm | | ♦ | ♦ | ♦ | ♦ | ♦ | ♦ | ♦ |
| 88 | K21.04152 | 389 262 3752 | | 1 | KAMALI MİL ARKA BİLYA RAYNELİ | THRUST WASHER | 0,20mm | | ♦ | ♦ | ♦ | ♦ | ♦ | ♦ | ♦ |
| 88 | K21.94152 | | | 1 | KAMALI MİL ARKA BİLYA RAYNELİ | THRUST WASHER | 0,30mm | | ♦ | ♦ | ♦ | ♦ | ♦ | ♦ | ♦ |
| 88 | K21.04183 | 389 262 3852 | | 1 | KAMALI MİL ARKA BİLYA RAYNELİ | THRUST WASHER | 0,40mm | | ♦ | ♦ | ♦ | ♦ | ♦ | ♦ | ♦ |
| 88 | K21.94183 | | | 1 | KAMALI MİL ARKA BİLYA RAYNELİ | THRUST WASHER | 0,50mm | | ♦ | ♦ | ♦ | ♦ | ♦ | ♦ | ♦ |
| 88 | K21.84183 | | | 1 | KAMALI MİL ARKA BİLYA RAYNELİ | THRUST WASHER | 0,60mm | | ♦ | ♦ | ♦ | ♦ | ♦ | ♦ | ♦ |
| 88 | K21.74183 | | | 1 | KAMALI MİL ARKA BİLYA RAYNELİ | THRUST WASHER | 0,70mm | | ♦ | ♦ | ♦ | ♦ | ♦ | ♦ | ♦ |
| 88 | K21.04185 | 389 262 3952 | | 1 | KAMALI MİL ARKA BİLYA RAYNELİ | THRUST WASHER | 0,80mm | | ♦ | ♦ | ♦ | ♦ | ♦ | ♦ | ♦ |
| 88 | K21.06718 | 010 990 8382 | | 1 | KAMALI MİL ARKA BİLYA RAYNELİ | THRUST WASHER | 1,00mm | | ♦ | ♦ | ♦ | ♦ | ♦ | ♦ | ♦ |
| 89 | K21.04331 | 007 994 1841 | (006 994 9941) | 1 | KAMALI MİL ARKA BİLYA SEKMANI | RETAINING RING | 2,50mm | | ♦ | ♦ | ♦ | ♦ | ♦ | ♦ | ♦ |
| 90 | K21.03431 | 960 265 0049 | (947 265 0349) | 2 | TAKVİYE HİLAL PABUCU | SLIDING PAD | | | ♦ | ♦ | ♦ | ♦ | ♦ | ♦ | ♦ |
| | | | (389 265 2749) | | | | | | | | | | | | |
| 91 | K21.03565 | 947 265 0449 | | 4 | 1./2./3./GERİ VİTES HİLAL PABUCU | SLIDING PAD | | | ♦ | ♦ | ♦ | ♦ | ♦ | ♦ | ♦ |
| 92 | K21.04307 | 960 265 0774 | (945 265 1274) | 6 | HİLAL CİVATASI | PIN | | | ♦ | ♦ | ♦ | ♦ | ♦ | ♦ | ♦ |
| | | | (945 265 2774) | | | | | | | | | | | | |
| | | | (945 265 2974) | | | | | | | | | | | | |
| 93 | | 930 260 0330 | | 1 | TAKVİYE VİTES HİLALİ | SHIFTING FORK | | | ♦ | | | | | | |
| 94 | | 930 260 0430 | | 1 | 2./ 3.VİTES HİLALİ | SHIFTING FORK | | | ♦ | | | | | | |
| 95 | | 930 265 0201 | | 1 | 1./ R.VİTES HİLALİ | SHIFTING FORK | | | ♦ | | | | | | |
| 96 | | 930 265 0032 | | Kit | VİTES HİLAL ÇITA TAKIMI | REPAIR KIT | | | ♦ | | | | | | |

NOTES :
Parts coded with alphabetic letters are used together.

NOTLAR :
Alfabetik harf ile kodlanan parçalar birlikte kullanılır.





Original parts names, oem numbers, symbols and descriptions used in this catalogue are for reference purposes only.

# GEARBOX G 281-12 KL / 14,93 - 1,0

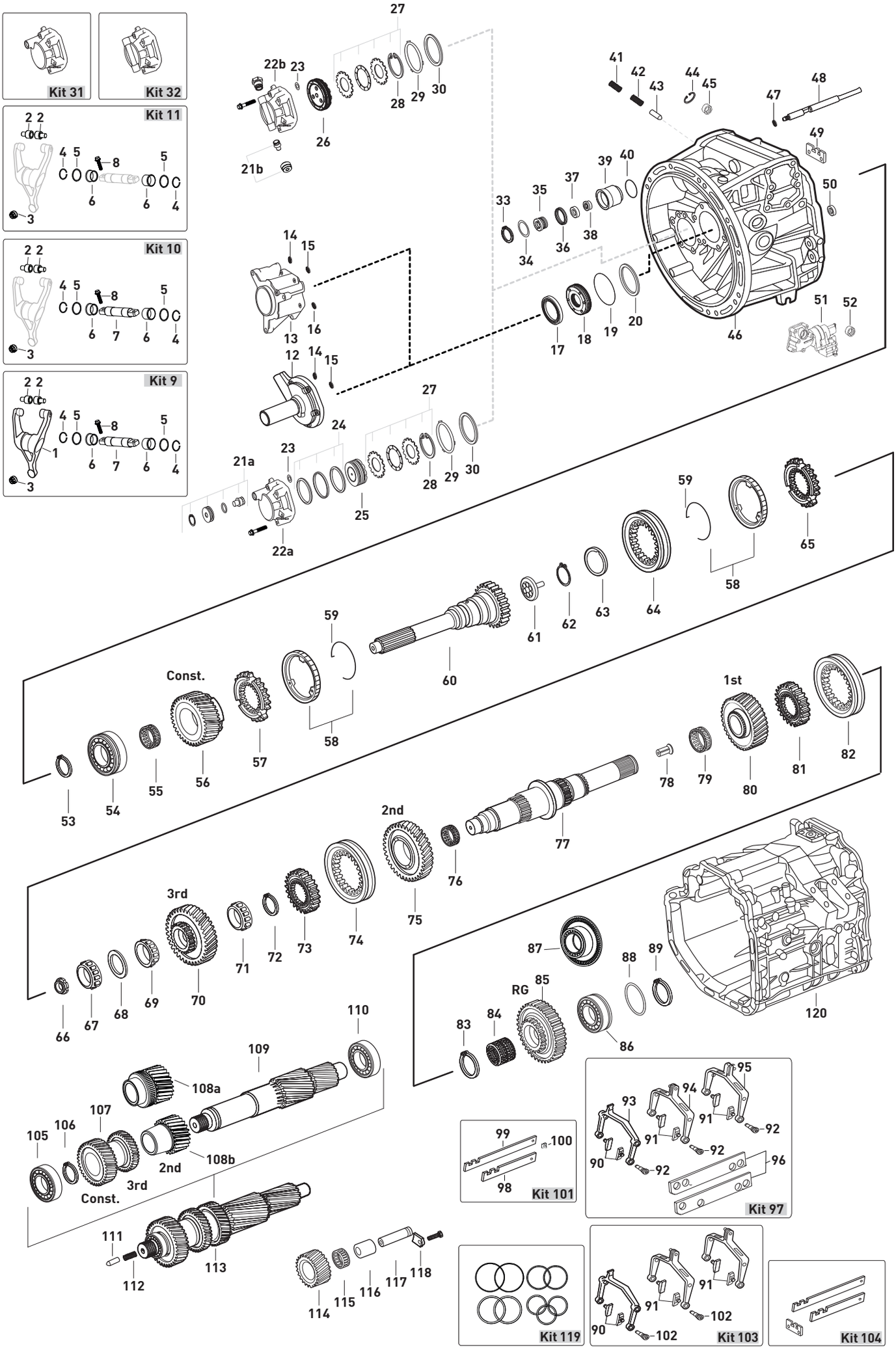




Original parts names, oem numbers, symbols and descriptions used in this catalogue are for reference purposes only.

| Fig. | Kacmaz No | Oem No | Oem Old No | Pcs. | Ürün Tanımı | Description | Sizes | Not | 715370 | 715371 | 715372 | 715374 | 715376 | 715378 | 715379 |
|---|---|---|---|---|---|---|---|---|---|---|---|---|---|---|---|
| 97 | | 930 260 1230 | | Kit | VİTES HİLAL TAKIMI | REPAIR KIT | | | ♦ | | | | | | |
| 98 | | 930 265 1204 | (930 265 0304) | 1 | 2./ 3.VİT.HİLAL ÇITASI | SHIFTING ROD | | | ♦ | | | | | | |
| 99 | | 930 265 0804 | (930 265 0404) | 1 | 1./ R.VİT.HİLAL ÇITASI | SHIFTING ROD | | | ♦ | | | | | | |
| 100 | | 912007 012000 | | 1 | 1./ R.VİT.HİLAL ÇITA KİLİTLEMESİ | BRACKET | | | ♦ | | | | | | |
| 101 | | 930 260 0231 | | 1 | VİTES HİLAL ÇITASI TAKIMI | REPAIR KIT | | | ♦ | | | | | | |
| 102 | K21.04307 | 960 265 0774 | (945 265 1274) | 4 | HİLAL CİVATASI | PIN | | | | ♦ | ♦ | ♦ | ♦ | ♦ | ♦ |
| | | | (945 265 2774) | | | | | | | | | | | | |
| | | | (945 265 2974) | | | | | | | | | | | | |
| 103 | | 960 260 3030 | | Kit | VİTES HİLAL TAKIMI | REPAIR KIT | | | | ♦ | ♦ | ♦ | ♦ | ♦ | ♦ |
| 104 | | 960 260 0231 | | 1 | VİTES HİLAL ÇITASI TAKIMI | REPAIR KIT | | | | ♦ | ♦ | ♦ | ♦ | ♦ | ♦ |
| 105 | K21.03606 | 015 981 9005 | (014 981 1405) | 1 | GRUP MİLİ ÖN BİLYA | ROLLER BEARING | 50,8X100X35mm | | ♦ | ♦ | ♦ | ♦ | ♦ | ♦ | ♦ |
| | | | (012 981 7405) | | | | | | | | | | | | |
| | | | (012 981 5105) | | | | | | | | | | | | |
| 106 | K21.06425 | 389 994 0041 | | 1 | GRUP MİLİ ÖN BİLYA SEKMANI | RETAINING RING | 2,50mm | | ♦ | ♦ | ♦ | ♦ | ♦ | ♦ | ♦ |
| 107 | K21.06373 | 930 263 1310 | | 1 | TAK.VE 3.VİTES DİŞLİ KARŞ.30/36 DİŞ | DOUBLE GEAR Const./3rd | | | ♦ | ♦ | ♦ | ♦ | ♦ | ♦ | ♦ |
| 108a | K21.03599 | 930 263 0812 | | 1 | 2.VİT.DİŞLİ KARŞILIĞI 23 DİŞ (Sensörlü) | GEAR 2nd 23 T (With Sensor) | | | ♦ | ♦ | ♦ | ♦ | ♦ | ♦ | ♦ |
| 108b | K21.06420 | 930 263 0112 | | 1 | 2.VİT.DİŞLİ KARŞILIĞI 23 DİŞ (Sensörsüz) | GEAR 2nd 23 T (W/Out Sensor) | | | ♦ | ♦ | ♦ | ♦ | ♦ | ♦ | ♦ |
| 109 | K21.06341 | 930 263 0402 | | 1 | GRUP MİLİ 15/15/18/16 DİŞ | COUNTER SHAFT 15/15/18/16 T | | | ♦ | ♦ | ♦ | ♦ | ♦ | ♦ | ♦ |
| 110 | K21.03624 | 016 981 1205 | (012 981 9405) | 1 | GRUP MİLİ ARKA BİLYA | ROLLER BEARING | 60X130X33,8mm | | ♦ | ♦ | ♦ | ♦ | ♦ | ♦ | ♦ |
| | | | (012 981 9205) | | | | | | | | | | | | |
| 111 | K21.03492 | 389 267 1174 | (387 267 0074) | 1 | KİLİT FİŞEĞİ | PIN | | | ♦ | ♦ | ♦ | ♦ | ♦ | ♦ | ♦ |
| 112 | K21.03500 | 387 993 4401 | (387 993 2501) | 1 | KİLİT YAYI | SPRING | 9,8X63,3mm | | ♦ | ♦ | ♦ | ♦ | ♦ | ♦ | ♦ |
| 113 | K21.03596 | 930 260 2224 | (930 260 1724) | Kit | GRUP MİLİ KOMPLE (Devir Sensörlü) | COUNTER SHAFT COMPLETE | With Speed Sensor | | ♦ | ♦ | ♦ | ♦ | ♦ | ♦ | ♦ |
| | | | (930 260 0324) | | | | | | | | | | | | |
| | | | (930 260 0024) | | | | | | | | | | | | |
| 113 | K21.06423 | | | Kit | GRUP MİLİ KOMPLE (Devir Sensörsüz) | COUNTER SHAFT COMPLETE | W/Out Speed Sensor | | ♦ | ♦ | ♦ | ♦ | ♦ | ♦ | ♦ |
| 114 | K21.03589 | 930 263 0231 | (930 263 0031) | 1 | KÜÇÜK GERİ VİTES DİŞLİSİ 24 DİŞ | REVERSE IDLER GEAR 24 T. | | | ♦ | ♦ | ♦ | ♦ | ♦ | ♦ | ♦ |
| 115 | K21.03838 | 012 981 8910 | (012 981 9010) | 1 | KÜÇÜK GERİ VİTES MASURA BİLYA | NEEDLE CAGE | 42X50X51mm | | ♦ | ♦ | ♦ | ♦ | ♦ | ♦ | ♦ |
| | | | (019 981 1310) | | | | | | | | | | | | |
| 116 | K21.06031 | 389 263 0850 | | 1 | K.GERİ VİTES MASURA BİLYA ÇANAĞI | BUSHING | 18mm | | ♦ | ♦ | ♦ | ♦ | ♦ | ♦ | ♦ |
| 117 | K21.06037 | 976 263 0030 | (976 263 1230) | 1 | KÜÇÜK GERİ VİTES PİMİ | PIN | | | ♦ | ♦ | ♦ | ♦ | ♦ | ♦ | ♦ |
| 118 | K21.07010 | 945 263 0041 | | 1 | KÜÇÜK GERİ VİTES PİM KİLİTLEMESİ | KEY | | | ♦ | ♦ | ♦ | ♦ | ♦ | ♦ | ♦ |
| 119 | K21.04317 | | | Kit | RAYNEL TAKIMI | WASHER KIT | | | ♦ | ♦ | ♦ | ♦ | ♦ | ♦ | ♦ |
| 120 | | 945 261 4026 | | 1 | ŞANZIMAN ORTA GÖVDE | HOUSING | | | ♦ | | | | | | |
| 120 | | 945 260 7112 | (945 261 6126) | 1 | ŞANZIMAN ORTA GÖVDE | HOUSING | | | ♦ | | | | | | |
| 120 | | 945 261 3926 | | 1 | ŞANZIMAN ORTA GÖVDE | HOUSING | | | ♦ | | | | | | |
| 120 | | 945 261 5326 | | 1 | ŞANZIMAN ORTA GÖVDE | HOUSING | | | ♦ | | ♦ | | | | |
| 120 | | 945 260 7212 | | 1 | ŞANZIMAN ORTA GÖVDE | HOUSING | | | ♦ | | | | | | |
| 120 | | 960 261 5803 | | 1 | ŞANZIMAN ORTA GÖVDE | HOUSING | | | | ♦ | | | ♦ | | |
| 120 | | 960 261 3129 | | 1 | ŞANZIMAN ORTA GÖVDE | HOUSING | | | | ♦ | | | ♦ | | |
| 120 | | 960 261 2629 | | 1 | ŞANZIMAN ORTA GÖVDE | HOUSING | | | | ♦ | | | ♦ | | |
| 120 | | 960 260 9412 | | 1 | ŞANZIMAN ORTA GÖVDE | HOUSING | | | | ♦ | | | ♦ | | |
| 120 | | 960 260 9612 | | 1 | ŞANZIMAN ORTA GÖVDE | HOUSING | | | | | | | | ♦ | |
| 120 | | 960 261 9603 | | 1 | ŞANZIMAN ORTA GÖVDE | HOUSING | | | | | | ♦ | | | |
| 120 | | 960 261 3029 | | 1 | ŞANZIMAN ORTA GÖVDE | HOUSING | | | | | | ♦ | | | |
| 120 | | 960 260 3223 | | 1 | ŞANZIMAN ORTA GÖVDE | HOUSING | | | | ♦ | | | ♦ | | ♦ |

NOTES :
Parts coded with alphabetic letters are used together.

NOTLAR :
Alfabetik harf ile kodlanan parçalar birlikte kullanılır.





Original parts names, oem numbers, symbols and descriptions used in this catalogue are for reference purposes only.

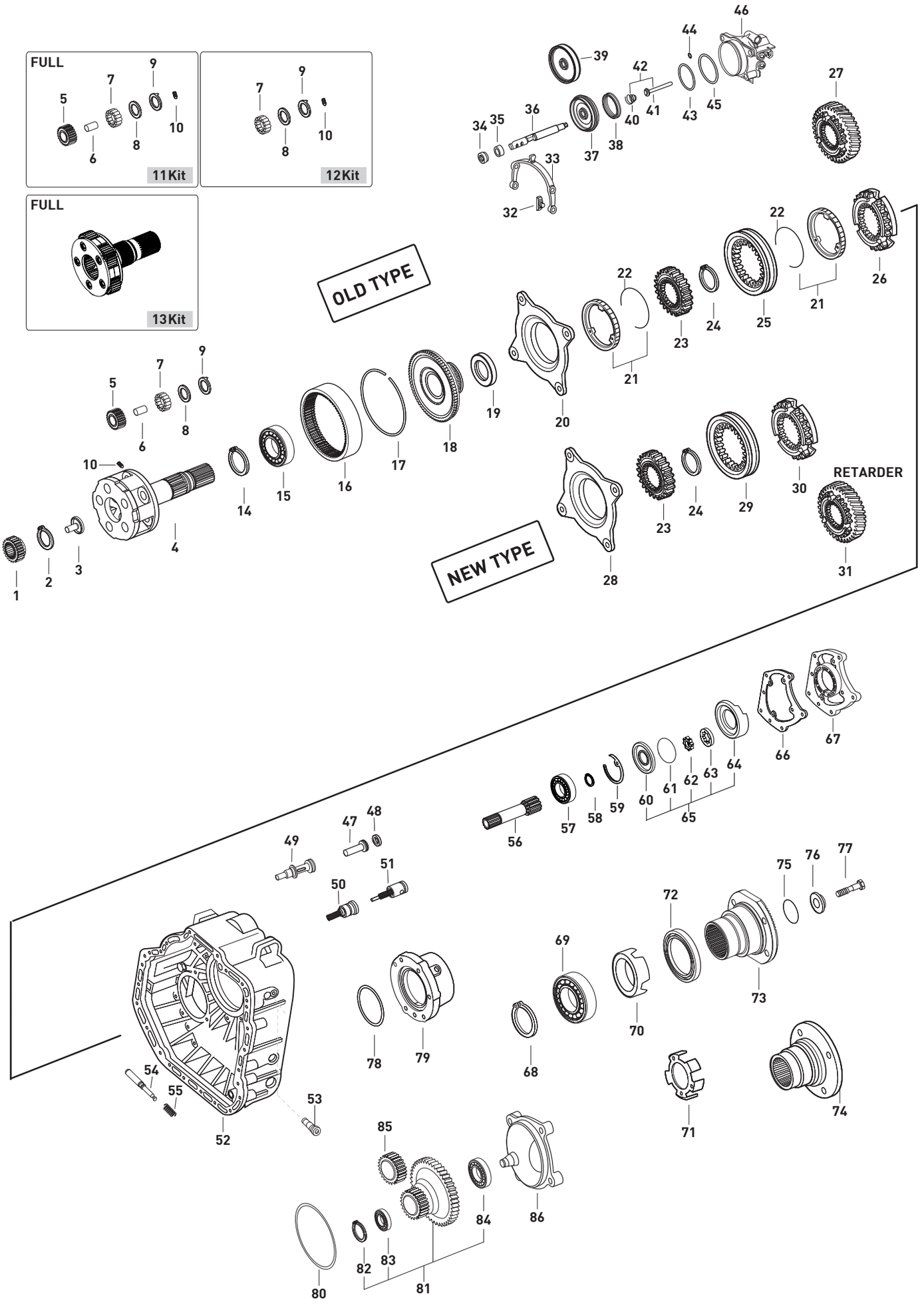






Original parts names, oem numbers, symbols and descriptions used in this catalogue are for reference purposes only.

| Fig. | Kacmaz No | Oem No | Oem Old No | Pcs. | Ürün Tanımı | Description | Sizes | Not | 715370 | 715371 | 715372 | 715374 | 715376 | 715378 | 715379 |
|---|---|---|---|---|---|---|---|---|---|---|---|---|---|---|---|
| 1 | K21.03169 | 945 262 0909 | (389 262 0809) | 1 | GÜNEŞ DİŞLİ 25 DİŞ | SUN GEAR 25 T. | | | ♦ | | ♦ | | | | |
| | | | (389 262 0909) | | | | | | | | | | | | |
| 1 | K21.06506 | 960 262 0009 | (948 262 0209) | 1 | GÜNEŞ DİŞLİ 25 DİŞ | SUN GEAR 25 T. | | | | ♦ | | ♦ | ♦ | ♦ | ♦ |
| 2 | K21.04115 | 000472 060000 | | 1 | HEYKEL YAĞ PİPET SEKMANI | SNAP RING | 2,00mm | | ♦ | ♦ | ♦ | ♦ | | | |
| 3 | K21.03435 | 945 269 0834 | (389 269 4734) | 1 | ŞANZIMAN HEYKELİ YAĞ PİPETİ | OIL TUBE | | | ♦ | ♦ | ♦ | ♦ | | | |
| 4 | K21.03180 | 946 260 3561 | (946 260 3661) | 1 | ŞANZIMAN HEYKELİ (BOŞ) | PLANETARY CARRIER (EMPTY) | | | ♦ | ♦ | ♦ | ♦ | ♦ | ♦ | ♦ |
| | | | (945 260 4561) | | | | | | | | | | | | |
| | | | (945 260 4461) | | | | | | | | | | | | |
| 5 | K21.03436 | 945 262 0006 | | 5 | HEYKEL KOZA DİŞLİSİ 28 DİŞ | PLANETARY GEAR 28 T. | | | ♦ | ♦ | ♦ | ♦ | ♦ | ♦ | ♦ |
| 6 | K21.03437 | 389 262 0407 | | 5 | HEYKEL KOZA DİŞLİ PİMİ | PLANETARY GEAR PIN | | | ♦ | ♦ | ♦ | ♦ | ♦ | ♦ | ♦ |
| 7 | K21.03816 | 000 981 4186 | (000 981 4386) | 125 | HEYKEL KOZA DİŞLİ TANE BİLYA | NEEDLE ROLLER | D5X39,6 | | ♦ | ♦ | ♦ | ♦ | ♦ | ♦ | ♦ |
| 8 | K21.04074 | 389 262 0162 | (389 262 6462) | 10 | HEYKEL KOZA DİŞLİ PULU | THRUST WASHER | | | ♦ | ♦ | ♦ | ♦ | ♦ | ♦ | ♦ |
| | | | (389 262 0562) | | | | | | | | | | | | |
| 9 | K21.04075 | 945 262 1162 | (945 262 0162) | 10 | HEYKEL KOZA DİŞLİ PULU | THRUST WASHER | | | ♦ | ♦ | ♦ | ♦ | ♦ | ♦ | ♦ |
| | | | (389 262 1462) | | | | | | | | | | | | |
| 10 | K21.03418 | 000914 006109 | | 5 | HEYKEL KOZA DİŞLİ VİDASI | THREADED PIN | M6X14 | | ♦ | ♦ | ♦ | ♦ | ♦ | ♦ | ♦ |
| 11 | K21.03178 | 946 260 0097 | (655 260 0197) | Kit | HEYKEL KOZA DİŞLİ TAKIMI | PLANETARY GEAR SET | | | ♦ | ♦ | ♦ | ♦ | ♦ | ♦ | ♦ |
| 12 | K21.03663 | | | Kit | HEYKEL BİLYA VE PUL TAKIMI | WASHER KIT | | | ♦ | ♦ | ♦ | ♦ | ♦ | ♦ | ♦ |
| 13 | K21.06313 | 945 260 4661 | | Kit | ŞANZIMAN HEYKELİ (DOLU) | PLANETARY CARRIER (FULL) | | | ♦ | ♦ | ♦ | ♦ | ♦ | ♦ | ♦ |
| 14 | K21.06864 | 000472 130000 | | 1 | ÇEMBER DİŞLİ BİLYA SEKMANI | RETAINING RING | 130X4mm | | ♦ | ♦ | ♦ | ♦ | ♦ | ♦ | ♦ |
| 15 | K21.03614 | 008 981 1325 | (004 981 8725) | 1 | ÇEMBER DİŞLİ BİLYASI | ROLLER BEARING | 90X130X14mm | | ♦ | ♦ | ♦ | ♦ | ♦ | ♦ | ♦ |
| | | | (004 981 8825) | | | | | | | | | | | | |
| | | | (004 981 9425) | | | | | | | | | | | | |
| 16 | K21.03449 | 945 262 1208 | (945 262 0808) | 1 | ÇEMBER DİŞLİ 85 DİŞ | RING WHEEL 85 T. | | | ♦ | ♦ | ♦ | ♦ | ♦ | ♦ | ♦ |
| 17 | K21.04253 | 389 262 0773 | | 1 | ÇEMBER DİŞLİ SEKMANI | LOCK RING | | | ♦ | ♦ | ♦ | ♦ | ♦ | ♦ | ♦ |
| 18 | K21.03442 | 930 262 0125 | (389 262 1425) | 1 | PLANET ÇAN DİŞLİ 85 DİŞ | CARRIER HUB 85 T. | | | ♦ | ♦ | ♦ | ♦ | ♦ | ♦ | ♦ |
| 19 | K21.04076 | 389 262 0251 | | 1 | ŞANZIMAN HEYKELİ ARA PULU | SPACER RING | | | ♦ | ♦ | ♦ | ♦ | ♦ | ♦ | ♦ |
| 20 | K21.03037 | 947 260 3036 | (947 260 0836) | 1 | TABLA SENKROMENÇ | FOLLOWER RING | | | ♦ | ♦ | ♦ | | ♦ | ♦ | |
| 21 | K21.03185 | 947 260 0945 | | 2 | AĞIR SERİ FRENLEME (Mo) | SYNCHRONIZING CONE / Mo | | | ♦ | ♦ | ♦ | | ♦ | ♦ | |
| 21 | K21.06273 | 947 260 3045 | | 2 | AĞIR SERİ FRENLEME (C) | SYNCHRONIZING CONE / C | | | ♦ | ♦ | ♦ | | ♦ | ♦ | |
| 22 | K21.03077 | 389 262 0293 | | 2 | FRENLEME TELİ | SPRING | | | ♦ | ♦ | ♦ | | ♦ | ♦ | |
| 23 | K21.03079 | 389 262 4935 | (389 262 2035) | 1 | AĞIR SERİ YILDIZ DİŞLİ 73 DİŞ | SYNCHRONIZER HUB 73 T. | | | ♦ | ♦ | ♦ | ♦ | ♦ | ♦ | ♦ |
| | | | (400 262 0335) | | | | | | | | | | | | |
| 24 | K21.04356 | 000471 120000 | | 1 | AĞIR SERİ YILDIZ DİŞLİ SEKMANI | RETAINING RING | | | ♦ | ♦ | ♦ | ♦ | ♦ | ♦ | ♦ |
| 25 | K21.03033 | 945 262 6923 | (930 262 0623) | 1 | AĞIR SERİ HALKA | ENGAGING SLEEVE | | | ♦ | ♦ | ♦ | | ♦ | ♦ | |
| 26 | K21.03186 | 945 262 3834 | | 1 | SERİ SENKROMENÇ | ENGAGING RING | | | ♦ | | ♦ | | | ♦ | |
| 27 | K21.03188 | 930 264 0320 | | 1 | RETARDER DİŞLİSİ 64 DİŞ | RETARDER GEAR 64 T. | | | ♦ | | ♦ | | | ♦ | |
| 27 | K21.06058 | 930 264 0420 | | 1 | RETARDER DİŞLİSİ 59 DİŞ | RETARDER GEAR 59 T. | | | ♦ | | | | | | |
| 28 | K21.06592 | 960 260 2336 | | 1 | TABLA SENKROMENÇ | FOLLOWER RING | | | | ♦ | | ♦ | | | ♦ |
| 29 | K21.06594 | 960 262 1323 | | 1 | AĞIR SERİ HALKA | ENGAGING SLEEVE | | | | ♦ | | ♦ | | | ♦ |
| 30 | | 960 262 2834 | | 1 | SERİ SENKROMENÇ | ENGAGING RING | | | | ♦ | | ♦ | | | ♦ |
| 31 | K21.06565 | 960 264 2720 | | 1 | RETARDER DİŞLİSİ | RETARDER GEAR | | | | ♦ | | | | | ♦ |
| 32 | K21.03431 | 960 265 0049 | (947 265 0349) | 2 | AĞIR SERİ HİLAL PABUCU | SLIDING PAD | | | ♦ | ♦ | ♦ | ♦ | ♦ | ♦ | ♦ |
| | | | (389 265 2749) | | | | | | | | | | | | |
| 33 | K21.06324 | 947 265 1901 | (947 265 0901) | 1 | AĞIR SERİ HİLALİ | SHIFTING FORK | | | ♦ | ♦ | ♦ | ♦ | ♦ | ♦ | |
| 33 | | 960 265 3501 | | 1 | AĞIR SERİ HİLALİ | SHIFTING FORK | | | | ♦ | | ♦ | ♦ | | ♦ |
| 34 | K21.03523 | 000 267 0197 | (000 267 0397) | 1 | AĞIR SERİ HİLAL MİL KEÇESİ | OIL SEAL | 22X32X8mm | | ♦ | ♦ | ♦ | ♦ | ♦ | ♦ | ♦ |
| 35 | K21.04178 | 387 267 0650 | (387 267 0250) | 1 | AĞIR SERİ HİLAL MİL BURCU | BUSHING | 34x22x8mm | | ♦ | ♦ | ♦ | ♦ | ♦ | ♦ | ♦ |
| 36 | | 945 267 2117 | (389 267 7317) | 1 | AĞIR SERİ HİLAL MİLİ | SHIFTING ROD | | | ♦ | ♦ | ♦ | ♦ | ♦ | | |
| 36 | K21.06492 | 930 267 0217 | (945 267 2217) | 1 | AĞIR SERİ HİLAL MİLİ | SHIFTING ROD | | | ♦ | ♦ | ♦ | | ♦ | | |
| 36 | | 960 267 3117 | | 1 | AĞIR SERİ HİLAL MİLİ | SHIFTING ROD | | | | ♦ | | ♦ | ♦ | | ♦ |
| 37 | K21.06499 | 930 267 0618 | | 1 | AĞIR SERİ HİLAL MİL PİSTONU | PISTON | | | ♦ | ♦ | ♦ | ♦ | ♦ | | |
| 38 | K21.03525 | 024 997 8347 | (020 997 6747) | 1 | AĞIR SERİ SİLİNDİR KEÇESİ | SEAL RING | 77X90X17mm | | ♦ | ♦ | ♦ | ♦ | ♦ | | |

NOTES :

NOTLAR :





Original parts names, oem numbers, symbols and descriptions used in this catalogue are for reference purposes only.

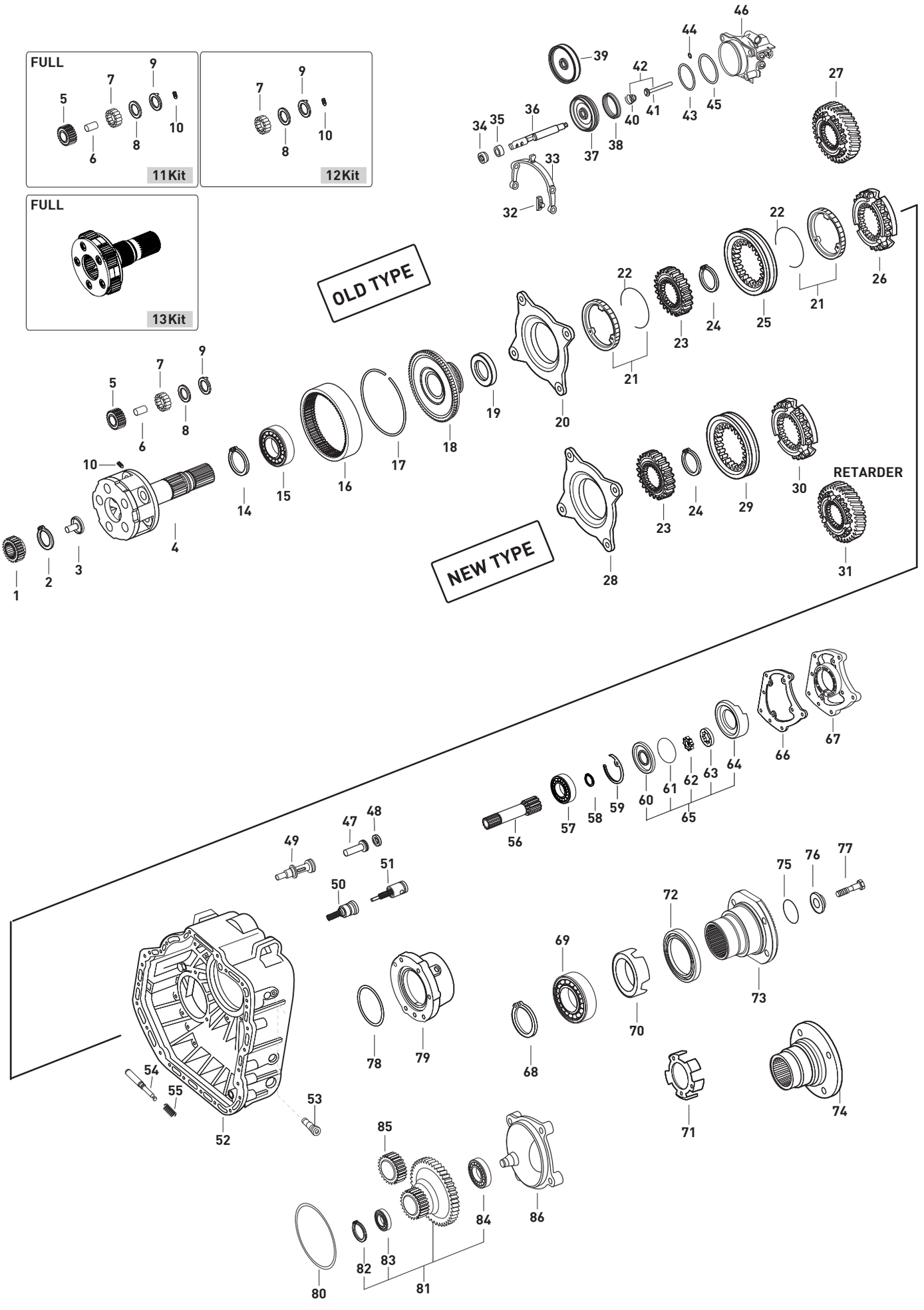






Original parts names, oem numbers, symbols and descriptions used in this catalogue are for reference purposes only.

| Fig. | Kacmaz No | Oem No | Oem Old No | Pcs. | Ürün Tanımı | Description | Sizes | Not | 715370 | 715371 | 715372 | 715374 | 715376 | 715378 | 715379 |
|---|---|---|---|---|---|---|---|---|---|---|---|---|---|---|---|
| 39 | K21.06497 | 960 267 0118 | | 1 | AĞIR SERİ HİLAL MİL PİSTONU | PISTON | tire sticked | | ♦ | ♦ | ♦ | ♦ | ♦ | ♦ | ♦ |
| 40 | K21.04255 | 008 993 0801 | (000 993 6705) | 1 | OKUYUCU MİL YAYI | SPRING | 9,7x7,7x8,1mm | | ♦ | ♦ | ♦ | ♦ | ♦ | ♦ | ♦ |
| 41 | K21.04257 | 000 543 5785 | | 1 | OKUYUCU MİLİ | MAGNETIC PISTON | | | ♦ | ♦ | ♦ | ♦ | ♦ | ♦ | ♦ |
| 42 | K21.07049 | 960 543 0285 | | Kit | OKUYUCU MİL-YAY TAKIMI | REPAIR KIT | | | ♦ | ♦ | ♦ | ♦ | ♦ | ♦ | ♦ |
| 43 | K21.06399 | 013 997 7548 | | 1 | AĞIR SERİ SİLİNDİR ORİNGİ | O-RING | 89,5X3mm | | ♦ | ♦ | ♦ | ♦ | ♦ | ♦ | ♦ |
| 44 | K21.06636 | 015 997 4048 | (020 997 8748) | 1 | AĞIR SERİ SİLİNDİR ORİNGİ | O-RING | 5X3mm | | ♦ | ♦ | ♦ | ♦ | ♦ | ♦ | ♦ |
| 45 | K21.06968 | 017 997 6545 | | 1 | AĞIR SERİ SİLİNDİR ORİNGİ | O-RING | 96X1,5mm | | ♦ | ♦ | ♦ | ♦ | ♦ | ♦ | ♦ |
| 46 | | 002 260 9563 | | 1 | AĞIR SERİ SİLİNDİRİ | SHIFT CYLINDER | | | ♦ | | ♦ | | | ♦ | |
| 46 | | 003 260 5663 | (003 260 3963) | 1 | AĞIR SERİ SİLİNDİRİ | SHIFT CYLINDER | | | | ♦ | | ♦ | ♦ | | ♦ |
| | | | (003 260 4063) | | | | | | | | | | | | |
| 47 | K21.06979 | 389 265 0176 | (389 265 0076) | 1 | YAĞ BASINÇ VALFİ ALIN FİBERİ | WASHER | | | ♦ | | | | | | |
| 48 | K21.04212 | 013 997 0048 | (020 997 8248) | 1 | YAĞ BASINÇ VALF ORİNGİ | O-RING | 19,2X3mm | | ♦ | | | | | | |
| 49 | | 960 260 3257 | (960 260 1157) | 1 | YAĞ BASINÇ VALFİ ALIN FİBERİ | WASHER | | | ♦ | ♦ | | ♦ | ♦ | ♦ | ♦ |
| 50 | K21.06953 | 960 260 1057 | | Kit | YAĞ BASINÇ VALFİ KOMPLE | VALVE KIT | | | ♦ | ♦ | ♦ | ♦ | ♦ | ♦ | ♦ |
| 50 | K21.06988 | 960 260 2257 | | Kit | YAĞ BASINÇ VALFİ KOMPLE | VALVE KIT | | | ♦ | ♦ | ♦ | | ♦ | ♦ | |
| 51 | K21.06973 | 960 260 1257 | | Kit | YAĞ BASINÇ VALFİ KOMPLE | VALVE KIT | | | ♦ | ♦ | ♦ | | ♦ | ♦ | |
| 51 | K21.06989 | 960 260 2157 | (960 260 3757) | Kit | YAĞ BASINÇ VALFİ KOMPLE | VALVE KIT | | | | ♦ | | | | | |
| 52 | | 930 260 6011 | (930 260 1511) | 1 | ŞANZIMAN ARKA GÖVDE | HOUSING | | | ♦ | | | | | ♦ | |
| | | | (930 260 2411) | | | | | | | | | | | | |
| 52 | | 930 260 5911 | (930 260 2311) | 1 | ŞANZIMAN ARKA GÖVDE | HOUSING | | | ♦ | | ♦ | | | | |
| | | | (930 261 1303) | | | | | | | | | | | | |
| 52 | K21.07000 | 960 260 5912 | (960 260 0112) | 1 | ŞANZIMAN ARKA GÖVDE | HOUSING | | | | ♦ | | ♦ | ♦ | ♦ | ♦ |
| 52 | | 960 260 2112 | | 1 | ŞANZIMAN ARKA GÖVDE | HOUSING | | | | ♦ | | | ♦ | | |
| 52 | | 960 260 5423 | (960 260 4923) | 1 | ŞANZIMAN ARKA GÖVDE | HOUSING | | | | ♦ | | | ♦ | | |
| 53 | K21.04307 | 960 265 0774 | (945 265 1274) | 2 | HİLAL CİVATASI | PIN | | | ♦ | ♦ | ♦ | ♦ | ♦ | ♦ | ♦ |
| | | | (945 265 2974) | | | | | | | | | | | | |
| | | | (945 265 2774) | | | | | | | | | | | | |
| 54 | K21.06004 | 945 267 0274 | (389 267 0274) | 1 | AĞIR SERİ KİLİTLEME MİLİ | PIN | | | ♦ | ♦ | ♦ | ♦ | ♦ | ♦ | |
| 54 | | 960 267 0474 | | 1 | AĞIR SERİ KİLİTLEME MİLİ | PIN | | | | | | | | | ♦ |
| 55 | K21.06006 | 389 993 3401 | (389 993 0601) | 1 | AĞIR SERİ KİLİTLEME YAYI | SPRING | | | ♦ | ♦ | ♦ | ♦ | ♦ | ♦ | ♦ |
| 56 | K21.03198 | 947 269 1010 | (945 269 1010) | 1 | YAĞ POMPA MİLİ | OIL PUMP SHAFT | | | ♦ | | ♦ | | | | |
| 56 | K21.06298 | 947 269 1110 | (945 269 1110) | 1 | YAĞ POMPA MİLİ | OIL PUMP SHAFT | | | ♦ | | ♦ | | | | |
| 56 | | 960 269 0010 | | 1 | YAĞ POMPA MİLİ | OIL PUMP SHAFT | | | | ♦ | | ♦ | ♦ | ♦ | ♦ |
| 56 | | 960 269 0110 | | 1 | YAĞ POMPA MİLİ | OIL PUMP SHAFT | | | | ♦ | | | ♦ | ♦ | ♦ |
| 57 | K21.03648 | 010 981 9025 | (010 981 8425) | 1 | PTO MİL BİLYASI | ROLLER BEARING | 17X35X10mm | | ♦ | ♦ | ♦ | ♦ | ♦ | ♦ | ♦ |
| | | | (008 981 5425) | | | | | | | | | | | | |
| 58 | | 912009 045100 | | 1 | PTO MİL BİLYA SEKMANI | RETAINING RING | | | ♦ | ♦ | ♦ | ♦ | ♦ | ♦ | ♦ |
| 59 | K21.94304 | | | 1 | YAĞ POMPA PULU | SPACER WASHER | 0,70mm | | ♦ | ♦ | ♦ | ♦ | ♦ | ♦ | ♦ |
| 59 | K21.04304 | 389 262 6254 | | 1 | YAĞ POMPA PULU | SPACER WASHER | 0,80mm | | ♦ | ♦ | ♦ | ♦ | ♦ | ♦ | ♦ |
| 59 | K21.04303 | 389 262 5954 | | 1 | YAĞ POMPA PULU | SPACER WASHER | 0,90mm | | ♦ | ♦ | ♦ | ♦ | ♦ | ♦ | ♦ |
| 59 | K21.04302 | 389 262 5754 | | 1 | YAĞ POMPA PULU | SPACER WASHER | 1,00mm | | ♦ | ♦ | ♦ | ♦ | ♦ | ♦ | ♦ |
| 59 | K21.04301 | 389 262 5554 | | 1 | YAĞ POMPA PULU | SPACER WASHER | 1,10mm | | ♦ | ♦ | ♦ | ♦ | ♦ | ♦ | ♦ |
| 59 | K21.04305 | 389 262 5354 | | 1 | YAĞ POMPA PULU | SPACER WASHER | 1,20mm | | ♦ | ♦ | ♦ | ♦ | ♦ | ♦ | ♦ |
| 60 | K21.03412 | 945 269 0201 | (389 269 2501) | 1 | YAĞ POMPA KAPAĞI | OIL PUMP COVER | | | ♦ | ♦ | ♦ | ♦ | ♦ | ♦ | ♦ |
| 61 | K21.03511 | 029 997 5748 | | 1 | YAĞ POMPA ORİNGİ | O-RING | 112X2,5mm | | ♦ | ♦ | ♦ | ♦ | ♦ | ♦ | ♦ |
| 62 | K21.03413 | 389 269 1406 | (389 269 1506) | 1 | YAĞ POMPA İÇ ROTOR | OIL PUMP GEAR | | | ♦ | ♦ | ♦ | ♦ | ♦ | ♦ | ♦ |
| | | | (945 260 0090) | | | | | | | | | | | | |
| 63 | K21.03414 | 389 269 0706 | (389 269 1206) | 1 | YAĞ POMPA DIŞ ROTOR | ROTOR | | | ♦ | ♦ | ♦ | ♦ | ♦ | ♦ | ♦ |
| 64 | K21.03478 | 947 269 1001 | | 1 | YAĞ POMPA GÖVDESİ | OIL PUMP HOUSING | | | ♦ | ♦ | ♦ | ♦ | ♦ | ♦ | ♦ |
| 65 | K21.03475 | 389 260 0790 | | 1 | YAĞ POMPASI | OIL PUMP | | | ♦ | ♦ | ♦ | ♦ | ♦ | ♦ | ♦ |
| 66 | K21.03667 | 945 261 0680 | (945 261 0580) | 1 | PTO KAPAK CONTASI | GASKET | | | ♦ | ♦ | ♦ | ♦ | ♦ | ♦ | ♦ |
| | | | (945 261 0080) | | | | | | | | | | | | |
| 67 | K21.03566 | 945 261 1033 | (945 261 1433) | 1 | PTO KAPAĞI | COVER | | | ♦ | ♦ | ♦ | ♦ | ♦ | ♦ | ♦ |

NOTES :

NOTLAR :





Original parts names, oem numbers, symbols and descriptions used in this catalogue are for reference purposes only.

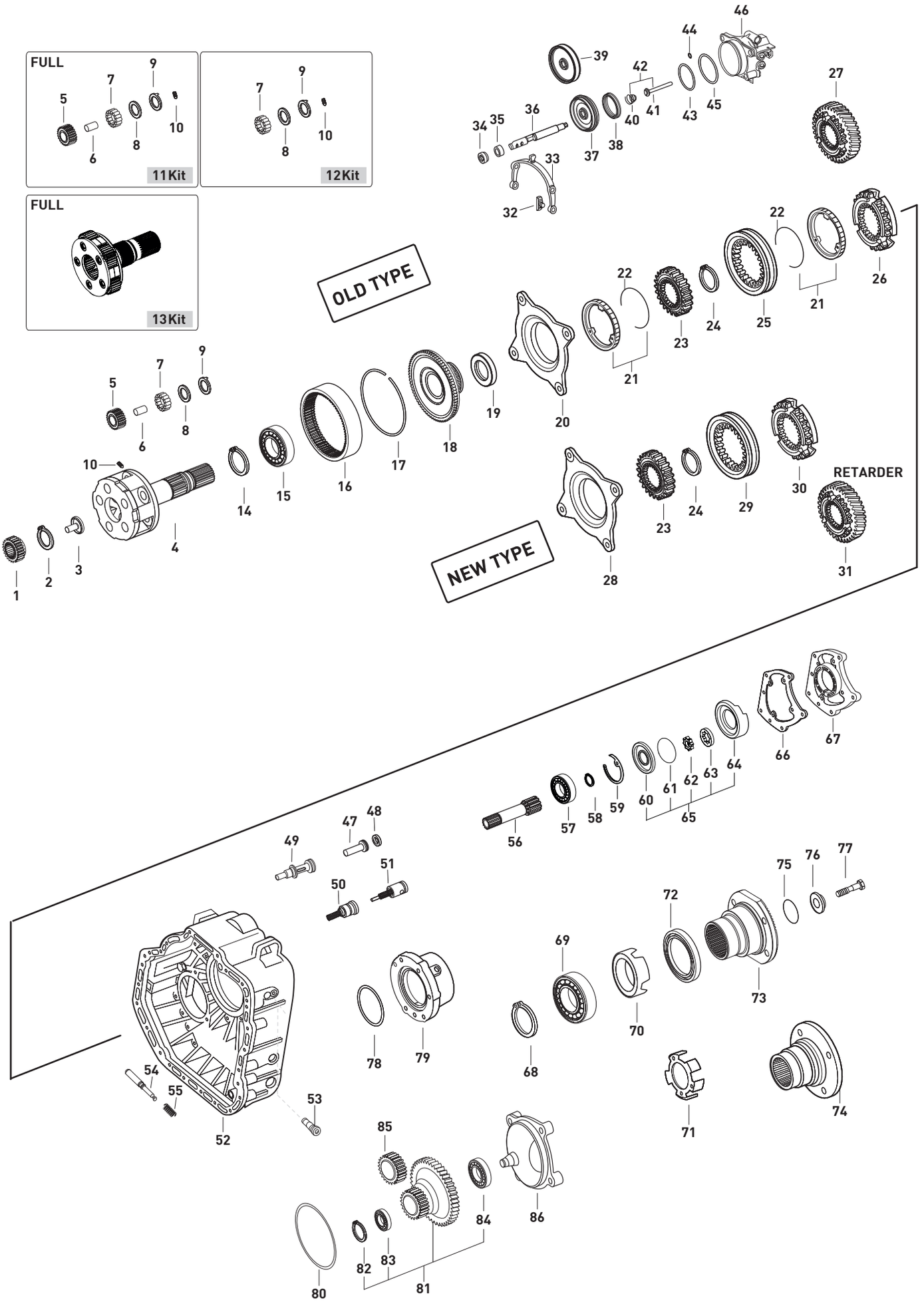






Original parts names, oem numbers, symbols and descriptions used in this catalogue are for reference purposes only.

| Fig. | Kacmaz No | Oem No | Oem Old No | Pcs. | Ürün Tanımı | Description | Sizes | Not | 715370 | 715371 | 715372 | 715374 | 715376 | 715378 | 715379 |
|---|---|---|---|---|---|---|---|---|---|---|---|---|---|---|---|
| 68 | K21.06865 | 000472 150000 | | 1 | ŞANZIMAN HEYKEL BİLYA SEKMANI | RETAINING RING | | | | ♦ | | ♦ | ♦ | ♦ | ♦ |
| 69 | K21.03625 | 008 981 3025 | (008 981 5225) | 1 | ŞANZIMAN ARKA BİLYA | ROLLER BEARING | 80X150X28mm | | ♦ | ♦ | ♦ | ♦ | ♦ | ♦ | ♦ |
| | | | (007 981 3325) | | | | | | | | | | | | |
| 70 | K21.06947 | 930 262 1428 | (930 262 0128) | 1 | ŞANZIMAN KM DEVİR SACI | PULSE STAR | | | ♦ | ♦ | ♦ | ♦ | ♦ | ♦ | ♦ |
| 71 | K21.04144 | 387 262 0928 | | 1 | ŞANZIMAN KM DEVİR SACI | PULSE STAR | | | | ♦ | | | ♦ | | |
| 72 | K21.03512 | 015 997 7846 | (023 997 1647) | 1 | ŞANZIMAN ARKA KEÇE | OIL SEAL | 95X115X15,5mm | | ♦ | ♦ | ♦ | ♦ | ♦ | ♦ | ♦ |
| 73 | K21.03211 | 930 262 0045 | | 1 | ŞANZIMAN FLANŞI | COMPANION FLANGE | 4-H, Ø180mm | | ♦ | | ♦ | | | ♦ | |
| 73 | K21.03195 | 930 262 0145 | | 1 | ŞANZIMAN FLANŞI | COMPANION FLANGE | Ø200mm | | ♦ | | | | | ♦ | |
| 73 | K21.06052 | 945 262 0245 | | 1 | ŞANZIMAN FLANŞI | COMPANION FLANGE | 4-H, Ø200mm | | ♦ | ♦ | | | ♦ | ♦ | |
| 74 | | 945 262 7445 | | 1 | ŞANZIMAN FLANŞI | COMPANION FLANGE | | | | | | ♦ | | | |
| 74 | | 960 262 0045 | | 1 | ŞANZIMAN FLANŞI | COMPANION FLANGE | Ø180mm | | | ♦ | | | ♦ | | ♦ |
| 74 | K21.03196 | 945 262 0045 | | 1 | ŞANZIMAN FLANŞI | COMPANION FLANGE | 4-H, Ø180mm | | ♦ | ♦ | ♦ | | ♦ | ♦ | ♦ |
| 74 | | 947 262 0345 | (976 262 0345) | 1 | ŞANZIMAN FLANŞI | COMPANION FLANGE | Ø150mm | | | ♦ | | | ♦ | | |
| 74 | | 387 264 3445 | | 1 | ŞANZIMAN FLANŞI | COMPANION FLANGE | Ø180mm | | | ♦ | | | ♦ | | |
| 75 | K21.04310 | 014 997 5148 | (020 997 8648) | 1 | ŞANZIMAN FLANŞ ORİNGİ | O-RING | 72,4X5,3mm | | ♦ | | | | | | |
| 75 | | 025 997 5345 | | 1 | ŞANZIMAN FLANŞ ORİNGİ | O-RING | 70,8x5,1mm | | ♦ | ♦ | ♦ | ♦ | ♦ | ♦ | ♦ |
| 76 | K21.04214 | 945 262 0762 | | 1 | ŞANZIMAN FLANŞI ALIN PULU | THRUST WASHER | 93X20mm | | ♦ | ♦ | ♦ | ♦ | ♦ | ♦ | ♦ |
| 77 | K21.06280 | 000000 006750 | (000000 005728) | 1 | ŞANZ.FLANŞI ALIN VİDASI | SCREW | M20X1,5X80 | | ♦ | ♦ | ♦ | ♦ | ♦ | ♦ | ♦ |
| 78 | K21.06713 | 015 997 2848 | (020 997 8548) | 1 | ŞANZIMAN ARKA KAPAK ORİNGİ | O-RING | 149,5X3mm | | ♦ | | ♦ | | | ♦ | |
| 79 | K21.06238 | 389 261 1920 | (389 261 2020) | 1 | ŞANZIMAN ARKA KAPAK | COVER | | | ♦ | | ♦ | | | ♦ | |
| 79 | K21.06239 | 930 261 0420 | (930 261 0520) | 1 | ŞANZIMAN ARKA KAPAK | COVER | | RETARDER | ♦ | | ♦ | | | ♦ | |
| | | | (389 261 1820) | | | | | | | | | | | | |
| 80 | | 017 997 9145 | (028 997 8148) | 1 | ŞANZIMAN ARKA KAPAK ORİNGİ | O-RING | 198X3mm | | ♦ | | ♦ | | | ♦ | |
| 81 | K21.06311 | 930 264 0921 | | 1 | DİREKSİYON POMPA DİŞLİSİ | GEAR | | | ♦ | | ♦ | | | ♦ | |
| 82 | | 000983 020000 | | 1 | DİR.POMPA DİŞLİ BİLYA SEKMANI | RETAINING RING | | | ♦ | | ♦ | | | ♦ | |
| 83 | | 000625 006004 | | 1 | DİREKSİYON POMPA DİŞLİ ÖN BİLYA | ROLLER BEARING | | | ♦ | | ♦ | | | ♦ | |
| 84 | | 000625 506007 | | 1 | DİREKSİYON POMPA DİŞLİ ARKA BİLYA | ROLLER BEARING | | | ♦ | | ♦ | | | ♦ | |
| 85 | K21.03671 | 930 264 0721 | | 1 | DİREKSİYON POMPA DİŞLİ KARŞILIĞI | GEAR | | | ♦ | | ♦ | | | ♦ | |
| 86 | K21.06300 | 930 264 0111 | (930 264 0211) | 1 | DİREKSİYON POMPA KAPAĞI | HOUSING | | | ♦ | | ♦ | | | ♦ | |

NOTES :

NOTLAR :





Original parts names, oem numbers, symbols and descriptions used in this catalogue are for reference purposes only.

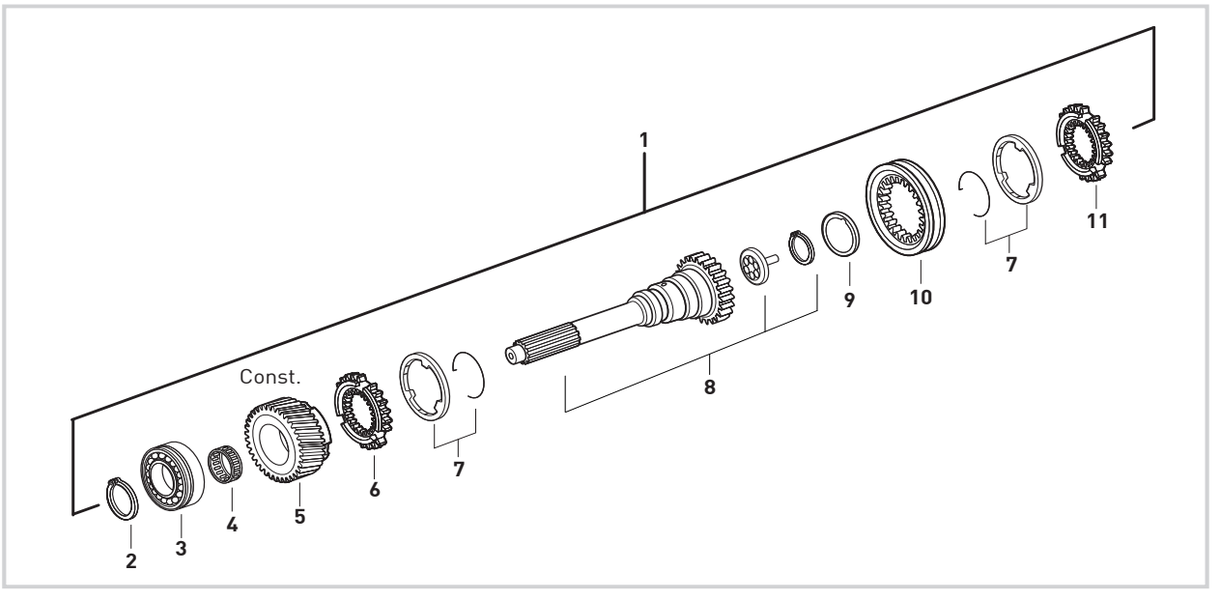


| Fig. | Kacmaz No. | Oem No | Oem Old No | Pcs. | Ürün Tanımı | Description | Sizes |
|---|---|---|---|---|---|---|---|
| 1 | K21.03573 | | | Kit | PRİZDİREK KOMPLE | INPUT SHAFT COMPLETE | |
| 2 | K21.04346 | 387 262 8773 | | 1 | PRİZDİREK ÖN BİLYA SEKMANI | RETAINING RING | 3,20mm |
| 3 | K21.03618 | 011 981 1305 | (014 981 9005) | 1 | PRİZDİREK ÖN BİLYA | ROLLER BEARING | 75X140X34,25mm |
| 4 | K21.03855 | 022 981 7910 | (022 981 5310) | 1 | TAKVİYE MASURA BİLYA | NEEDLE CAGE | 84X90X55mm |
| 5 | K21.03574 | 960 262 0617 | (960 262 0517) | 1 | TAKVİYE DİŞLİSİ 29 DİŞ | CONSTANT GEAR 29 T. | |
| 6 | K21.03146 | 945 262 8234 | (945 262 5434) | 1 | TAKVİYE SENKROMENÇ | ENGAGING RING | |
| 7 | K21.06299 | 947 260 3545 | (947 260 5145) | 2 | TAKVİYE FRENLEME (C) | SYNCHRONIZING CONE / C | |
| 8 | K21.03575 | 960 262 5802 | (930 262 0403) | 1 | PRİZDİREK 66 DİŞ | INPUT SHAFT 66 T. | |
| 9 | K21.03513 | 001 262 0262 | (000 262 8662) | 1 | PRİZDİREK ARKA KEÇE | OIL SEAL | 73,5X101X7mm |
| 10 | K21.03151 | 945 262 6523 | (930 262 0523) | 1 | TAKVİYE HALKA | ENGAGING SLEEVE | |
| 11 | K21.03576 | 930 262 0234 | (930 262 0034) | 1 | TAKVİYE SENKROMENÇ | ENGAGING RING | |



**Original parts names, oem numbers, symbols and descriptions used in this catalogue are for reference purposes only.**

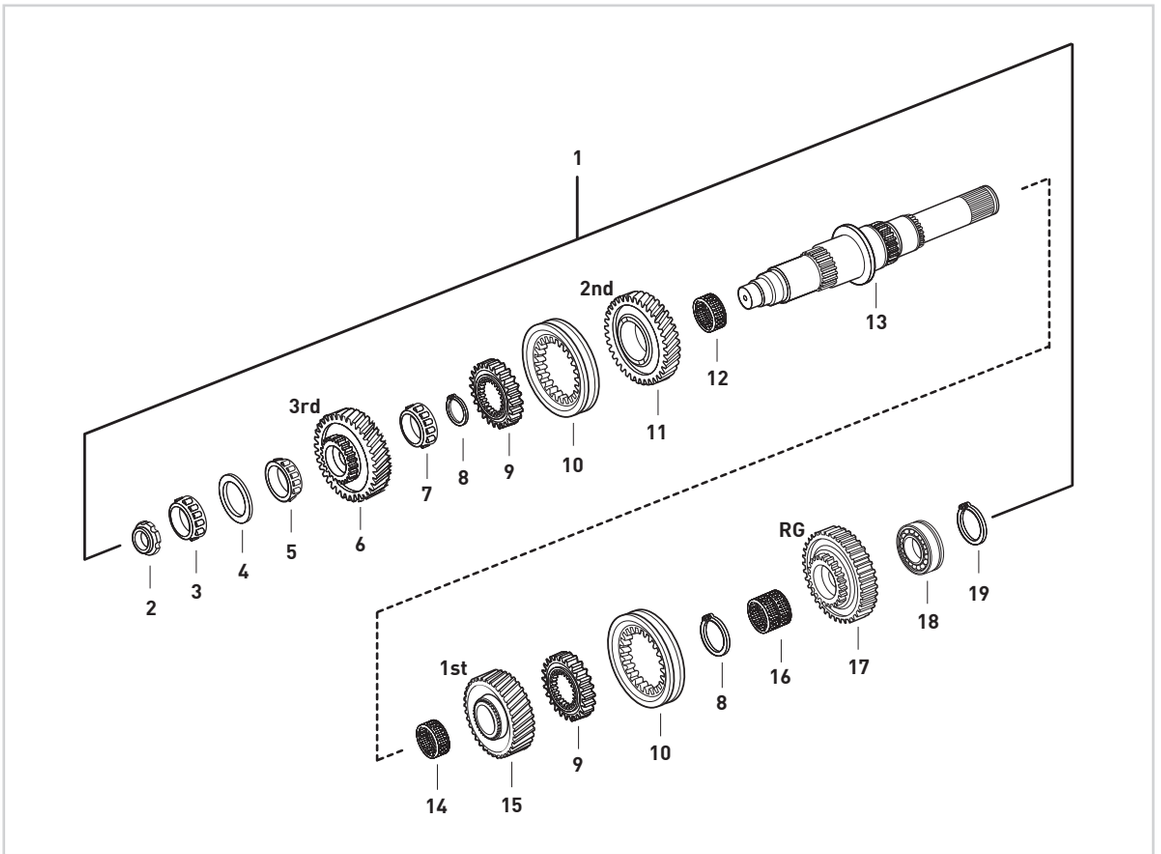


| Fig. | Kacmaz No. | Oem No | Oem Old No | Pcs. | Ürün Tanımı | Description | Sizes |
|---|---|---|---|---|---|---|---|
| 1 | K21.06671 | | | Kit | KAMALI MİL KOMPLE | MAIN SHAFT COMPLETE | |
| 2 | K21.03432 | 945 990 0250 | (945 990 0150) | 1 | KAMALI MİL SOMUNU | NUT | M30X1,5 |
| 3 | K21.03632 | 020 981 5205 | (017 981 1305) | 1 | KAMALI MİL UÇ BİLYA | ROLLER BEARING | 39,69X40,39mm |
| 4 | K21.04025 | 389 262 3252 | | 1 | KAMALI MİL AYAR PULU | THRUST WASHER | 2,00mm |
| 5 | K21.03620 | 017 981 5105 | (015 981 6105) | 1 | 3.VİTES DİŞLİ ÖN BİLYA | ROLLER BEARING | 50X41,3mm |
| 6 | K21.03580 | 960 262 1017 | (930 262 3617) | 1 | 3.VİTES DİŞLİSİ 31 DİŞ | GEAR 3rd 31 T. | |
| 7 | K21.03664 | 017 981 7105 | | 1 | 3.VİTES DİŞLİ ARKA BİLYA | ROLLER BEARING | 55X29,8mm |
| 8 | K21.04344 | 387 262 7973 | | 2 | 2./3 VİTES YILDIZ DİŞLİ SEG. | RETAINING RING | 2,70mm |
| 9 | K21.03581 | 960 262 3135 | (945 262 3635) | 2 | 1./2./3./GERİ VİTES YILDIZ DİŞLİ | SYNCHRONIZER HUB | |
| 10 | K21.03582 | 960 262 1523 | (930 262 0123) | 2 | 1./2./3./GERİ VİTES HALKA | ENGAGING SLEEVE | |
| 11 | K21.03583 | 930 262 0112 | (930 262 0612) | 1 | 2.VİTES DİŞLİSİ 38 DİŞ | GEAR 2nd 38 T. | |
| 12 | K21.03859 | 023 981 5210 | (022 981 5810) | 1 | 2.VİTES MASURA BİLYA | NEEDLE CAGE | 85X93X60mm |
| 13 | K21.03584 | 930 262 0805 | (930 262 2205) | 1 | KAMALI MİL | MAIN SHAFT | |
| 14 | K21.06369 | 024 981 2410 | (022 981 5910) | 1 | 1.VİTES MASURA BİLYA | NEEDLE CAGE | 85X93X73mm |
| 15 | K21.03586 | 930 262 0511 | (930 262 0811) | 1 | 1.VİTES DİŞLİSİ 41 DİŞ | GEAR 1st 41 T. | |
| 16 | K21.03858 | 022 981 6010 | (022 981 5610) | 1 | GERİ VİTES MASURA BİLYA | NEEDLE CAGE | 75X83X48mm |
| 17 | K21.03587 | 930 262 0133 | (948 262 0233) | 1 | GERİ VİTES DİŞLİSİ 45 DİŞ | REVERSE GEAR 45 T. | |
| 18 | K21.03661 | 002 981 8181 | | 1 | KAMALI MİL ARKA BİLYA | ROLLER BEARING | 60X130X35,2mm |
| 19 | K21.04331 | 007 994 1841 | (006 994 9941) | 1 | KAMALI MİL ARKA BİLYA SEKMANI | RETAINING RING | 2,50mm |



Original parts names, oem numbers, symbols and descriptions used in this catalogue are for reference purposes only.

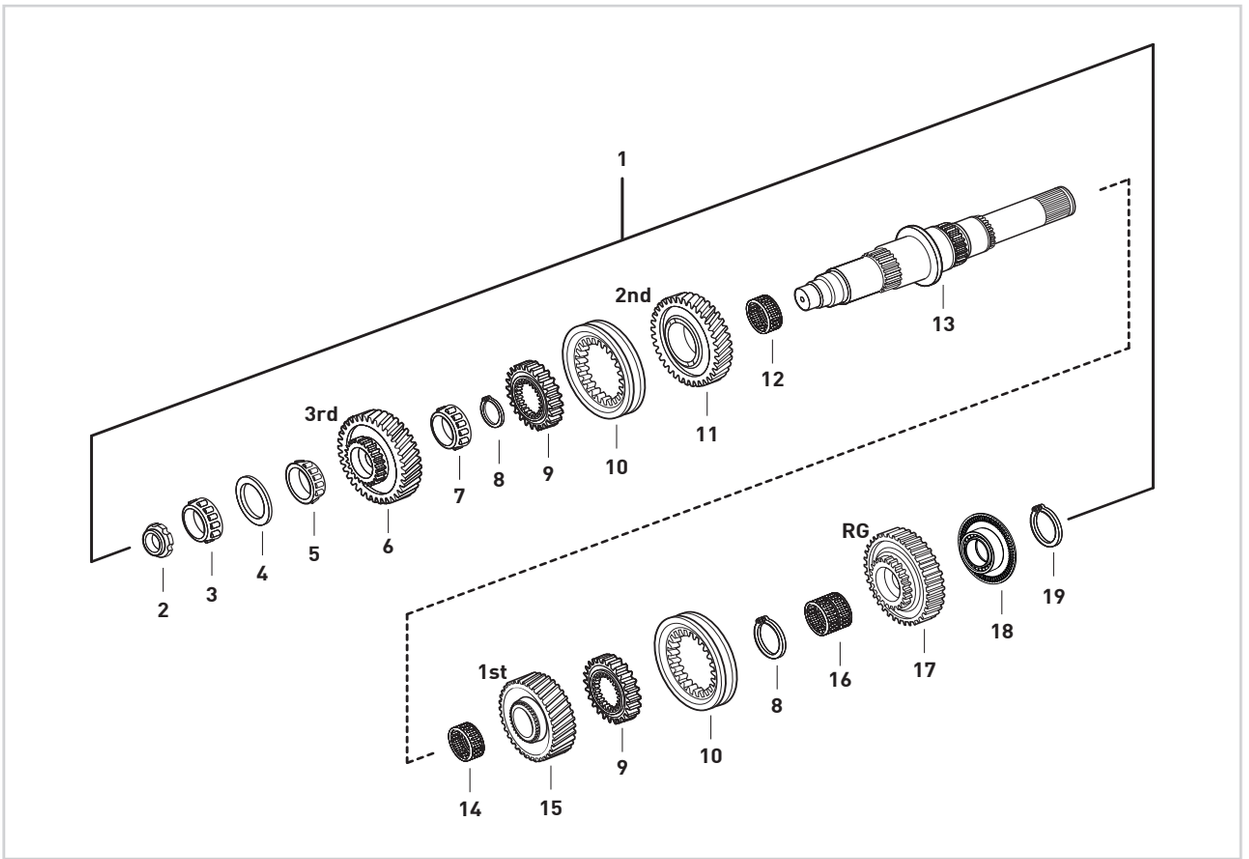


| Fig. | Kacmaz No. | Oem No | Oem Old No | Pcs. | Ürün Tanımı | Description | Sizes |
|---|---|---|---|---|---|---|---|
| 1 | K21.06368 | | | Kit | KAMALI MİL KOMPLE | MAIN SHAFT COMPLETE | |
| 2 | K21.03432 | 945 990 0250 | (945 990 0150) | 1 | KAMALI MİL SOMUNU | NUT | M30X1,5 |
| 3 | K21.03632 | 020 981 5205 | (017 981 1305) | 1 | KAMALI MİL UÇ BİLYA | ROLLER BEARING | 39,69X40,39mm |
| 4 | K21.04093 | 389 262 2355 | | 1 | KAMALI MİL AYAR PULU | THRUST WASHER | 1,79mm |
| 5 | K21.03620 | 017 981 5105 | (015 981 6105) | 1 | 3.VİTES DİŞLİ ÖN BİLYA | ROLLER BEARING | 50X41,3mm |
| 6 | K21.03580 | 960 262 1017 | (930 262 3617) | 1 | 3.VİTES DİŞLİSİ 31 DİŞ | GEAR 3rd 31 T. | |
| 7 | K21.03664 | 017 981 7105 | | 1 | 3.VİTES DİŞLİ ARKA BİLYA | ROLLER BEARING | 55X29,8mm |
| 8 | K21.04344 | 387 262 7973 | | 2 | 2./3 VİTES YILDIZ DİŞLİ SEG. | RETAINING RING | 2,70mm |
| 9 | K21.03581 | 960 262 3135 | (945 262 3635) | 2 | 1./2./3./GERİ VİTES YILDIZ DİŞLİ | SYNCHRONIZER HUB | |
| 10 | K21.03582 | 960 262 1523 | (930 262 0123) | 2 | 1./2./3./GERİ VİTES HALKA | ENGAGING SLEEVE | |
| 11 | K21.03583 | 930 262 0112 | (930 262 0612) | 1 | 2.VİTES DİŞLİSİ 38 DİŞ | GEAR 2nd 38 T. | |
| 12 | K21.03859 | 023 981 5210 | (022 981 5810) | 1 | 2.VİTES MASURA BİLYA | NEEDLE CAGE | 85X93X60mm |
| 13 | K21.03584 | 930 262 0805 | (930 262 2205) | 1 | KAMALI MİL | MAIN SHAFT | |
| 14 | K21.06369 | 024 981 2410 | (022 981 5910) | 1 | 1.VİTES MASURA BİLYA | NEEDLE CAGE | 85X93X73mm |
| 15 | K21.03586 | 930 262 0511 | (930 262 0811) | 1 | 1.VİTES DİŞLİSİ 41 DİŞ | GEAR 1st 41 T. | |
| 16 | K21.03858 | 022 981 6010 | (022 981 5610) | 1 | GERİ VİTES MASURA BİLYA | NEEDLE CAGE | 75X83X48mm |
| 17 | K21.03587 | 930 262 0133 | (948 262 0233) | 1 | GERİ VİTES DİŞLİSİ 45 DİŞ | REVERSE GEAR 45 T. | |
| 18 | K21.03666 | 018 981 6805 | | 1 | KAMALI MİL ARKA BİLYA | ROLLER BEARING | 60X130X51mm |
| 19 | K21.04331 | 007 994 1841 | (006 994 9941) | 1 | KAMALI MİL ARKA BİLYA SEKMANI | RETAINING RING | 2,50mm |



**Original parts names, oem numbers, symbols and descriptions used in this catalogue are for reference purposes only.**

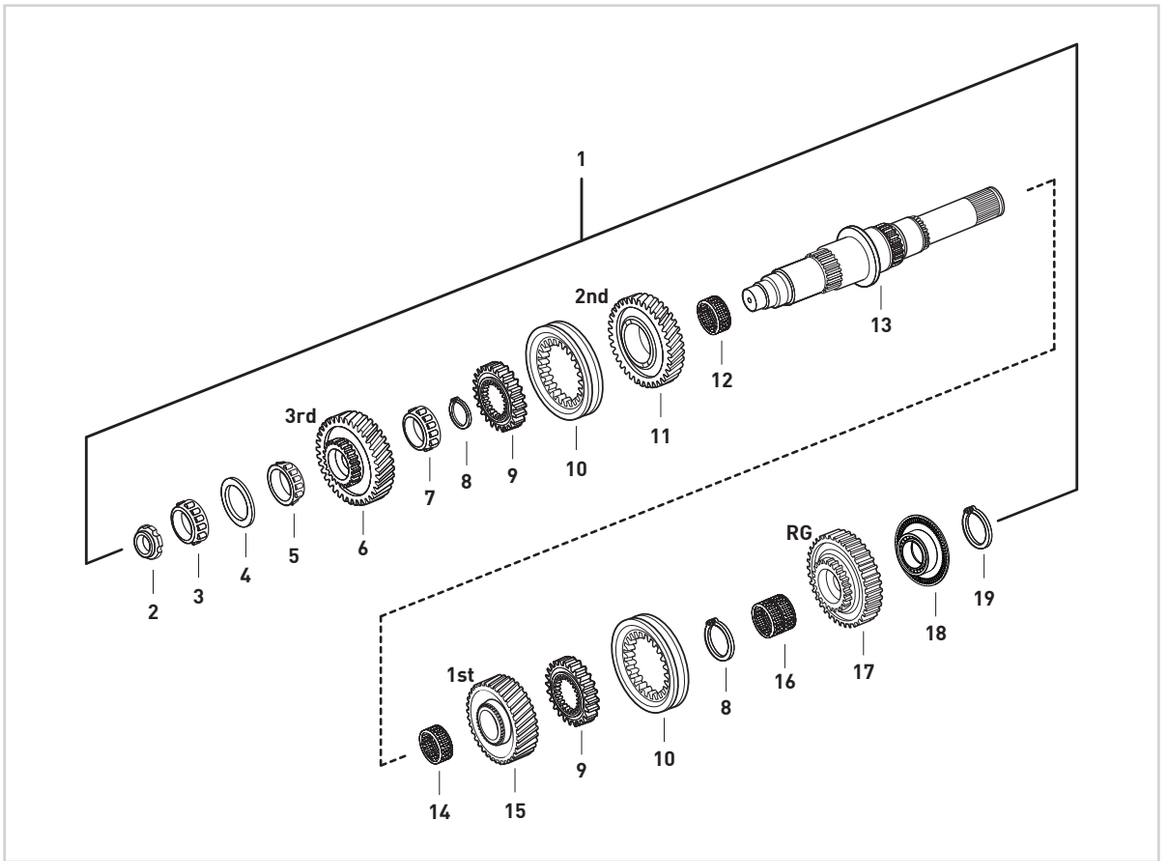


| Fig. | Kacmaz No. | Oem No | Oem Old No | Pcs. | Ürün Tanımı | Description | Sizes |
|---|---|---|---|---|---|---|---|
| 1 | K21.06674 | | | Kit | KAMALI MİL KOMPLE | MAIN SHAFT COMPLETE | |
| 2 | K21.03432 | 945 990 0250 | (945 990 0150) | 1 | KAMALI MİL SOMUNU | NUT | M30X1,5 |
| 3 | K21.03632 | 020 981 5205 | (017 981 1305) | 1 | KAMALI MİL UÇ BİLYA | ROLLER BEARING | 39,69X40,39mm |
| 4 | K21.04025 | 389 262 3252 | | 1 | KAMALI MİL AYAR PULU | THRUST WASHER | 2,00mm |
| 5 | K21.03620 | 017 981 5105 | (015 981 6105) | 1 | 3.VİTES DİŞLİ ÖN BİLYA | ROLLER BEARING | 50X41,3mm |
| 6 | K21.03580 | 960 262 1017 | (930 262 3617) | 1 | 3.VİTES DİŞLİSİ 31 DİŞ | GEAR 3rd 31 T. | |
| 7 | K21.03664 | 017 981 7105 | | 1 | 3.VİTES DİŞLİ ARKA BİLYA | ROLLER BEARING | 55X29,8mm |
| 8 | K21.04344 | 387 262 7973 | | 2 | 2./3 VİTES YILDIZ DİŞLİ SEG. | RETAINING RING | 2,70mm |
| 9 | K21.03581 | 960 262 3135 | (945 262 3635) | 2 | 1./2./3./GERİ VİTES YILDIZ DİŞLİ | SYNCHRONIZER HUB | |
| 10 | K21.03582 | 960 262 1523 | (930 262 0123) | 2 | 1./2./3./GERİ VİTES HALKA | ENGAGING SLEEVE | |
| 11 | K21.03583 | 930 262 0112 | (930 262 0612) | 1 | 2.VİTES DİŞLİSİ 38 DİŞ | GEAR 2nd 38 T. | |
| 12 | K21.03859 | 023 981 5210 | (022 981 5810) | 1 | 2.VİTES MASURA BİLYA | NEEDLE CAGE | 85X93X60mm |
| 13 | K21.06980 | 960 262 0105 | (960 262 3805) | 1 | KAMALI MİL | MAIN SHAFT | |
| | | | (948 262 0205) | | | | |
| 14 | K21.06369 | 024 981 2410 | (022 981 5910) | 1 | 1.VİTES MASURA BİLYA | NEEDLE CAGE | 85X93X73mm |
| 15 | K21.03586 | 930 262 0511 | (930 262 0811) | 1 | 1.VİTES DİŞLİSİ 41 DİŞ | GEAR 1st 41 T. | |
| 16 | K21.03858 | 022 981 6010 | (022 981 5610) | 1 | GERİ VİTES MASURA BİLYA | NEEDLE CAGE | 75X83X48mm |
| 17 | K21.03587 | 930 262 0133 | (948 262 0233) | 1 | GERİ VİTES DİŞLİSİ 45 DİŞ | REVERSE GEAR 45 T. | |
| 18 | K21.03861 | 003 980 0202 | | 1 | KAMALI MİL ARKA BİLYA | ROLLER BEARING | 60x130x51mm |
| 19 | K21.04331 | 007 994 1841 | (006 994 9941) | 1 | KAMALI MİL ARKA BİLYA SEKMANI | RETAINING RING | 2,50mm |



Original parts names, oem numbers, symbols and descriptions used in this catalogue are for reference purposes only.

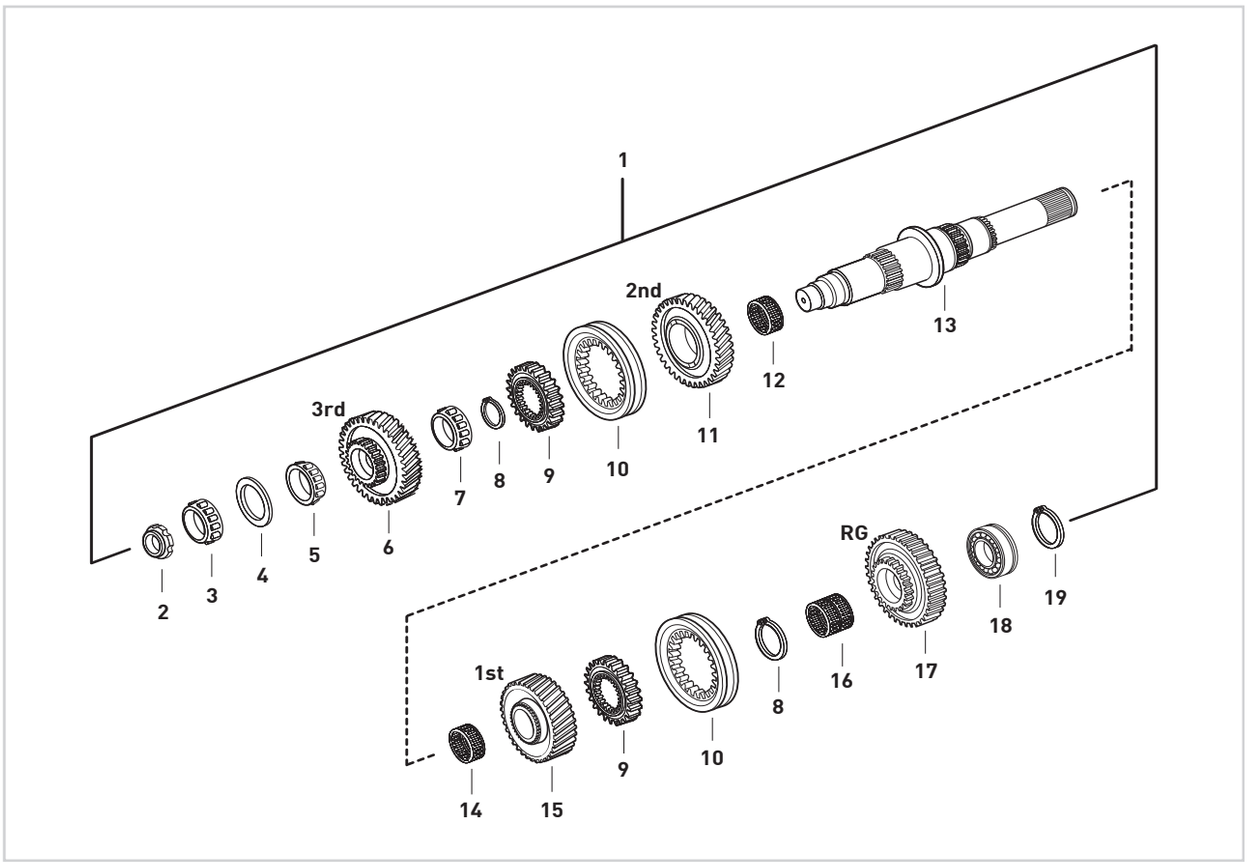


| Fig. | Kacmaz No. | Oem No | Oem Old No | Pcs. | Ürün Tanımı | Description | Sizes |
|---|---|---|---|---|---|---|---|
| 1 | K21.06370 | | | Kit | KAMALI MİL KOMPLE | MAIN SHAFT COMPLETE | |
| 2 | K21.03432 | 945 990 0250 | (945 990 0150) | 1 | KAMALI MİL SOMUNU | NUT | M30X1, |
| 3 | K21.03632 | 020 981 5205 | (017 981 1305) | 1 | KAMALI MİL UÇ BİLYA | ROLLER BEARING | 39,69X40,39mr |
| 4 | K21.04025 | 389 262 3252 | | 1 | KAMALI MİL AYAR PULU | THRUST WASHER | 2,00mr |
| 5 | K21.03620 | 017 981 5105 | (015 981 6105) | 1 | 3.VİTES DİŞLİ ÖN BİLYA | ROLLER BEARING | 50X41,3mr |
| 6 | K21.03580 | 960 262 1017 | (930 262 3617) | 1 | 3.VİTES DİŞLİSİ 31 DİŞ | GEAR 3rd 31 T. | |
| 7 | K21.03664 | 017 981 7105 | | 1 | 3.VİTES DİŞLİ ARKA BİLYA | ROLLER BEARING | 55X29,8mr |
| 8 | K21.04344 | 387 262 7973 | | 2 | 2./3 VİTES YILDIZ DİŞLİ SEG. | RETAINING RING | 2,70mr |
| 9 | K21.03581 | 960 262 3135 | (945 262 3635) | 2 | 1./2./3./GERİ VİTES YILDIZ DİŞLİ | SYNCHRONIZER HUB | |
| 10 | K21.03582 | 960 262 1523 | (930 262 0123) | 2 | 1./2./3./GERİ VİTES HALKA | ENGAGING SLEEVE | |
| 11 | K21.03583 | 930 262 0112 | (930 262 0612) | 1 | 2.VİTES DİŞLİSİ 38 DİŞ | GEAR 2nd 38 T. | |
| 12 | K21.03859 | 023 981 5210 | (022 981 5810) | 1 | 2.VİTES MASURA BİLYA | NEEDLE CAGE | 85X93X60mr |
| 13 | K21.06331 | 930 262 0205 | | 1 | KAMALI MİL | MAIN SHAFT | |
| 14 | K21.06369 | 024 981 2410 | (022 981 5910) | 1 | 1.VİTES MASURA BİLYA | NEEDLE CAGE | 85X93X73mr |
| 15 | K21.03586 | 930 262 0511 | (930 262 0811) | 1 | 1.VİTES DİŞLİSİ 41 DİŞ | GEAR 1st 41 T. | |
| 16 | K21.03858 | 022 981 6010 | (022 981 5610) | 1 | GERİ VİTES MASURA BİLYA | NEEDLE CAGE | 75X83X48mr |
| 17 | K21.06330 | 930 262 0033 | | 1 | GERİ VİTES DİŞLİSİ 45 DİŞ | REVERSE GEAR 45 T. | |
| 18 | K21.03623 | 014 981 6105 | (016 981 1305) | 1 | KAMALI MİL ARKA BİLYA | ROLLER BEARING | 60X130X33,2mr |
| 19 | K21.04331 | 007 994 1841 | (006 994 9941) | 1 | KAMALI MİL ARKA BİLYA SEKMANI | RETAINING RING | 2,50mr |



**Original parts names, oem numbers, symbols and descriptions used in this catalogue are for reference purposes only.**

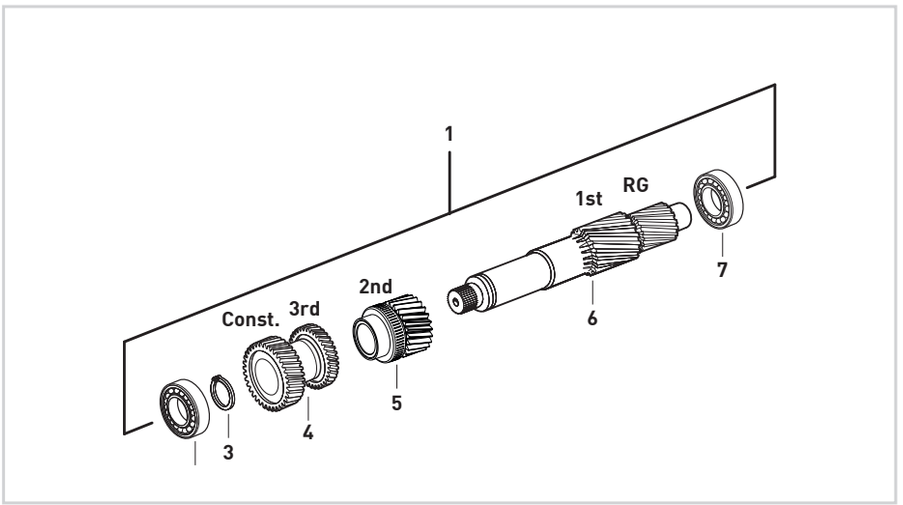


| Fig. | Kacmaz No. | Oem No | Oem Old No | Pcs. | Ürün Tanımı | Description |
|---|---|---|---|---|---|---|
| 1 | K21.03596 | 930 260 2224 | (930 260 1724) | Kit | GRUP MİLİ KOMPLE (Devir Sensörlü) | COUNTER SHAFT COMPLETE (With Speed Sensor) |
| | | | (930 260 0324) | | | |
| | | | (930 260 0024) | | | |
| 2 | K21.03606 | 015 981 9005 | (014 981 1405) | 1 | GRUP MİLİ ÖN BİLYA | ROLLER BEARING 50,8X100X35mm |
| 3 | K21.06425 | 389 994 0041 | | 1 | GRUP MİLİ ÖN BİLYA SEKMANI | RETAINING RING 2,50mm |
| 4 | K21.06373 | 930 263 1310 | | 1 | TAK.VE 3.VİTES DİŞLİ KARŞ.30/36 DİŞ | DOUBLE GEAR Const./3rd |
| 5 | K21.03599 | 930 263 0812 | | 1 | 2.VİT.DİŞLİ KARŞILIĞI 23 DİŞ (Devir Sensörlü) | GEAR 2nd 23 T (With Speed Sensor) |
| 6 | K21.06341 | 930 263 0402 | | 1 | GRUP MİLİ 15/15/18/16 DİŞ | COUNTER SHAFT 15/15/18/16 T |
| 7 | K21.03624 | 016 981 1205 | (012 981 9405) | 1 | GRUP MİLİ ARKA BİLYA | ROLLER BEARING 60X130X33,8mm |

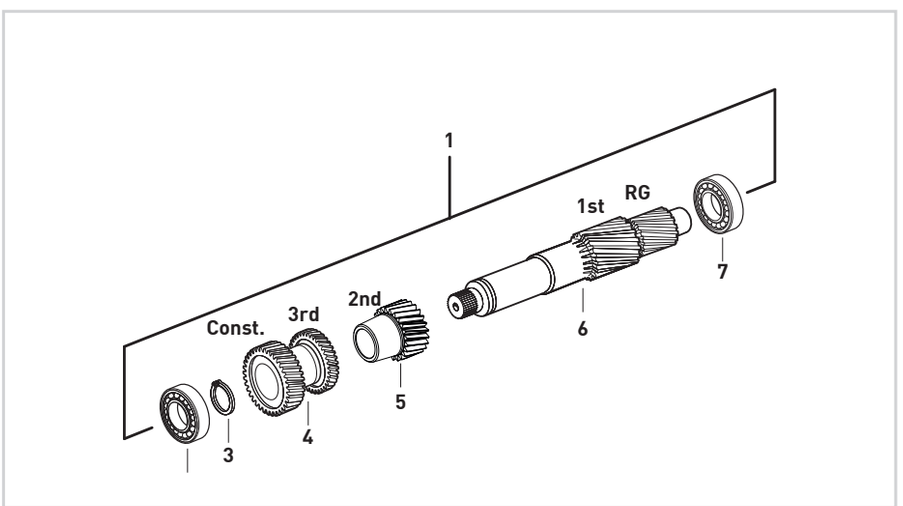


| Fig. | Kacmaz No. | Oem No | Oem Old No | Pcs. | Ürün Tanımı | Description |
|---|---|---|---|---|---|---|
| 1 | K21.06423 | | | Kit | GRUP MİLİ KOMPLE (Devir Sensörsüz) | COUNTER SHAFT COMPLETE (W/Out Speed Sensor) |
| 2 | K21.03606 | 015 981 9005 | (014 981 1405) | 1 | GRUP MİLİ ÖN BİLYA | ROLLER BEARING 50,8X100X35mm |
| 3 | K21.06425 | 389 994 0041 | | 1 | GRUP MİLİ ÖN BİLYA SEKMANI | RETAINING RING 2,50mm |
| 4 | K21.06373 | 930 263 1310 | | 1 | TAK.VE 3.VİTES DİŞLİ KARŞ.30/36 DİŞ | DOUBLE GEAR Const./3rd |
| 5 | K21.06420 | 930 263 0112 | | 1 | 2.VİT.DİŞLİ KARŞILIĞI 23 DİŞ (Devir Sensörsüz) | GEAR 2nd 23 T (W/Out Speed Sensor) |
| 6 | K21.06341 | 930 263 0402 | | 1 | GRUP MİLİ 15/15/18/16 DİŞ | COUNTER SHAFT 15/15/18/16 T |
| 7 | K21.03624 | 016 981 1205 | (012 981 9405) | 1 | GRUP MİLİ ARKA BİLYA | ROLLER BEARING 60X130X33,8mm |



Original parts names, oem numbers, symbols and descriptions used in this catalogue are for reference purposes only.

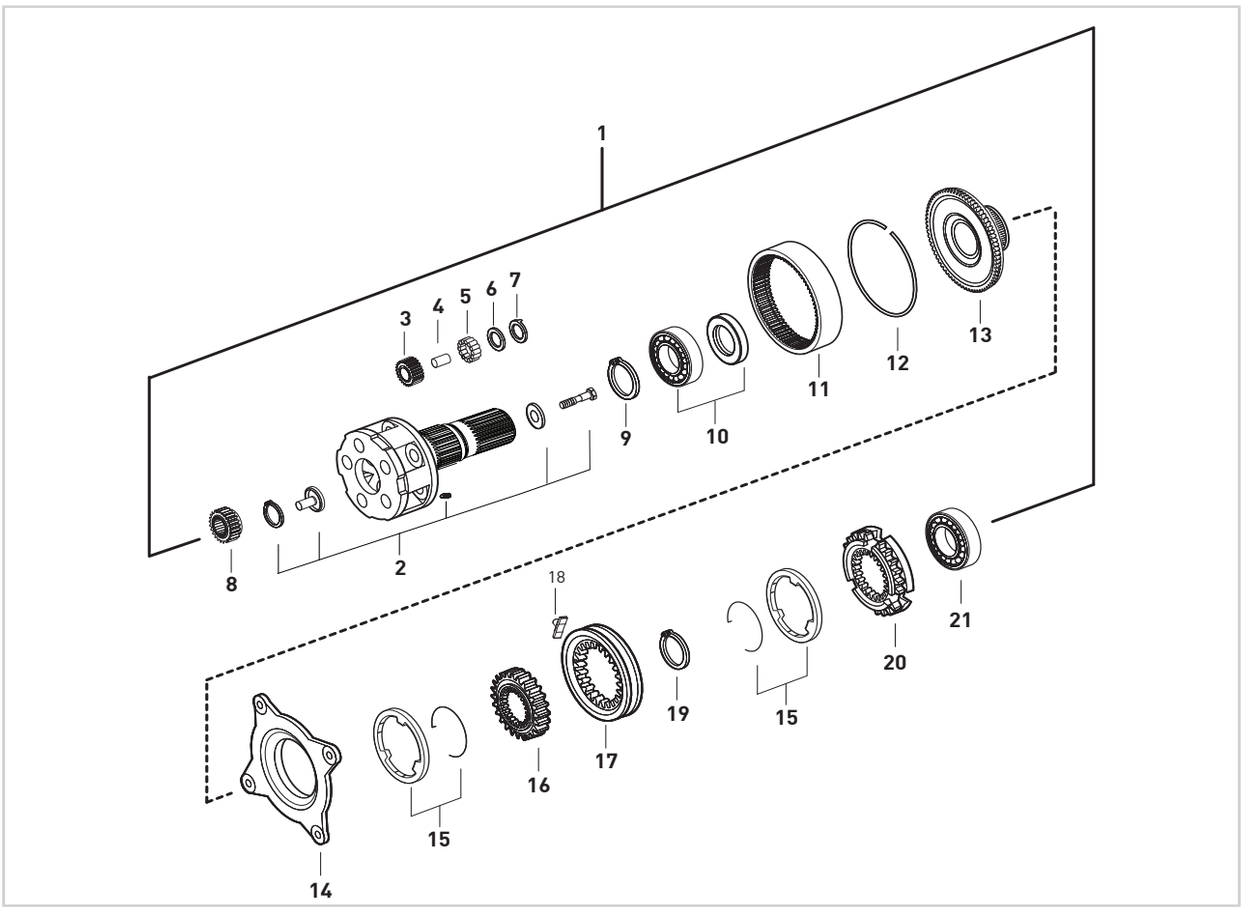


| Fig. | Kacmaz No. | Oem No | Oem Old No | Pcs. | Ürün Tanımı | Description | Sizes |
|---|---|---|---|---|---|---|---|
| 1 | K21.03554 | | | Kit | AĞIR SERİ ARKA AKTARMA KOMPLE | PLANETARY CARRIER COMPLETE | |
| 2 | K21.03180 | 946 260 3561 | (946 260 3661) | 1 | ŞANZIMAN HEYKELİ (BOŞ) | PLANETARY CARRIER (EMPTY) | |
| | | | (945 260 4561) | | | | |
| | | | (945 260 4461) | | | | |
| 3 | K21.03436 | 945 262 0006 | | 5 | HEYKEL KOZA DİŞLİSİ 28 DİŞ | PLANETARY GEAR 28 T. | |
| 4 | K21.03437 | 389 262 0407 | | 5 | HEYKEL KOZA DİŞLİ PİMİ | PLANETARY GEAR PIN | |
| 5 | K21.03816 | 000 981 4186 | (000 981 4386) | 125 | HEYKEL KOZA DİŞLİ TANE BİLYA | NEEDLE ROLLER | D5X39,6 |
| 6 | K21.04074 | 389 262 0162 | (389 262 6462) | 10 | HEYKEL KOZA DİŞLİ PULU | THRUST WASHER | |
| 7 | K21.04075 | 945 262 1162 | (945 262 0162) | 10 | HEYKEL KOZA DİŞLİ PULU | THRUST WASHER | |
| 8 | K21.03169 | 945 262 0909 | (389 262 0809) | 1 | GÜNEŞ DİŞLİ 25 DİŞ | SUN GEAR 25 T. | |
| | | | (389 262 0909) | | | | |
| 9 | K21.06864 | 000472 130000 | | 1 | ÇEMBER DİŞLİ BİLYA SEKMANI | RETAINING RING | 130X4mm |
| 10 | K21.03614 | 008 981 1325 | (004 981 8725) | 1 | ÇEMBER DİŞLİ BİLYASI | ROLLER BEARING | 90X130X14mm |
| 11 | K21.03449 | 945 262 1208 | (945 262 0808) | 1 | ÇEMBER DİŞLİ 85 DİŞ | RING WHEEL 85 T. | |
| 12 | K21.04253 | 389 262 0773 | | 1 | ÇEMBER DİŞLİ SEKMANI | LOCK RING | |
| 13 | K21.03442 | 930 262 0125 | (389 262 1425) | 1 | PLANET ÇAN DİŞLİ 85 DİŞ | CARRIER HUB 85 T. | |
| 14 | K21.03037 | 947 260 3036 | (947 260 0836) | 1 | TABLA SENKROMENÇ | FOLLOWER RING | |
| 15 | K21.03185 | 947 260 0945 | | 2 | AĞIR SERİ FRENLEME (Mo) | SYNCHRONIZING CONE / Mo | |
| 16 | K21.03079 | 389 262 4935 | (389 262 2035) | 1 | AĞIR SERİ YILDIZ DİŞLİ 73 DİŞ | SYNCHRONIZER HUB 73 T. | |
| 17 | K21.03033 | 945 262 6923 | (930 262 0623) | 1 | AĞIR SERİ HALKA | ENGAGING SLEEVE | |
| 18 | K21.03431 | 960 265 0049 | (947 265 0349) | 2 | AĞIR SERİ HİLAL PABUCU | SLIDING PAD | |
| 19 | K21.04356 | 000471 120000 | | 1 | AĞIR SERİ YILDIZ DİŞLİ SEKMANI | RETAINING RING | |
| 20 | K21.03186 | 945 262 3834 | | 1 | SERİ SENKROMENÇ | ENGAGING RING | |
| 21 | K21.03625 | 008 981 3025 | (008 981 5225) | 1 | ŞANZIMAN ARKA BİLYA | ROLLER BEARING | 80X150X28mm |



**Original parts names, oem numbers, symbols and descriptions used in this catalogue are for reference purposes only.**

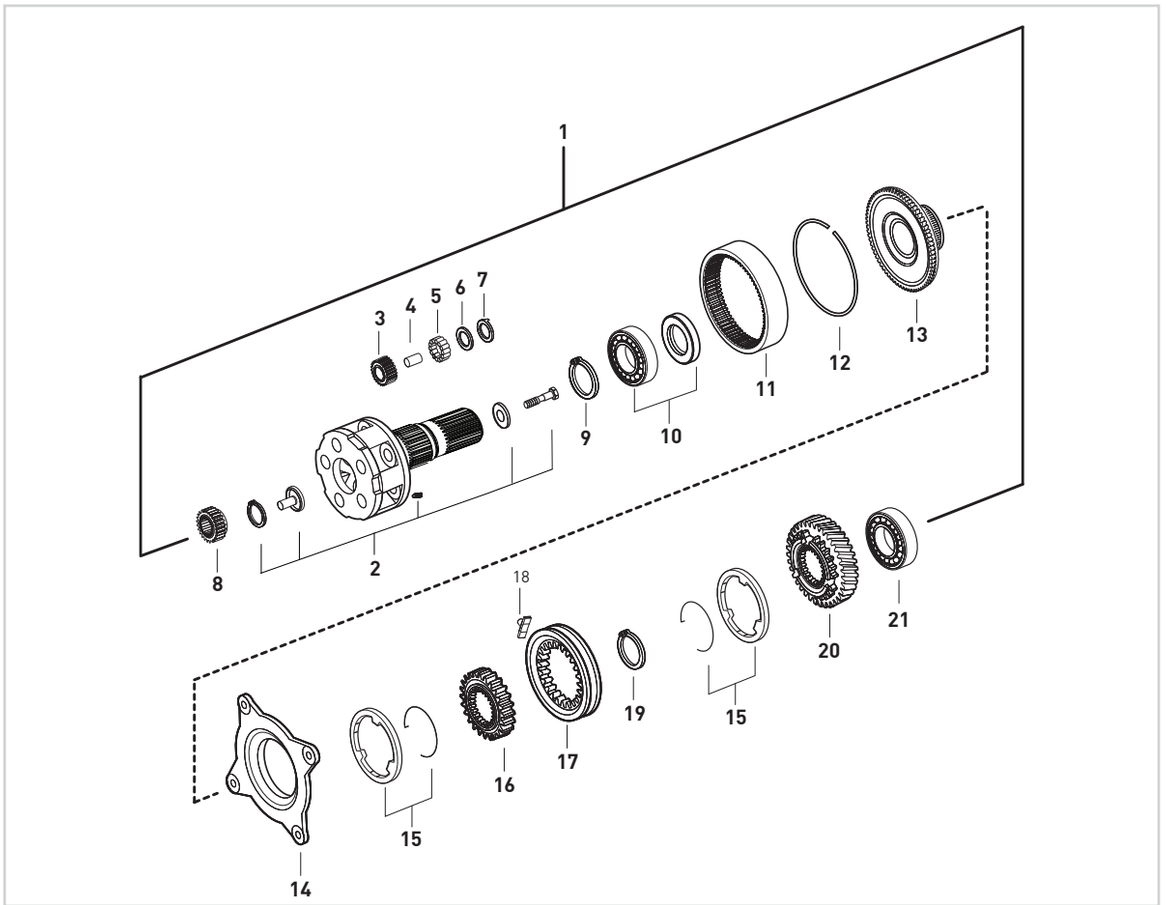


| Fig. | Kacmaz No. | Oem No | Oem Old No | Pcs. | Ürün Tanımı | Description | Sizes |
|---|---|---|---|---|---|---|---|
| 1 | K21.06384 | | | Kit | AĞIR SERİ ARKA AKTARMA KOMPLE | PLANETARY CARRIER COMPLETE | |
| 2 | K21.03180 | 946 260 3561 | (946 260 3661) | 1 | ŞANZIMAN HEYKELİ (BOŞ) | PLANETARY CARRIER (EMPTY) | |
| | | | (945 260 4561) | | | | |
| | | | (945 260 4461) | | | | |
| 3 | K21.03436 | 945 262 0006 | | 5 | HEYKEL KOZA DİŞLİSİ 28 DİŞ | PLANETARY GEAR 28 T. | |
| 4 | K21.03437 | 389 262 0407 | | 5 | HEYKEL KOZA DİŞLİ PİMİ | PLANETARY GEAR PIN | |
| 5 | K21.03816 | 000 981 4186 | (000 981 4386) | 125 | HEYKEL KOZA DİŞLİ TANE BİLYA | NEEDLE ROLLER | D5X39,6 |
| 6 | K21.04074 | 389 262 0162 | (389 262 6462) | 10 | HEYKEL KOZA DİŞLİ PULU | THRUST WASHER | |
| 7 | K21.04075 | 945 262 1162 | (945 262 0162) | 10 | HEYKEL KOZA DİŞLİ PULU | THRUST WASHER | |
| 8 | K21.03169 | 945 262 0909 | (389 262 0809) | 1 | GÜNEŞ DİŞLİ 25 DİŞ | SUN GEAR 25 T. | |
| | | | (389 262 0909) | | | | |
| 9 | K21.06864 | 000472 130000 | | 1 | ÇEMBER DİŞLİ BİLYA SEKMANI | RETAINING RING | 130X4mm |
| 10 | K21.03614 | 008 981 1325 | (004 981 8725) | 1 | ÇEMBER DİŞLİ BİLYASI | ROLLER BEARING | 90X130X14mm |
| 11 | K21.03449 | 945 262 1208 | (945 262 0808) | 1 | ÇEMBER DİŞLİ 85 DİŞ | RING WHEEL 85 T. | |
| 12 | K21.04253 | 389 262 0773 | | 1 | ÇEMBER DİŞLİ SEKMANI | LOCK RING | |
| 13 | K21.03442 | 930 262 0125 | (389 262 1425) | 1 | PLANET ÇAN DİŞLİ 85 DİŞ | CARRIER HUB 85 T. | |
| 14 | K21.03037 | 947 260 3036 | (947 260 0836) | 1 | TABLA SENKROMENÇ | FOLLOWER RING | |
| 15 | K21.03185 | 947 260 0945 | | 2 | AĞIR SERİ FRENLEME (Mo) | SYNCHRONIZING CONE / Mo | |
| 16 | K21.03079 | 389 262 4935 | (389 262 2035) | 1 | AĞIR SERİ YILDIZ DİŞLİ 73 DİŞ | SYNCHRONIZER HUB 73 T. | |
| 17 | K21.03033 | 945 262 6923 | (930 262 0623) | 1 | AĞIR SERİ HALKA | ENGAGING SLEEVE | |
| 18 | K21.03431 | 960 265 0049 | (947 265 0349) | 2 | AĞIR SERİ HİLAL PABUCU | SLIDING PAD | |
| 19 | K21.04356 | 000471 120000 | | 1 | AĞIR SERİ YILDIZ DİŞLİ SEKMANI | RETAINING RING | |
| 20 | K21.03188 | 930 264 0320 | | 1 | RETARDER DİŞLİSİ 64 DİŞ | RETARDER GEAR 64 T. | |
| 21 | K21.03625 | 008 981 3025 | (008 981 5225) | 1 | ŞANZIMAN ARKA BİLYA | ROLLER BEARING | 80X150X28mm |



Original parts names, oem numbers, symbols and descriptions used in this catalogue are for reference purposes only.

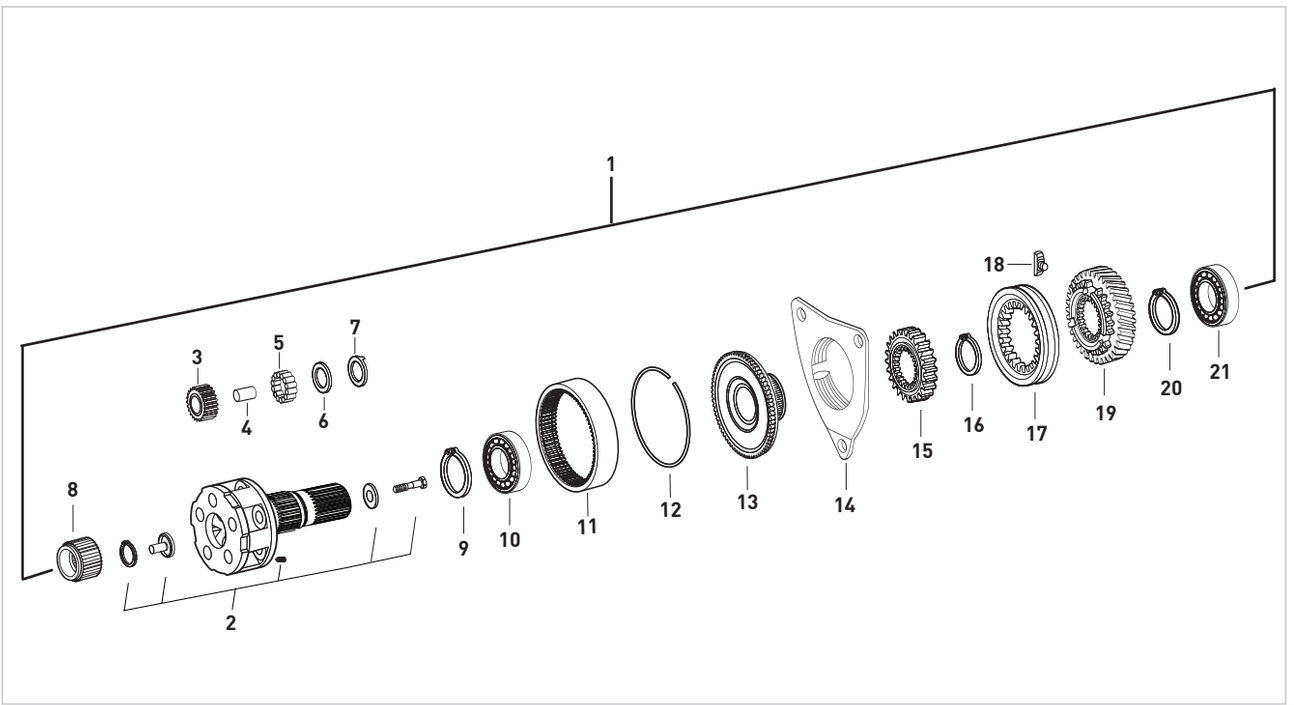


| Fig. | Kacmaz No. | Oem No | Oem Old No | Pcs. | Ürün Tanımı | Description | Sizes |
|---|---|---|---|---|---|---|---|
| 1 | K21.06986 | | | Kit | ŞANZIMAN HEYKELİ KOMPLE | PLANETARY CARRIER COMPLETE | |
| 2 | K21.03180 | 946 260 3561 | (946 260 3661) | 1 | ŞANZIMAN HEYKELİ (BOŞ) | PLANETARY CARRIER (EMPTY) | |
| | | | (945 260 4561) | | | | |
| | | | (945 260 4461) | | | | |
| 3 | K21.03436 | 945 262 0006 | | 5 | HEYKEL KOZA DİŞLİSİ 28 DİŞ | PLANETARY GEAR 28 T. | |
| 4 | K21.03437 | 389 262 0407 | | 5 | HEYKEL KOZA DİŞLİ PİMİ | PLANETARY GEAR PIN | |
| 5 | K21.03816 | 000 981 4186 | (000 981 4386) | 125 | HEYKEL KOZA DİŞLİ TANE BİLYA | NEEDLE ROLLER | D5X39,6 |
| 6 | K21.04074 | 389 262 0162 | (389 262 6462) | 10 | HEYKEL KOZA DİŞLİ PULU | THRUST WASHER | |
| 7 | K21.04075 | 945 262 1162 | (945 262 0162) | 10 | HEYKEL KOZA DİŞLİ PULU | THRUST WASHER | |
| 8 | K21.06506 | 960 262 0009 | (948 262 0209) | 1 | GÜNEŞ DİŞLİ 25 DİŞ | SUN GEAR 25 T. | |
| 9 | K21.06864 | 000472 130000 | | 1 | ÇEMBER DİŞLİ BİLYA SEKMANI | RETAINING RING | 130x4mm |
| 10 | K21.03614 | 008 981 1325 | (004 981 8725) | 1 | ÇEMBER DİŞLİ BİLYASI | ROLLER BEARING | 90X130X14mm |
| 11 | K21.03449 | 945 262 1208 | (945 262 0808) | 1 | ÇEMBER DİŞLİ 85 DİŞ | RING WHEEL 85 T. | |
| 12 | K21.04253 | 389 262 0773 | | 1 | ÇEMBER DİŞLİ SEKMANI | LOCK RING | |
| 13 | K21.03442 | 930 262 0125 | (389 262 1425) | 1 | PLANET ÇAN DİŞLİ 85 DİŞ | CARRIER HUB 85 T. | |
| 14 | K21.06592 | 960 260 2336 | | 1 | TABLA SENKROMENÇ | FOLLOWER RING | |
| 15 | K21.03079 | 389 262 4935 | (389 262 2035) | 1 | AĞIR SERİ YILDIZ DİŞLİ 73 DİŞ | SYNCHRONIZER HUB 73 T. | |
| 16 | K21.04356 | 000471 120000 | | 1 | AĞIR SERİ YILDIZ DİŞLİ SEKMANI | RETAINING RING | |
| 17 | K21.06594 | 960 262 1323 | | 1 | AĞIR SERİ HALKA | ENGAGING SLEEVE | |
| 18 | K21.03431 | 960 265 0049 | (947 265 0349) | 2 | AĞIR SERİ HİLAL PABUCU | SLIDING PAD | |
| 19 | K21.06565 | 960 264 2720 | | 1 | RETARDER DİŞLİSİ | RETARDER GEAR | |
| 20 | K21.06865 | 000472 150000 | | 1 | ŞANZIMAN HEYKEL BİLYA SEKMANI | RETAINING RING | |
| 21 | K21.03625 | 008 981 3025 | (008 981 5225) | 1 | ŞANZIMAN ARKA BİLYA | ROLLER BEARING | 80X150X28mm |



**Original parts names, oem numbers, symbols and descriptions used in this catalogue are for reference purposes only.**

| Fig. | Kacmaz No. | Oem No | Oem Old No | Pcs. | Ürün Tanımı | Description |
|---|---|---|---|---|---|---|
| 1 | K21.03085 | 947 264 0005 | (389 269 0310) | 1 | YAĞ POMPA MİLİ | OIL PUMP SHAFT |
| 1 | K21.03670 | 947 264 0105 | | 1 | YAĞ POMPA MİLİ (RETARDER) | OIL PUMP SHAFT |
| 2 | K21.03511 | 029 997 5748 | | 1 | YAĞ POMPA KAPAK ORİNGİ | O-RING |
| 3 | K21.03558 | 947 264 0287 | | 1 | YAĞ POMPA KAPAĞI | OIL PUMP COVER |
| 4 | K21.03613 | 004 981 9225 | (004 981 8625) | 1 | PTO MİL BİLYASI | ROLLER BEARING |
| 5 | K21.06964 | 000471 045000 | (003 994 3741) | 1 | PTO MİL BİLYA SEKMANI | RETAINING RING |
| 6 | K21.06998 | 017 981 1705 | | 1 | PTO BORU DİŞLİ BİLYASI | ROLLER BEARING |
| 7 | | 947 260 4708 | | 1 | PTO BORU DİŞLİ | GEAR |
| 8 | | 017 981 1805 | | 2 | PTO BORU DİŞLİ BİLYASI | ROLLER BEARING |
| 9 | K21.04334 | 945 264 0006 | | 1 | PTO ARA ADAPTÖR MİLİ | INTERM.SHAFT |
| 10 | | 387 264 3652 | | 2 | BİLYA AYAR RAYNELİ | THRUST WASHER |
| 10 | | 387 264 3752 | | 2 | BİLYA AYAR RAYNELİ | THRUST WASHER |
| 10 | | 387 264 3852 | | 2 | BİLYA AYAR RAYNELİ | THRUST WASHER |
| 11 | | 000988 022010 | | 2 | BİLYA AYAR PULU | THRUST WASHER |
| 12 | K21.04333 | 385 993 5201 | | 1 | YAY | SPRING |
| 13 | | 912009 022100 | | 1 | BİLYA AYAR PUL SEKMANI | RETAINING RING |
| 14 | K21.04332 | 000625 000629 | | 1 | PTO MIL ŞAPKASI | PTO SHAFT CAP |
| 15 | | 016 981 6705 | | 1 | PTO BORU DİŞLİ BİLYASI | ROLLER BEARING |
| 16 | | 947 264 0621 | (947 264 0521) | 1 | PTO BORU DİŞLİ | GEAR |
| 17 | K21.04362 | | | kit | ARA ADAPTÖR MİLİ KOMPLE | INTERM.SHAFT COMP. |
| 18 | K21.06346 | 970 260 0457 | | kit | P.T.O VENTİLİ | VALVE |

P.T.O. (POWER TAKE OFF)

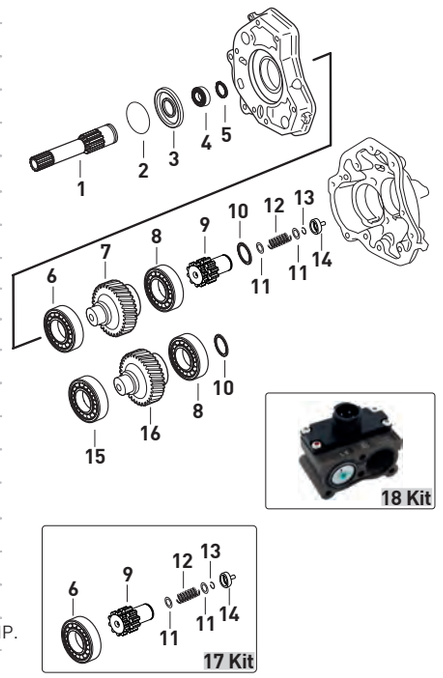


| Fig. | Kacmaz No. | Oem No | Oem Old No | Pcs. | Ürün Tanımı | Description |
|---|---|---|---|---|---|---|
| 1 | K21.06969 | 960 264 0105 | | 1 | PTO MİLİ | INTERM.SHAFT |
| 2 | K21.03558 | 947 264 0287 | | 1 | YAĞ POMPA KAPAĞI | OIL PUMP COVER |
| 3 | K21.03613 | 004 981 9225 | (004 981 8625) | 1 | PTO MİL BİLYASI | ROLLER BEARING |
| 4 | K21.06964 | 000471 045000 | (003 994 3741) | 1 | PTO MİL BİLYA SEKMANI | RETAINING RING |
| 5 | K21.06998 | 017 981 1705 | | 1 | PTO BORU DİŞLİ BİLYASI | ROLLER BEARING |
| 6 | | 947 260 4708 | | 1 | PTO BORU DİŞLİ | GEAR |
| 7 | | 017 981 1805 | | 2 | PTO BORU DİŞLİ BİLYASI | ROLLER BEARING |
| 8 | K21.04334 | 945 264 0006 | | 1 | PTO ARA ADAPTÖR MİLİ | INTERM.SHAFT |
| 9 | | 387 264 3652 | | 2 | BİLYA AYAR RAYNELİ | THRUST WASHER |
| 9 | | 387 264 3752 | | 2 | BİLYA AYAR RAYNELİ | THRUST WASHER |
| 9 | | 387 264 7152 | | 2 | BİLYA AYAR RAYNELİ | THRUST WASHER |
| 9 | | 387 264 4052 | | 2 | BİLYA AYAR RAYNELİ | THRUST WASHER |
| 10 | | 000988 022010 | | 2 | BİLYA AYAR PULU | THRUST WASHER |
| 11 | K21.04333 | 385 993 5201 | | 1 | YAY | SPRING |
| 12 | | 990 990 1700 | | 1 | BİLYA AYAR PUL SEKMANI | RETAINING RING |
| 13 | K21.04332 | 000625 000629 | | 1 | PTO MIL ŞAPKASI | PTO SHAFT CAP |
| 14 | | 990 981 0300 | | 1 | PTO BORU DİŞLİ BİLYASI | ROLLER BEARING |
| 15 | | 947 264 0921 | (947 264 0821) | 1 | PTO BORU DİŞLİ | GEAR |
| 16 | K21.04362 | | | kit | ARA ADAPTÖR MİLİ KOMPLE | INTERM.SHAFT COMP. |

P.T.O. (POWER TAKE OFF)

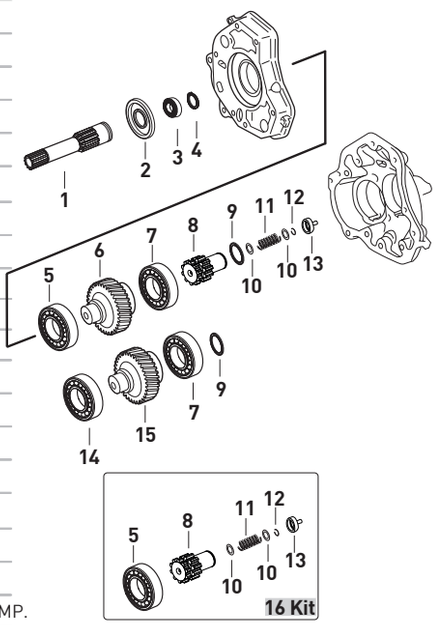






Original parts names, oem numbers, symbols and descriptions used in this catalogue are for reference purposes only.

# GEARBOX G 330-12 KL / 11,63 - 0,77

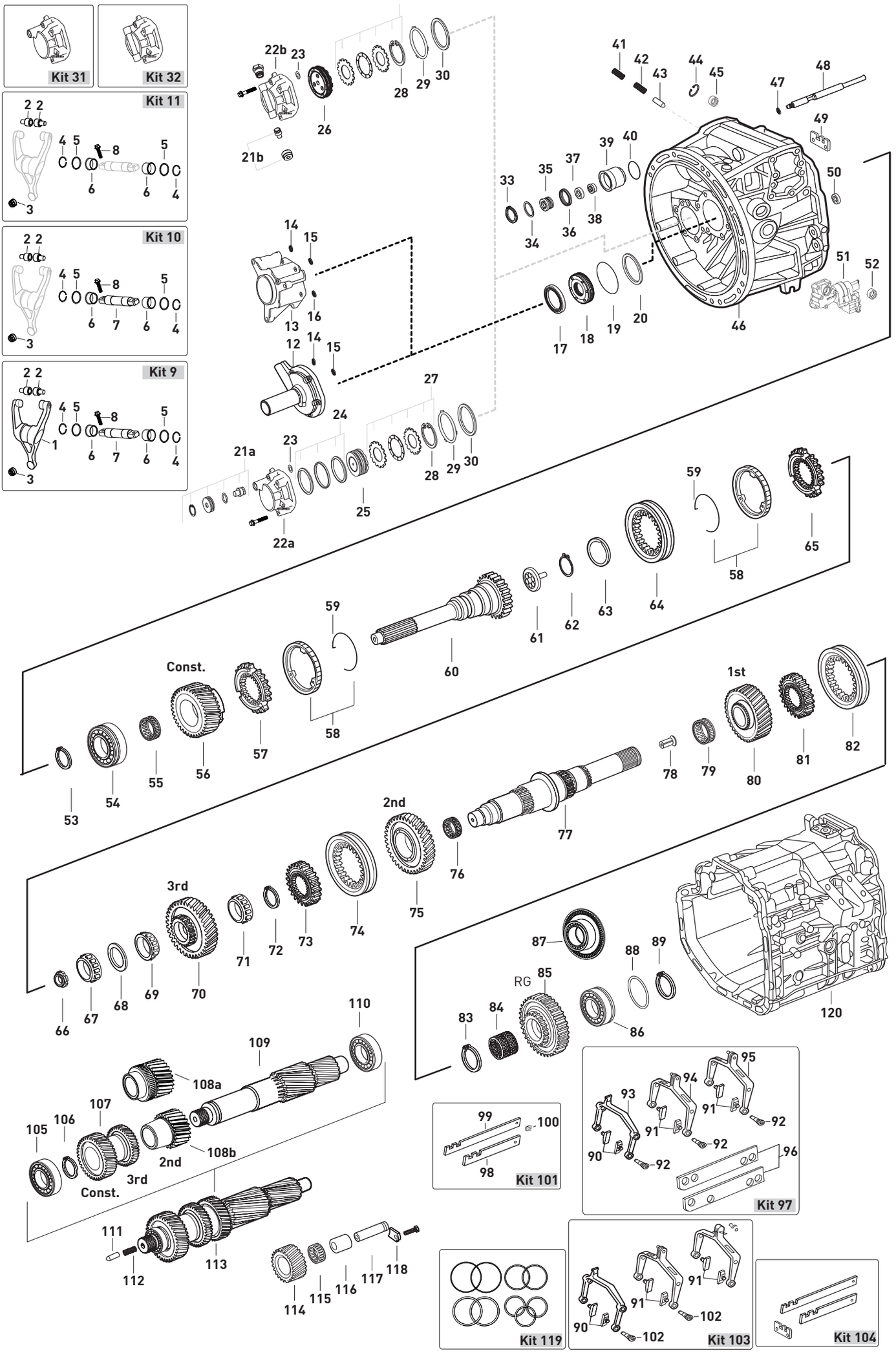




Original parts names, oem numbers, symbols and descriptions used in this catalogue are for reference purposes only.

| Fig. | Kacmaz No | Oem No | Oem Old No | Pcs. | Ürün Tanımı | Description | Sizes | Not | 715380 | 715381 | 715382 | 715384 | 715388 |
|---|---|---|---|---|---|---|---|---|---|---|---|---|---|
| 1 | | 655 250 1513 | | 1 | DEBRİYAJ ÇATALI | RELEASE FORK | | | ♦ | | ♦ | | ♦ |
| 2 | K21.07038 | 000 254 0017 | | 2 | DEBRİYAJ ÇATAL BURÇ VE PİMİ | CAM ROLLER | | | ♦ | | ♦ | | ♦ |
| 3 | K21.07040 | 000 254 0335 | | 1 | DEBRİYAJ ÇATAL PLASTİK BURCU | PLASTIC BUSHING | | | ♦ | | ♦ | | ♦ |
| 4 | | 912009 035100 | | 2 | DEBRİYAJ ÇATAL MİL SEKMANI | RETAINING RING | | | ♦ | | ♦ | | ♦ |
| 5 | | 000988 036100 | | 2 | DEBRİYAJ ÇATAL MİL AYAR PULU | WASHER | | | ♦ | | ♦ | | ♦ |
| 6 | | 002 992 1501 | | 2 | DEBRİYAJ ÇATAL MİL BURCU | BUSHING | 36,5X43X16mm | | ♦ | | ♦ | | ♦ |
| 7 | | 655 254 0206 | | 1 | DEBRİYAJ ÇATAL MİLİ | SHAFT | | | ♦ | | ♦ | | ♦ |
| 8 | | 910105 012026 | | 2 | DEBRİYAJ ÇATAL MİL VİDASI | SCREW | M12X40mm | | ♦ | | ♦ | | ♦ |
| 9 | K21.07036 | 655 250 1813 | | Kit | DEBRİYAJ ÇATALI KOMPLE | RELEASE FORK COMPLETE | | | ♦ | | ♦ | | ♦ |
| 9 | K21.97036 | 655 250 1813-S | | Kit | DEB.ÇATALI KOMPLE (BİLYALI TİP) | RELEASE FORK COMPLETE | | WITH BEARING | ♦ | | ♦ | | ♦ |
| 10 | K21.07037 | | | Kit | DEBRİYAJ ÇATALI TAMİR TAKIMI | RELEASE FORK REPAIR KIT | | | ♦ | | ♦ | | ♦ |
| 11 | K21.07039 | | | Kit | DEBRİYAJ ÇATALI TAMİR TK.MİLSİZ | RELEASE FORK REPAIR KIT | | W/OUT SHAFT | ♦ | | ♦ | | ♦ |
| 12 | K21.03429 | 945 261 1118 | (945 261 0118) | 1 | PRİZDİREK KEÇE KAPAĞI | COVER | | | ♦ | | ♦ | | ♦ |
| | | | (945 261 0818) | | | | | | | | | | |
| 13 | | 960 261 0218 | | 1 | PRİZDİREK KEÇE KAPAĞI | COVER | | | | ♦ | | ♦ | |
| 13 | | 960 261 0518 | | 1 | PRİZDİREK KEÇE KAPAĞI | COVER | | | | ♦ | | ♦ | |
| 14 | K21.06637 | 019 997 8348 | (020 997 7948) | 1 | PRİZDİREK KEÇE KAPAK ORİNGİ | O-RING | 14X4mm | | ♦ | ♦ | ♦ | ♦ | ♦ |
| 15 | K21.06636 | 015 997 4048 | (020 997 8748) | 1 | PRİZDİREK KEÇE KAPAK ORİNGİ | O-RING | 5X3mm | | ♦ | ♦ | ♦ | ♦ | ♦ |
| 16 | | 023 997 7748 | | 1 | PRİZDİREK KEÇE KAPAK ORİNGİ | O-RING | 13,1X2mm | | | ♦ | | ♦ | |
| 17 | K21.03509 | 019 997 0547 | (023 997 7847) | 1 | PRİZDİREK KEÇESİ | OIL SEAL | 56X72X8mm | | ♦ | ♦ | ♦ | ♦ | ♦ |
| | | | (019 997 0647) | | | | | | | | | | |
| | | | (022 997 8547) | | | | | | | | | | |
| 18 | K21.06038 | 389 261 0665 | (389 261 0765) | 1 | YAĞ TUTUCU DİSK | OIL BAFFLE | 75X16mm | | ♦ | ♦ | ♦ | ♦ | ♦ |
| | | | (389 261 0865) | | | | | | | | | | |
| 19 | K21.06635 | 020 997 7848 | | 1 | PRİZDİREK KEÇE KAPAK ORİNGİ | O-RING | 138X3mm | | ♦ | ♦ | ♦ | ♦ | ♦ |
| 20 | K21.04162 | 389 262 4152 | (389 262 0955) | 1 | PRİZDİREK AYAR RAYNELİ | THRUST WASHER | 0,10mm | | ♦ | ♦ | ♦ | ♦ | ♦ |
| 20 | K21.04243 | 389 262 0855 | | 1 | PRİZDİREK AYAR RAYNELİ | THRUST WASHER | 0,15mm | | ♦ | ♦ | ♦ | ♦ | ♦ |
| 20 | K21.04151 | 389 262 0755 | | 1 | PRİZDİREK AYAR RAYNELİ | THRUST WASHER | 0,20mm | | ♦ | ♦ | ♦ | ♦ | ♦ |
| 20 | K21.06715 | 389 262 3055 | | 1 | PRİZDİREK AYAR RAYNELİ | THRUST WASHER | 0,25mm | | ♦ | ♦ | ♦ | ♦ | ♦ |
| 20 | K21.04221 | 389 262 3255 | | 1 | PRİZDİREK AYAR RAYNELİ | THRUST WASHER | 0,31mm | | ♦ | ♦ | ♦ | ♦ | ♦ |
| 20 | K21.04163 | 389 262 3555 | (389 262 0655) | 1 | PRİZDİREK AYAR RAYNELİ | THRUST WASHER | 0,40mm | | ♦ | ♦ | ♦ | ♦ | ♦ |
| | | | (389 262 4452) | | | | | | | | | | |
| 20 | K21.04164 | 389 262 3755 | (389 262 1954) | 1 | PRİZDİREK AYAR RAYNELİ | THRUST WASHER | 0,46mm | | ♦ | ♦ | ♦ | ♦ | ♦ |
| 20 | K21.04246 | 389 262 3855 | | 1 | PRİZDİREK AYAR RAYNELİ | THRUST WASHER | 0,49mm | | ♦ | ♦ | ♦ | ♦ | ♦ |
| 20 | K21.04250 | 389 262 4055 | (389 262 0155) | 1 | PRİZDİREK AYAR RAYNELİ | THRUST WASHER | 0,55mm | | ♦ | ♦ | ♦ | ♦ | ♦ |
| | | | (389 262 2154) | | | | | | | | | | |
| 20 | K21.04167 | 389 262 4255 | (389 262 2254) | 1 | PRİZDİREK AYAR RAYNELİ | THRUST WASHER | 0,61mm | | ♦ | ♦ | ♦ | ♦ | ♦ |
| 20 | K21.04168 | 389 262 4355 | (389 262 2354) | 1 | PRİZDİREK AYAR RAYNELİ | THRUST WASHER | 0,64mm | | ♦ | ♦ | ♦ | ♦ | ♦ |
| 20 | K21.04169 | 389 262 4555 | (389 262 2454) | 1 | PRİZDİREK AYAR RAYNELİ | THRUST WASHER | 0,70mm | | ♦ | ♦ | ♦ | ♦ | ♦ |
| 20 | K21.04170 | 389 262 4755 | (389 262 2554) | 1 | PRİZDİREK AYAR RAYNELİ | THRUST WASHER | 0,76mm | | ♦ | ♦ | ♦ | ♦ | ♦ |
| 20 | K21.04281 | 389 262 4855 | (389 262 0555) | 1 | PRİZDİREK AYAR RAYNELİ | THRUST WASHER | 0,79mm | | ♦ | ♦ | ♦ | ♦ | ♦ |
| 20 | K21.04282 | 389 262 5555 | | 1 | PRİZDİREK AYAR RAYNELİ | THRUST WASHER | 1,00mm | | ♦ | ♦ | ♦ | ♦ | ♦ |
| 20 | K21.04171 | 389 262 9654 | (389 262 2654) | 1 | PRİZDİREK AYAR RAYNELİ | THRUST WASHER | 2,00mm | | ♦ | ♦ | ♦ | ♦ | ♦ |
| 21a | K21.06498 | 930 260 0058 | | 1 | HAVALANDIRMA TAMİR TAKIMI | REPAIR KIT | | (K) | ♦ | | ♦ | | ♦ |
| 21b | K21.07027 | 960 260 0058 | | 1 | HAVALANDIRMA TAMİR TAKIMI | REPAIR KIT | | (L) | | ♦ | | ♦ | |
| 22a | K21.06301 | 960 261 1933 | | 1 | GRUP DURDURUCU KAPAĞI | COVER | | (K) | ♦ | | ♦ | | ♦ |
| 22b | K21.06949 | 960 261 4133 | | 1 | GRUP DURDURUCU KAPAĞI | COVER | | (L) | | ♦ | | ♦ | |
| 23 | K21.06636 | 015 997 4048 | (020 997 8748) | 1 | GRUP DURDURUCU PİSTON ORİNGİ | O-RING | 5X3mm | | ♦ | ♦ | ♦ | ♦ | ♦ |
| 24 | K21.06396 | 947 260 0718 | (960 260 3318) | 1 | GRUP DURD.PİSTON TAMİR TAKIMI | REPAIR KIT | | | ♦ | | ♦ | | ♦ |
| 25 | K21.06302 | 960 260 1718 | | 1 | GRUP DURDURUCU KAPAK PİSTONU | PISTON | | (K) | ♦ | | ♦ | | ♦ |
| 26 | K21.06967 | 960 260 3418 | | 1 | GRUP DURDURUCU KAPAK PİSTONU | PISTON | | (L) | | ♦ | | ♦ | |
| 27 | K21.06431 | 960 262 0291 | (960 262 0191) | 1 | KAVRAMA HALKA SETİ | PARTS KIT | | | ♦ | ♦ | ♦ | ♦ | ♦ |
| | | | (960 262 0091) | | | | | | | | | | |
| | | | (947 260 4036) | | | | | | | | | | |
| 28 | K21.06730 | 970 994 3541 | (000472 100000) | 1 | GRUP DURDURUCU KİLİT SEKMANI | RETAINING RING | 3,00mm | | ♦ | ♦ | ♦ | ♦ | ♦ |

NOTES :
Parts coded with alphabetic letters are used together.

GEARBOX TYPE:
715380 - 715382 - G330/12 KLAUEN OLD
715381 - 715384 - 715388 G330/12 KLAUEN NEW

NOTLAR :
Alfabetik harf ile kodlanan parçalar birlikte kullanılır.

ŞANZIMAN TİPLERİ:
715380 - 715382 - G330/12 KLAUEN OLD
715381 - 715384 - 715388 G330/12 KLAUEN NEW





Original parts names, oem numbers, symbols and descriptions used in this catalogue are for reference purposes only.

# GEARBOX G 330-12 KL / 11,63 - 0,77

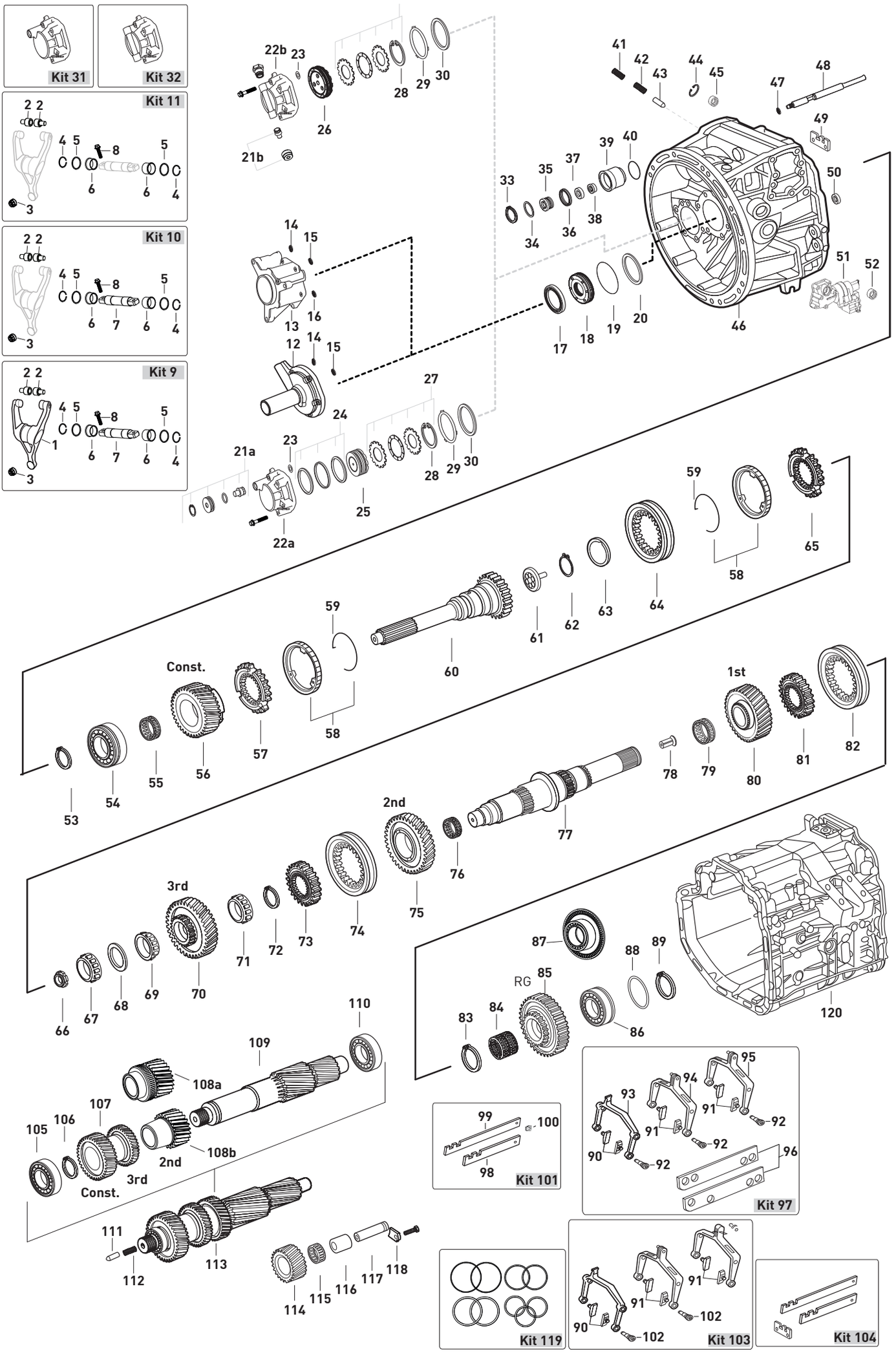




Original parts names, oem numbers, symbols and descriptions used in this catalogue are for reference purposes only.

| Fig. | Kacmaz No | Oem No | Oem Old No | Pcs. | Ürün Tanımı | Description | Sizes | Not | 715380 | 715381 | 715382 | 715384 | 715388 |
|---|---|---|---|---|---|---|---|---|---|---|---|---|---|
| 29 | K21.06533 | 028 997 2348 | (004 997 2248) | 1 | GRUP DURDURUCU KAPAK ORİNGİ | O-RING | 100X3mm | | ♦ | ♦ | ♦ | ♦ | ♦ |
| 30 | K21.04192 | 406 337 0252 | | 1 | GRUP MİLİ ÖN BİLYA RAYNELİ | THRUST WASHER | 0,10mm | | ♦ | ♦ | ♦ | ♦ | ♦ |
| 30 | K21.04150 | 406 337 0352 | | 1 | GRUP MİLİ ÖN BİLYA RAYNELİ | THRUST WASHER | 0,20mm | | ♦ | ♦ | ♦ | ♦ | ♦ |
| 30 | K21.94150 | | | 1 | GRUP MİLİ ÖN BİLYA RAYNELİ | THRUST WASHER | 0,25mm | | ♦ | ♦ | ♦ | ♦ | ♦ |
| 30 | K21.04338 | 406 337 0452 | | 1 | GRUP MİLİ ÖN BİLYA RAYNELİ | THRUST WASHER | 0,30mm | | ♦ | ♦ | ♦ | ♦ | ♦ |
| 30 | K21.04196 | 389 263 5352 | (389 263 3252) | 1 | GRUP MİLİ ÖN BİLYA RAYNELİ | THRUST WASHER | 0,40mm | | ♦ | ♦ | ♦ | ♦ | ♦ |
| 30 | K21.04194 | 389 263 3352 | | 1 | GRUP MİLİ ÖN BİLYA RAYNELİ | THRUST WASHER | 0,45mm | | ♦ | ♦ | ♦ | ♦ | ♦ |
| 30 | K21.06719 | 389 263 5652 | | 1 | GRUP MİLİ ÖN BİLYA RAYNELİ | THRUST WASHER | 0,49mm | | ♦ | ♦ | ♦ | ♦ | ♦ |
| 30 | K21.04197 | 389 263 5852 | (389 263 3552) | 1 | GRUP MİLİ ÖN BİLYA RAYNELİ | THRUST WASHER | 0,55mm | | ♦ | ♦ | ♦ | ♦ | ♦ |
| 30 | K21.04340 | 389 263 6052 | | 1 | GRUP MİLİ ÖN BİLYA RAYNELİ | THRUST WASHER | 0,61mm | | ♦ | ♦ | ♦ | ♦ | ♦ |
| 30 | K21.04198 | 389 263 6352 | (389 263 3852) | 1 | GRUP MİLİ ÖN BİLYA RAYNELİ | THRUST WASHER | 0,70mm | | ♦ | ♦ | ♦ | ♦ | ♦ |
| 30 | K21.04154 | 389 263 3952 | | 1 | GRUP MİLİ ÖN BİLYA RAYNELİ | THRUST WASHER | 0,75mm | | ♦ | ♦ | ♦ | ♦ | ♦ |
| 30 | K21.04199 | 389 263 6852 | | 1 | GRUP MİLİ ÖN BİLYA RAYNELİ | THRUST WASHER | 0,85mm | | ♦ | ♦ | ♦ | ♦ | ♦ |
| 30 | K21.04200 | 389 263 7352 | | 1 | GRUP MİLİ ÖN BİLYA RAYNELİ | THRUST WASHER | 1,00mm | | ♦ | ♦ | ♦ | ♦ | ♦ |
| 30 | K21.04201 | 389 263 7852 | | 1 | GRUP MİLİ ÖN BİLYA RAYNELİ | THRUST WASHER | 1,15mm | | ♦ | ♦ | ♦ | ♦ | ♦ |
| 30 | K21.04202 | 389 263 8352 | | 1 | GRUP MİLİ ÖN BİLYA RAYNELİ | THRUST WASHER | 1,30mm | | ♦ | ♦ | ♦ | ♦ | ♦ |
| 31 | K21.06487 | | | 1 | GRUP DURDURUCU KAPAĞI KOMPLE | REPAIR KIT | | (K) | ♦ | | ♦ | | ♦ |
| 32 | K21.06948 | 960 260 5965 | (960 260 4865) | 1 | GRUP DURDURUCU KAPAĞI KOMPLE | REPAIR KIT | | (L) | | ♦ | | ♦ | |
| 33 | | 006 994 4241 | (000472 065001) | 1 | TAKVİYE PİSTON SEKMANI | RETAINING RING | 65X2,5mm | | ♦ | ♦ | ♦ | ♦ | ♦ |
| 34 | K21.04233 | 389 262 2555 | | 1 | TAKVİYE SİLİNDİR PULU | SPACER WASHER | 0,70mm | | ♦ | ♦ | ♦ | ♦ | ♦ |
| 34 | K21.04234 | 389 262 2655 | | 1 | TAKVİYE SİLİNDİR PULU | SPACER WASHER | 0,90mm | | ♦ | ♦ | ♦ | ♦ | ♦ |
| 34 | K21.04112 | 389 262 3254 | | 1 | TAKVİYE SİLİNDİR PULU | SPACER WASHER | 1,05mm | | ♦ | ♦ | ♦ | ♦ | ♦ |
| 34 | K21.04111 | 389 262 3354 | | 1 | TAKVİYE SİLİNDİR PULU | SPACER WASHER | 1,10mm | | ♦ | ♦ | ♦ | ♦ | ♦ |
| 34 | K21.04109 | 389 262 3554 | | 1 | TAKVİYE SİLİNDİR PULU | SPACER WASHER | 1,20mm | | ♦ | ♦ | ♦ | ♦ | ♦ |
| 34 | K21.04105 | 389 262 2052 | | 1 | TAKVİYE SİLİNDİR PULU | SPACER WASHER | 1,40mm | | ♦ | ♦ | ♦ | ♦ | ♦ |
| 34 | K21.04093 | 389 262 2355 | | 1 | TAKVİYE SİLİNDİR PULU | SPACER WASHER | 1,79mm | | ♦ | ♦ | ♦ | ♦ | ♦ |
| 34 | K21.04025 | 389 262 3252 | | 1 | TAKVİYE SİLİNDİR PULU | SPACER WASHER | 2,00mm | | ♦ | ♦ | ♦ | ♦ | ♦ |
| 34 | K21.04024 | 389 262 3352 | | 1 | TAKVİYE SİLİNDİR PULU | SPACER WASHER | 2,50mm | | ♦ | ♦ | ♦ | ♦ | ♦ |
| 35 | K21.06994 | 945 267 0218 | (387 267 0918) | 1 | TAKVİYE MİL PİSTONU | PISTON | | | ♦ | ♦ | ♦ | ♦ | ♦ |
| | | | (387 267 0618) | | | | | | | | | | |
| 36 | K21.03524 | 006 997 6447 | (020 997 6647) | 1 | TAKVİYE HAVA KEÇESİ | OIL SEAL | 41X48X11,5mm | | ♦ | ♦ | ♦ | ♦ | ♦ |
| | | | (012 997 3347) | | | | | | | | | | |
| 37 | K21.04178 | 387 267 0650 | (387 267 0250) | 1 | TAKVİYE SİLİNDİR BURCU | BUSHING | 34X22X8mm | | ♦ | ♦ | ♦ | ♦ | ♦ |
| 38 | K21.03523 | 000 267 0197 | (000 267 0397) | 1 | TAKVİYE HİLAL MİL KEÇESİ | OIL SEAL | 22X32X8mm | | ♦ | ♦ | ♦ | ♦ | ♦ |
| 39 | K21.06036 | 945 267 0819 | (945 267 0119) | 1 | TAKVİYE SİLİNDİR GÖVDESİ | CYLINDER | | | ♦ | ♦ | ♦ | ♦ | ♦ |
| | | | (945 267 0719) | | | | | | | | | | |
| | | | (945 267 0019) | | | | | | | | | | |
| 40 | K21.06534 | 022 997 4248 | | 1 | TAKVİYE SİLİNDİR ORİNGİ | O-RING | 55,6X3mm | | ♦ | ♦ | ♦ | ♦ | ♦ |
| 41 | K21.06015 | 387 993 4501 | | 1 | ŞANZ.TAKVİYE KİLİT FİŞEK YAYI | SPRING | 6,2X63mm | | ♦ | ♦ | ♦ | ♦ | ♦ |
| 42 | K21.03500 | 387 993 4401 | | 1 | KİLİT YAYI | SPRING | 9,8X63,3mm | | ♦ | ♦ | ♦ | ♦ | ♦ |
| 43 | K21.03492 | 389 267 1174 | (387 267 0074) | 1 | KİLİT FİŞEĞİ | PIN | | | ♦ | ♦ | ♦ | ♦ | ♦ |
| 44 | K21.06579 | 945 267 0073 | | 1 | ÖN GÖVDE MASURA BİLYA SEKMANI | SEEGER RING | | | ♦ | | ♦ | | ♦ |
| 45 | K21.06580 | 002 981 5712 | (945 268 0150) | 1 | ÖN GÖVDE MASURA BİLYA | BEARING | 25X39X20mm | | ♦ | | ♦ | | ♦ |
| 46 | | 945 260 8812 | (930 260 5011) | 1 | ŞANZIMAN ÖN GÖVDE | HOUSING | | | ♦ | | ♦ | | |
| | | | (930 260 2211) | | | | | | | | | | |
| | | | (945 261 7701) | | | | | | | | | | |
| 46 | | 960 260 6523 | | 1 | ŞANZIMAN ÖN GÖVDE | HOUSING | | | | ♦ | | | |
| 46 | | 960 260 6512 | | 1 | ŞANZIMAN ÖN GÖVDE | HOUSING | | | | | | ♦ | |
| 46 | | 945 260 0423 | | 1 | ŞANZIMAN ÖN GÖVDE | HOUSING | | | | | | | ♦ |
| 47 | K21.04160 | 387 263 2652 | | 1 | TAKVİYE HİLAL MİL PULU | SPACER WASHER | 0,20mm | | ♦ | ♦ | ♦ | ♦ | ♦ |
| 47 | K21.04161 | 387 263 2752 | | 1 | TAKVİYE HİLAL MİL PULU | SPACER WASHER | 0,40mm | | ♦ | ♦ | ♦ | ♦ | ♦ |
| 47 | | 387 263 2852 | | 1 | TAKVİYE HİLAL MİL PULU | SPACER WASHER | 0,60mm | | ♦ | ♦ | ♦ | ♦ | ♦ |
| 47 | | 387 263 3052 | | 1 | TAKVİYE HİLAL MİL PULU | SPACER WASHER | 1,00mm | | ♦ | ♦ | ♦ | ♦ | ♦ |
| 48 | | 930 267 2117 | | 1 | TAKVİYE HİLAL MİLİ | G.SHIFT RAIL | | | ♦ | | ♦ | | ♦ |
| 48 | | 960 267 1817 | | 1 | TAKVİYE HİLAL MİLİ | G.SHIFT RAIL | | | | ♦ | | ♦ | |

NOTES :
Parts coded with alphabetic letters are used together.

GEARBOX TYPE:
715380 - 715382 - G330/12 KLAUEN OLD
715381 - 715384 - 715388 G330/12 KLAUEN NEW

NOTLAR :
Alfabetik harf ile kodlanan parçalar birlikte kullanılır.

ŞANZIMAN TİPLERİ:
715380 - 715382 - G330/12 KLAUEN OLD
715381 - 715384 - 715388 G330/12 KLAUEN NEW





Original parts names, oem numbers, symbols and descriptions used in this catalogue are for reference purposes only.

# GEARBOX G 330-12 KL / 11,63 - 0,77

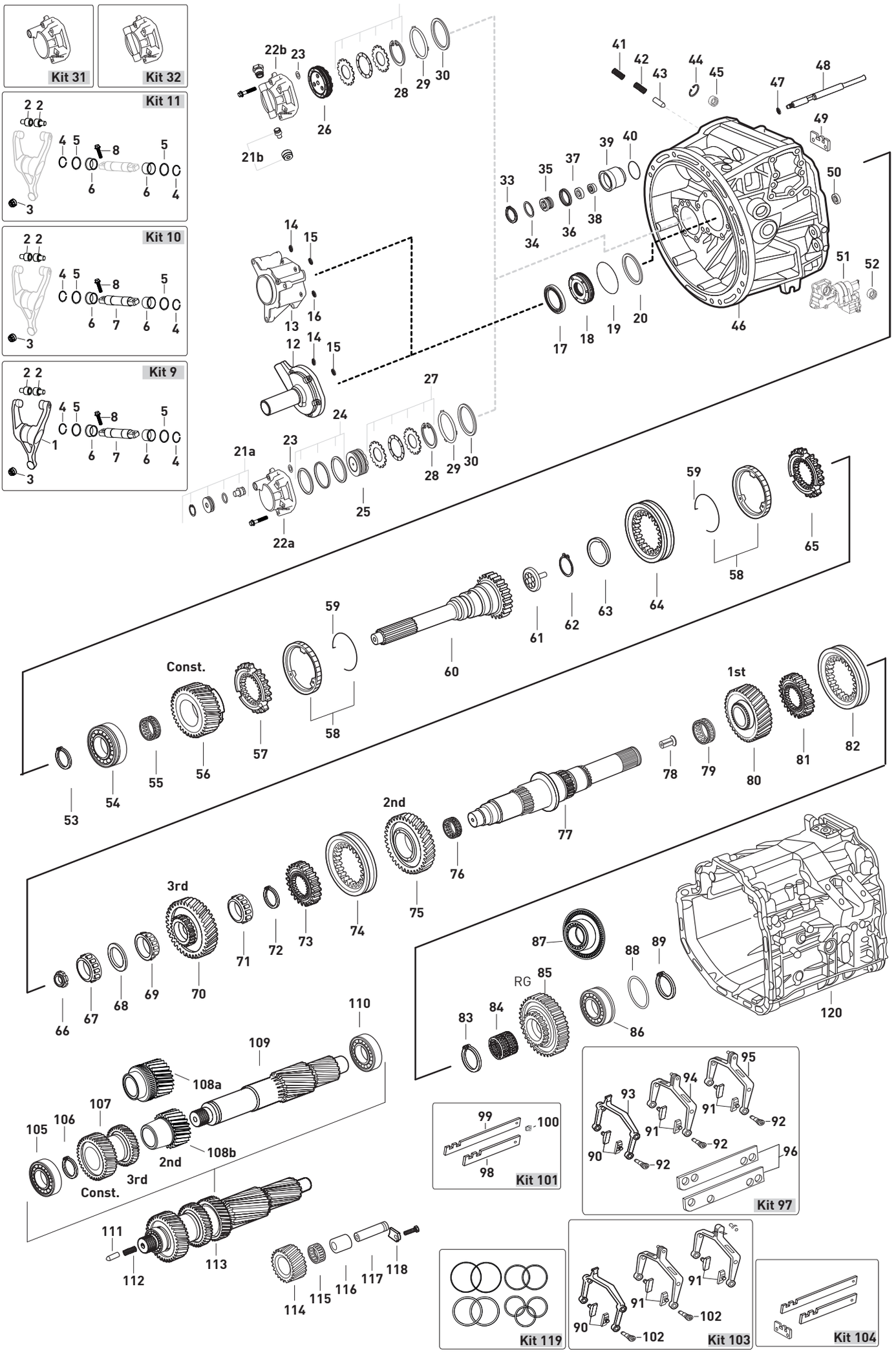




Original parts names, oem numbers, symbols and descriptions used in this catalogue are for reference purposes only.

| Fig. | Kacmaz No | Oem No | Oem Old No | Pcs. | Ürün Tanımı | Description | Sizes | Not | 715380 | 715381 | 715382 | 715384 | 715388 |
|---|---|---|---|---|---|---|---|---|---|---|---|---|---|
| 49 | | 930 265 0245 | | 1 | VİTES HİLAL ÇITA KİLİTLEMESİ | GUIDE | | | ♦ | | | | |
| 49 | K21.06847 | 960 265 0545 | | 1 | VİTES HİLAL ÇITA KİLİTLEMESİ | GUIDE | | | ♦ | ♦ | ♦ | ♦ | ♦ |
| 50 | K21.04252 | 000 992 7603 | (389 267 0050) | 1 | TAKVİYE HİLAL MİL BURCU | BUSHING | 21X27X16mm | | ♦ | | ♦ | | ♦ |
| 50 | | 004 992 6601 | | 1 | TAKVİYE HİLAL MİL BURCU | BUSHING | | | | ♦ | | ♦ | |
| 51 | | 930 260 0263 | (002 260 3863) | 1 | VİTES KULESİ KOMPLE | SHIFT CYLINDER | | | ♦ | | ♦ | | ♦ |
| | | | (930 260 0063) | | | | | | | | | | |
| | | | (930 260 0163) | | | | | | | | | | |
| 52 | | 021 981 4710 | (013 981 7110) | 1 | VİTES KULE BİLYASI | | 40X47X20 | | ♦ | | ♦ | | ♦ |
| | | | (018 981 1010) | | | | | | | | | | |
| | | | (018 981 1510) | | | | | | | | | | |
| 53 | K21.04347 | 387 262 8673 | | 1 | PRİZDİREK ÖN BİLYA SEKMANI | RETAINING RING | 3,15mm | | ♦ | ♦ | ♦ | ♦ | ♦ |
| 53 | K21.04346 | 387 262 8773 | | 1 | PRİZDİREK ÖN BİLYA SEKMANI | RETAINING RING | 3,20mm | | ♦ | ♦ | ♦ | ♦ | ♦ |
| 53 | K21.07015 | 387 262 8873 | | 1 | PRİZDİREK ÖN BİLYA SEKMANI | RETAINING RING | 3,25mm | | ♦ | ♦ | ♦ | ♦ | ♦ |
| 53 | K21.04348 | 387 262 8973 | | 1 | PRİZDİREK ÖN BİLYA SEKMANI | RETAINING RING | 3,30mm | | ♦ | ♦ | ♦ | ♦ | ♦ |
| 53 | K21.07016 | 387 262 9073 | | 1 | PRİZDİREK ÖN BİLYA SEKMANI | RETAINING RING | 3,35mm | | ♦ | ♦ | ♦ | ♦ | ♦ |
| 53 | K21.04349 | 387 262 9173 | | 1 | PRİZDİREK ÖN BİLYA SEKMANI | RETAINING RING | 3,40mm | | ♦ | ♦ | ♦ | ♦ | ♦ |
| 53 | K21.07017 | 387 262 9273 | | 1 | PRİZDİREK ÖN BİLYA SEKMANI | RETAINING RING | 3,45mm | | ♦ | ♦ | ♦ | ♦ | ♦ |
| 53 | K21.04350 | 387 262 9373 | | 1 | PRİZDİREK ÖN BİLYA SEKMANI | RETAINING RING | 3,50mm | | ♦ | ♦ | ♦ | ♦ | ♦ |
| 54 | K21.03618 | 011 981 1305 | (014 981 9005) | 1 | PRİZDİREK ÖN BİLYA | ROLLER BEARING | 75X140X34,25mm | | ♦ | ♦ | ♦ | ♦ | ♦ |
| | | | (008 981 8605) | | | | | | | | | | |
| | | | (008 981 2605) | | | | | | | | | | |
| 55 | K21.03855 | 022 981 7910 | (022 981 5310) | 1 | TAKVİYE MASURA BİLYA | NEEDLE CAGE | 84X90X55mm | | ♦ | ♦ | ♦ | ♦ | ♦ |
| 56 | K21.03578 | 960 262 0717 | (930 262 1717) | 1 | TAKVİYE DİŞLİSİ 40 DİŞ | CONSTANT GEAR 40 T. | | | ♦ | ♦ | ♦ | ♦ | ♦ |
| | | | (960 262 0817) | | | | | | | | | | |
| | | | (948 262 2410) | | | | | | | | | | |
| | | | (948 262 2510) | | | | | | | | | | |
| 57 | K21.03146 | 945 262 8234 | (945 262 5434) | 1 | TAKVİYE SENKROMENÇ | ENGAGING RING | | | ♦ | ♦ | ♦ | ♦ | ♦ |
| 58 | K21.03148 | 947 260 1945 | (947 260 4645) | 2 | TAKVİYE FRENLEME (Mo) | SYNCHRONIZING CONE / Mo | | | ♦ | ♦ | ♦ | ♦ | ♦ |
| | | | (946 262 6137) | | | | | | | | | | |
| 58 | K21.06299 | 947 260 3545 | (947 260 5145) | 2 | TAKVİYE FRENLEME (C) | SYNCHRONIZING CONE / C | | | ♦ | ♦ | ♦ | ♦ | ♦ |
| | | | (947 260 2945) | | | | | | | | | | |
| | | | (947 260 0745) | | | | | | | | | | |
| 59 | K21.03055 | 387 262 0893 | (387 262 0793) | 2 | FRENLEME TELİ | SPRING | | | ♦ | ♦ | ♦ | ♦ | ♦ |
| 60 | K21.03575 | 960 262 5802 | (930 262 0403) | 1 | PRİZDİREK 66 DİŞ | INPUT SHAFT 66 T. | | | ♦ | ♦ | ♦ | ♦ | ♦ |
| | | | (948 262 0602) | | | | | | | | | | |
| | | | (948 262 0202) | | | | | | | | | | |
| 61 | K21.04001 | 976 269 0034 | (960 269 0434) | 1 | PRİZDİREK YAĞ PİPETİ | OIL COLLECTOR | | | ♦ | ♦ | ♦ | ♦ | ♦ |
| 62 | K21.04002 | 000 994 9841 | | 1 | PRİZDİREK YAĞ PİPET SEKMANI | RETAINING RING | | | ♦ | ♦ | ♦ | ♦ | ♦ |
| 63 | K21.03513 | 001 262 0262 | (000 262 8662) | 1 | PRİZDİREK ARKA KEÇE | OIL SEAL | 73,5X101X7mm | | ♦ | ♦ | ♦ | ♦ | ♦ |
| | | | (000 262 9062) | | | | | | | | | | |
| 64 | K21.03151 | 945 262 6523 | (930 262 0523) | 1 | TAKVİYE HALKA | ENGAGING SLEEVE | | | ♦ | ♦ | ♦ | ♦ | ♦ |
| 65 | K21.03576 | 930 262 0234 | (930 262 0034) | 1 | TAKVİYE SENKROMENÇ | ENGAGING RING | | | ♦ | ♦ | ♦ | ♦ | ♦ |
| 66 | K21.03432 | 945 990 0250 | (945 990 0150) | 1 | KAMALI MİL SOMUNU | NUT | M30X1,5 | | ♦ | ♦ | ♦ | ♦ | ♦ |
| 67 | K21.03632 | 020 981 5205 | (017 981 1305) | 1 | KAMALI MİL UÇ BİLYA | ROLLER BEARING | 39,69X40,39mm | | ♦ | ♦ | ♦ | ♦ | ♦ |
| 68 | K21.04024 | 389 262 3352 | | 1 | KAMALI MİL AYAR PULU | THRUST WASHER | 2,50mm | | ♦ | ♦ | ♦ | ♦ | ♦ |
| 68 | K21.04025 | 389 262 3252 | | 1 | KAMALI MİL AYAR PULU | THRUST WASHER | 2,00mm | | ♦ | ♦ | ♦ | ♦ | ♦ |
| 68 | K21.04026 | 389 262 3152 | | 1 | KAMALI MİL AYAR PULU | THRUST WASHER | 1,95mm | | ♦ | ♦ | ♦ | ♦ | ♦ |
| 68 | K21.04027 | 389 262 3052 | | 1 | KAMALI MİL AYAR PULU | THRUST WASHER | 1,90mm | | ♦ | ♦ | ♦ | ♦ | ♦ |
| 68 | K21.04028 | 389 262 2952 | | 1 | KAMALI MİL AYAR PULU | THRUST WASHER | 1,85mm | | ♦ | ♦ | ♦ | ♦ | ♦ |
| 68 | K21.04092 | 389 262 2455 | | 1 | KAMALI MİL AYAR PULU | THRUST WASHER | 1,82mm | | ♦ | ♦ | ♦ | ♦ | ♦ |
| 68 | K21.04093 | 389 262 2355 | | 1 | KAMALI MİL AYAR PULU | THRUST WASHER | 1,79mm | | ♦ | ♦ | ♦ | ♦ | ♦ |
| 68 | K21.04094 | 389 262 2255 | | 1 | KAMALI MİL AYAR PULU | THRUST WASHER | 1,76mm | | ♦ | ♦ | ♦ | ♦ | ♦ |
| 68 | K21.04095 | 389 262 2155 | | 1 | KAMALI MİL AYAR PULU | THRUST WASHER | 1,73mm | | ♦ | ♦ | ♦ | ♦ | ♦ |
| 68 | K21.04096 | 389 262 2055 | | 1 | KAMALI MİL AYAR PULU | THRUST WASHER | 1,67mm | | ♦ | ♦ | ♦ | ♦ | ♦ |
| 68 | K21.04097 | 389 262 1955 | | 1 | KAMALI MİL AYAR PULU | THRUST WASHER | 1,64mm | | ♦ | ♦ | ♦ | ♦ | ♦ |

NOTES :
Parts coded with alphabetic letters are used together.

GEARBOX TYPE:
715380 - 715382 - G330/12 KLAUEN OLD
715381 - 715384 - 715388 G330/12 KLAUEN NEW

NOTLAR :
Alfabetik harf ile kodlanan parçalar birlikte kullanılır.

ŞANZIMAN TİPLERİ:
715380 - 715382 - G330/12 KLAUEN OLD
715381 - 715384 - 715388 G330/12 KLAUEN NEW





Original parts names, oem numbers, symbols and descriptions used in this catalogue are for reference purposes only.

# GEARBOX G 330-12 KL / 11,63 - 0,77

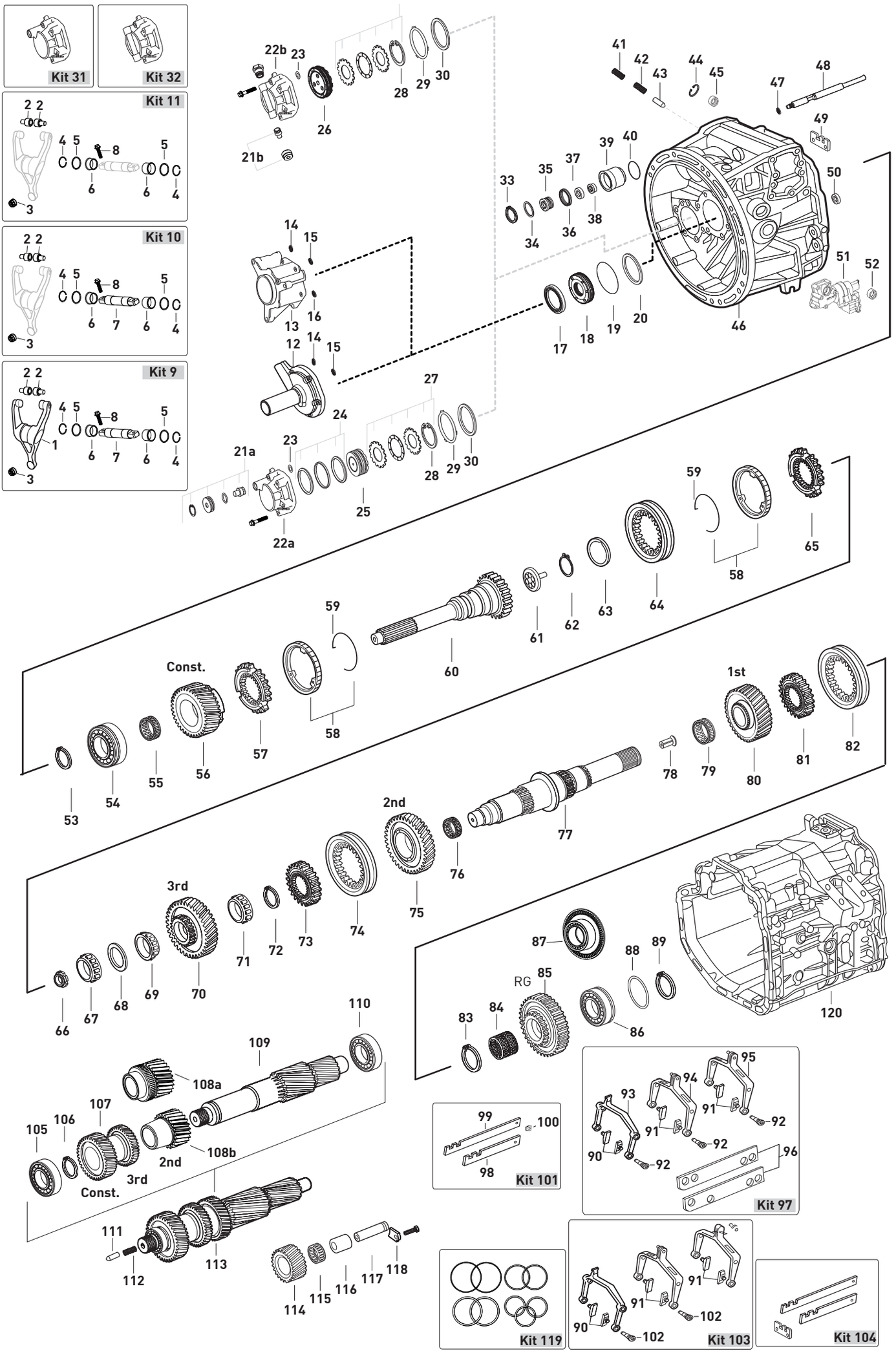




Original parts names, oem numbers, symbols and descriptions used in this catalogue are for reference purposes only.

| Fig. | Kacmaz No | Oem No | Oem Old No | Pcs. | Ürün Tanımı | Description | Sizes | Not | 715380 | 715381 | 715382 | 715384 | 715388 |
|---|---|---|---|---|---|---|---|---|---|---|---|---|---|
| 68 | K21.04098 | 389 262 1855 | | 1 | KAMALI MİL AYAR PULU | THRUST WASHER | 1,61mm | | ♦ | ♦ | ♦ | ♦ | ♦ |
| 68 | K21.04099 | 389 262 1755 | | 1 | KAMALI MİL AYAR PULU | THRUST WASHER | 1,58mm | | ♦ | ♦ | ♦ | ♦ | ♦ |
| 68 | K21.04100 | 389 262 2352 | | 1 | KAMALI MİL AYAR PULU | THRUST WASHER | 1,55mm | | ♦ | ♦ | ♦ | ♦ | ♦ |
| 68 | K21.04101 | 389 262 1655 | | 1 | KAMALI MİL AYAR PULU | THRUST WASHER | 1,52mm | | ♦ | ♦ | ♦ | ♦ | ♦ |
| 68 | K21.04102 | 389 262 1555 | | 1 | KAMALI MİL AYAR PULU | THRUST WASHER | 1,49mm | | ♦ | ♦ | ♦ | ♦ | ♦ |
| 68 | K21.04103 | 389 262 1455 | | 1 | KAMALI MİL AYAR PULU | THRUST WASHER | 1,46mm | | ♦ | ♦ | ♦ | ♦ | ♦ |
| 68 | K21.04104 | 389 262 1355 | | 1 | KAMALI MİL AYAR PULU | THRUST WASHER | 1,43mm | | ♦ | ♦ | ♦ | ♦ | ♦ |
| 68 | K21.04105 | 389 262 2052 | | 1 | KAMALI MİL AYAR PULU | THRUST WASHER | 1,40mm | | ♦ | ♦ | ♦ | ♦ | ♦ |
| 68 | K21.04106 | 389 262 1952 | | 1 | KAMALI MİL AYAR PULU | THRUST WASHER | 1,35mm | | ♦ | ♦ | ♦ | ♦ | ♦ |
| 68 | K21.04107 | 389 262 2754 | | 1 | KAMALI MİL AYAR PULU | THRUST WASHER | 1,30mm | | ♦ | ♦ | ♦ | ♦ | ♦ |
| 68 | K21.04108 | 389 262 3654 | | 1 | KAMALI MİL AYAR PULU | THRUST WASHER | 1,25mm | | ♦ | ♦ | ♦ | ♦ | ♦ |
| 68 | K21.04109 | 389 262 3554 | | 1 | KAMALI MİL AYAR PULU | THRUST WASHER | 1,20mm | | ♦ | ♦ | ♦ | ♦ | ♦ |
| 68 | K21.04110 | 389 262 3454 | | 1 | KAMALI MİL AYAR PULU | THRUST WASHER | 1,15mm | | ♦ | ♦ | ♦ | ♦ | ♦ |
| 68 | K21.04111 | 389 262 3354 | | 1 | KAMALI MİL AYAR PULU | THRUST WASHER | 1,10mm | | ♦ | ♦ | ♦ | ♦ | ♦ |
| 68 | K21.04112 | 389 262 3254 | | 1 | KAMALI MİL AYAR PULU | THRUST WASHER | 1,05mm | | ♦ | ♦ | ♦ | ♦ | ♦ |
| 68 | K21.04113 | 389 262 2854 | | 1 | KAMALI MİL AYAR PULU | THRUST WASHER | 0,50mm | | ♦ | ♦ | ♦ | ♦ | ♦ |
| 68 | K21.94113 | | | 1 | KAMALI MİL AYAR PULU | THRUST WASHER | 0,40mm | | ♦ | ♦ | ♦ | ♦ | ♦ |
| 68 | K21.84113 | | | 1 | KAMALI MİL AYAR PULU | THRUST WASHER | 0,30mm | | ♦ | ♦ | ♦ | ♦ | ♦ |
| 68 | K21.74113 | | | 1 | KAMALI MİL AYAR PULU | THRUST WASHER | 0,20mm | | ♦ | ♦ | ♦ | ♦ | ♦ |
| 68 | K21.64113 | | | 1 | KAMALI MİL AYAR PULU | THRUST WASHER | 0,10mm | | ♦ | ♦ | ♦ | ♦ | ♦ |
| 69 | K21.03620 | 017 981 5105 | (015 981 6105) | 1 | 3.VİTES DİŞLİ ÖN BİLYA | ROLLER BEARING | 50X41,3mm | | ♦ | ♦ | ♦ | ♦ | ♦ |
| | | | (014 981 2605) | | | | | | | | | | |
| 70 | K21.03580 | 960 262 1017 | (930 262 3617) | 1 | 3.VİTES DİŞLİSİ 31 DİŞ | GEAR 3rd 31 T. | | | ♦ | ♦ | ♦ | ♦ | ♦ |
| | | | (960 262 0917) | | | | | | | | | | |
| | | | (948 262 2810) | | | | | | | | | | |
| | | | (948 262 2910) | | | | | | | | | | |
| 71 | K21.03664 | 017 981 7105 | | 1 | 3.VİTES DİŞLİ ARKA BİLYA | ROLLER BEARING | 55X29,8mm | | ♦ | ♦ | ♦ | ♦ | ♦ |
| 72 | K21.04343 | 387 262 2073 | | 1 | 2./3.VİTES YILDIZ DİŞLİ SEKMANI | RETAINING RING | 2,40mm | | ♦ | ♦ | ♦ | ♦ | ♦ |
| 72 | K21.06687 | 387 262 2173 | | 1 | 2./3.VİTES YILDIZ DİŞLİ SEKMANI | RETAINING RING | 2,45mm | | ♦ | ♦ | ♦ | ♦ | ♦ |
| 72 | K21.04342 | 007 994 0041 | (387 262 2273) | 1 | 2./3.VİTES YILDIZ DİŞLİ SEKMANI | RETAINING RING | 2,50mm | | ♦ | ♦ | ♦ | ♦ | ♦ |
| 72 | K21.04359 | 387 262 2373 | | 1 | 2./3.VİTES YILDIZ DİŞLİ SEKMANI | RETAINING RING | 2,55mm | | ♦ | ♦ | ♦ | ♦ | ♦ |
| 72 | K21.04345 | 387 262 2473 | | 1 | 2./3.VİTES YILDIZ DİŞLİ SEKMANI | RETAINING RING | 2,60mm | | ♦ | ♦ | ♦ | ♦ | ♦ |
| 72 | K21.07021 | 387 262 2573 | | 1 | 2./3.VİTES YILDIZ DİŞLİ SEKMANI | RETAINING RING | 2,65mm | | ♦ | ♦ | ♦ | ♦ | ♦ |
| 72 | K21.04344 | 387 262 7973 | | 1 | 2./3.VİTES YILDIZ DİŞLİ SEKMANI | RETAINING RING | 2,70mm | | ♦ | ♦ | ♦ | ♦ | ♦ |
| 72 | K21.07022 | 387 262 8073 | | 1 | 2./3.VİTES YILDIZ DİŞLİ SEKMANI | RETAINING RING | 2,75mm | | ♦ | ♦ | ♦ | ♦ | ♦ |
| 72 | K21.06588 | 387 262 8173 | | 1 | 2./3.VİTES YILDIZ DİŞLİ SEKMANI | RETAINING RING | 2,80mm | | ♦ | ♦ | ♦ | ♦ | ♦ |
| 73 | K21.03581 | 960 262 3135 | (945 262 3635) | 1 | 2./3.VİTES YILDIZ DİŞLİ | SYNCHRONIZER HUB | | | ♦ | ♦ | ♦ | ♦ | ♦ |
| | | | (960 262 2235) | | | | | | | | | | |
| | | | (930 262 0835) | | | | | | | | | | |
| 74 | K21.03582 | 960 262 1523 | (930 262 0123) | 1 | 2./3.VİTES HALKASI | ENGAGING SLEEVE | | | ♦ | ♦ | ♦ | ♦ | ♦ |
| | | | (930 262 0723) | | | | | | | | | | |
| | | | (945 262 5223) | | | | | | | | | | |
| 75 | K21.03583 | 930 262 0112 | (930 262 0612) | 1 | 2.VİTES DİŞLİSİ 38 DİŞ | GEAR 2nd 38 T. | | | ♦ | ♦ | ♦ | ♦ | ♦ |
| | | | (948 262 0212) | | | | | | | | | | |
| 76 | K21.03859 | 023 981 5210 | (022 981 5810) | 1 | 2.VİTES MASURA BİLYA | NEEDLE CAGE | 85X93X60mm | | ♦ | ♦ | ♦ | ♦ | ♦ |
| | | | (022 981 8510) | | | | | | | | | | |
| | | | (022 981 5410) | | | | | | | | | | |
| 77 | K21.06331 | 930 262 0205 | | 1 | KAMALI MİL | MAIN SHAFT | | (A) | ♦ | | | | |
| 77 | K21.03584 | 930 262 0805 | (930 262 2205) | 1 | KAMALI MİL | MAIN SHAFT | | (B) | ♦ | | ♦ | | |
| 77 | K21.06980 | 960 262 0105 | (960 262 3805) | 1 | KAMALI MİL | MAIN SHAFT | | (C) | | ♦ | | ♦ | ♦ |
| | | | (948 262 0205) | | | | | | | | | | |
| 78 | K21.04364 | 001 990 2759 | | 1 | KAMALI MİL YAĞ BORUSU | OIL PIPE | | | ♦ | ♦ | ♦ | ♦ | ♦ |
| 79 | K21.06369 | 024 981 2410 | (022 981 5910) | 1 | 1.VİTES MASURA BİLYA | NEEDLE CAGE | 85X93X73mm | | ♦ | ♦ | ♦ | ♦ | ♦ |
| | | | (022 981 5510) | | | | | | | | | | |
| 80 | K21.03586 | 930 262 0511 | (930 262 0811) | 1 | 1.VİTES DİŞLİSİ 41 DİŞ | GEAR 1st 41 T. | | | ♦ | ♦ | ♦ | ♦ | ♦ |

NOTES :
Parts coded with alphabetic letters are used together.

GEARBOX TYPE:
715380 - 715382 - G330/12 KLAUEN OLD
715381 - 715384 - 715388 G330/12 KLAUEN NEW

NOTLAR :
Alfabetik harf ile kodlanan parçalar birlikte kullanılır.

ŞANZIMAN TİPLERİ:
715380 - 715382 - G330/12 KLAUEN OLD
715381 - 715384 - 715388 G330/12 KLAUEN NEW





Original parts names, oem numbers, symbols and descriptions used in this catalogue are for reference purposes only.

# GEARBOX G 330-12 KL / 11,63 - 0,77

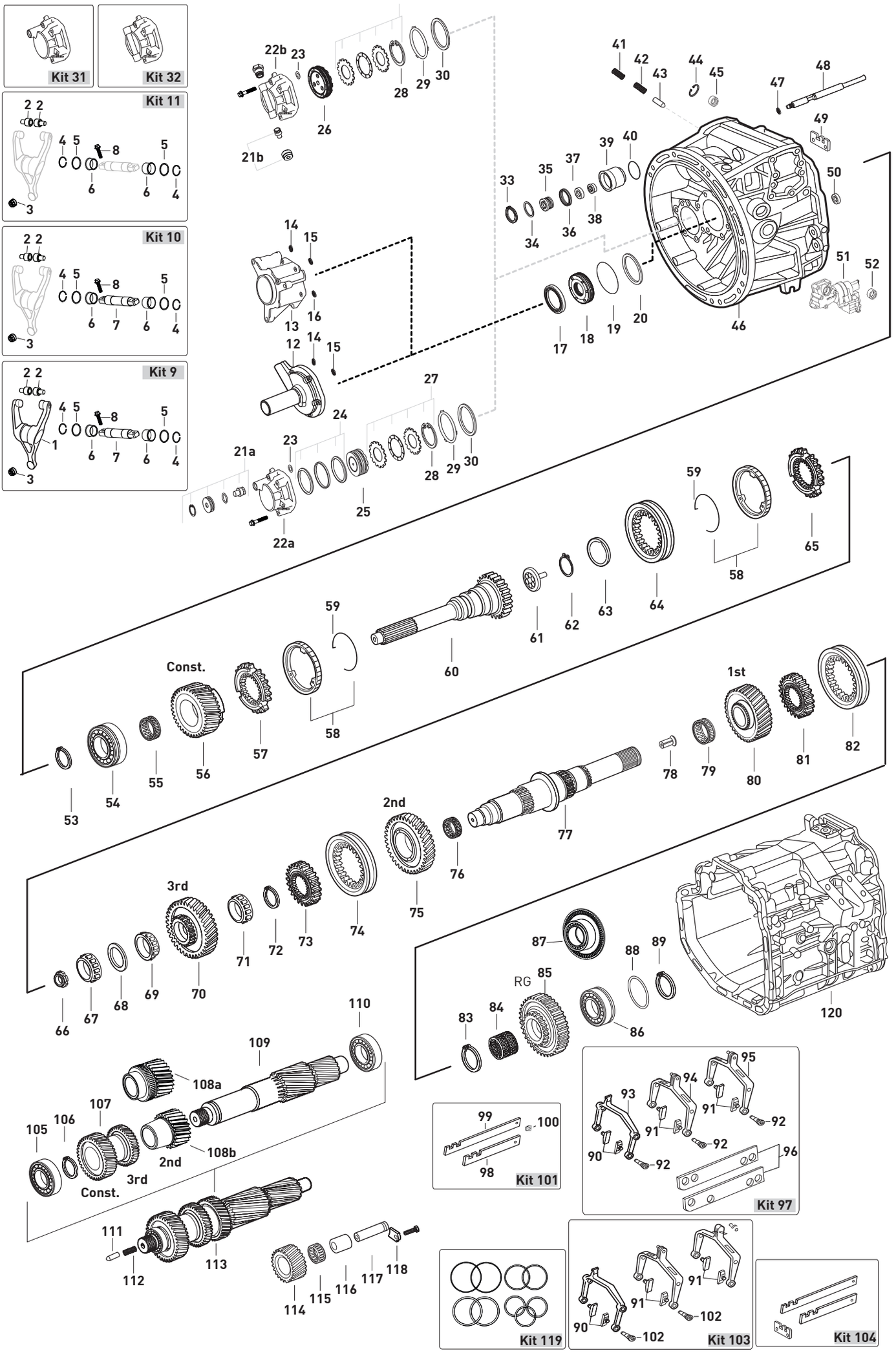




Original parts names, oem numbers, symbols and descriptions used in this catalogue are for reference purposes only.

| Fig. | Kacmaz No | Oem No | Oem Old No | Pcs. | Ürün Tanımı | Description | Sizes | Not | 715380 | 715381 | 715382 | 715384 | 715388 |
|---|---|---|---|---|---|---|---|---|---|---|---|---|---|
| 81 | K21.03581 | 960 262 3135 | (945 262 3635) | 1 | 1./GERİ VİTES YILDIZ DİŞLİ | SYNCHRONIZER HUB | | | ♦ | ♦ | ♦ | ♦ | ♦ |
| | | | (960 262 2235) | | | | | | | | | | |
| | | | (930 262 0835) | | | | | | | | | | |
| 82 | K21.03582 | 960 262 1523 | (930 262 0123) | 1 | 1./GERİ VİTES HALKASI | ENGAGING SLEEVE | | | ♦ | ♦ | ♦ | ♦ | ♦ |
| | | | (930 262 0723) | | | | | | | | | | |
| | | | (945 262 5223) | | | | | | | | | | |
| 83 | K21.04343 | 387 262 2073 | | 1 | 1./GERİ VİTES YILDIZ DİŞLİ SEKMANI | RETAINING RING | 2,40mm | | ♦ | ♦ | ♦ | ♦ | ♦ |
| 83 | K21.06687 | 387 262 2173 | | 1 | 1./GERİ VİTES YILDIZ DİŞLİ SEKMANI | RETAINING RING | 2,45mm | | ♦ | ♦ | ♦ | ♦ | ♦ |
| 83 | K21.04342 | 007 994 0041 | (387 262 2273) | 1 | 1./GERİ VİTES YILDIZ DİŞLİ SEKMANI | RETAINING RING | 2,50mm | | ♦ | ♦ | ♦ | ♦ | ♦ |
| 83 | K21.04359 | 387 262 2373 | | 1 | 1./GERİ VİTES YILDIZ DİŞLİ SEKMANI | RETAINING RING | 2,55mm | | ♦ | ♦ | ♦ | ♦ | ♦ |
| 83 | K21.04345 | 387 262 2473 | | 1 | 1./GERİ VİTES YILDIZ DİŞLİ SEKMANI | RETAINING RING | 2,60mm | | ♦ | ♦ | ♦ | ♦ | ♦ |
| 83 | K21.07021 | 387 262 2573 | | 1 | 1./GERİ VİTES YILDIZ DİŞLİ SEKMANI | RETAINING RING | 2,65mm | | ♦ | ♦ | ♦ | ♦ | ♦ |
| 83 | K21.04344 | 387 262 7973 | | 1 | 1./GERİ VİTES YILDIZ DİŞLİ SEKMANI | RETAINING RING | 2,70mm | | ♦ | ♦ | ♦ | ♦ | ♦ |
| 83 | K21.07022 | 387 262 8073 | | 1 | 1./GERİ VİTES YILDIZ DİŞLİ SEKMANI | RETAINING RING | 2,75mm | | ♦ | ♦ | ♦ | ♦ | ♦ |
| 83 | K21.06588 | 387 262 8173 | | 1 | 1./GERİ VİTES YILDIZ DİŞLİ SEKMANI | RETAINING RING | 2,80mm | | ♦ | ♦ | ♦ | ♦ | ♦ |
| 84 | K21.03858 | 022 981 6010 | (022 981 5610) | 1 | GERİ VİTES MASURA BİLYA | NEEDLE CAGE | 75X83X48mm | | ♦ | ♦ | ♦ | ♦ | ♦ |
| 85 | K21.06330 | 930 262 0033 | | 1 | GERİ VİTES DİŞLİSİ 45 DİŞ | REVERSE GEAR 45 T. | | (A) | ♦ | | | | |
| 85 | K21.03587 | 930 262 0133 | (948 262 0233) | 1 | GERİ VİTES DİŞLİSİ 45 DİŞ | REVERSE GEAR 45 T. | | (B)(C) | ♦ | ♦ | ♦ | ♦ | ♦ |
| 86 | K21.03623 | 014 981 6105 | (016 981 1305) | 1 | KAMALI MİL ARKA BİLYA | ROLLER BEARING | 60X130X33,2mm | (A) | ♦ | | | | |
| | | | (014 981 7505) | | | | | | | | | | |
| 86 | K21.03661 | 002 981 8181 | | 1 | KAMALI MİL ARKA BİLYA | ROLLER BEARING | 60X130X51mm | (B) | ♦ | | ♦ | | |
| 87 | K21.03666 | 018 981 6805 | | 1 | KAMALI MİL ARKA BİLYA | ROLLER BEARING | 60X130X35,2mm | (B) | ♦ | | ♦ | | |
| 87 | K21.03861 | 003 980 0202 | | 1 | KAMALI MİL ARKA BİLYA | ROLLER BEARING | 60x130x51mm | (C) | | ♦ | | ♦ | ♦ |
| 88 | K21.04182 | 389 262 3552 | | 1 | KAMALI MİL ARKA BİLYA RAYNELİ | THRUST WASHER | 0,10mm | | ♦ | ♦ | ♦ | ♦ | ♦ |
| 88 | K21.04184 | 389 262 3652 | | 1 | KAMALI MİL ARKA BİLYA RAYNELİ | THRUST WASHER | 0,15mm | | ♦ | ♦ | ♦ | ♦ | ♦ |
| 88 | K21.04152 | 389 262 3752 | | 1 | KAMALI MİL ARKA BİLYA RAYNELİ | THRUST WASHER | 0,20mm | | ♦ | ♦ | ♦ | ♦ | ♦ |
| 88 | K21.94152 | | | 1 | KAMALI MİL ARKA BİLYA RAYNELİ | THRUST WASHER | 0,30mm | | ♦ | ♦ | ♦ | ♦ | ♦ |
| 88 | K21.04183 | 389 262 3852 | | 1 | KAMALI MİL ARKA BİLYA RAYNELİ | THRUST WASHER | 0,40mm | | ♦ | ♦ | ♦ | ♦ | ♦ |
| 88 | K21.94183 | | | 1 | KAMALI MİL ARKA BİLYA RAYNELİ | THRUST WASHER | 0,50mm | | ♦ | ♦ | ♦ | ♦ | ♦ |
| 88 | K21.84183 | | | 1 | KAMALI MİL ARKA BİLYA RAYNELİ | THRUST WASHER | 0,60mm | | ♦ | ♦ | ♦ | ♦ | ♦ |
| 88 | K21.74183 | | | 1 | KAMALI MİL ARKA BİLYA RAYNELİ | THRUST WASHER | 0,70mm | | ♦ | ♦ | ♦ | ♦ | ♦ |
| 88 | K21.04185 | 389 262 3952 | | 1 | KAMALI MİL ARKA BİLYA RAYNELİ | THRUST WASHER | 0,80mm | | ♦ | ♦ | ♦ | ♦ | ♦ |
| 88 | K21.06718 | 010 990 8382 | | 1 | KAMALI MİL ARKA BİLYA RAYNELİ | THRUST WASHER | 1,00mm | | ♦ | ♦ | ♦ | ♦ | ♦ |
| 89 | K21.04331 | 007 994 1841 | (006 994 9941) | 1 | KAMALI MİL ARKA BİLYA SEKMANI | RETAINING RING | 2,50mm | | ♦ | ♦ | ♦ | ♦ | ♦ |
| 90 | K21.03431 | 960 265 0049 | (947 265 0349) | 2 | TAKVİYE HİLAL PABUCU | SLIDING PAD | | | ♦ | ♦ | ♦ | ♦ | ♦ |
| | | | (389 265 2749) | | | | | | | | | | |
| 91 | K21.03565 | 947 265 0449 | | 4 | 1./2./3./GERİ VİTES HİLAL PABUCU | SLIDING PAD | | | ♦ | ♦ | ♦ | ♦ | ♦ |
| 92 | K21.04307 | 960 265 0774 | (945 265 1274) | 6 | HİLAL CİVATASI | PIN | | | ♦ | ♦ | ♦ | ♦ | ♦ |
| | | | (945 265 2974) | | | | | | | | | | |
| | | | (945 265 2774) | | | | | | | | | | |
| 93 | | 930 260 0330 | | 1 | TAKVİYE VİTES HİLALİ | SHIFTING FORK | | | ♦ | | | | |
| 94 | | 930 260 0430 | | 1 | 2./ 3.VİTES HİLALİ | SHIFTING FORK | | | ♦ | | | | |
| 95 | | 930 265 0201 | | 1 | 1./R.VİTES HİLALİ | SHIFTING FORK | | | ♦ | | | | |
| 96 | | 930 265 0032 | | Kit | VİTES HİLAL ÇITA TAKIMI | REPAIR KIT | | | ♦ | | | | |
| 97 | | 930 260 1230 | | Kit | VİTES HİLAL TAKIMI | REPAIR KIT | | | ♦ | | | | |
| 98 | | 930 265 1204 | (930 265 0304) | 1 | 2./3.VİT.HİLAL ÇITASI | SHIFTING ROD | | | ♦ | | | | |
| 99 | | 930 265 0804 | (930 265 0404) | 1 | 1./R.VİT.HİLAL ÇITASI | SHIFTING ROD | | | ♦ | | | | |
| 100 | | 912007 012000 | | 1 | 1./R.VİT.HİLAL ÇITA KİTLEMESİ | BRACKET | | | ♦ | | | | |
| 101 | | 930 260 0231 | | 1 | VİTES HİLAL ÇITA TAKIMI | REPAIR KIT | | | ♦ | | | | |
| 102 | K21.04307 | 960 265 0774 | (945 265 1274) | 4 | HİLAL CİVATASI | PIN | | | | ♦ | ♦ | ♦ | ♦ |
| | | | (945 265 2974) | | | | | | | | | | |
| | | | (945 265 2774) | | | | | | | | | | |
| 103 | | 960 260 3030 | | Kit | VİTES HİLAL TAKIMI | REPAIR KIT | | | | ♦ | ♦ | ♦ | ♦ |
| 104 | | 960 260 0231 | | 1 | VİTES HİLAL ÇITA TAKIMI | REPAIR KIT | | | | ♦ | ♦ | ♦ | ♦ |
| 105 | K21.03606 | 015 981 9005 | (014 981 1405) | 1 | GRUP MİLİ ÖN BİLYA | ROLLER BEARING | 50,8X100X35mm | | ♦ | ♦ | ♦ | ♦ | ♦ |

NOTES :
Parts coded with alphabetic letters are used together.

GEARBOX TYPE:
715380 - 715382 - G330/12 KLAUEN OLD
715381 - 715384 - 715388 G330/12 KLAUEN NEW

NOTLAR :
Alfabetik harf ile kodlanan parçalar birlikte kullanılır.

ŞANZIMAN TİPLERİ:
715380 - 715382 - G330/12 KLAUEN OLD
715381 - 715384 - 715388 G330/12 KLAUEN NEW





Original parts names, oem numbers, symbols and descriptions used in this catalogue are for reference purposes only.

# GEARBOX G 330-12 KL / 11,63 - 0,77

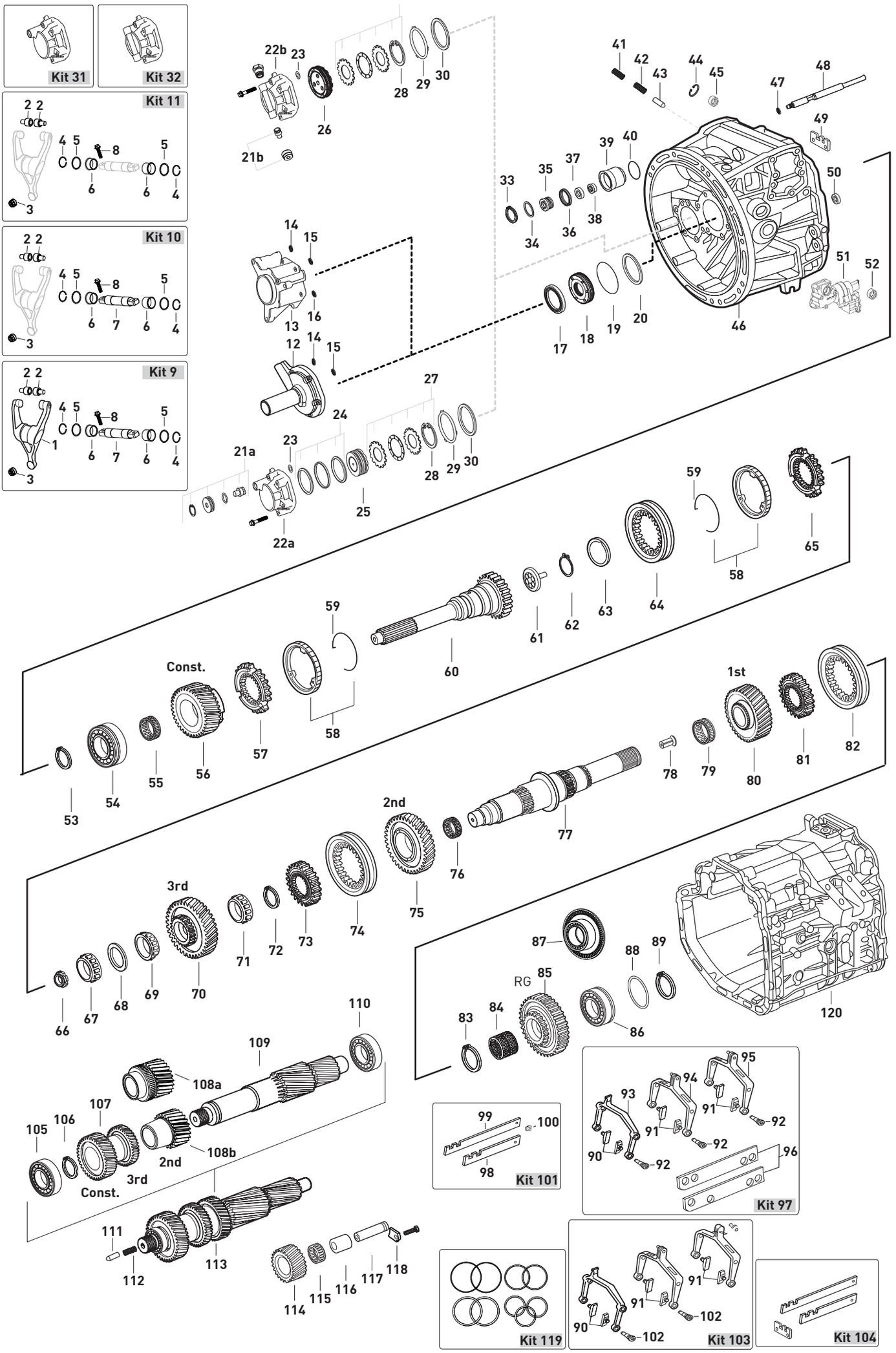




Original parts names, oem numbers, symbols and descriptions used in this catalogue are for reference purposes only.

| Fig. | Kacmaz No | Oem No | Oem Old No | Pcs. | Ürün Tanımı | Description | Sizes | Not | 715380 | 715381 | 715382 | 715384 | 715388 |
|---|---|---|---|---|---|---|---|---|---|---|---|---|---|
| 106 | K21.06425 | 389 994 0041 | | 1 | GRUP MİLİ ÖN BİLYA SEKMANI | RETAINING RING | 2,50mm | | ♦ | ♦ | ♦ | ♦ | ♦ |
| 107 | K21.03600 | 930 263 1910 | | 1 | TAKVİYE VE 3.VİTES DİŞLİ KARŞ.30/30 DİŞ | DOUBLE GEAR 3rd/Const. 30/30 T. | | | ♦ | ♦ | ♦ | ♦ | ♦ |
| 108a | K21.03599 | 930 263 0812 | | 1 | 2.VİT.DİŞLİ KARŞILIĞI 23 DİŞ (Sensörlü) | GEAR 2nd 23 T (With Sensor) | | | ♦ | ♦ | ♦ | ♦ | ♦ |
| 108b | K21.06420 | 930 263 0112 | | 1 | 2.VİT.DİŞLİ KARŞILIĞI 23 DİŞ (Sensörsüz) | GEAR 2nd 23 T (W/Out Sensor) | | | ♦ | ♦ | ♦ | ♦ | ♦ |
| 109 | K21.06341 | 930 263 0402 | | 1 | GRUP MİLİ 15/15/18/16 DİŞ | COUNTER SHAFT 15/15/18/16 T. | | | ♦ | ♦ | ♦ | ♦ | ♦ |
| 110 | K21.03624 | 016 981 1205 | (012 981 9405) | 1 | GRUP MİLİ ARKA BİLYA | ROLLER BEARING | 60X130X33,8mm | | ♦ | ♦ | ♦ | ♦ | ♦ |
| | | | (012 981 9205) | | | | | | | | | | |
| 111 | K21.03492 | 389 267 1174 | (387 267 0074) | 1 | KİLİT FİŞEĞİ | PIN | | | ♦ | ♦ | ♦ | ♦ | ♦ |
| 112 | K21.03500 | 387 993 4401 | (387 993 2501) | 1 | KİLİT YAYI | SPRING | 9,8X63,3mm | | ♦ | ♦ | ♦ | ♦ | ♦ |
| 113 | K21.03597 | 930 260 2324 | (930 260 1824) | Kit | GRUP MİLİ KOMPLE (Devir Sensörlü) | COUNTER SHAFT COMP.(With Speed Sensor) | | | ♦ | ♦ | ♦ | ♦ | ♦ |
| | | | (930 260 0124) | | | | | | | | | | |
| 113 | K21.06424 | | | Kit | GRUP MİLİ KOMPLE (Devir Sensörsüz) | COUNTER SHAFT COMP.(W/Out Speed Sensor) | | | ♦ | ♦ | ♦ | ♦ | ♦ |
| 114 | K21.03589 | 930 263 0231 | (930 263 0031) | 1 | KÜÇÜK GERİ VİTES DİŞLİSİ 24 DİŞ | REVERSE IDLER GEAR 24 T. | | | ♦ | ♦ | ♦ | ♦ | ♦ |
| 115 | K21.03838 | 012 981 8910 | (012 981 9010) | 1 | KÜÇÜK GERİ VİTES MASURA BİLYA | NEEDLE CAGE | 42X50X51mm | | ♦ | ♦ | ♦ | ♦ | ♦ |
| | | | (019 981 1310) | | | | | | | | | | |
| 116 | K21.06031 | 389 263 0850 | | 1 | K.GERİ VİTES MASURA BİLYA ÇANAĞI | BUSHING | 18mm | | ♦ | ♦ | ♦ | ♦ | ♦ |
| 117 | K21.06037 | 976 263 0030 | (976 263 1230) | 1 | KÜÇÜK GERİ VİTES PİMİ | PIN | | | ♦ | ♦ | ♦ | ♦ | ♦ |
| 118 | K21.07010 | 945 263 0041 | | 1 | KÜÇÜK GERİ VİTES PİM KİLİTLEMESİ | KEY | | | ♦ | ♦ | ♦ | ♦ | ♦ |
| 119 | K21.04317 | | | Kit | RAYNEL TAKIMI | WASHER KIT | | | ♦ | ♦ | ♦ | ♦ | ♦ |
| 120 | | 945 261 4026 | | 1 | ŞANZIMAN ORTA GÖVDE | HOUSING | | | ♦ | | | | |
| 120 | | 945 260 7112 | (945 261 6126) | 1 | ŞANZIMAN ORTA GÖVDE | HOUSING | | | ♦ | | | | |
| 120 | | 945 261 3926 | | 1 | ŞANZIMAN ORTA GÖVDE | HOUSING | | | ♦ | | | | |
| 120 | | 945 261 5326 | | 1 | ŞANZIMAN ORTA GÖVDE | HOUSING | | | ♦ | | ♦ | | |
| 120 | | 945 260 7212 | | 1 | ŞANZIMAN ORTA GÖVDE | HOUSING | | | ♦ | | | | |
| 120 | | 960 261 5803 | | 1 | ŞANZIMAN ORTA GÖVDE | HOUSING | | | | ♦ | | | |
| 120 | | 960 261 3129 | | 1 | ŞANZIMAN ORTA GÖVDE | HOUSING | | | | ♦ | | | |
| 120 | | 960 261 2629 | | 1 | ŞANZIMAN ORTA GÖVDE | HOUSING | | | | ♦ | | | |
| 120 | | 960 260 9412 | | 1 | ŞANZIMAN ORTA GÖVDE | HOUSING | | | | ♦ | | | |
| 120 | | 960 260 9612 | | 1 | ŞANZIMAN ORTA GÖVDE | HOUSING | | | | | | | ♦ |
| 120 | | 960 261 9603 | | 1 | ŞANZIMAN ORTA GÖVDE | HOUSING | | | | | | ♦ | |
| 120 | | 960 261 3029 | | 1 | ŞANZIMAN ORTA GÖVDE | HOUSING | | | | | | ♦ | |
| 120 | | 960 260 3223 | | 1 | ŞANZIMAN ORTA GÖVDE | HOUSING | | | | ♦ | | | |

NOTES :
Parts coded with alphabetic letters are used together.

GEARBOX TYPE:
715380 - 715382 - G330/12 KLAUEN OLD
715381 - 715384 - 715388 G330/12 KLAUEN NEW

NOTLAR :
Alfabetik harf ile kodlanan parçalar birlikte kullanılır.

ŞANZIMAN TİPLERİ:
715380 - 715382 - G330/12 KLAUEN OLD
715381 - 715384 - 715388 G330/12 KLAUEN NEW





Original parts names, oem numbers, symbols and descriptions used in this catalogue are for reference purposes only.

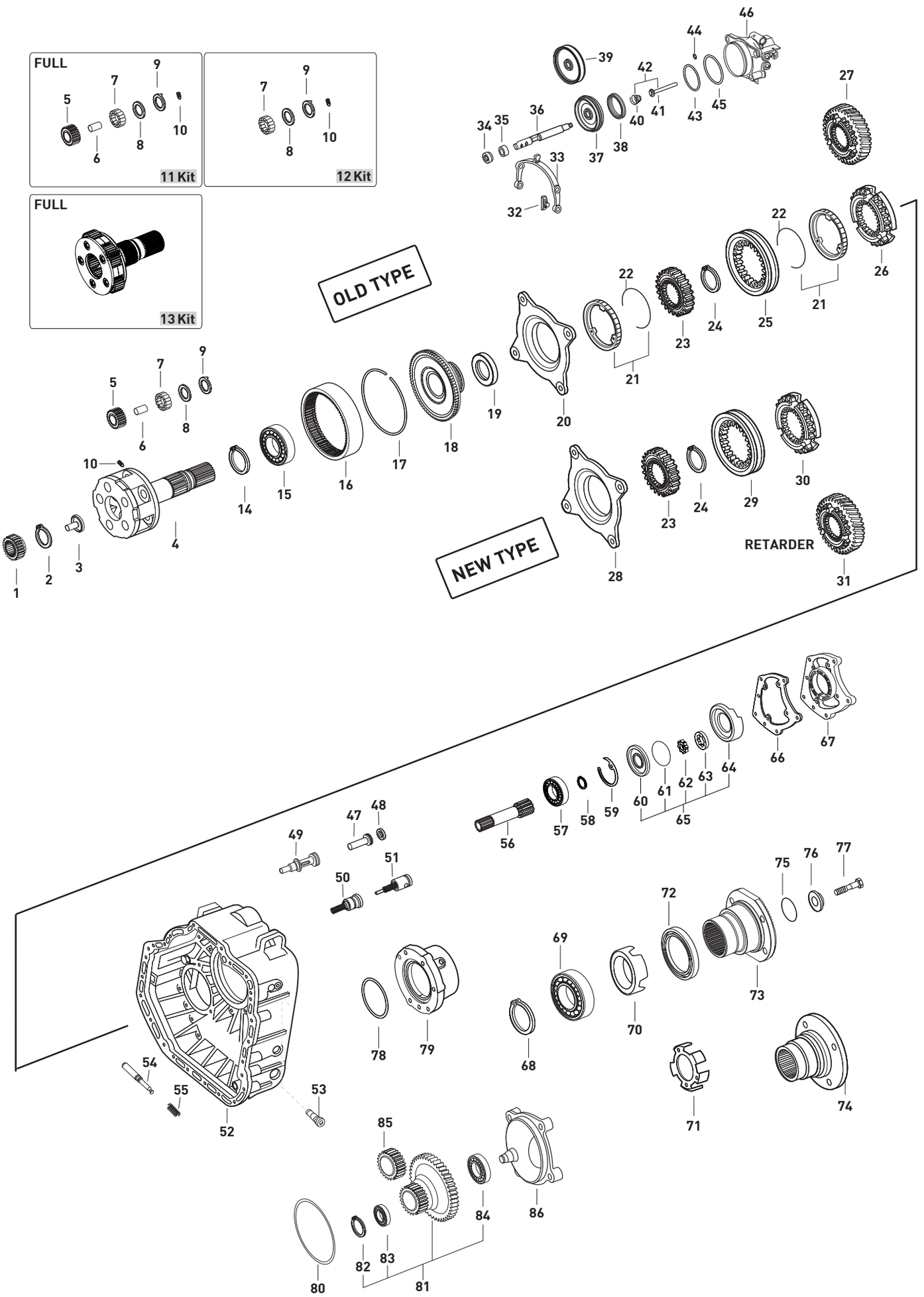




Original parts names, oem numbers, symbols and descriptions used in this catalogue are for reference purposes only.

| Fig. | Kacmaz No | Oem No | Oem Old No | Pcs. | Ürün Tanımı | Description | Sizes | Not | 715380 | 715381 | 715382 | 715384 | 715388 |
|---|---|---|---|---|---|---|---|---|---|---|---|---|---|
| 1 | K21.03169 | 945 262 0909 | (389 262 0809) | 1 | GÜNEŞ DİŞLİ 25 DİŞ | SUN GEAR 25 T. | | | ♦ | | ♦ | | |
| | | | (389 262 0909) | | | | | | | | | | |
| 1 | K21.06506 | 960 262 0009 | (948 262 0209) | 1 | GÜNEŞ DİŞLİ 25 DİŞ | SUN GEAR 25 T. | | | | ♦ | | ♦ | ♦ |
| 2 | K21.04115 | 000472 060000 | | 1 | HEYKEL YAĞ PİPET SEKMANI | SNAP RING | 2,00mm | | ♦ | ♦ | ♦ | ♦ | ♦ |
| 3 | K21.03435 | 945 269 0834 | (389 269 4734) | 1 | ŞANZIMAN HEYKELİ YAĞ PİPETİ | OIL TUBE | | | ♦ | ♦ | ♦ | ♦ | ♦ |
| 4 | K21.03180 | 946 260 3561 | (946 260 3661) | 1 | ŞANZIMAN HEYKELİ (BOŞ) | PLANETARY CARRIER (EMPTY) | | | ♦ | ♦ | ♦ | ♦ | ♦ |
| | | | (945 260 4561) | | | | | | | | | | |
| | | | (945 260 4461) | | | | | | | | | | |
| 5 | K21.03436 | 945 262 0006 | | 5 | HEYKEL KOZA DİŞLİSİ 28 DİŞ | PLANETARY GEAR 28 T. | | | ♦ | ♦ | ♦ | ♦ | ♦ |
| 6 | K21.03437 | 389 262 0407 | | 5 | HEYKEL KOZA DİŞLİ PİMİ | PLANETARY GEAR PIN | | | ♦ | ♦ | ♦ | ♦ | ♦ |
| 7 | K21.03816 | 000 981 4186 | (000 981 4386) | 125 | HEYKEL KOZA DİŞLİ TANE BİLYA | NEEDLE ROLLER | D5X39,6 | | ♦ | ♦ | ♦ | ♦ | ♦ |
| 8 | K21.04074 | 389 262 0162 | (389 262 6462) | 10 | HEYKEL KOZA DİŞLİ PULU | THRUST WASHER | | | ♦ | ♦ | ♦ | ♦ | ♦ |
| | | | (389 262 0562) | | | | | | | | | | |
| 9 | K21.04075 | 945 262 1162 | (945 262 0162) | 10 | HEYKEL KOZA DİŞLİ PULU | THRUST WASHER | | | ♦ | ♦ | ♦ | ♦ | ♦ |
| | | | (389 262 1462) | | | | | | | | | | |
| 10 | K21.03418 | 000914 006109 | | 5 | HEYKEL KOZA DİŞLİ VİDASI | THREADED PIN | M6X14 | | ♦ | ♦ | ♦ | ♦ | ♦ |
| 11 | K21.03178 | 946 260 0097 | (655 260 0197) | Kit | HEYKEL KOZA DİŞLİ TAKIMI | PLANETARY GEAR SET | | | ♦ | ♦ | ♦ | ♦ | ♦ |
| 12 | K21.03663 | | | Kit | HEYKEL BİLYA VE PUL TAKIMI | WASHER KIT | | | ♦ | ♦ | ♦ | ♦ | ♦ |
| 13 | K21.06313 | 945 260 4661 | | Kit | ŞANZIMAN HEYKELİ (DOLU) | PLANETARY CARRIER (FULL) | | | ♦ | ♦ | ♦ | ♦ | ♦ |
| 14 | K21.06864 | 000472 130000 | | 1 | ÇEMBER DİŞLİ BİLYA SEKMANI | RETAINING RING | 130X4mm | | ♦ | ♦ | ♦ | ♦ | ♦ |
| 15 | K21.03614 | 008 981 1325 | (004 981 8725) | 1 | ÇEMBER DİŞLİ BİLYASI | ROLLER BEARING | 90X130X14mm | | ♦ | ♦ | ♦ | ♦ | ♦ |
| | | | (004 981 8825) | | | | | | | | | | |
| | | | (004 981 9425) | | | | | | | | | | |
| 16 | K21.03449 | 945 262 1208 | (945 262 0808) | 1 | ÇEMBER DİŞLİ 85 DİŞ | RING WHEEL 85 T. | | | ♦ | ♦ | ♦ | ♦ | ♦ |
| 17 | K21.04253 | 389 262 0773 | | 1 | ÇEMBER DİŞLİ SEKMANI | LOCK RING | | | ♦ | ♦ | ♦ | ♦ | ♦ |
| 18 | K21.03442 | 930 262 0125 | (389 262 1425) | 1 | PLANET ÇAN DİŞLİ 85 DİŞ | CARRIER HUB 85 T. | | | ♦ | ♦ | ♦ | ♦ | ♦ |
| 19 | K21.04076 | 389 262 0251 | | 1 | ŞANZIMAN HEYKELİ ARA PULU | SPACER RING | | | ♦ | ♦ | ♦ | ♦ | ♦ |
| 20 | K21.03037 | 947 260 3036 | (947 260 0836) | 1 | TABLA SENKROMENÇ | FOLLOWER RING | | | ♦ | ♦ | ♦ | ♦ | ♦ |
| 21 | K21.03185 | 947 260 0945 | | 2 | AĞIR SERİ FRENLEME (Mo) | SYNCHRONIZING CONE / Mo | | | ♦ | ♦ | ♦ | ♦ | ♦ |
| 21 | K21.06273 | 947 260 3045 | | 2 | AĞIR SERİ FRENLEME (Car.) | SYNCHRONIZING CONE / C | | | ♦ | ♦ | ♦ | ♦ | ♦ |
| 22 | K21.03077 | 389 262 0293 | | 2 | FRENLEME TELİ | SPRING | | | ♦ | ♦ | ♦ | ♦ | ♦ |
| 23 | K21.03079 | 389 262 4935 | (389 262 2035) | 1 | AĞIR SERİ YILDIZ DİŞLİ 73 DİŞ | SYNCHRONIZER HUB 73 T. | | | ♦ | ♦ | ♦ | ♦ | ♦ |
| | | | (400 262 0335) | | | | | | | | | | |
| 24 | K21.04356 | 000471 120000 | | 1 | AĞIR SERİ YILDIZ DİŞLİ SEKMANI | RETAINING RING | | | ♦ | ♦ | ♦ | ♦ | ♦ |
| 25 | K21.03033 | 945 262 6923 | (930 262 0623) | 1 | AĞIR SERİ HALKA | ENGAGING SLEEVE | | | ♦ | ♦ | ♦ | ♦ | ♦ |
| 26 | K21.03186 | 945 262 3834 | | 1 | SERİ SENKROMENÇ | ENGAGING RING | | | ♦ | ♦ | ♦ | ♦ | ♦ |
| 27 | K21.03188 | 930 264 0320 | | 1 | RETARDER DİŞLİSİ 64 DİŞ | RETARDER GEAR 64 T. | | | ♦ | | ♦ | | ♦ |
| 27 | K21.06058 | 930 264 0420 | | 1 | RETARDER DİŞLİSİ 59 DİŞ | RETARDER GEAR 59 T. | | | ♦ | | ♦ | | ♦ |
| 28 | K21.06592 | 960 260 2336 | | 1 | TABLA SENKROMENÇ | FOLLOWER RING | | | | ♦ | | ♦ | |
| 29 | K21.06594 | 960 262 1323 | | 1 | AĞIR SERİ HALKA | ENGAGING SLEEVE | | | | ♦ | | ♦ | |
| 30 | | 960 262 2834 | | 1 | SERİ SENKROMENÇ | ENGAGING RING | | | | ♦ | | ♦ | |
| 31 | K21.06565 | 960 264 2720 | | 1 | RETARDER DİŞLİSİ | RETARDER GEAR | | | | ♦ | | | |
| 32 | K21.03431 | 960 265 0049 | (947 265 0349) | 2 | AĞIR SERİ HİLAL PABUCU | SLIDING PAD | | | ♦ | ♦ | ♦ | ♦ | ♦ |
| | | | (389 265 2749) | | | | | | | | | | |
| 33 | K21.06324 | 947 265 1901 | (947 265 0901) | 1 | AĞIR SERİ HİLALİ | SHIFTING FORK | | | ♦ | ♦ | ♦ | ♦ | ♦ |
| 33 | | 960 265 3501 | | 1 | AĞIR SERİ HİLALİ | SHIFTING FORK | | | | ♦ | | ♦ | |
| 34 | K21.03523 | 000 267 0197 | (000 267 0397) | 1 | AĞIR SERİ HİLAL MİL KEÇESİ | OIL SEAL | 22X32X8mm | | ♦ | ♦ | ♦ | ♦ | ♦ |
| 35 | K21.04178 | 387 267 0650 | (387 267 0250) | 1 | AĞIR SERİ HİLAL MİL BURCU | BUSHING | 34x22x8mm | | ♦ | ♦ | ♦ | ♦ | ♦ |
| 36 | | 945 267 2117 | (389 267 7317) | 1 | AĞIR SERİ HİLAL MİLİ | SHIFTING ROD | | | ♦ | ♦ | ♦ | ♦ | |
| 36 | K21.06492 | 930 267 0217 | (945 267 2217) | 1 | AĞIR SERİ HİLAL MİLİ | SHIFTING ROD | | | ♦ | ♦ | ♦ | | |
| 36 | | 960 267 3117 | | 1 | AĞIR SERİ HİLAL MİLİ | SHIFTING ROD | | | | ♦ | | ♦ | |
| 36 | | 960 267 7017 | | 1 | AĞIR SERİ HİLAL MİLİ | SHIFTING ROD | | | | | | | ♦ |
| 37 | K21.06499 | 930 267 0618 | | 1 | AĞIR SERİ HİLAL MİL PİSTONU | PISTON | | | ♦ | ♦ | ♦ | ♦ | ♦ |
| 38 | K21.03525 | 024 997 8347 | (020 997 6747) | 1 | AĞIR SERİ SİLİNDİR KEÇESİ | SEAL RING | 77X90X17mm | | ♦ | ♦ | ♦ | ♦ | ♦ |
| | | | (014 997 3647) | | | | | | | | | | |

NOTES :
Parts coded with alphabetic letters are used together.

GEARBOX TYPE:
715380 - 715382 - G330/12 KLAUEN OLD
715381 - 715384 - 715388 G330/12 KLAUEN NEW

NOTLAR :
Alfabetik harf ile kodlanan parçalar birlikte kullanılır.

ŞANZIMAN TİPLERİ:
715380 - 715382 - G330/12 KLAUEN OLD
715381 - 715384 - 715388 G330/12 KLAUEN NEW





Original parts names, oem numbers, symbols and descriptions used in this catalogue are for reference purposes only.

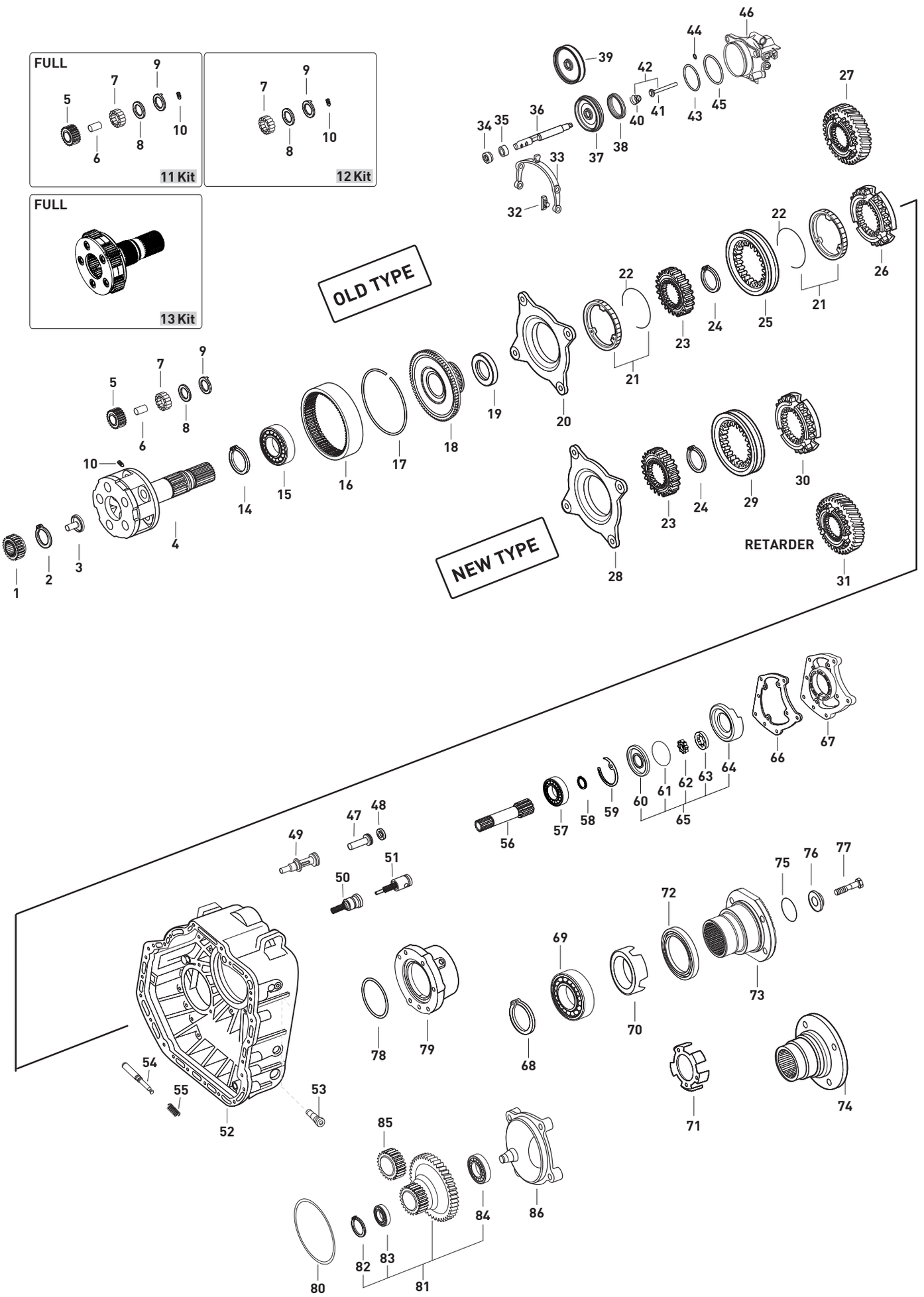






Original parts names, oem numbers, symbols and descriptions used in this catalogue are for reference purposes only.

| Fig. | Kacmaz No | Oem No | Oem Old No | Pcs. | Ürün Tanımı | Description | Sizes | Not | 715380 | 715381 | 715382 | 715384 | 715388 |
|---|---|---|---|---|---|---|---|---|---|---|---|---|---|
| 39 | K21.06497 | 960 267 0118 | | 1 | AĞIR SERİ HİLAL MİL PİSTONU | PISTON | tire sticked | | ♦ | ♦ | ♦ | ♦ | ♦ |
| 40 | K21.04255 | 008 993 0801 | (000 993 6705) | 1 | OKUYUCU MİL YAYI | SPRING | 9,7x7,7x8,1mm | | ♦ | ♦ | ♦ | ♦ | ♦ |
| 41 | K21.04257 | 000 543 5785 | | 1 | OKUYUCU MİLİ | MAGNETIC PISTON | | | ♦ | ♦ | ♦ | ♦ | ♦ |
| 42 | K21.07049 | 960 543 0285 | | Kit | OKUYUCU MİL-YAY TAKIMI | REPAIR KIT | | | ♦ | ♦ | ♦ | ♦ | ♦ |
| 43 | K21.06399 | 013 997 7548 | | 1 | AĞIR SERİ SİLİNDİR ORİNGİ | O-RING | 89,5X3mm | | ♦ | ♦ | ♦ | ♦ | ♦ |
| 44 | K21.06636 | 015 997 4048 | (020 997 8748) | 1 | AĞIR SERİ SİLİNDİR ORİNGİ | O-RING | 5X3mm | | ♦ | ♦ | ♦ | ♦ | ♦ |
| 45 | K21.06968 | 017 997 6545 | | 1 | AĞIR SERİ SİLİNDİR ORİNGİ | O-RING | 96X1,5mm | | ♦ | ♦ | ♦ | ♦ | ♦ |
| 46 | | 002 260 9563 | | 1 | AĞIR SERİ SİLİNDİRİ | SHIFT CYLINDER | | | ♦ | | ♦ | | ♦ |
| 46 | | 003 260 5663 | (003 260 3963) | 1 | AĞIR SERİ SİLİNDİRİ | SHIFT CYLINDER | | | | ♦ | | ♦ | |
| | | | (003 260 4063) | | | | | | | | | | |
| 47 | K21.06979 | 389 265 0176 | (389 265 0076) | 1 | YAĞ BASINÇ VALFİ ALIN FİBERİ | WASHER | | | ♦ | | ♦ | | ♦ |
| 48 | K21.04212 | 013 997 0048 | (020 997 8248) | 1 | YAĞ BASINÇ VALF ORİNGİ | O-RING | 19,2X3mm | | ♦ | | ♦ | | ♦ |
| 49 | | 960 260 3257 | (960 260 1157) | 1 | YAĞ BASINÇ VALFİ ALIN FİBERİ | WASHER | | | ♦ | ♦ | | | ♦ |
| 50 | K21.06953 | 960 260 1057 | | Kit | YAĞ BASINÇ VALFİ KOMPLE | VALVE KIT | | | ♦ | ♦ | ♦ | ♦ | ♦ |
| 50 | K21.06988 | 960 260 2257 | | Kit | YAĞ BASINÇ VALFİ KOMPLE | VALVE KIT | | | ♦ | ♦ | ♦ | | ♦ |
| 51 | K21.06973 | 960 260 1257 | | Kit | YAĞ BASINÇ VALFİ KOMPLE | VALVE KIT | | | ♦ | ♦ | ♦ | | |
| 51 | K21.06989 | 960 260 2157 | (960 260 3757) | Kit | YAĞ BASINÇ VALFİ KOMPLE | VALVE KIT | | | | ♦ | | | |
| 52 | | 930 260 5911 | (930 260 2311) | 1 | ŞANZIMAN ARKA GÖVDE | HOUSING | | | ♦ | | ♦ | | ♦ |
| | | | (930 261 1303) | | | | | | | | | | |
| 52 | | 930 260 6011 | (930 260 1511) | 1 | ŞANZIMAN ARKA GÖVDE | HOUSING | | | ♦ | | | | |
| | | | (930 260 2411) | | | | | | | | | | |
| 52 | | 960 260 2112 | | 1 | ŞANZIMAN ARKA GÖVDE | HOUSING | | | | ♦ | | | |
| 52 | | 960 260 5423 | (960 260 4923) | 1 | ŞANZIMAN ARKA GÖVDE | HOUSING | | | | ♦ | | | |
| 52 | K21.07000 | 960 260 5912 | (960 260 0112) | 1 | ŞANZIMAN ARKA GÖVDE | HOUSING | | | | ♦ | | ♦ | ♦ |
| 53 | K21.04307 | 960 265 0774 | (945 265 1274) | 2 | HİLAL CİVATASI | PIN | | | ♦ | ♦ | ♦ | ♦ | ♦ |
| | | | (945 265 2974) | | | | | | | | | | |
| | | | (945 265 2774) | | | | | | | | | | |
| 54 | K21.06004 | 945 267 0274 | (389 267 0274) | 1 | AĞIR SERİ KİLİTLEME MİLİ | PIN | | | ♦ | ♦ | ♦ | ♦ | ♦ |
| 55 | K21.06006 | 389 993 3401 | (389 993 0601) | 1 | AĞIR SERİ KİLİTLEME YAYI | SPRING | | | ♦ | ♦ | ♦ | ♦ | ♦ |
| 56 | K21.03198 | 947 269 1010 | (945 269 1010) | 1 | YAĞ POMPA MİLİ | OIL PUMP SHAFT | | | ♦ | | ♦ | | |
| 56 | K21.06298 | 947 269 1110 | (945 269 1110) | 1 | YAĞ POMPA MİLİ | OIL PUMP SHAFT | | | ♦ | | ♦ | | |
| 56 | | 960 269 0010 | | 1 | YAĞ POMPA MİLİ | OIL PUMP SHAFT | | | | ♦ | | ♦ | ♦ |
| 56 | | 960 269 0110 | | 1 | YAĞ POMPA MİLİ | OIL PUMP SHAFT | | | | ♦ | | | ♦ |
| 57 | K21.03648 | 010 981 9025 | (010 981 8425) | 1 | PTO MİL BİLYASI | ROLLLER BEARING | 17X35X10mm | | ♦ | ♦ | ♦ | ♦ | ♦ |
| | | | (008 981 5425) | | | | | | | | | | |
| | | | (008 981 3425) | | | | | | | | | | |
| 58 | | 912009 045100 | | 1 | PTO MİL BİLYA SEKMANI | RETAINING RING | | | ♦ | ♦ | ♦ | ♦ | ♦ |
| 59 | K21.94304 | | | 1 | YAĞ POMPA PULU | SPACER WASHER | 0,70mm | | ♦ | ♦ | ♦ | ♦ | ♦ |
| 59 | K21.04304 | 389 262 6254 | | 1 | YAĞ POMPA PULU | SPACER WASHER | 0,80mm | | ♦ | ♦ | ♦ | ♦ | ♦ |
| 59 | K21.04303 | 389 262 5954 | | 1 | YAĞ POMPA PULU | SPACER WASHER | 0,90mm | | ♦ | ♦ | ♦ | ♦ | ♦ |
| 59 | K21.04302 | 389 262 5754 | | 1 | YAĞ POMPA PULU | SPACER WASHER | 1,00mm | | ♦ | ♦ | ♦ | ♦ | ♦ |
| 59 | K21.04301 | 389 262 5554 | | 1 | YAĞ POMPA PULU | SPACER WASHER | 1,10mm | | ♦ | ♦ | ♦ | ♦ | ♦ |
| 59 | K21.04305 | 389 262 5354 | | 1 | YAĞ POMPA PULU | SPACER WASHER | 1,20mm | | ♦ | ♦ | ♦ | ♦ | ♦ |
| 60 | K21.03412 | 945 269 0201 | (389 269 2501) | 1 | YAĞ POMPA KAPAĞI | OIL PUMP COVER | | | ♦ | ♦ | ♦ | ♦ | ♦ |
| 61 | K21.03511 | 029 997 5748 | | 1 | YAĞ POMPA ORİNGİ | O-RING | 112X2,5mm | | ♦ | ♦ | ♦ | ♦ | ♦ |
| 62 | K21.03413 | 389 269 1406 | (389 269 1506) | 1 | YAĞ POMPA İÇ ROTOR | OIL PUMP GEAR | | | ♦ | ♦ | ♦ | ♦ | ♦ |
| | | | (945 260 0090) | | | | | | | | | | |
| 63 | K21.03414 | 389 269 0706 | (389 269 1206) | 1 | YAĞ POMPA DIŞ ROTOR | ROTOR | | | ♦ | ♦ | ♦ | ♦ | ♦ |
| 64 | K21.03478 | 947 269 1001 | | 1 | YAĞ POMPA GÖVDESİ | OIL PUMP HOUSING | | | ♦ | ♦ | ♦ | ♦ | ♦ |
| 65 | K21.03475 | 389 260 0790 | | 1 | YAĞ POMPASI | OIL PUMP | | | ♦ | ♦ | ♦ | ♦ | ♦ |
| 66 | K21.03667 | 945 261 0680 | (945 261 0580) | 1 | PTO KAPAK CONTASI | GASKET | | | ♦ | ♦ | ♦ | ♦ | ♦ |
| | | | (945 261 0080) | | | | | | | | | | |
| 67 | K21.03566 | 945 261 1033 | (945 261 1433) | 1 | PTO KAPAĞI | COVER | | | ♦ | ♦ | ♦ | ♦ | ♦ |
| | | | (400 261 1133) | | | | | | | | | | |
| 68 | K21.06865 | 000472 150000 | | 1 | ŞANZIMAN HEYKEL BİLYA SEKMANI | RETAINING RING | | | | ♦ | | ♦ | ♦ |

NOTES :
Parts coded with alphabetic letters are used together.

GEARBOX TYPE:
715380 - 715382 - G330/12 KLAUEN OLD
715381 - 715384 - 715388 G330/12 KLAUEN NEW

NOTLAR :
Alfabetik harf ile kodlanan parçalar birlikte kullanılır.

ŞANZIMAN TİPLERİ:
715380 - 715382 - G330/12 KLAUEN OLD
715381 - 715384 - 715388 G330/12 KLAUEN NEW





Original parts names, oem numbers, symbols and descriptions used in this catalogue are for reference purposes only.

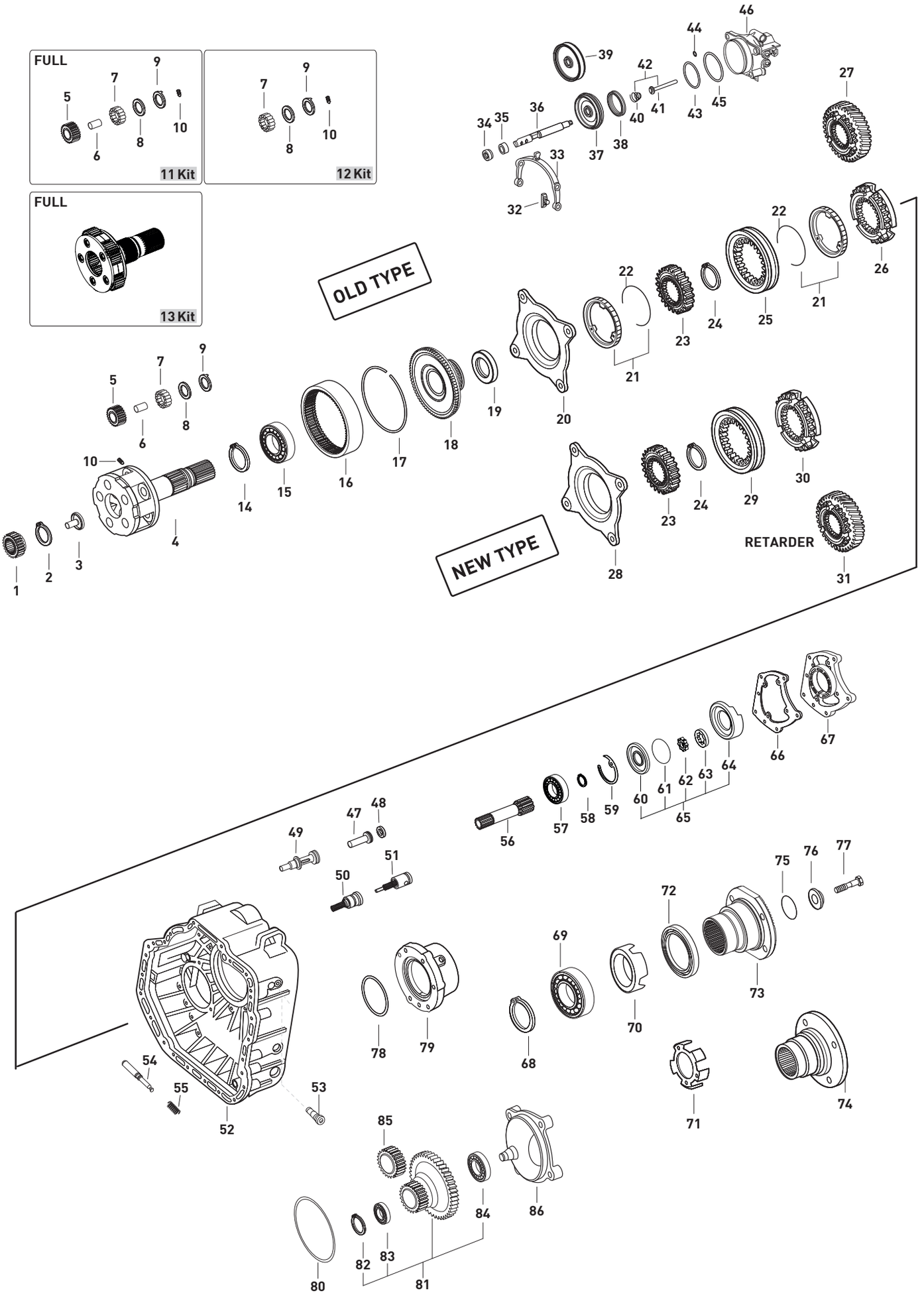






Original parts names, oem numbers, symbols and descriptions used in this catalogue are for reference purposes only.

| Fig. | Kacmaz No | Oem No | Oem Old No | Pcs. | Ürün Tanımı | Description | Sizes | Not | 715380 | 715381 | 715382 | 715384 | 715388 |
|---|---|---|---|---|---|---|---|---|---|---|---|---|---|
| 69 | K21.03625 | 008 981 3025 | (008 981 5225) | 1 | ŞANZIMAN ARKA BİLYA | ROLLER BEARING | 80X150X28mm | | ♦ | ♦ | ♦ | ♦ | ♦ |
| | | | (007 981 3325) | | | | | | | | | | |
| 70 | K21.06947 | 930 262 1428 | (930 262 0128) | 1 | ŞANZIMAN KM DEVİR SACI | PULSE STAR | | | ♦ | ♦ | ♦ | ♦ | ♦ |
| 71 | K21.04144 | 387 262 0928 | | 1 | ŞANZIMAN KM DEVİR SACI | PULSE STAR | | | | ♦ | | | |
| 72 | K21.03512 | 015 997 7846 | (023 997 1647) | 1 | ŞANZIMAN ARKA KEÇE | OIL SEAL | 95X115X15,5mm | | ♦ | ♦ | ♦ | ♦ | ♦ |
| 73 | K21.03211 | 930 262 0045 | | 1 | ŞANZIMAN FLANŞI | COMPANION FLANGE | 4-H, Ø180mm | | ♦ | | | | ♦ |
| 73 | K21.03195 | 930 262 0145 | | 1 | ŞANZIMAN FLANŞI | COMPANION FLANGE | Ø200mm | | ♦ | | ♦ | | ♦ |
| 73 | K21.06052 | 945 262 0245 | | 1 | ŞANZIMAN FLANŞI | COMPANION FLANGE | 4-H, Ø200mm | | ♦ | ♦ | ♦ | | ♦ |
| 74 | | 945 262 7445 | | 1 | ŞANZIMAN FLANŞI | COMPANION FLANGE | | | | | | ♦ | |
| 74 | | 960 262 0045 | | 1 | ŞANZIMAN FLANŞI | COMPANION FLANGE | Ø180mm | | | ♦ | | | |
| 74 | K21.03196 | 945 262 0045 | | 1 | ŞANZIMAN FLANŞI | COMPANION FLANGE | 4-H, Ø180mm | | ♦ | | | | ♦ |
| 74 | | 947 262 0345 | (976 262 0345) | 1 | ŞANZIMAN FLANŞI | COMPANION FLANGE | Ø150mm | | | ♦ | | | |
| 74 | | 387 264 3445 | | 1 | ŞANZIMAN FLANŞI | COMPANION FLANGE | Ø180mm | | | ♦ | | | |
| 75 | K21.04310 | 014 997 5148 | (020 997 8648) | 1 | ŞANZIMAN FLANŞ ORİNGİ | O-RING | 72,4X5,3mm | | ♦ | | ♦ | | |
| 75 | | 025 997 5345 | | 1 | ŞANZIMAN FLANŞ ORİNGİ | O-RING | 70,8x5,1mm | | ♦ | ♦ | ♦ | ♦ | ♦ |
| 76 | K21.04214 | 945 262 0762 | | 1 | ŞANZIMAN FLANŞI ALIN PULU | THRUST WASHER | 93X20mm | | ♦ | ♦ | ♦ | ♦ | ♦ |
| 77 | K21.06280 | 000000 006750 | (000000 005728) | 1 | ŞANZ.FLANŞI ALIN VİDASI | SCREW | M20X1,5X80mm | | ♦ | ♦ | ♦ | ♦ | ♦ |
| 78 | K21.06713 | 015 997 2848 | (020 997 8548) | 1 | ŞANZIMAN ARKA KAPAK ORİNGİ | O-RING | 149,5X3mm | | ♦ | | ♦ | | ♦ |
| 79 | K21.06238 | 389 261 1920 | (389 261 2020) | 1 | ŞANZIMAN ARKA KAPAK | COVER | | | ♦ | | ♦ | | ♦ |
| 79 | K21.06239 | 930 261 0420 | (930 261 0520) | 1 | ŞANZIMAN ARKA KAPAK | COVER | | RETARDER | ♦ | | ♦ | | ♦ |
| | | | (389 261 1820) | | | | | | | | | | |
| 80 | | 017 997 9145 | (028 997 8148) | 1 | ŞANZIMAN ARKA KAPAK ORİNGİ | O-RING | 198X3mm | | ♦ | | | | ♦ |
| 81 | K21.06311 | 930 264 0921 | | 1 | DİREKSİYON POMPA DİŞLİSİ | GEAR | | | ♦ | | | | ♦ |
| 82 | | 000983 020000 | | 1 | DİREK.POMPA DİŞLİ BİLYA SEKMANI | RETAINING RING | | | ♦ | | | | ♦ |
| 83 | | 000625 006004 | | 1 | DİREKSİYON POMPA DİŞLİ ÖN BİLYA | ROLLER BEARING | | | ♦ | | | | ♦ |
| 84 | | 000625 506007 | | 1 | DİREKSİYON POMPA DİŞLİ ARKA BİLYA | ROLLER BEARING | | | ♦ | | | | ♦ |
| 85 | K21.03671 | 930 264 0721 | | 1 | DİREKSİYON POMPA DİŞLİ KARŞILIĞI | GEAR | | | ♦ | | | | ♦ |
| 86 | K21.06300 | 930 264 0111 | (930 264 0211) | 1 | DİREKSİYON POMPA KAPAĞI | HOUSING | | | ♦ | | | | ♦ |

NOTES :
Parts coded with alphabetic letters are used together.

GEARBOX TYPE:
715380 - 715382 - G330/12 KLAUEN OLD
715381 - 715384 - 715388 G330/12 KLAUEN NEW

NOTLAR :
Alfabetik harf ile kodlanan parçalar birlikte kullanılır.

ŞANZIMAN TİPLERİ:
715380 - 715382 - G330/12 KLAUEN OLD
715381 - 715384 - 715388 G330/12 KLAUEN NEW





Original parts names, oem numbers, symbols and descriptions used in this catalogue are for reference purposes only.

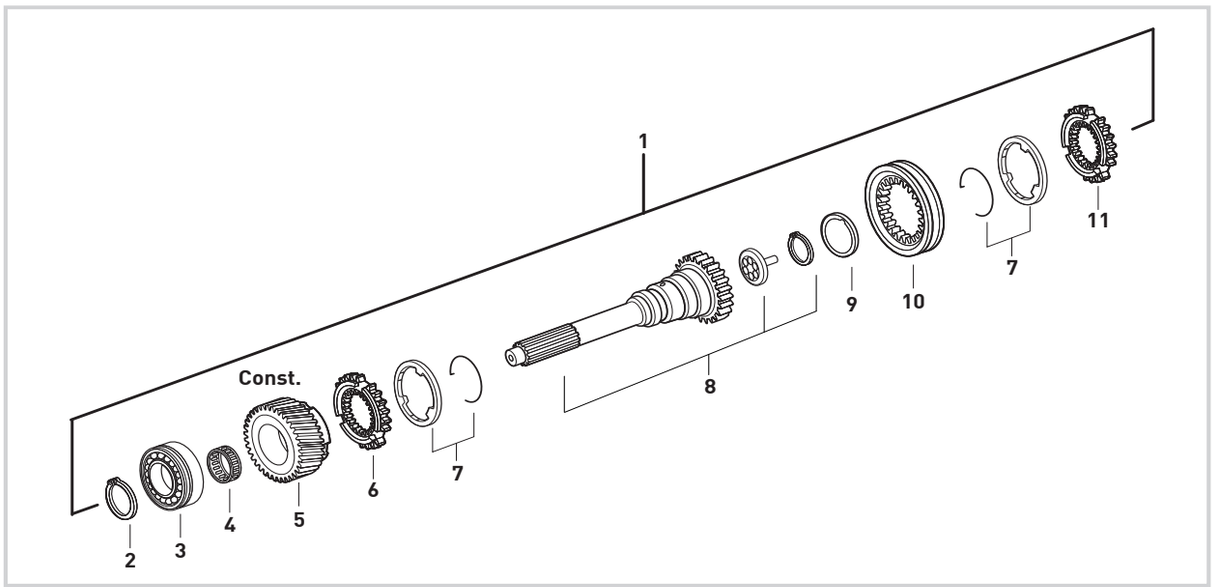


| Fig. | Kacmaz No. | Oem No | Oem Old No | Pcs. | Ürün Tanımı | Description | Sizes |
|---|---|---|---|---|---|---|---|
| 1 | K21.03577 | | | Kit | PRİZDİREK KOMPLE | INPUT SHAFT COMPLETE | |
| 2 | K21.04346 | 387 262 8773 | | 1 | PRİZDİREK ÖN BİLYA SEKMANI | RETAINING RING | 3,20mm |
| 3 | K21.03618 | 011 981 1305 | (014 981 9005) | 1 | PRİZDİREK ÖN BİLYA | ROLLER BEARING | 75X140X34,25mm |
| 4 | K21.03855 | 022 981 7910 | (022 981 5310) | 1 | TAKVİYE MASURA BİLYA | NEEDLE CAGE | 84X90X55mm |
| 5 | K21.03578 | 960 262 0717 | (930 262 1717) | 1 | TAKVİYE DİŞLİSİ 40 DİŞ | CONSTANT GEAR 40 T. | |
| 6 | K21.03146 | 945 262 8234 | (945 262 5434) | 1 | TAKVİYE SENKROMENÇ | ENGAGING RING | |
| 7 | K21.06299 | 947 260 3545 | (947 260 5145) | 2 | TAKVİYE SENK. FRENLEME (C) | SYNCHRONIZING CONE / C | |
| 8 | K21.03575 | 960 262 5802 | (930 262 0403) | 1 | PRİZDİREK 66 DİŞ | INPUT SHAFT 66 T. | |
| 9 | K21.03513 | 001 262 0262 | (000 262 8662) | 1 | PRİZDİREK ARKA KEÇE | OIL SEAL | 73,5X101X7mm |
| 10 | K21.03151 | 945 262 6523 | (930 262 0523) | 1 | TAKVİYE HALKA | ENGAGING SLEEVE | |
| 11 | K21.03576 | 930 262 0234 | (930 262 0034) | 1 | TAKVİYE SENKROMENÇ | ENGAGING RING | |



**Original parts names, oem numbers, symbols and descriptions used in this catalogue are for reference purposes only.**

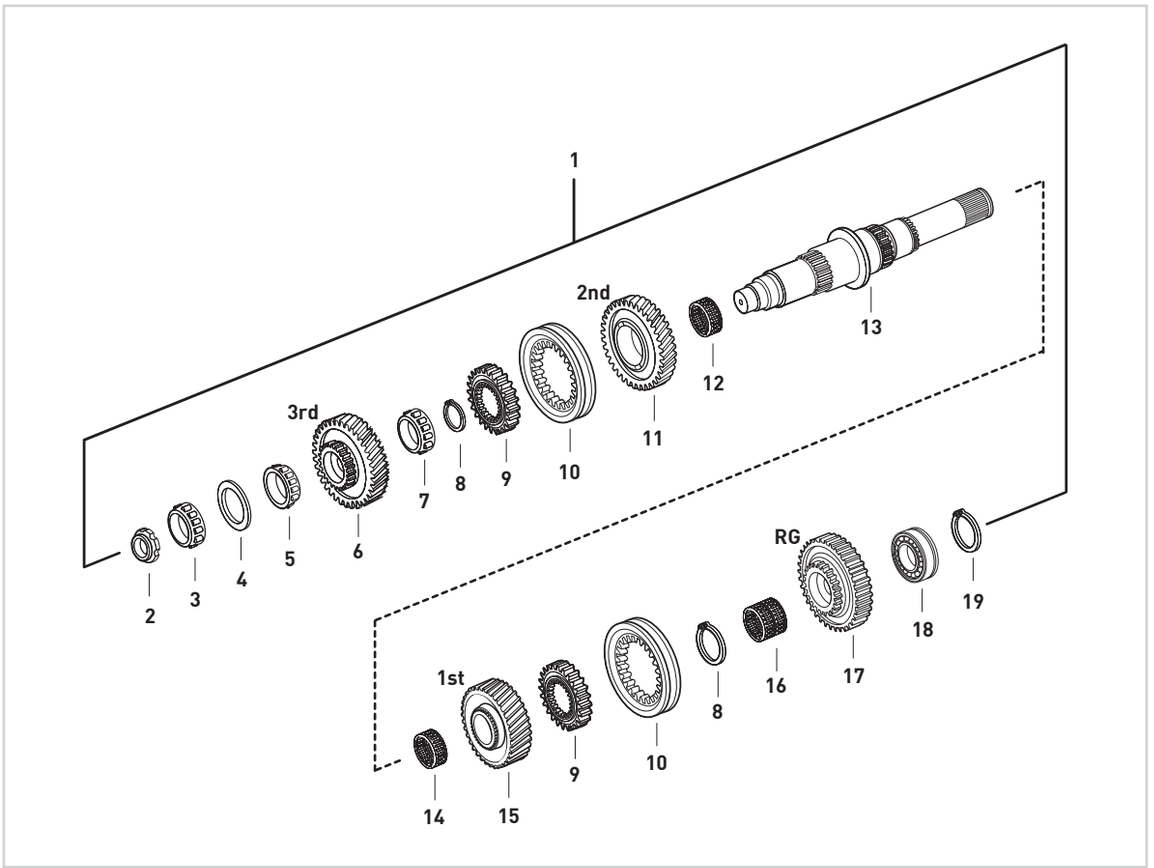


| Fig. | Kacmaz No. | Oem No | Oem Old No | Pcs. | Ürün Tanımı | Description | Sizes |
|---|---|---|---|---|---|---|---|
| 1 | K21.06671 | | | Kit | KAMALI MİL KOMPLE | MAIN SHAFT COMPLETE | |
| 2 | K21.03432 | 945 990 0250 | (945 990 0150) | 1 | KAMALI MİL SOMUNU | NUT | M30X1,5 |
| 3 | K21.03632 | 020 981 5205 | (017 981 1305) | 1 | KAMALI MİL UÇ BİLYA | ROLLER BEARING | 39,69X40,39mm |
| 4 | K21.04025 | 389 262 3252 | | 1 | KAMALI MİL AYAR PULU | THRUST WASHER | 2,00mm |
| 5 | K21.03620 | 017 981 5105 | (015 981 6105) | 1 | 3.VİTES DİŞLİ ÖN BİLYA | ROLLER BEARING | 50X41,3mm |
| 6 | K21.03580 | 960 262 1017 | (930 262 3617) | 1 | 3.VİTES DİŞLİSİ 31 DİŞ | GEAR 3rd 31 T. | |
| 7 | K21.03664 | 017 981 7105 | | 1 | 3.VİTES DİŞLİ ARKA BİLYA | ROLLER BEARING | 55X29,8mm |
| 8 | K21.04344 | 387 262 7973 | | 2 | 2./3 VİTES YILDIZ DİŞLİ SEG. | RETAINING RING | 2,70mm |
| 9 | K21.03581 | 960 262 3135 | (945 262 3635) | 2 | 1./2./3./GERİ VİTES YILDIZ DİŞLİ | SYNCHRONIZER HUB | |
| 10 | K21.03582 | 960 262 1523 | (930 262 0123) | 2 | 1./2./3./GERİ VİTES HALKA | ENGAGING SLEEVE | |
| 11 | K21.03583 | 930 262 0112 | (930 262 0612) | 1 | 2.VİTES DİŞLİSİ 38 DİŞ | GEAR 2nd 38 T. | |
| 12 | K21.03859 | 023 981 5210 | (022 981 5810) | 1 | 2.VİTES MASURA BİLYA | NEEDLE CAGE | 85X93X60mm |
| 13 | K21.03584 | 930 262 0805 | (930 262 2205) | 1 | KAMALI MİL | MAIN SHAFT | |
| 14 | K21.06369 | 024 981 2410 | (022 981 5910) | 1 | 1.VİTES MASURA BİLYA | NEEDLE CAGE | 85X93X73mm |
| 15 | K21.03586 | 930 262 0511 | (930 262 0811) | 1 | 1.VİTES DİŞLİSİ 41 DİŞ | GEAR 1st 41 T. | |
| 16 | K21.03858 | 022 981 6010 | (022 981 5610) | 1 | GERİ VİTES MASURA BİLYA | NEEDLE CAGE | 75X83X48mm |
| 17 | K21.03587 | 930 262 0133 | (948 262 0233) | 1 | GERİ VİTES DİŞLİSİ 45 DİŞ | REVERSE GEAR 45 T. | |
| 18 | K21.03661 | 002 981 8181 | | 1 | KAMALI MİL ARKA BİLYA | ROLLER BEARING | 60X130X35,2mm |
| 19 | K21.04331 | 007 994 1841 | (006 994 9941) | 1 | KAMALI MİL ARKA BİLYA SEKMANI | RETAINING RING | 2,50mm |



Original parts names, oem numbers, symbols and descriptions used in this catalogue are for reference purposes only.

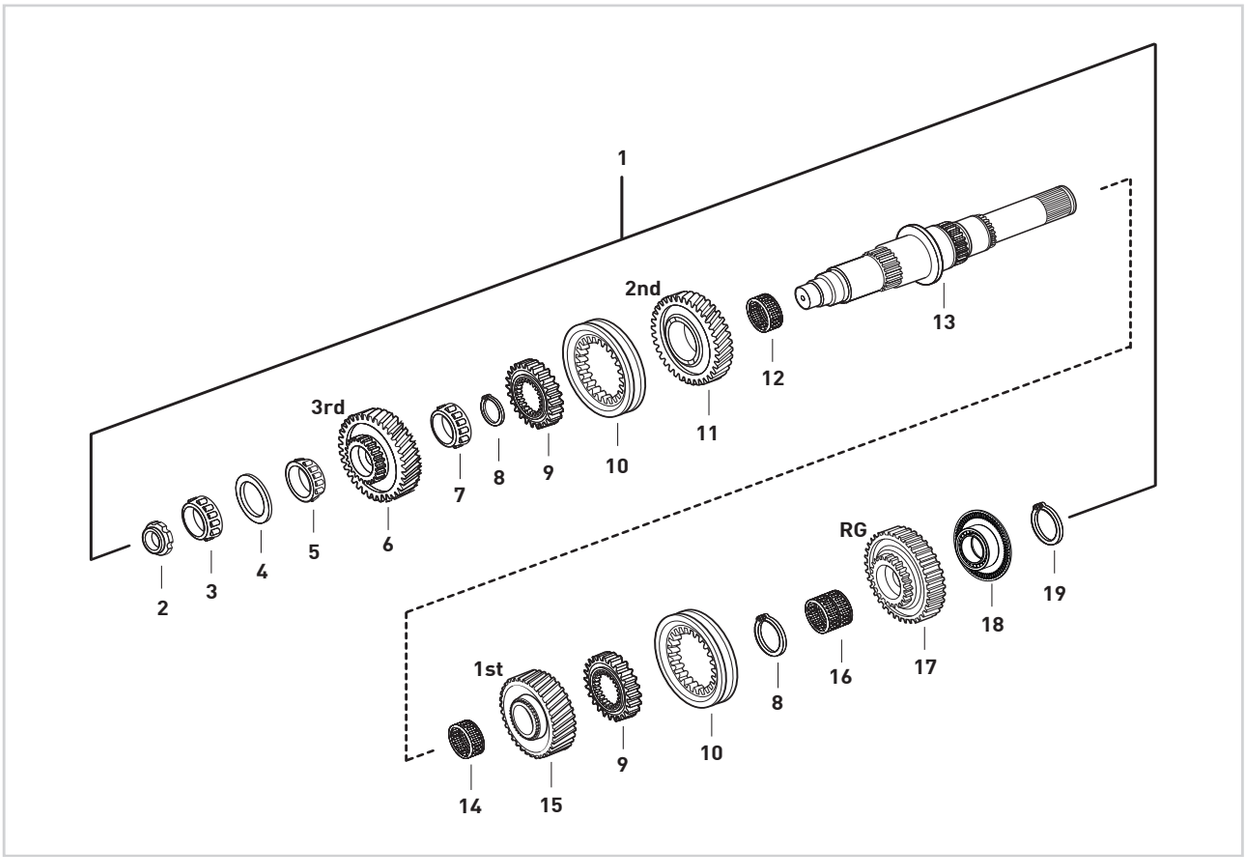


| Fig. | Kacmaz No. | Oem No | Oem Old No | Pcs. | Ürün Tanımı | Description | Sizes |
|---|---|---|---|---|---|---|---|
| 1 | K21.06368 | | | Kit | KAMALI MİL KOMPLE | MAIN SHAFT COMPLETE | |
| 2 | K21.03432 | 945 990 0250 | (945 990 0150) | 1 | KAMALI MİL SOMUNU | NUT | M30X1,5 |
| 3 | K21.03632 | 020 981 5205 | (017 981 1305) | 1 | KAMALI MİL UÇ BİLYA | ROLLER BEARING | 39,69X40,39mm |
| 4 | K21.04093 | 389 262 2355 | | 1 | KAMALI MİL AYAR PULU | THRUST WASHER | 1,79mm |
| 5 | K21.03620 | 017 981 5105 | (015 981 6105) | 1 | 3.VİTES DİŞLİ ÖN BİLYA | ROLLER BEARING | 50X41,3mm |
| 6 | K21.03580 | 960 262 1017 | (930 262 3617) | 1 | 3.VİTES DİŞLİSİ 31 DİŞ | GEAR 3rd 31 T. | |
| 7 | K21.03664 | 017 981 7105 | | 1 | 3.VİTES DİŞLİ ARKA BİLYA | ROLLER BEARING | 55X29,8mm |
| 8 | K21.04344 | 387 262 7973 | | 2 | 2./3 VİTES YILDIZ DİŞLİ SEG. | RETAINING RING | 2,70mm |
| 9 | K21.03581 | 960 262 3135 | (945 262 3635) | 2 | 1./2./3./GERİ VİTES YILDIZ DİŞLİ | SYNCHRONIZER HUB | |
| 10 | K21.03582 | 960 262 1523 | (930 262 0123) | 2 | 1./2./3./GERİ VİTES HALKA | ENGAGING SLEEVE | |
| 11 | K21.03583 | 930 262 0112 | (930 262 0612) | 1 | 2.VİTES DİŞLİSİ 38 DİŞ | GEAR 2nd 38 T. | |
| 12 | K21.03859 | 023 981 5210 | (022 981 5810) | 1 | 2.VİTES MASURA BİLYA | NEEDLE CAGE | 85X93X60mm |
| 13 | K21.03584 | 930 262 0805 | (930 262 2205) | 1 | KAMALI MİL | MAIN SHAFT | |
| 14 | K21.06369 | 024 981 2410 | (022 981 5910) | 1 | 1.VİTES MASURA BİLYA | NEEDLE CAGE | 85X93X73mm |
| 15 | K21.03586 | 930 262 0511 | (930 262 0811) | 1 | 1.VİTES DİŞLİSİ 41 DİŞ | GEAR 1st 41 T. | |
| 16 | K21.03858 | 022 981 6010 | (022 981 5610) | 1 | GERİ VİTES MASURA BİLYA | NEEDLE CAGE | 75X83X48mm |
| 17 | K21.03587 | 930 262 0133 | (948 262 0233) | 1 | GERİ VİTES DİŞLİSİ 45 DİŞ | REVERSE GEAR 45 T. | |
| 18 | K21.03666 | 018 981 6805 | | 1 | KAMALI MİL ARKA BİLYA | ROLLER BEARING | 60X130X51mm |
| 19 | K21.04331 | 007 994 1841 | (006 994 9941) | 1 | KAMALI MİL ARKA BİLYA SEKMANI | RETAINING RING | 2,50mm |



**Original parts names, oem numbers, symbols and descriptions used in this catalogue are for reference purposes only.**

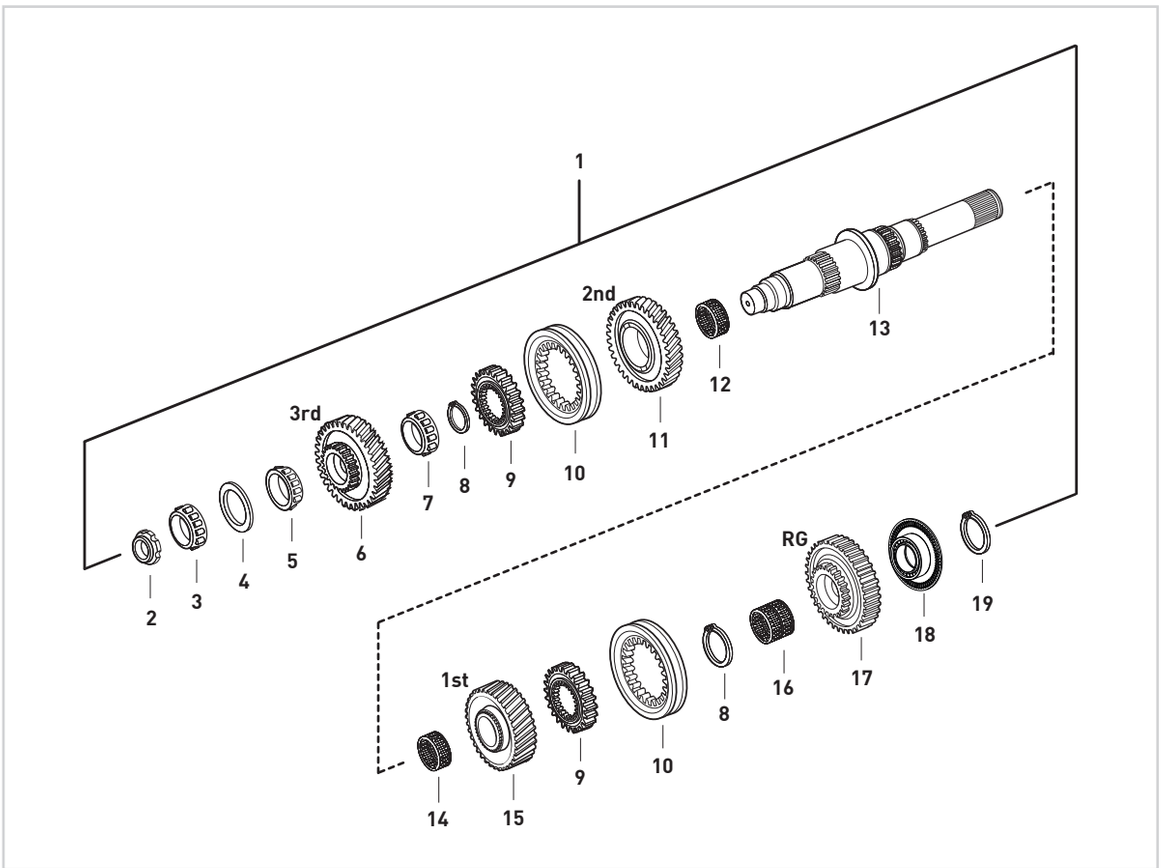


| Fig. | Kacmaz No. | Oem No | Oem Old No | Pcs. | Ürün Tanımı | Description | Sizes |
|---|---|---|---|---|---|---|---|
| 1 | K21.06674 | | | Kit | KAMALI MİL KOMPLE | MAIN SHAFT COMPLETE | |
| 2 | K21.03432 | 945 990 0250 | (945 990 0150) | 1 | KAMALI MİL SOMUNU | NUT | M30X1,5 |
| 3 | K21.03632 | 020 981 5205 | (017 981 1305) | 1 | KAMALI MİL UÇ BİLYA | ROLLER BEARING | 39,69X40,39mm |
| 4 | K21.04025 | 389 262 3252 | | 1 | KAMALI MİL AYAR PULU | THRUST WASHER | 2,00mm |
| 5 | K21.03620 | 017 981 5105 | (015 981 6105) | 1 | 3.VİTES DİŞLİ ÖN BİLYA | ROLLER BEARING | 50X41,3mm |
| 6 | K21.03580 | 960 262 1017 | (930 262 3617) | 1 | 3.VİTES DİŞLİSİ 31 DİŞ | GEAR 3rd 31 T. | |
| 7 | K21.03664 | 017 981 7105 | | 1 | 3.VİTES DİŞLİ ARKA BİLYA | ROLLER BEARING | 55X29,8mm |
| 8 | K21.04344 | 387 262 7973 | | 2 | 2./3 VİTES YILDIZ DİŞLİ SEG. | RETAINING RING | 2,70mm |
| 9 | K21.03581 | 960 262 3135 | (945 262 3635) | 2 | 1./2./3./GERİ VİTES YILDIZ DİŞLİ | SYNCHRONIZER HUB | |
| 10 | K21.03582 | 960 262 1523 | (930 262 0123) | 2 | 1./2./3./GERİ VİTES HALKA | ENGAGING SLEEVE | |
| 11 | K21.03583 | 930 262 0112 | (930 262 0612) | 1 | 2.VİTES DİŞLİSİ 38 DİŞ | GEAR 2nd 38 T. | |
| 12 | K21.03859 | 023 981 5210 | (022 981 5810) | 1 | 2.VİTES MASURA BİLYA | NEEDLE CAGE | 85X93X60mm |
| 13 | K21.06980 | 960 262 0105 | (960 262 3805) | 1 | KAMALI MİL | MAIN SHAFT | |
| | | | (948 262 0205) | | | | |
| 14 | K21.06369 | 024 981 2410 | (022 981 5910) | 1 | 1.VİTES MASURA BİLYA | NEEDLE CAGE | 85X93X73mm |
| 15 | K21.03586 | 930 262 0511 | (930 262 0811) | 1 | 1.VİTES DİŞLİSİ 41 DİŞ | GEAR 1st 41 T. | |
| 16 | K21.03858 | 022 981 6010 | (022 981 5610) | 1 | GERİ VİTES MASURA BİLYA | NEEDLE CAGE | 75X83X48mm |
| 17 | K21.03587 | 930 262 0133 | (948 262 0233) | 1 | GERİ VİTES DİŞLİSİ 45 DİŞ | REVERSE GEAR 45 T. | |
| 18 | K21.03861 | 003 980 0202 | | 1 | KAMALI MİL ARKA BİLYA | ROLLER BEARING | 60x130x51mm |
| 19 | K21.04331 | 007 994 1841 | (006 994 9941) | 1 | KAMALI MİL ARKA BİLYA SEKMANI | RETAINING RING | 2,50mm |



Original parts names, oem numbers, symbols and descriptions used in this catalogue are for reference purposes only.

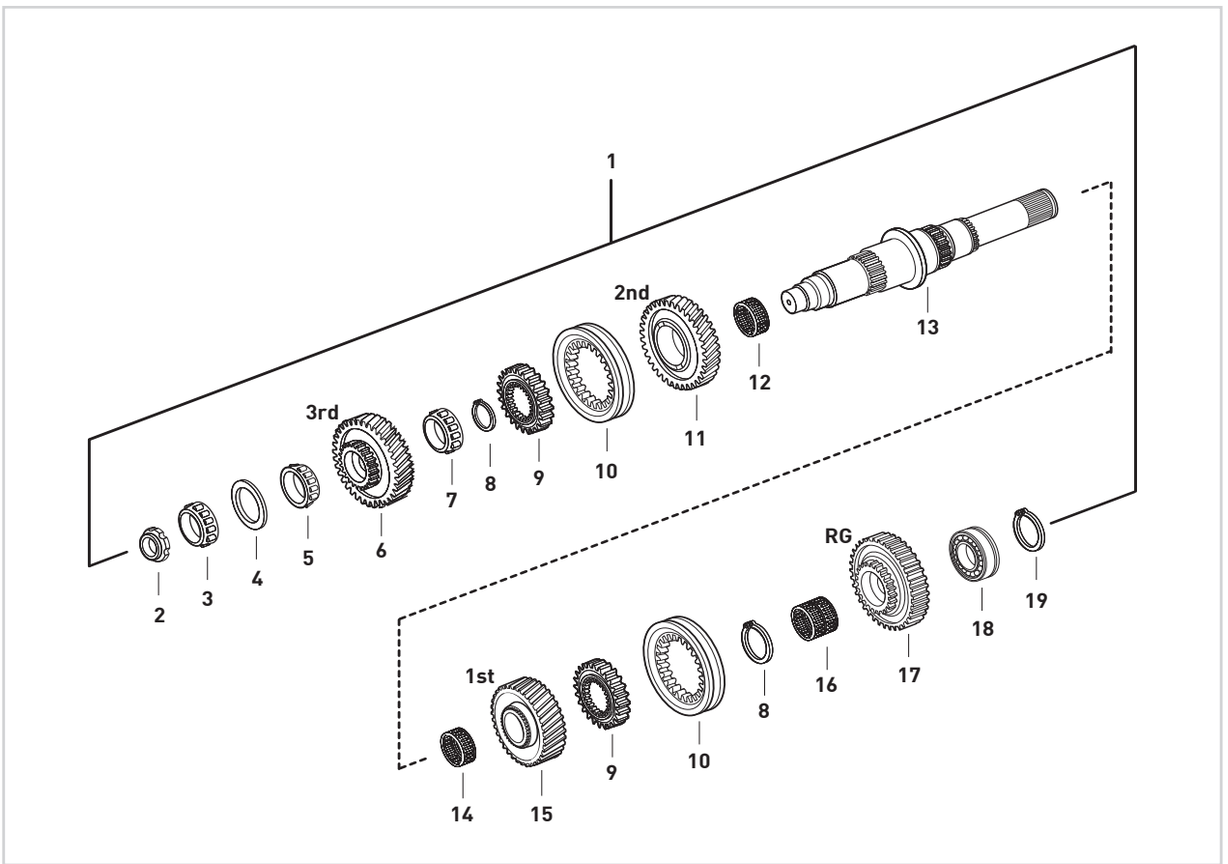


| Fig. | Kacmaz No. | Oem No | Oem Old No | Pcs. | Ürün Tanımı | Description | Sizes |
|---|---|---|---|---|---|---|---|
| 1 | K21.06370 | | | Kit | KAMALI MİL KOMPLE | MAIN SHAFT COMPLETE | |
| 2 | K21.03432 | 945 990 0250 | (945 990 0150) | 1 | KAMALI MİL SOMUNU | NUT | M30X1,5 |
| 3 | K21.03632 | 020 981 5205 | (017 981 1305) | 1 | KAMALI MİL UÇ BİLYA | ROLLER BEARING | 39,69X40,39mm |
| 4 | K21.04025 | 389 262 3252 | | 1 | KAMALI MİL AYAR PULU | THRUST WASHER | 2,00mm |
| 5 | K21.03620 | 017 981 5105 | (015 981 6105) | 1 | 3.VİTES DİŞLİ ÖN BİLYA | ROLLER BEARING | 50X41,3mm |
| 6 | K21.03580 | 960 262 1017 | (930 262 3617) | 1 | 3.VİTES DİŞLİSİ 31 DİŞ | GEAR 3rd 31 T. | |
| 7 | K21.03664 | 017 981 7105 | | 1 | 3.VİTES DİŞLİ ARKA BİLYA | ROLLER BEARING | 55X29,8mm |
| 8 | K21.04344 | 387 262 7973 | | 2 | 2./3 VİTES YILDIZ DİŞLİ SEG. | RETAINING RING | 2,70mm |
| 9 | K21.03581 | 960 262 3135 | (945 262 3635) | 2 | 1./2./3./GERİ VİTES YILDIZ DİŞLİ | SYNCHRONIZER HUB | |
| 10 | K21.03582 | 960 262 1523 | (930 262 0123) | 2 | 1./2./3./GERİ VİTES HALKA | ENGAGING SLEEVE | |
| 11 | K21.03583 | 930 262 0112 | (930 262 0612) | 1 | 2.VİTES DİŞLİSİ 38 DİŞ | GEAR 2nd 38 T. | |
| 12 | K21.03859 | 023 981 5210 | (022 981 5810) | 1 | 2.VİTES MASURA BİLYA | NEEDLE CAGE | 85X93X60mm |
| 13 | K21.06331 | 930 262 0205 | | 1 | KAMALI MİL | MAIN SHAFT | |
| 14 | K21.06369 | 024 981 2410 | (022 981 5910) | 1 | 1.VİTES MASURA BİLYA | NEEDLE CAGE | 85X93X73mm |
| 15 | K21.03586 | 930 262 0511 | (930 262 0811) | 1 | 1.VİTES DİŞLİSİ 41 DİŞ | GEAR 1st 41 T. | |
| 16 | K21.03858 | 022 981 6010 | (022 981 5610) | 1 | GERİ VİTES MASURA BİLYA | NEEDLE CAGE | 75X83X48mm |
| 17 | K21.06330 | 930 262 0033 | | 1 | GERİ VİTES DİŞLİSİ 45 DİŞ | REVERSE GEAR 45 T. | |
| 18 | K21.03623 | 014 981 6105 | (016 981 1305) | 1 | KAMALI MİL ARKA BİLYA | ROLLER BEARING | 60X130X33,2mm |
| 19 | K21.04331 | 007 994 1841 | (006 994 9941) | 1 | KAMALI MİL ARKA BİLYA SEKMANI | RETAINING RING | 2,50mm |



**Original parts names, oem numbers, symbols and descriptions used in this catalogue are for reference purposes only.**

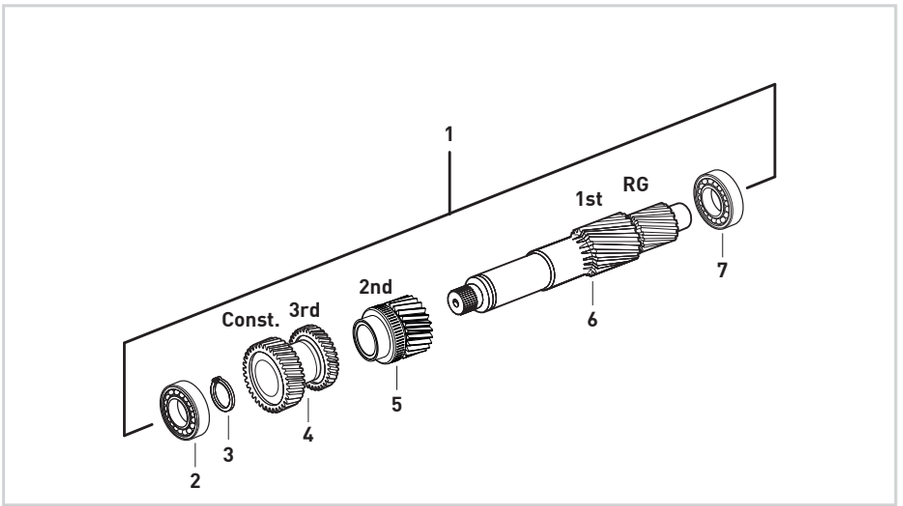


| Fig. | Kacmaz No. | Oem No | Oem Old No | Pcs. | Ürün Tanımı | Description |
|---|---|---|---|---|---|---|
| 1 | K21.03597 | 930 260 2324 | (930 260 1824) | kit | GRUP MİLİ KOMPLE (Devir Sensörlü) | COUNTER SHAFT COMPLETE (With Speed Sensor) |
| | | | (930 260 0124) | | | |
| 2 | K21.03606 | 015 981 9005 | (014 981 1405) | 1 | GRUP MİLİ ÖN BİLYA | ROLLER BEARING 50,8X100X35mm |
| 3 | K21.06425 | 389 994 0041 | | 1 | GRUP MİLİ ÖN BİLYA SEKMANI | RETAINING RING 2,50mm |
| 4 | K21.03600 | 930 263 1910 | | 1 | TAKVİYE VE 3.VİTES DİŞLİ KARŞ.30/30 DİŞ | DOUBLE GEAR Const./3rd 30/30 T. |
| 5 | K21.03599 | 930 263 0812 | | 1 | 2.VİT.DİŞLİ KARŞILIĞI 23 DİŞ (Devir Sensörlü) | GEAR 2nd 23 T (With Speed Sensor) |
| 6 | K21.06341 | 930 263 0402 | | 1 | GRUP MİLİ 15/15/18/16 DİŞ | COUNTER SHAFT 15/15/18/16 T |
| 7 | K21.03624 | 016 981 1205 | (012 981 9405) | 1 | GRUP MİLİ ARKA BİLYA | ROLLER BEARING 60X130X33,8mm |

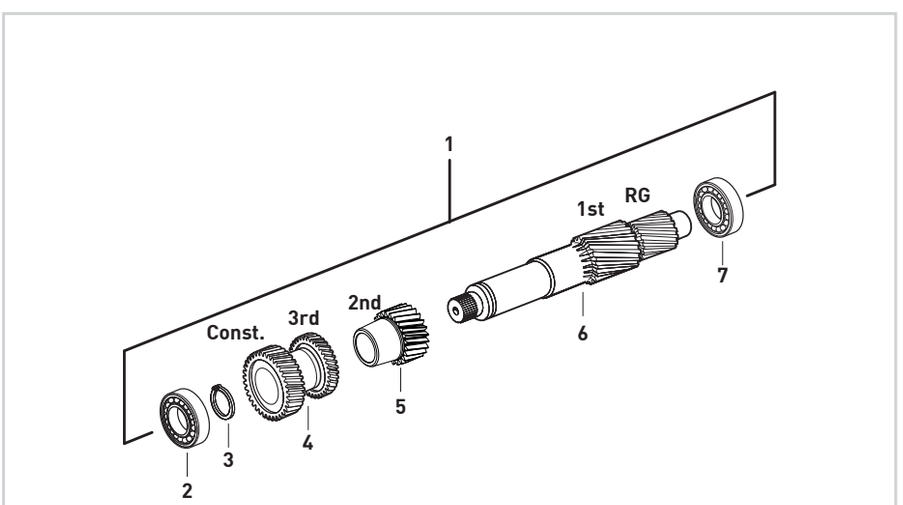


| Fig. | Kacmaz No. | Oem No | Oem Old No | Pcs. | Ürün Tanımı | Description |
|---|---|---|---|---|---|---|
| 1 | K21.06424 | | | Kit | GRUP MİLİ KOMPLE (Devir Sensörsüz) | COUNTER SHAFT COMPLETE (W/Out Speed Sensor) |
| 2 | K21.03606 | 015 981 9005 | (014 981 1405) | 1 | GRUP MİLİ ÖN BİLYA | ROLLER BEARING 50,8X100X35mm |
| 3 | K21.06425 | 389 994 0041 | | 1 | GRUP MİLİ ÖN BİLYA SEKMANI | RETAINING RING 2,50mm |
| 4 | K21.03600 | 930 263 1910 | | 1 | TAKVİYE VE 3.VİTES DİŞLİ KARŞ.30/30 DİŞ | DOUBLE GEAR Const./3rd 30/30 T. |
| 5 | K21.06420 | 930 263 0112 | | 1 | 2.VİT.DİŞLİ KARŞILIĞI 23 DİŞ(Devir Sensörsüz) | GEAR 2nd 23 T (W/Out Speed Sensor) |
| 6 | K21.06341 | 930 263 0402 | | 1 | GRUP MİLİ 15/15/18/16 DİŞ | COUNTER SHAFT 15/15/18/16 T |
| 7 | K21.03624 | 016 981 1205 | (012 981 9405) | 1 | GRUP MİLİ ARKA BİLYA | ROLLER BEARING 60X130X33,8mm |



Original parts names, oem numbers, symbols and descriptions used in this catalogue are for reference purposes only.

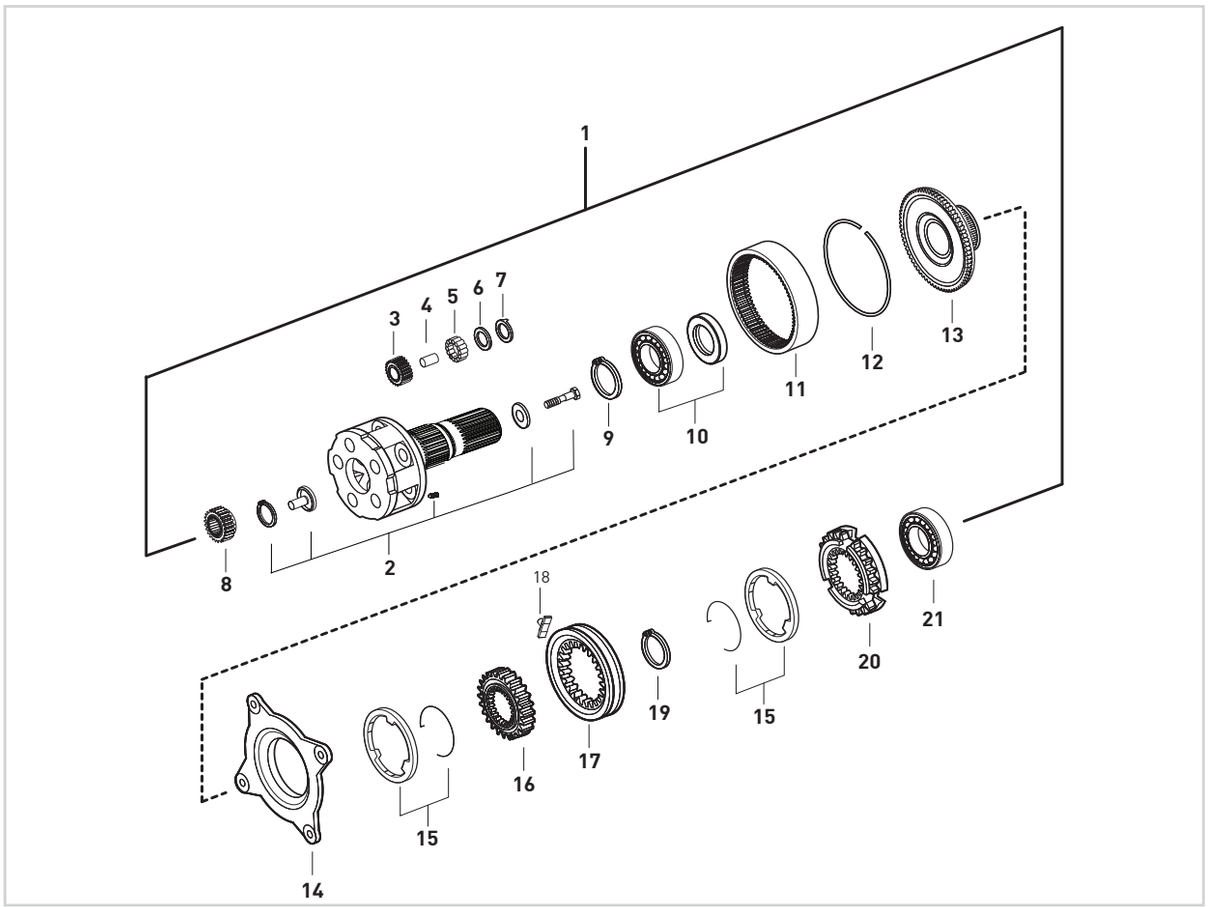


| Fig. | Kacmaz No. | Oem No | Oem Old No | Pcs. | Ürün Tanımı | Description | Sizes |
|---|---|---|---|---|---|---|---|
| 1 | K21.03554 | | | Kit | AĞIR SERİ ARKA AKTARMA KOMPLE | PLANETARY CARRIER COMPLETE | |
| 2 | K21.03180 | 946 260 3561 | (946 260 3661) | 1 | ŞANZIMAN HEYKELİ (BOŞ) | PLANETARY CARRIER (EMPTY) | |
| | | | (945 260 4561) | | | | |
| | | | (945 260 4461) | | | | |
| 3 | K21.03436 | 945 262 0006 | | 5 | HEYKEL KOZA DİŞLİSİ 28 DİŞ | PLANETARY GEAR 28 T. | |
| 4 | K21.03437 | 389 262 0407 | | 5 | HEYKEL KOZA DİŞLİ PİMİ | PLANETARY GEAR PIN | |
| 5 | K21.03816 | 000 981 4186 | (000 981 4386) | 125 | HEYKEL KOZA DİŞLİ TANE BİLYA | NEEDLE ROLLER | D5X39,6 |
| 6 | K21.04074 | 389 262 0162 | (389 262 6462) | 10 | HEYKEL KOZA DİŞLİ PULU | THRUST WASHER | |
| 7 | K21.04075 | 945 262 1162 | (945 262 0162) | 10 | HEYKEL KOZA DİŞLİ PULU | THRUST WASHER | |
| 8 | K21.03169 | 945 262 0909 | (389 262 0809) | 1 | GÜNEŞ DİŞLİ 25 DİŞ | SUN GEAR 25 T. | |
| | | | (389 262 0909) | | | | |
| 9 | K21.06864 | 000472 130000 | | 1 | ÇEMBER DİŞLİ BİLYA SEKMANI | RETAINING RING | 130X4mm |
| 10 | K21.03614 | 008 981 1325 | (004 981 8725) | 1 | ÇEMBER DİŞLİ BİLYASI | ROLLER BEARING | 90X130X14mm |
| 11 | K21.03449 | 945 262 1208 | (945 262 0808) | 1 | ÇEMBER DİŞLİ 85 DİŞ | RING WHEEL 85 T. | |
| 12 | K21.04253 | 389 262 0773 | | 1 | ÇEMBER DİŞLİ SEKMANI | LOCK RING | |
| 13 | K21.03442 | 930 262 0125 | (389 262 1425) | 1 | PLANET ÇAN DİŞLİ 85 DİŞ | CARRIER HUB 85 T. | |
| 14 | K21.03037 | 947 260 3036 | (947 260 0836) | 1 | TABLA SENKROMENÇ | FOLLOWER RING | |
| 15 | K21.03185 | 947 260 0945 | | 2 | AĞIR SERİ FRENLEME (Mo) | SYNCHRONIZING CONE / Mo | |
| 16 | K21.03079 | 389 262 4935 | (389 262 2035) | 1 | AĞIR SERİ YILDIZ DİŞLİ | GUIDE SLEEVE | |
| 17 | K21.03033 | 945 262 6923 | (930 262 0623) | 1 | AĞIR SERİ HALKA | ENGAGING SLEEVE | |
| 18 | K21.03431 | 960 265 0049 | (947 265 0349) | 2 | AĞIR SERİ HİLAL PABUCU | SLIDING PAD | |
| 19 | K21.04356 | 000471 120000 | | 1 | AĞIR SERİ YILDIZ DİŞLİ SEKMANI | RETAINING RING | |
| 20 | K21.03186 | 945 262 3834 | | 1 | SERİ SENKROMENÇ | ENGAGING RING | |
| 21 | K21.03625 | 008 981 3025 | (008 981 5225) | 1 | ŞANZIMAN HEYKEL BİLYASI | ROLLER BEARING | 80X150X28mm |



**Original parts names, oem numbers, symbols and descriptions used in this catalogue are for reference purposes only.**

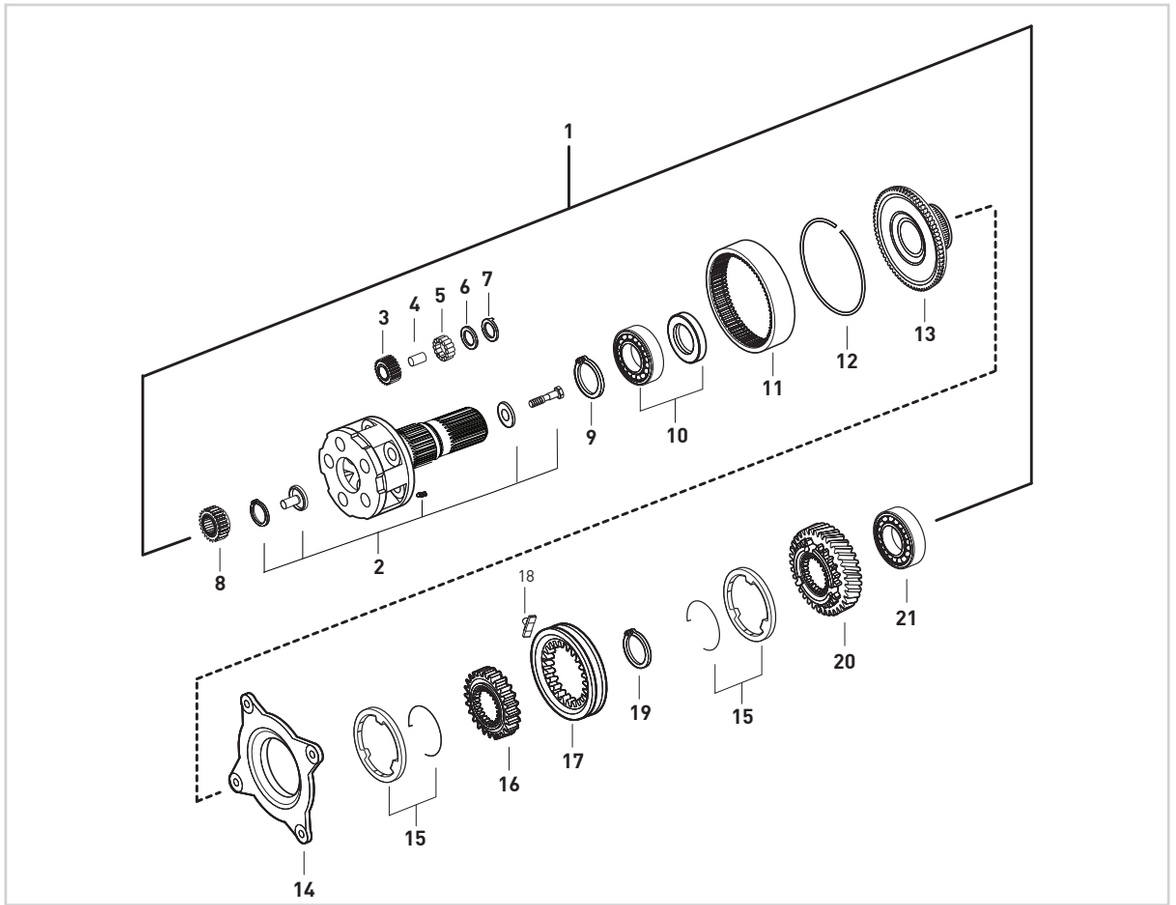


| Fig. | Kacmaz No. | Oem No | Oem Old No | Pcs. | Ürün Tanımı | Description | Sizes |
|---|---|---|---|---|---|---|---|
| 1 | K21.06384 | | | Kit | AĞIR SERİ ARKA AKTARMA KOMPLE | PLANETARY CARRIER COMPLETE | |
| 2 | K21.03180 | 946 260 3561 | (946 260 3661) | 1 | ŞANZIMAN HEYKELİ (BOŞ) | PLANETARY CARRIER (EMPTY) | |
| | | | (945 260 4561) | | | | |
| | | | (945 260 4461) | | | | |
| 3 | K21.03436 | 945 262 0006 | | 5 | HEYKEL KOZA DİŞLİSİ 28 DİŞ | PLANETARY GEAR 28 T. | |
| 4 | K21.03437 | 389 262 0407 | | 5 | HEYKEL KOZA DİŞLİ PİMİ | PLANETARY GEAR PIN | |
| 5 | K21.03816 | 000 981 4186 | (000 981 4386) | 125 | HEYKEL KOZA DİŞLİ TANE BİLYA | NEEDLE ROLLER | D5X39,6 |
| 6 | K21.04074 | 389 262 0162 | (389 262 6462) | 10 | HEYKEL KOZA DİŞLİ PULU | THRUST WASHER | |
| 7 | K21.04075 | 945 262 1162 | (945 262 0162) | 10 | HEYKEL KOZA DİŞLİ PULU | THRUST WASHER | |
| 8 | K21.03169 | 945 262 0909 | (389 262 0809) | 1 | GÜNEŞ DİŞLİ 25 DİŞ | SUN GEAR 25 T. | |
| | | | (389 262 0909) | | | | |
| 9 | K21.06864 | 000472 130000 | | 1 | ÇEMBER DİŞLİ BİLYA SEKMANI | RETAINING RING | 130X4mm |
| 10 | K21.03614 | 008 981 1325 | (004 981 8725) | 1 | ÇEMBER DİŞLİ BİLYASI | ROLLER BEARING | 90X130X14mm |
| 11 | K21.03449 | 945 262 1208 | (945 262 0808) | 1 | ÇEMBER DİŞLİ 85 DİŞ | RING WHEEL 85 T. | |
| 12 | K21.04253 | 389 262 0773 | | 1 | ÇEMBER DİŞLİ SEKMANI | LOCK RING | |
| 13 | K21.03442 | 930 262 0125 | (389 262 1425) | 1 | PLANET ÇAN DİŞLİ 85 DİŞ | CARRIER HUB 85 T. | |
| 14 | K21.03037 | 947 260 3036 | (947 260 0836) | 1 | TABLA SENKROMENÇ | FOLLOWER RING | |
| 15 | K21.03185 | 947 260 0945 | | 2 | AĞIR SERİ FRENLEME (Mo) | SYNCHRONIZING CONE / Mo | |
| 16 | K21.03079 | 389 262 4935 | (389 262 2035) | 1 | AĞIR SERİ YILDIZ DİŞLİ | GUIDE SLEEVE | |
| 17 | K21.03033 | 945 262 6923 | (930 262 0623) | 1 | AĞIR SERİ HALKA | ENGAGING SLEEVE | |
| 18 | K21.03431 | 960 265 0049 | (947 265 0349) | 2 | AĞIR SERİ HİLAL PABUCU | SLIDING PAD | |
| 19 | K21.04356 | 000471 120000 | | 1 | AĞIR SERİ YILDIZ DİŞLİ SEKMANI | RETAINING RING | |
| 20 | K21.03188 | 930 264 0320 | | 1 | RETARDER DİŞLİSİ 64 DİŞ. | RETARDER GEAR 64 T. | |
| 21 | K21.03625 | 008 981 3025 | (008 981 5225) | 1 | ŞANZIMAN ARKA BİLYA | ROLLER BEARING | 80X150X28mm |



Original parts names, oem numbers, symbols and descriptions used in this catalogue are for reference purposes only.

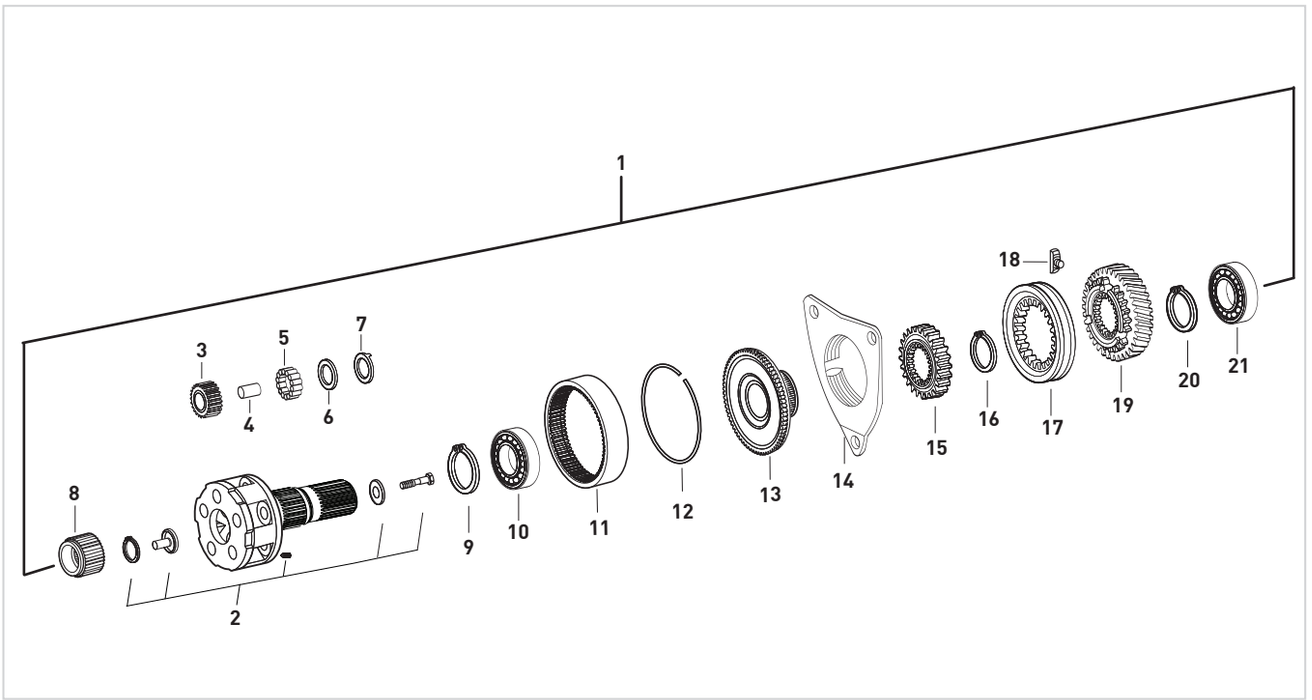


| Fig. | Kacmaz No. | Oem No | Oem Old No | Pcs. | Ürün Tanımı | Description | Sizes |
|---|---|---|---|---|---|---|---|
| 1 | K21.06986 | | | Kit | ŞANZIMAN HEYKELİ KOMPLE | PLANETARY CARRIER COMPLETE | |
| 2 | K21.03180 | 946 260 3561 | (946 260 3661) | 1 | ŞANZIMAN HEYKELİ (BOŞ) | PLANETARY CARRIER (EMPTY) | |
| | | | (945 260 4561) | | | | |
| | | | (945 260 4461) | | | | |
| 3 | K21.03436 | 945 262 0006 | | 5 | HEYKEL KOZA DİŞLİSİ 28 DİŞ | PLANETARY GEAR 28 T. | |
| 4 | K21.03437 | 389 262 0407 | | 5 | HEYKEL KOZA DİŞLİ PİMİ | PLANETARY GEAR PIN | |
| 5 | K21.03816 | 000 981 4186 | (000 981 4386) | 125 | HEYKEL KOZA DİŞLİ TANE BİLYA | NEEDLE ROLLER | D5X39,6 |
| 6 | K21.04074 | 389 262 0162 | (389 262 6462) | 10 | HEYKEL KOZA DİŞLİ PULU | THRUST WASHER | |
| 7 | K21.04075 | 945 262 1162 | (945 262 0162) | 10 | HEYKEL KOZA DİŞLİ PULU | THRUST WASHER | |
| 8 | K21.06506 | 960 262 0009 | (948 262 0209) | 1 | GÜNEŞ DİŞLİ 25 DİŞ | SUN GEAR 25 T. | |
| 9 | K21.06864 | 000472 130000 | | 1 | ÇEMBER DİŞLİ BİLYA SEKMANI | RETAINING RING | 130X4mm |
| 10 | K21.03614 | 008 981 1325 | (004 981 8725) | 1 | ÇEMBER DİŞLİ BİLYASI | ROLLER BEARING | 90X130X14mm |
| 11 | K21.03449 | 945 262 1208 | (945 262 0808) | 1 | ÇEMBER DİŞLİ 85 DİŞ | RING WHEEL 85 T. | |
| 12 | K21.04253 | 389 262 0773 | | 1 | ÇEMBER DİŞLİ SEKMANI | LOCK RING | |
| 13 | K21.03442 | 930 262 0125 | (389 262 1425) | 1 | PLANET ÇAN DİŞLİ 85 DİŞ | CARRIER HUB 85 T. | |
| 14 | K21.06592 | 960 260 2336 | | 1 | TABLA SENKROMENÇ | FOLLOWER RING | |
| 15 | K21.03079 | 389 262 4935 | (389 262 2035) | 1 | AĞIR SERİ YILDIZ DİŞLİ 73 DİŞ | SYNCHRONIZER HUB 73 T. | |
| 16 | K21.04356 | 000471 120000 | | 1 | AĞIR SERİ YILDIZ DİŞLİ SEKMANI | RETAINING RING | |
| 17 | K21.06594 | 960 262 1323 | | 1 | AĞIR SERİ SENK.HALKA | ENGAGING SLEEVE | |
| 18 | K21.03431 | 960 265 0049 | (947 265 0349) | 2 | AĞIR SERİ HİLAL PABUCU | SLIDING PAD | |
| 19 | K21.06565 | 960 264 2720 | | 1 | RETARDER DİŞLİSİ | RETARDER GEAR | |
| 20 | K21.06865 | 000472 150000 | | 1 | ŞANZIMAN HEYKEL BİLYA SEKMANI | RETAINING RING | |
| 21 | K21.03625 | 008 981 3025 | (008 981 5225) | 1 | ŞANZIMAN ARKA BİLYA | ROLLER BEARING | 80X150X28mm |



**Original parts names, oem numbers, symbols and descriptions used in this catalogue are for reference purposes only.**

| Fig. | Kacmaz No. | Oem No | Oem Old No | Pcs. | Ürün Tanımı | Description |
|---|---|---|---|---|---|---|
| 1 | K21.03085 | 947 264 0005 | (389 269 0310) | 1 | YAĞ POMPA MİLİ | OIL PUMP SHAFT |
| 1 | K21.03670 | 947 264 0105 | | 1 | YAĞ POMPA MİLİ (RETARDER) | OIL PUMP SHAFT |
| 2 | K21.03511 | 029 997 5748 | | 1 | YAĞ POMPA KAPAK ORİNGİ | O-RING |
| 3 | K21.03558 | 947 264 0287 | | 1 | YAĞ POMPA KAPAĞI | OIL PUMP COVER |
| 4 | K21.03613 | 004 981 9225 | (004 981 8625) | 1 | PTO MİL BİLYASI | ROLLER BEARING |
| 5 | K21.06964 | 000471 045000 | (003 994 3741) | 1 | PTO MİL BİLYA SEKMANI | RETAINING RING |
| 6 | K21.06998 | 017 981 1705 | | 1 | PTO BORU DİŞLİ BİLYASI | ROLLER BEARING |
| 7 | | 947 260 4708 | | 1 | PTO BORU DİŞLİ | GEAR |
| 8 | | 017 981 1805 | | 2 | PTO BORU DİŞLİ BİLYASI | ROLLER BEARING |
| 9 | K21.04334 | 945 264 0006 | | 1 | PTO ARA ADAPTÖR MİLİ | INTERM.SHAFT |
| 10 | | 387 264 3652 | | 2 | BİLYA AYAR RAYNELİ | THRUST WASHER |
| 10 | | 387 264 3752 | | 2 | BİLYA AYAR RAYNELİ | THRUST WASHER |
| 10 | | 387 264 3852 | | 2 | BİLYA AYAR RAYNELİ | THRUST WASHER |
| 11 | | 000988 022010 | | 2 | BİLYA AYAR PULU | THRUST WASHER |
| 12 | K21.04333 | 385 993 5201 | | 1 | YAY | SPRING |
| 13 | | 912009 022100 | | 1 | BİLYA AYAR PUL SEKMANI | RETAINING RING |
| 14 | K21.04332 | 000625 000629 | | 1 | PTO MIL ŞAPKASI | PTO SHAFT CAP |
| 15 | | 016 981 6705 | | 1 | PTO BORU DİŞLİ BİLYASI | ROLLER BEARING |
| 16 | | 947 264 0621 | (947 264 0521) | 1 | PTO BORU DİŞLİ | GEAR |
| 17 | K21.04362 | | | kit | ARA ADAPTÖR MİLİ KOMPLE | INTERM.SHAFT COMP. |
| 18 | K21.06346 | 970 260 0457 | | kit | P.T.O VENTİLİ | VALVE |

P.T.O. (POWER TAKE OFF)

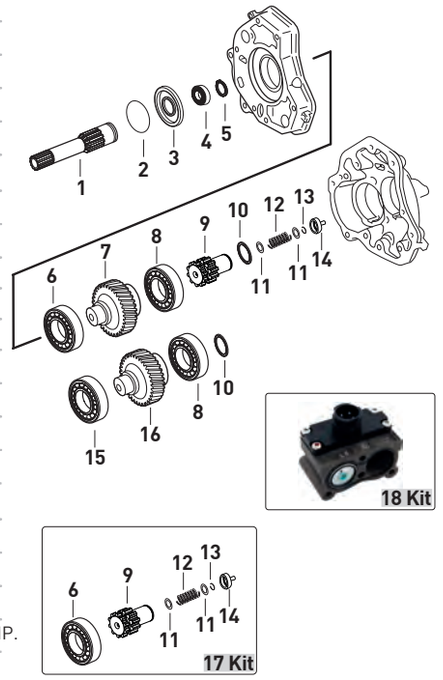


| Fig. | Kacmaz No. | Oem No | Oem Old No | Pcs. | Ürün Tanımı | Description |
|---|---|---|---|---|---|---|
| 1 | K21.06969 | 960 264 0105 | | 1 | PTO MİLİ | INTERM.SHAFT |
| 2 | K21.03558 | 947 264 0287 | | 1 | YAĞ POMPA KAPAĞI | OIL PUMP COVER |
| 3 | K21.03613 | 004 981 9225 | (004 981 8625) | 1 | PTO MİL BİLYASI | ROLLER BEARING |
| 4 | K21.06964 | 000471 045000 | (003 994 3741) | 1 | PTO MİL BİLYA SEKMANI | RETAINING RING |
| 5 | K21.06998 | 017 981 1705 | | 1 | PTO BORU DİŞLİ BİLYASI | ROLLER BEARING |
| 6 | | 947 260 4708 | | 1 | PTO BORU DİŞLİ | GEAR |
| 7 | | 017 981 1805 | | 2 | PTO BORU DİŞLİ BİLYASI | ROLLER BEARING |
| 8 | K21.04334 | 945 264 0006 | | 1 | PTO ARA ADAPTÖR MİLİ | INTERM.SHAFT |
| 9 | | 387 264 3652 | | 2 | BİLYA AYAR RAYNELİ | THRUST WASHER |
| 9 | | 387 264 3752 | | 2 | BİLYA AYAR RAYNELİ | THRUST WASHER |
| 9 | | 387 264 7152 | | 2 | BİLYA AYAR RAYNELİ | THRUST WASHER |
| 9 | | 387 264 4052 | | 2 | BİLYA AYAR RAYNELİ | THRUST WASHER |
| 10 | | 000988 022010 | | 2 | BİLYA AYAR PULU | THRUST WASHER |
| 11 | K21.04333 | 385 993 5201 | | 1 | YAY | SPRING |
| 12 | | 990 990 1700 | | 1 | BİLYA AYAR PUL SEKMANI | RETAINING RING |
| 13 | K21.04332 | 000625 000629 | | 1 | PTO MIL ŞAPKASI | PTO SHAFT CAP |
| 14 | | 990 981 0300 | | 1 | PTO BORU DİŞLİ BİLYASI | ROLLER BEARING |
| 15 | | 947 264 0921 | (947 264 0821) | 1 | PTO BORU DİŞLİ | GEAR |
| 16 | K21.04362 | | | kit | ARA ADAPTÖR MİLİ KOMPLE | INTERM.SHAFT COMP. |

P.T.O. (POWER TAKE OFF)

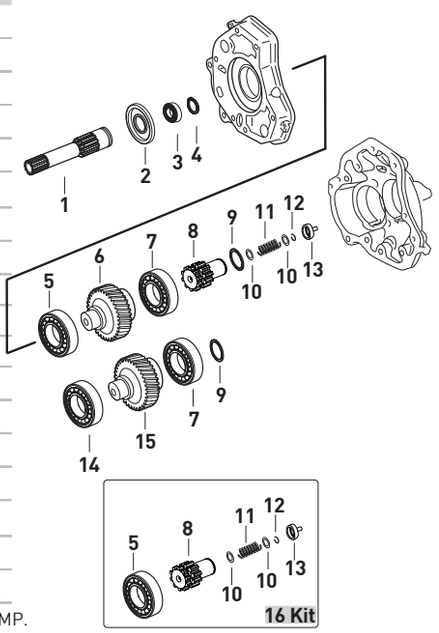






Original parts names, oem numbers, symbols and descriptions used in this catalogue are for reference purposes only.

# GEARBOX G 241-16 KL / 17,00 - 1,00

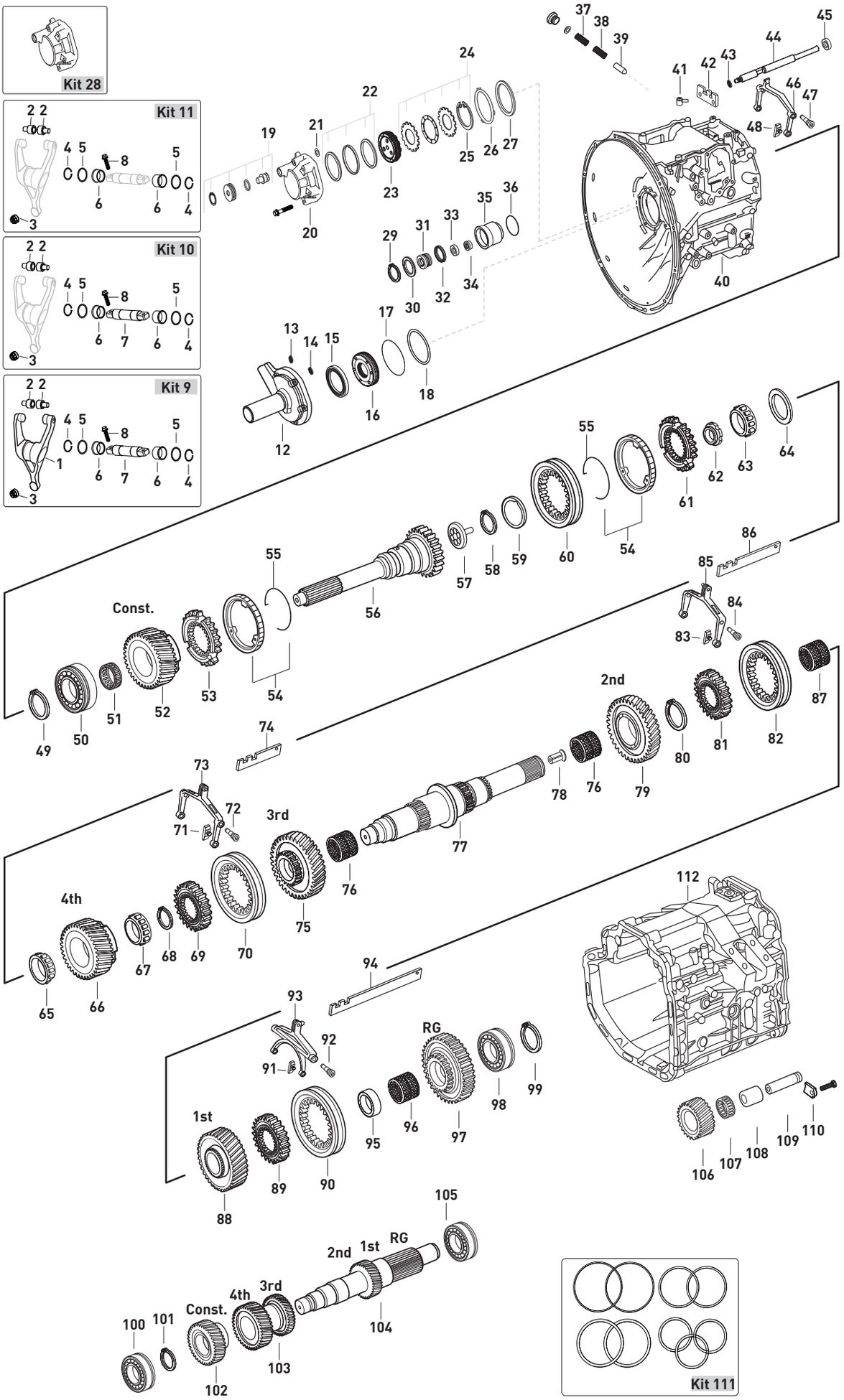




Original parts names, oem numbers, symbols and descriptions used in this catalogue are for reference purposes only.

| Fig. | Kacmaz No | Oem No | Oem Old No | Pcs. | Ürün Tanımı | Description | Sizes | Not | 715515 | 715519 | 715535 |
|---|---|---|---|---|---|---|---|---|---|---|---|
| 1 | | 655 250 1513 | | 1 | DEBRİYAJ ÇATALI | RELEASE FORK | | | ♦ | ♦ | ♦ |
| 2 | K21.07038 | 000 254 0017 | | 2 | DEBRİYAJ ÇATAL BURÇ VE PİMİ | CAM ROLLER | | | ♦ | ♦ | ♦ |
| 3 | K21.07040 | 000 254 0335 | | 1 | DEBRİYAJ ÇATAL PLASTİK BURCU | PLASTIC BUSHING | | | ♦ | ♦ | ♦ |
| 4 | | 912009 035100 | | 2 | DEBRİYAJ ÇATAL MİL SEKMANI | RETAINING RING | | | ♦ | ♦ | ♦ |
| 5 | | 000988 036100 | | 2 | DEBRİYAJ ÇATAL MİL AYAR PULU | WASHER | | | ♦ | ♦ | ♦ |
| 6 | | 002 992 1501 | | 2 | DEBRİYAJ ÇATAL MİL BURCU | BUSHING | 36,5X43X16mm | | ♦ | ♦ | ♦ |
| 7 | | 655 254 0206 | | 1 | DEBRİYAJ ÇATAL MİLİ | SHAFT | | | ♦ | ♦ | ♦ |
| 8 | | 910105 012026 | | 2 | DEBRİYAJ ÇATAL MİL VİDASI | SCREW | M12X40mm | | ♦ | ♦ | ♦ |
| 9 | K21.07036 | 655 250 1813 | | Kit | DEBRİYAJ ÇATALI KOMPLE | RELEASE FORK COMPLETE | | | ♦ | ♦ | ♦ |
| 9 | K21.97036 | 655 250 1813-S | | Kit | DEB.ÇATALI KOMPLE (BİLYALI TİP) | RELEASE FORK COMPLETE | | WITH BEARING | ♦ | ♦ | ♦ |
| 10 | K21.07037 | | | Kit | DEBRİYAJ ÇATALI TAMİR TAKIMI | RELEASE FORK REPAIR KIT | | | ♦ | ♦ | ♦ |
| 11 | K21.07039 | | | Kit | DEBRİYAJ ÇATALI TAMİR TK.MİLSİZ | RELEASE FORK REPAIR KIT | | W/OUT SHAFT | ♦ | ♦ | ♦ |
| 12 | K21.03429 | 945 261 1118 | (945 261 0118) | 1 | PRİZDİREK KEÇE KAPAĞI | COVER | | | ♦ | ♦ | ♦ |
| | | | (945 261 0818) | | | | | | | | |
| 13 | K21.06637 | 019 997 8348 | (020 997 7948) | 1 | PRİZDİREK KEÇE KAPAK ORİNGİ | O-RING | 14X4mm | | ♦ | ♦ | ♦ |
| 14 | K21.06636 | 015 997 4048 | (020 997 8748) | 1 | PRİZDİREK KEÇE KAPAK ORİNGİ | O-RING | 5X3mm | | ♦ | ♦ | ♦ |
| 15 | K21.03509 | 019 997 0547 | (023 997 7847) | 1 | PRİZDİREK KEÇESİ | OIL SEAL | 56X72X8mm | | ♦ | ♦ | ♦ |
| | | | (019 997 0647) | | | | | | | | |
| | | | (022 997 8547) | | | | | | | | |
| 16 | K21.06038 | 389 261 0665 | (389 261 0765) | 1 | YAĞ TUTUCU DİSK | OIL BAFFLE | 75X16mm | | ♦ | ♦ | ♦ |
| | | | (389 261 0865) | | | | | | | | |
| 17 | K21.06635 | 020 997 7848 | | 1 | PRİZDİREK KEÇE KAPAK ORİNGİ | O-RING | 138X3mm | | ♦ | ♦ | ♦ |
| 18 | K21.04162 | 389 262 4152 | (389 262 0955) | 1 | PRİZDİREK AYAR RAYNELİ | THRUST WASHER | 0,10mm | | ♦ | ♦ | ♦ |
| 18 | K21.04243 | 389 262 0855 | | 1 | PRİZDİREK AYAR RAYNELİ | THRUST WASHER | 0,15mm | | ♦ | ♦ | ♦ |
| 18 | K21.04151 | 389 262 0755 | | 1 | PRİZDİREK AYAR RAYNELİ | THRUST WASHER | 0,20mm | | ♦ | ♦ | ♦ |
| 18 | K21.06715 | 389 262 3055 | | 1 | PRİZDİREK AYAR RAYNELİ | THRUST WASHER | 0,25mm | | ♦ | ♦ | ♦ |
| 18 | K21.04221 | 389 262 3255 | | 1 | PRİZDİREK AYAR RAYNELİ | THRUST WASHER | 0,31mm | | ♦ | ♦ | ♦ |
| 18 | K21.04163 | 389 262 3555 | (389 262 0655) | 1 | PRİZDİREK AYAR RAYNELİ | THRUST WASHER | 0,40mm | | ♦ | ♦ | ♦ |
| | | | (389 262 4452) | | | | | | | | |
| 18 | K21.04164 | 389 262 3755 | (389 262 1954) | 1 | PRİZDİREK AYAR RAYNELİ | THRUST WASHER | 0,46mm | | ♦ | ♦ | ♦ |
| 18 | K21.04246 | 389 262 3855 | | 1 | PRİZDİREK AYAR RAYNELİ | THRUST WASHER | 0,49mm | | ♦ | ♦ | ♦ |
| 18 | K21.04250 | 389 262 4055 | (389 262 0155) | 1 | PRİZDİREK AYAR RAYNELİ | THRUST WASHER | 0,55mm | | ♦ | ♦ | ♦ |
| | | | (389 262 2154) | | | | | | | | |
| 18 | K21.04167 | 389 262 4255 | (389 262 2254) | 1 | PRİZDİREK AYAR RAYNELİ | THRUST WASHER | 0,61mm | | ♦ | ♦ | ♦ |
| 18 | K21.04168 | 389 262 4355 | (389 262 2354) | 1 | PRİZDİREK AYAR RAYNELİ | THRUST WASHER | 0,64mm | | ♦ | ♦ | ♦ |
| 18 | K21.04169 | 389 262 4555 | (389 262 2454) | 1 | PRİZDİREK AYAR RAYNELİ | THRUST WASHER | 0,70mm | | ♦ | ♦ | ♦ |
| 18 | K21.04170 | 389 262 4755 | (389 262 2554) | 1 | PRİZDİREK AYAR RAYNELİ | THRUST WASHER | 0,76mm | | ♦ | ♦ | ♦ |
| 18 | K21.04281 | 389 262 4855 | (389 262 0555) | 1 | PRİZDİREK AYAR RAYNELİ | THRUST WASHER | 0,79mm | | ♦ | ♦ | ♦ |
| 18 | K21.04282 | 389 262 5555 | | 1 | PRİZDİREK AYAR RAYNELİ | THRUST WASHER | 1,00mm | | ♦ | ♦ | ♦ |
| 18 | K21.04171 | 389 262 9654 | (389 262 2654) | 1 | PRİZDİREK AYAR RAYNELİ | THRUST WASHER | 2,00mm | | ♦ | ♦ | ♦ |
| 19 | K21.06498 | 930 260 0058 | | 1 | HAVALANDIRMA TAMİR TAKIMI | REPAIR KIT | | | ♦ | ♦ | ♦ |
| 20 | K21.06301 | 960 261 1933 | | 1 | GRUP DURDURUCU KAPAĞI | COVER | | | ♦ | ♦ | ♦ |
| 21 | K21.06636 | 015 997 4048 | (020 997 8748) | 1 | GRUP DURDURUCU PİSTON ORİNGİ | O-RING | 5X3mm | | ♦ | ♦ | ♦ |
| 22 | K21.06396 | 947 260 0718 | (960 260 3318) | 1 | GRUP DURD.PİSTON TAMİR TAKIMI | REPAIR KIT | | | ♦ | ♦ | ♦ |
| 23 | K21.06302 | 960 260 1718 | | 1 | GRUP DURDURUCU KAPAK PİSTONU | PISTON | | | ♦ | ♦ | ♦ |
| 24 | K21.06431 | 960 262 0291 | (960 262 0191) | 1 | KAVRAMA HALKA SETİ | PARTS KIT | | | ♦ | ♦ | ♦ |
| | | | (960 262 0091) | | | | | | | | |
| | | | (947 260 4036) | | | | | | | | |
| 25 | K21.06730 | 970 994 3541 | (000472 100000) | 1 | GRUP DURDURUCU KİLİT SEKMANI | RETAINING RING | 3,00mm | | ♦ | ♦ | ♦ |
| 26 | K21.06533 | 028 997 2348 | (004 997 2248) | 1 | GRUP DURDURUCU KAPAK ORİNGİ | O-RING | 100X3mm | | ♦ | ♦ | ♦ |
| 27 | K21.04192 | 406 337 0252 | | 1 | GRUP MİLİ ÖN BİLYA RAYNELİ | THRUST WASHER | 0,10mm | | ♦ | ♦ | ♦ |
| 27 | K21.04150 | 406 337 0352 | | 1 | GRUP MİLİ ÖN BİLYA RAYNELİ | THRUST WASHER | 0,20mm | | ♦ | ♦ | ♦ |
| 27 | K21.94150 | | | 1 | GRUP MİLİ ÖN BİLYA RAYNELİ | THRUST WASHER | 0,25mm | | ♦ | ♦ | ♦ |
| 27 | K21.04338 | 406 337 0452 | | 1 | GRUP MİLİ ÖN BİLYA RAYNELİ | THRUST WASHER | 0,30mm | | ♦ | ♦ | ♦ |
| 27 | K21.04196 | 389 263 5352 | (389 263 3252) | 1 | GRUP MİLİ ÖN BİLYA RAYNELİ | THRUST WASHER | 0,40mm | | ♦ | ♦ | ♦ |
| 27 | K21.04194 | 389 263 3352 | | 1 | GRUP MİLİ ÖN BİLYA RAYNELİ | THRUST WASHER | 0,45mm | | ♦ | ♦ | ♦ |
| 27 | K21.06719 | 389 263 5652 | | 1 | GRUP MİLİ ÖN BİLYA RAYNELİ | THRUST WASHER | 0,49mm | | ♦ | ♦ | ♦ |

NOTES :
Parts encoded alphabetic and numaric are used together.

NOTLAR :
Alfabetik ve rakam ile kodlanan parçalar birlikte kullanılır.





Original parts names, oem numbers, symbols and descriptions used in this catalogue are for reference purposes only.

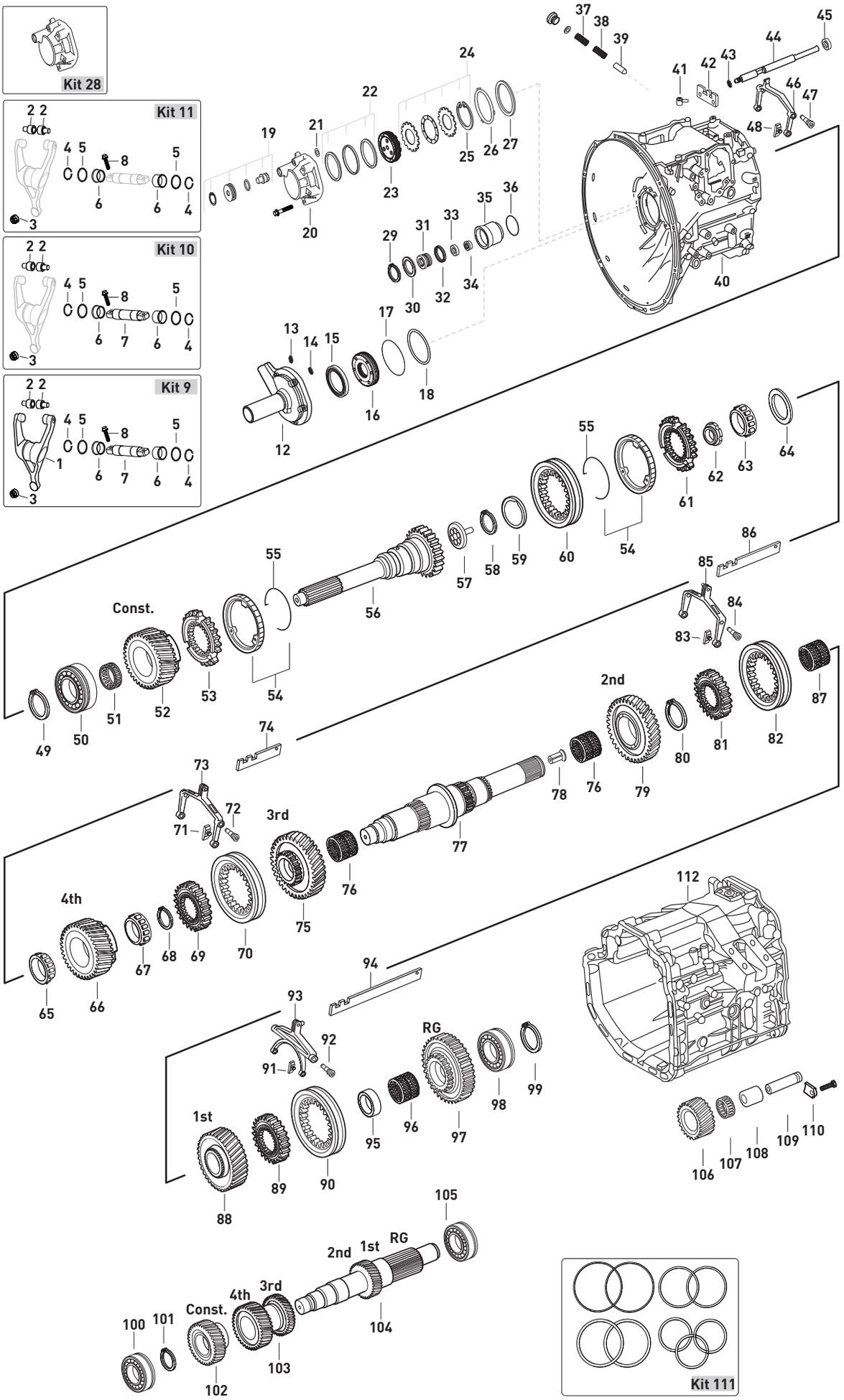




Original parts names, oem numbers, symbols and descriptions used in this catalogue are for reference purposes only.

| Fig. | Kacmaz No | Oem No | Oem Old No | Pcs. | Ürün Tanımı | Description | Sizes | Not | 715515 | 715519 | 715535 |
|---|---|---|---|---|---|---|---|---|---|---|---|
| 27 | K21.04197 | 389 263 5852 | (389 263 3552) | 1 | GRUP MİLİ ÖN BİLYA RAYNELİ | THRUST WASHER | 0,55mm | | ♦ | ♦ | ♦ |
| 27 | K21.04340 | 389 263 6052 | | 1 | GRUP MİLİ ÖN BİLYA RAYNELİ | THRUST WASHER | 0,61mm | | ♦ | ♦ | ♦ |
| 27 | K21.04198 | 389 263 6352 | (389 263 3852) | 1 | GRUP MİLİ ÖN BİLYA RAYNELİ | THRUST WASHER | 0,70mm | | ♦ | ♦ | ♦ |
| 27 | K21.04154 | 389 263 3952 | | 1 | GRUP MİLİ ÖN BİLYA RAYNELİ | THRUST WASHER | 0,75mm | | ♦ | ♦ | ♦ |
| 27 | K21.04199 | 389 263 6852 | | 1 | GRUP MİLİ ÖN BİLYA RAYNELİ | THRUST WASHER | 0,85mm | | ♦ | ♦ | ♦ |
| 27 | K21.04200 | 389 263 7352 | | 1 | GRUP MİLİ ÖN BİLYA RAYNELİ | THRUST WASHER | 1,00mm | | ♦ | ♦ | ♦ |
| 27 | K21.04201 | 389 263 7852 | | 1 | GRUP MİLİ ÖN BİLYA RAYNELİ | THRUST WASHER | 1,15mm | | ♦ | ♦ | ♦ |
| 27 | K21.04202 | 389 263 8352 | | 1 | GRUP MİLİ ÖN BİLYA RAYNELİ | THRUST WASHER | 1,30mm | | ♦ | ♦ | ♦ |
| 28 | K21.06487 | | | 1 | GRUP DURDURUCU KAPAĞI KOMPLE | REPAIR KIT | | | ♦ | ♦ | ♦ |
| 29 | | 006 994 4241 | (000472 065001) | 1 | TAKVİYE PİSTON SEKMANI | RETAINING RING | 65X2,5mm | | ♦ | ♦ | ♦ |
| 30 | K21.04233 | 389 262 2555 | | 1 | TAKVİYE SİLİNDİR PULU | SPACER WASHER | 0,70mm | | ♦ | ♦ | ♦ |
| 30 | K21.04234 | 389 262 2655 | | 1 | TAKVİYE SİLİNDİR PULU | SPACER WASHER | 0,90mm | | ♦ | ♦ | ♦ |
| 30 | K21.04112 | 389 262 3254 | | 1 | TAKVİYE SİLİNDİR PULU | SPACER WASHER | 1,05mm | | ♦ | ♦ | ♦ |
| 30 | K21.04111 | 389 262 3354 | | 1 | TAKVİYE SİLİNDİR PULU | SPACER WASHER | 1,10mm | | ♦ | ♦ | ♦ |
| 30 | K21.04109 | 389 262 3554 | | 1 | TAKVİYE SİLİNDİR PULU | SPACER WASHER | 1,20mm | | ♦ | ♦ | ♦ |
| 30 | K21.04105 | 389 262 2052 | | 1 | TAKVİYE SİLİNDİR PULU | SPACER WASHER | 1,40mm | | ♦ | ♦ | ♦ |
| 30 | K21.04093 | 389 262 2355 | | 1 | TAKVİYE SİLİNDİR PULU | SPACER WASHER | 1,79mm | | ♦ | ♦ | ♦ |
| 30 | K21.04025 | 389 262 3252 | | 1 | TAKVİYE SİLİNDİR PULU | SPACER WASHER | 2,00mm | | ♦ | ♦ | ♦ |
| 30 | K21.04024 | 389 262 3352 | | 1 | TAKVİYE SİLİNDİR PULU | SPACER WASHER | 2,50mm | | ♦ | ♦ | ♦ |
| 31 | K21.06994 | 945 267 0218 | (387 267 0918) | 1 | TAKVİYE MİL PİSTONU | PISTON | | | ♦ | ♦ | ♦ |
| | | | (387 267 0618) | | | | | | | | |
| 32 | K21.03524 | 006 997 6447 | (020 997 6647) | 1 | TAKVİYE HAVA KEÇESİ | OIL SEAL | 41X48X11,5mm | | ♦ | ♦ | ♦ |
| | | | (012 997 3347) | | | | | | | | |
| 33 | K21.04178 | 387 267 0650 | (387 267 0250) | 1 | TAKVİYE SİLİNDİR BURCU | BUSHING | 34X22X8mm | | ♦ | ♦ | ♦ |
| 34 | K21.03523 | 000 267 0197 | (000 267 0397) | 1 | TAKVİYE HİLAL MİL KEÇESİ | OIL SEAL | 22X32X8mm | | ♦ | ♦ | ♦ |
| 35 | K21.06036 | 945 267 0819 | (945 267 0119) | 1 | TAKVİYE SİLİNDİR GÖVDESİ | CYLINDER | | | ♦ | ♦ | ♦ |
| | | | (945 267 0719) | | | | | | | | |
| | | | (945 267 0019) | | | | | | | | |
| 36 | K21.06534 | 022 997 4248 | | 1 | TAKVİYE SİLİNDİR ORİNGİ | O-RING | 55,6X3mm | | ♦ | ♦ | ♦ |
| 37 | K21.06015 | 387 993 4501 | | 1 | ŞANZ.TAKVİYE KİLİT FİŞEK YAYI | SPRING | 6,2X63mm | | ♦ | ♦ | ♦ |
| 38 | K21.03500 | 387 993 4401 | (387 993 2501) | 1 | KİLİT YAYI | SPRING | 9,8X63,3mm | | ♦ | ♦ | ♦ |
| 39 | K21.03492 | 389 267 1174 | (387 267 0074) | 1 | KİLİT FİŞEĞİ | PIN | | | ♦ | ♦ | ♦ |
| 40 | | 945 260 8212 | | 1 | ŞANZIMAN ÖN GÖVDE | HOUSING | | | ♦ | ♦ | ♦ |
| 41 | K21.06529 | 437 261 0082 | (945 261 0082) | 1 | ŞANZIMAN HAVALANDIRMA | CAP | | | ♦ | ♦ | ♦ |
| 42 | | 930 265 0345 | | 1 | VİTES HİLAL ÇITA KİLİTLEMESİ | GUIDE | | | ♦ | ♦ | ♦ |
| 43 | K21.04160 | 387 263 2652 | | 1 | TAKVİYE HİLAL MİL PULU | SPACER WASHER | 0,20mm | | ♦ | ♦ | ♦ |
| 43 | K21.04161 | 387 263 2752 | | 1 | TAKVİYE HİLAL MİL PULU | SPACER WASHER | 0,40mm | | ♦ | ♦ | ♦ |
| 43 | | 387 263 2852 | | 1 | TAKVİYE HİLAL MİL PULU | SPACER WASHER | 0,60mm | | ♦ | ♦ | ♦ |
| 43 | | 387 263 3052 | | 1 | TAKVİYE HİLAL MİL PULU | SPACER WASHER | 1,00mm | | ♦ | ♦ | ♦ |
| 44 | K21.07003 | 945 267 0017 | | 1 | TAKVİYE HİLAL MİLİ | GEAR SHIFT RAIL | | | ♦ | ♦ | ♦ |
| 45 | K21.04252 | 000 992 7603 | (389 267 0050) | 1 | TAKVİYE HİLAL MİL BURCU | BUSHING | 21X27X16mm | | ♦ | ♦ | ♦ |
| 46 | | 930 265 0201 | | 1 | TAKVİYE HİLALİ | GEAR SHIFT FORK | | | ♦ | ♦ | ♦ |
| 47 | K21.04307 | 960 265 0774 | (945 265 1274) | 2 | HİLAL CİVATASI | PIN | | | ♦ | ♦ | ♦ |
| | | | (945 265 2974) | | | | | | | | |
| | | | (945 265 2774) | | | | | | | | |
| 48 | K21.03431 | 960 265 0049 | (947 265 0349) | 2 | TAKVİYE HİLAL PABUCU | SLIDING PAD | | | ♦ | ♦ | ♦ |
| | | | (389 265 2749) | | | | | | | | |
| 49 | K21.04347 | 387 262 8673 | | 1 | PRİZDİREK ÖN BİLYA SEKMANI | RETAINING RING | 3,15mm | | ♦ | ♦ | ♦ |
| 49 | K21.04346 | 387 262 8773 | | 1 | PRİZDİREK ÖN BİLYA SEKMANI | RETAINING RING | 3,20mm | | ♦ | ♦ | ♦ |
| 49 | K21.07015 | 387 262 8873 | | 1 | PRİZDİREK ÖN BİLYA SEKMANI | RETAINING RING | 3,25mm | | ♦ | ♦ | ♦ |
| 49 | K21.04348 | 387 262 8973 | | 1 | PRİZDİREK ÖN BİLYA SEKMANI | RETAINING RING | 3,30mm | | ♦ | ♦ | ♦ |
| 49 | K21.07016 | 387 262 9073 | | 1 | PRİZDİREK ÖN BİLYA SEKMANI | RETAINING RING | 3,35mm | | ♦ | ♦ | ♦ |
| 49 | K21.04349 | 387 262 9173 | | 1 | PRİZDİREK ÖN BİLYA SEKMANI | RETAINING RING | 3,40mm | | ♦ | ♦ | ♦ |
| 49 | K21.07017 | 387 262 9273 | | 1 | PRİZDİREK ÖN BİLYA SEKMANI | RETAINING RING | 3,45mm | | ♦ | ♦ | ♦ |
| 49 | K21.04350 | 387 262 9373 | | 1 | PRİZDİREK ÖN BİLYA SEKMANI | RETAINING RING | 3,50mm | | ♦ | ♦ | ♦ |
| 50 | K21.03618 | 011 981 1305 | (014 981 9005) | 1 | PRİZDİREK ÖN BİLYA | ROLLER BEARING | 75X140X34,25mm | | ♦ | ♦ | ♦ |
| | | | (008 981 8605) | | | | | | | | |

NOTES :
Parts encoded alphabetic and numaric are used together.

NOTLAR :
Alfabetik ve rakam ile kodlanan parçalar birlikte kullanılır.





Original parts names, oem numbers, symbols and descriptions used in this catalogue are for reference purposes only.

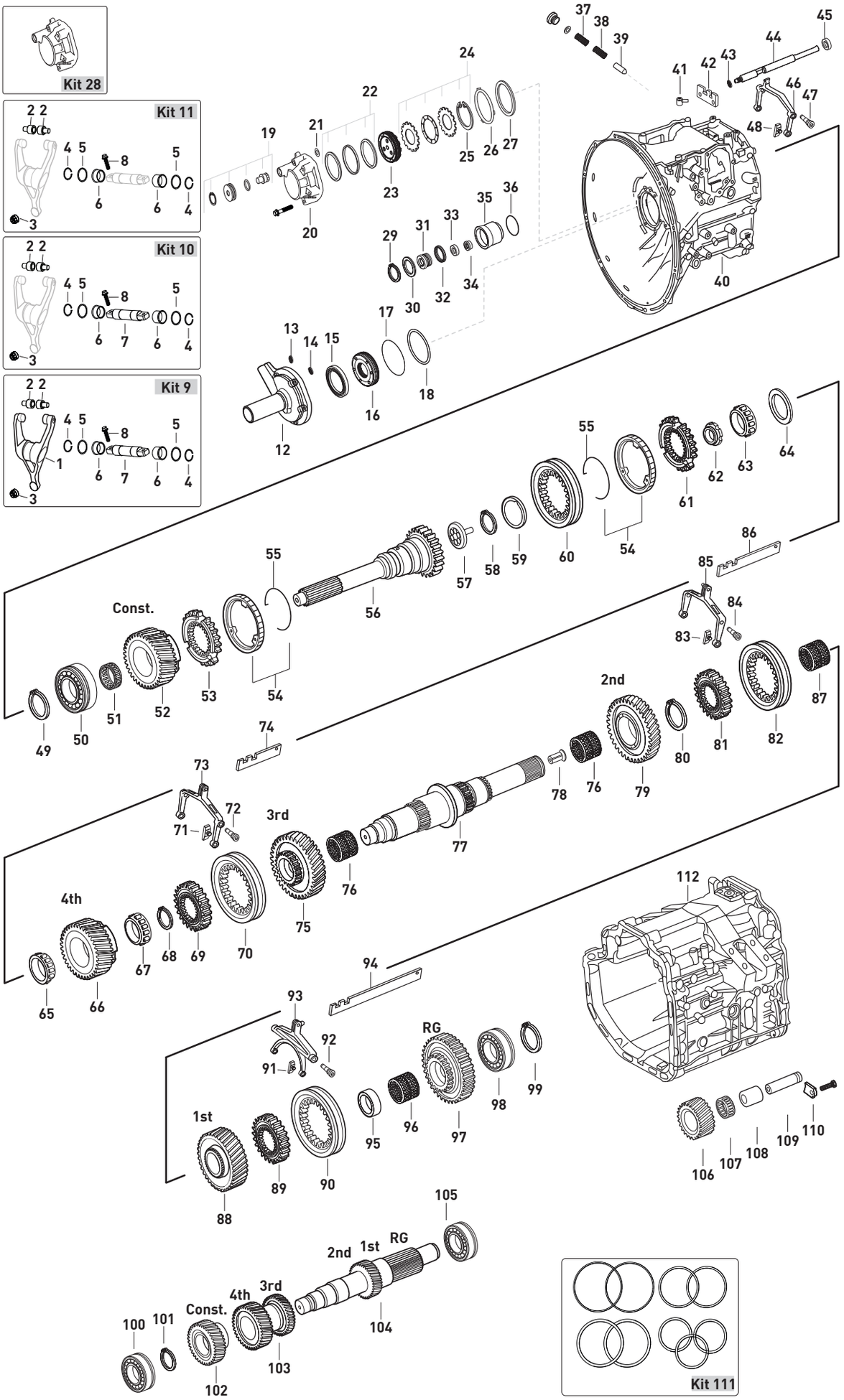




Original parts names, oem numbers, symbols and descriptions used in this catalogue are for reference purposes only.

| Fig. | Kacmaz No | Oem No | Oem Old No | Pcs. | Ürün Tanımı | Description | Sizes | Not | 715515 | 715519 | 715535 |
|---|---|---|---|---|---|---|---|---|---|---|---|
| 51 | K21.03818 | 018 981 8210 | (018 981 6410) | 1 | TAKVİYE MASURA BİLYA | NEEDLE CAGE | 84X90X39,5mm | | ♦ | ♦ | ♦ |
| 52 | K21.06315 | 930 262 3117 | (930 262 0117) | 1 | TAKVİYE DİŞLİSİ 27 DİŞ | CONSTANT GEAR 27 T. | | | ♦ | ♦ | ♦ |
| | | | (930 262 0217) | | | | | | | | |
| 53 | K21.03146 | 945 262 8234 | (945 262 5434) | 1 | TAKVİYE SENKROMENÇ | ENGAGING RING | | | ♦ | ♦ | ♦ |
| 54 | K21.03148 | 947 260 1945 | (947 260 4645) | 2 | TAKVİYE FRENLEME (Mo) | SYNCHRONIZING CONE / Mo | | | ♦ | ♦ | ♦ |
| | | | (946 262 6137) | | | | | | | | |
| 54 | K21.06299 | 947 260 3545 | (947 260 5145) | 2 | TAKVİYE FRENLEME (C) | SYNCHRONIZING CONE / C | | | ♦ | ♦ | ♦ |
| | | | (947 260 2945) | | | | | | | | |
| | | | (947 260 0745) | | | | | | | | |
| 55 | K21.03055 | 387 262 0893 | (387 262 0793) | 2 | FRENLEME TELİ | SPRING | | | ♦ | ♦ | ♦ |
| 56 | K21.06284 | 930 262 1003 | (930 262 0003) | 1 | PRİZDİREK 66 DİŞ | INPUT SHAFT 66 T. | | | ♦ | ♦ | ♦ |
| 57 | K21.04001 | 976 269 0034 | (960 269 0434) | 1 | PRİZDİREK YAĞ PİPETİ | OIL COLLECTOR | | | ♦ | ♦ | ♦ |
| 58 | K21.04002 | 000 994 9841 | | 1 | PRİZDİREK YAĞ PİPET SEKMANI | RETAINING RING | | | ♦ | ♦ | ♦ |
| 59 | K21.03513 | 001 262 0262 | (000 262 8662) | 1 | PRİZDİREK ARKA KEÇE | OIL SEAL | 73,5X101X7mm | | ♦ | ♦ | ♦ |
| | | | (000 262 9062) | | | | | | | | |
| 60 | K21.03151 | 945 262 6523 | (930 262 0523) | 1 | TAKVİYE HALKA | ENGAGING SLEEVE | | | ♦ | ♦ | ♦ |
| 61 | K21.03576 | 930 262 0234 | (930 262 0034) | 1 | TAKVİYE SENKROMENÇ | ENGAGING RING | | | ♦ | ♦ | ♦ |
| 62 | K21.03432 | 945 990 0250 | (945 990 0150) | 1 | KAMALI MİL SOMUNU | NUT | M30X1,5 | | ♦ | ♦ | ♦ |
| 63 | K21.03632 | 020 981 5205 | (017 981 1305) | 1 | KAMALI MİL UÇ BİLYA | ROLLER BEARING | 39,69X40,39mm | | ♦ | ♦ | ♦ |
| 64 | K21.04024 | 389 262 3352 | | 1 | KAMALI MİL AYAR PULU | THRUST WASHER | 2,50mm | | ♦ | ♦ | ♦ |
| 64 | K21.04025 | 389 262 3252 | | 1 | KAMALI MİL AYAR PULU | THRUST WASHER | 2,00mm | | ♦ | ♦ | ♦ |
| 64 | K21.04026 | 389 262 3152 | | 1 | KAMALI MİL AYAR PULU | THRUST WASHER | 1,95mm | | ♦ | ♦ | ♦ |
| 64 | K21.04027 | 389 262 3052 | | 1 | KAMALI MİL AYAR PULU | THRUST WASHER | 1,90mm | | ♦ | ♦ | ♦ |
| 64 | K21.04028 | 389 262 2952 | | 1 | KAMALI MİL AYAR PULU | THRUST WASHER | 1,85mm | | ♦ | ♦ | ♦ |
| 64 | K21.04092 | 389 262 2455 | | 1 | KAMALI MİL AYAR PULU | THRUST WASHER | 1,82mm | | ♦ | ♦ | ♦ |
| 64 | K21.04093 | 389 262 2355 | | 1 | KAMALI MİL AYAR PULU | THRUST WASHER | 1,79mm | | ♦ | ♦ | ♦ |
| 64 | K21.04094 | 389 262 2255 | | 1 | KAMALI MİL AYAR PULU | THRUST WASHER | 1,76mm | | ♦ | ♦ | ♦ |
| 64 | K21.04095 | 389 262 2155 | | 1 | KAMALI MİL AYAR PULU | THRUST WASHER | 1,73mm | | ♦ | ♦ | ♦ |
| 64 | K21.04096 | 389 262 2055 | | 1 | KAMALI MİL AYAR PULU | THRUST WASHER | 1,67mm | | ♦ | ♦ | ♦ |
| 64 | K21.04097 | 389 262 1955 | | 1 | KAMALI MİL AYAR PULU | THRUST WASHER | 1,64mm | | ♦ | ♦ | ♦ |
| 64 | K21.04098 | 389 262 1855 | | 1 | KAMALI MİL AYAR PULU | THRUST WASHER | 1,61mm | | ♦ | ♦ | ♦ |
| 64 | K21.04099 | 389 262 1755 | | 1 | KAMALI MİL AYAR PULU | THRUST WASHER | 1,58mm | | ♦ | ♦ | ♦ |
| 64 | K21.04100 | 389 262 2352 | | 1 | KAMALI MİL AYAR PULU | THRUST WASHER | 1,55mm | | ♦ | ♦ | ♦ |
| 64 | K21.04101 | 389 262 1655 | | 1 | KAMALI MİL AYAR PULU | THRUST WASHER | 1,52mm | | ♦ | ♦ | ♦ |
| 64 | K21.04102 | 389 262 1555 | | 1 | KAMALI MİL AYAR PULU | THRUST WASHER | 1,49mm | | ♦ | ♦ | ♦ |
| 64 | K21.04103 | 389 262 1455 | | 1 | KAMALI MİL AYAR PULU | THRUST WASHER | 1,46mm | | ♦ | ♦ | ♦ |
| 64 | K21.04104 | 389 262 1355 | | 1 | KAMALI MİL AYAR PULU | THRUST WASHER | 1,43mm | | ♦ | ♦ | ♦ |
| 64 | K21.04105 | 389 262 2052 | | 1 | KAMALI MİL AYAR PULU | THRUST WASHER | 1,40mm | | ♦ | ♦ | ♦ |
| 64 | K21.04106 | 389 262 1952 | | 1 | KAMALI MİL AYAR PULU | THRUST WASHER | 1,35mm | | ♦ | ♦ | ♦ |
| 64 | K21.04107 | 389 262 2754 | | 1 | KAMALI MİL AYAR PULU | THRUST WASHER | 1,30mm | | ♦ | ♦ | ♦ |
| 64 | K21.04108 | 389 262 3654 | | 1 | KAMALI MİL AYAR PULU | THRUST WASHER | 1,25mm | | ♦ | ♦ | ♦ |
| 64 | K21.04109 | 389 262 3554 | | 1 | KAMALI MİL AYAR PULU | THRUST WASHER | 1,20mm | | ♦ | ♦ | ♦ |
| 64 | K21.04110 | 389 262 3454 | | 1 | KAMALI MİL AYAR PULU | THRUST WASHER | 1,15mm | | ♦ | ♦ | ♦ |
| 64 | K21.04111 | 389 262 3354 | | 1 | KAMALI MİL AYAR PULU | THRUST WASHER | 1,10mm | | ♦ | ♦ | ♦ |
| 64 | K21.04112 | 389 262 3254 | | 1 | KAMALI MİL AYAR PULU | THRUST WASHER | 1,05mm | | ♦ | ♦ | ♦ |
| 64 | K21.04113 | 389 262 2854 | | 1 | KAMALI MİL AYAR PULU | THRUST WASHER | 0,50mm | | ♦ | ♦ | ♦ |
| 64 | K21.94113 | | | 1 | KAMALI MİL AYAR PULU | THRUST WASHER | 0,40mm | | ♦ | ♦ | ♦ |
| 64 | K21.84113 | | | 1 | KAMALI MİL AYAR PULU | THRUST WASHER | 0,30mm | | ♦ | ♦ | ♦ |
| 64 | K21.74113 | | | 1 | KAMALI MİL AYAR PULU | THRUST WASHER | 0,20mm | | ♦ | ♦ | ♦ |
| 64 | K21.64113 | | | 1 | KAMALI MİL AYAR PULU | THRUST WASHER | 0,10mm | | ♦ | ♦ | ♦ |
| 65 | K21.03620 | 017 981 5105 | (015 981 6105) | 1 | 4.VİTES DİŞLİ ÖN BİLYA | ROLLER BEARING | 50X41,3mm | | ♦ | ♦ | ♦ |
| | | | (014 981 2605) | | | | | | | | |
| 66 | K21.06276 | 930 262 2217 | | 1 | 4.VİTES DİŞLİSİ 29 DİŞ | GEAR 4th 29 T. | | | ♦ | ♦ | ♦ |
| 67 | K21.03622 | 015 981 6205 | (015 981 8105) | 1 | 4.VİTES DİŞLİSİ ARKA BİLYA | ROLLER BEARING | 55X29,8mm | | ♦ | ♦ | ♦ |
| | | | (011 981 4505) | | | | | | | | |
| 68 | K21.04343 | 387 262 2073 | | 1 | 3./4.VİTES YILDIZ DİŞLİ SEKMANI | RETAINING RING | 2,40mm | | ♦ | ♦ | ♦ |
| 68 | K21.06687 | 387 262 2173 | | 1 | 3./4.VİTES YILDIZ DİŞLİ SEKMANI | RETAINING RING | 2,45mm | | ♦ | ♦ | ♦ |

NOTES :
Parts encoded alphabetic and numaric are used together.

NOTLAR :
Alfabetik ve rakam ile kodlanan parçalar birlikte kullanılır.





Original parts names, oem numbers, symbols and descriptions used in this catalogue are for reference purposes only.

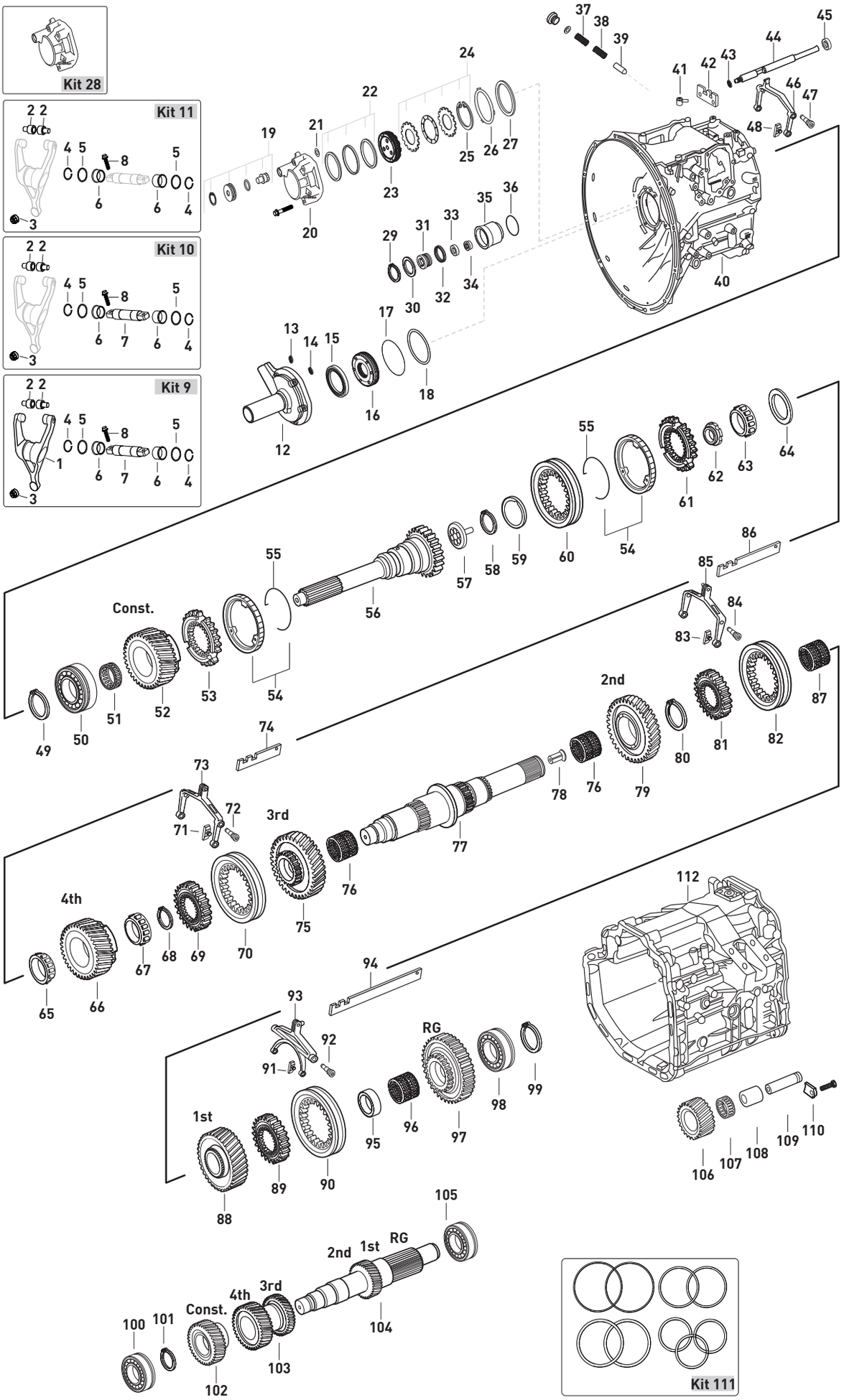




Original parts names, oem numbers, symbols and descriptions used in this catalogue are for reference purposes only.

| Fig. | Kacmaz No | Oem No | Oem Old No | Pcs. | Ürün Tanımı | Description | Sizes | Not | 715515 | 715519 | 715535 |
|---|---|---|---|---|---|---|---|---|---|---|---|
| 68 | K21.04342 | 007 994 0041 | (387 262 2273) | 1 | 3./4.VİTES YILDIZ DİŞLİ SEKMANI | RETAINING RING | 2,50mm | | ♦ | ♦ | ♦ |
| 68 | K21.04359 | 387 262 2373 | | 1 | 3./4.VİTES YILDIZ DİŞLİ SEKMANI | RETAINING RING | 2,55mm | | ♦ | ♦ | ♦ |
| 68 | K21.04345 | 387 262 2473 | | 1 | 3./4.VİTES YILDIZ DİŞLİ SEKMANI | RETAINING RING | 2,60mm | | ♦ | ♦ | ♦ |
| 68 | K21.07021 | 387 262 2573 | | 1 | 3./4.VİTES YILDIZ DİŞLİ SEKMANI | RETAINING RING | 2,65mm | | ♦ | ♦ | ♦ |
| 68 | K21.04344 | 387 262 7973 | | 1 | 3./4.VİTES YILDIZ DİŞLİ SEKMANI | RETAINING RING | 2,70mm | | ♦ | ♦ | ♦ |
| 68 | K21.07022 | 387 262 8073 | | 1 | 3./4.VİTES YILDIZ DİŞLİ SEKMANI | RETAINING RING | 2,75mm | | ♦ | ♦ | ♦ |
| 68 | K21.06588 | 387 262 8173 | | 1 | 3./4.VİTES YILDIZ DİŞLİ SEKMANI | RETAINING RING | 2,80mm | | ♦ | ♦ | ♦ |
| 69 | K21.03581 | 960 262 3135 | (945 262 3635) | 1 | 3./4.VİTES YILDIZ DİŞLİ | SYNCHRONIZER HUB | | | ♦ | ♦ | ♦ |
| | | | (960 262 2235) | | | | | | | | |
| | | | (930 262 0835) | | | | | | | | |
| 70 | K21.03582 | 960 262 1523 | (930 262 0123) | 1 | 3./4.VİTES HALKASI | ENGAGING SLEEVE | | | ♦ | ♦ | ♦ |
| | | | (930 262 0723) | | | | | | | | |
| | | | (945 262 5223) | | | | | | | | |
| 71 | K21.03565 | 947 265 0449 | | 2 | 3./4.VİTES HİLAL PABUCU | SLIDING PAD | | | ♦ | ♦ | ♦ |
| 72 | K21.04307 | 960 265 0774 | (945 265 1274) | 2 | HİLAL CİVATASI | PIN | | | ♦ | ♦ | ♦ |
| | | | (945 265 2974) | | | | | | | | |
| | | | (945 265 2774) | | | | | | | | |
| 73 | | 930 260 0130 | | 1 | 3./4.VİTES HİLALİ | GEAR SHIFT FORK 3rd/4th | | | ♦ | ♦ | ♦ |
| 74 | | 945 265 3204 | (945 265 0404) | 1 | 3./4.VİTES HİLAL ÇITASI | SHIFTING ROD 3rd/4th | | | ♦ | ♦ | ♦ |
| 75 | K21.06275 | 930 262 0613 | (930 262 0413) | 1 | 3.VİTES DİŞLİSİ 34 DİŞ | GEAR 3rd 34 T | | | ♦ | ♦ | ♦ |
| | | | (945 262 9713) | | | | | | | | |
| | | | (945 262 9613) | | | | | | | | |
| 76 | K21.03810 | 018 981 6610 | (010 981 5310) | 2 | 2./3.VİTES MASURA BİLYA | NEEDLE CAGE | 85X93X53mm | | ♦ | ♦ | ♦ |
| 77 | K21.06358 | 930 262 1005 | | 1 | KAMALI MİL | MAIN SHAFT | | (1) | ♦ | ♦ | ♦ |
| 77 | K21.06264 | 930 262 0605 | (930 262 0305) | 1 | KAMALI MİL | MAIN SHAFT | | (2) | ♦ | ♦ | ♦ |
| 78 | K21.04364 | 001 990 2759 | | 1 | KAMALI MİL YAĞ BORUSU | OIL PIPE | | | ♦ | ♦ | ♦ |
| 79 | K21.06043 | 945 262 6812 | | 1 | 2.VİTES DİŞLİSİ 39 DİŞ | GEAR 2nd 39 T. | | | ♦ | ♦ | ♦ |
| 80 | K21.04343 | 387 262 2073 | | 1 | 1./2.VİTES YILDIZ DİŞLİ SEKMANI | RETAINING RING | 2,40mm | | ♦ | ♦ | ♦ |
| 80 | K21.06687 | 387 262 2173 | | 1 | 1./2.VİTES YILDIZ DİŞLİ SEKMANI | RETAINING RING | 2,45mm | | ♦ | ♦ | ♦ |
| 80 | K21.04342 | 007 994 0041 | (387 262 2273) | 1 | 1./2.VİTES YILDIZ DİŞLİ SEKMANI | RETAINING RING | 2,50mm | | ♦ | ♦ | ♦ |
| 80 | K21.04359 | 387 262 2373 | | 1 | 1./2.VİTES YILDIZ DİŞLİ SEKMANI | RETAINING RING | 2,55mm | | ♦ | ♦ | ♦ |
| 80 | K21.04345 | 387 262 2473 | | 1 | 1./2.VİTES YILDIZ DİŞLİ SEKMANI | RETAINING RING | 2,60mm | | ♦ | ♦ | ♦ |
| 80 | K21.07021 | 387 262 2573 | | 1 | 1./2.VİTES YILDIZ DİŞLİ SEKMANI | RETAINING RING | 2,65mm | | ♦ | ♦ | ♦ |
| 80 | K21.04344 | 387 262 7973 | | 1 | 1./2.VİTES YILDIZ DİŞLİ SEKMANI | RETAINING RING | 2,70mm | | ♦ | ♦ | ♦ |
| 80 | K21.07022 | 387 262 8073 | | 1 | 1./2.VİTES YILDIZ DİŞLİ SEKMANI | RETAINING RING | 2,75mm | | ♦ | ♦ | ♦ |
| 80 | K21.06588 | 387 262 8173 | | 1 | 1./2.VİTES YILDIZ DİŞLİ SEKMANI | RETAINING RING | 2,80mm | | ♦ | ♦ | ♦ |
| 81 | K21.03581 | 960 262 3135 | (945 262 3635) | 1 | 1./2.VİTES YILDIZ DİŞLİ | SYNCHRONIZER HUB | | | ♦ | ♦ | ♦ |
| | | | (960 262 2235) | | | | | | | | |
| | | | (930 262 0835) | | | | | | | | |
| 82 | K21.03582 | 960 262 1523 | (930 262 0123) | 1 | 1./2.VİTES HALKASI | ENGAGING SLEEVE | | | ♦ | ♦ | ♦ |
| | | | (930 262 0723) | | | | | | | | |
| | | | (945 262 5223) | | | | | | | | |
| 83 | K21.03565 | 947 265 0449 | | 2 | 1./2.VİTES HİLAL PABUCU | SLIDING PAD | | | ♦ | ♦ | ♦ |
| 84 | K21.04307 | 960 265 0774 | (945 265 1274) | 2 | HİLAL CİVATASI | PIN | | | ♦ | ♦ | ♦ |
| | | | (945 265 2974) | | | | | | | | |
| | | | (945 265 2774) | | | | | | | | |
| 85 | | 930 260 0030 | | 1 | 1./2.VİTES HİLALİ | GEAR SHIFT FORK 1st/2nd | | | ♦ | ♦ | ♦ |
| 86 | | 945 265 3304 | (945 265 1904) | 1 | 1./2.VİTES HİLAL ÇITASI | SHIFTING ROD 1st/2nd | | | ♦ | ♦ | ♦ |
| | | | (945 265 1704) | | | | | | | | |
| 87 | K21.03839 | 945 981 0010 | (018 981 8110) | 1 | 1.VİTES MASURA BİLYA | NEEDLE CAGE | 75X83X48mm | | ♦ | ♦ | ♦ |
| | | | (018 981 7610) | | | | | | | | |
| 88 | K21.06240 | 930 262 1111 | (930 262 1211) | 1 | 1.VİTES DİŞLİSİ 44 DİŞ | GEAR 1st 44 T | | | ♦ | ♦ | ♦ |
| | | | (930 262 0611) | | | | | | | | |
| | | | (930 262 0211) | | | | | | | | |
| | | | (930 262 0111) | | | | | | | | |
| 89 | K21.03164 | 389 262 3935 | | 1 | GERİ VİTES YILDIZ DİŞLİ | SYNCHRONIZER HUB | | (A) | ♦ | ♦ | ♦ |
| 89 | K21.03163 | 945 262 3835 | | 1 | GERİ VİTES YILDIZ DİŞLİ | SYNCHRONIZER HUB | | (B) | ♦ | ♦ | ♦ |

NOTES :

NOTLAR :





Original parts names, oem numbers, symbols and descriptions used in this catalogue are for reference purposes only.

# GEARBOX G 241-16 KL / 17,00 - 1,00

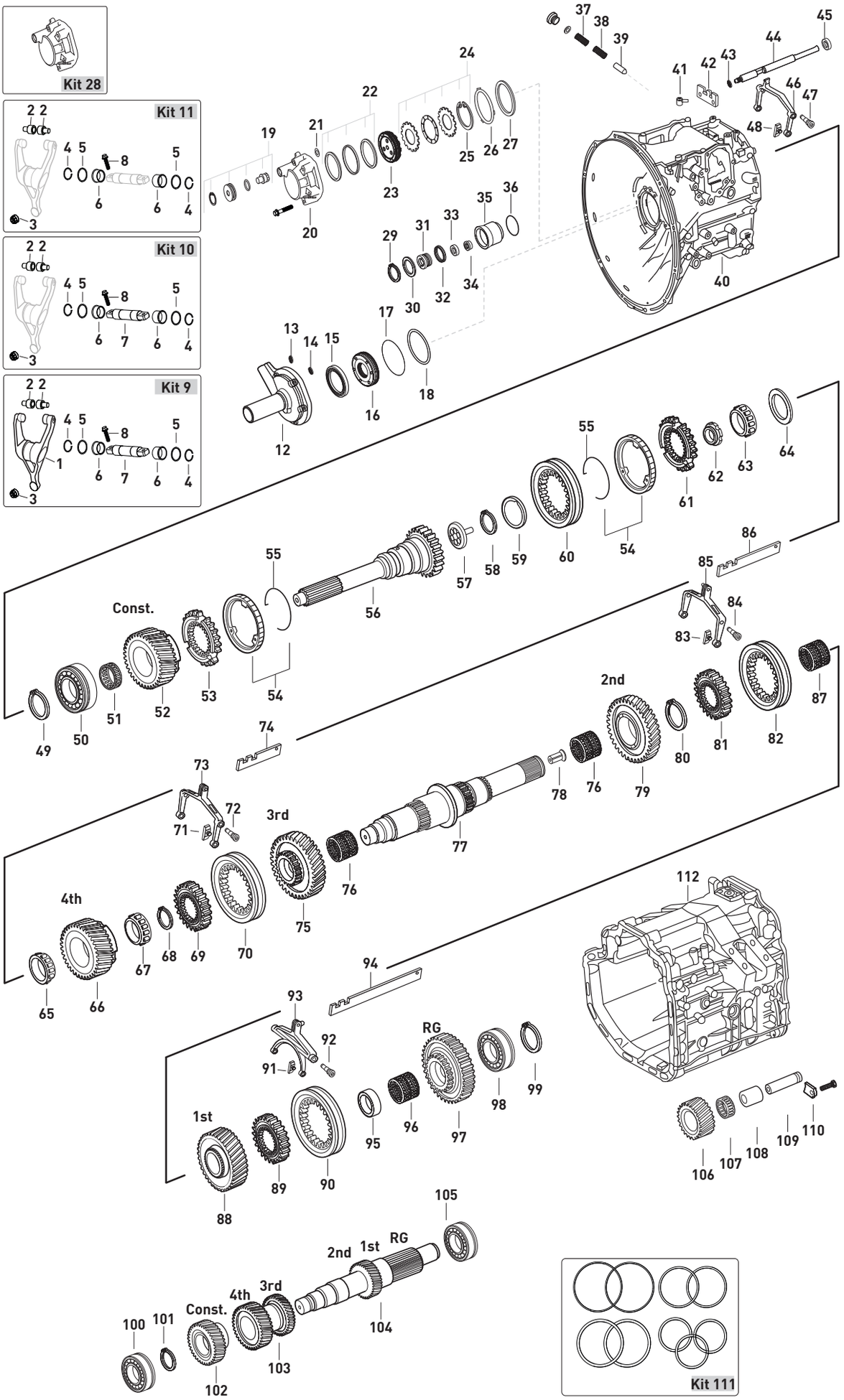




Original parts names, oem numbers, symbols and descriptions used in this catalogue are for reference purposes only.

| Fig. | Kacmaz No | Oem No | Oem Old No | Pcs. | Ürün Tanımı | Description | Sizes | Not | 715515 | 715519 | 715535 |
|---|---|---|---|---|---|---|---|---|---|---|---|
| 89 | K21.06995 | 945 262 3935 | | 1 | GERİ VİTES YILDIZ DİŞLİ | SYNCHRONIZER HUB | | (C) | ♦ | ♦ | ♦ |
| 90 | K21.03061 | 389 262 1823 | (389 262 0923) | 1 | GERİ VİTES HALKASI | ENGAGING SLEEVE | | | ♦ | ♦ | ♦ |
| 91 | K21.03410 | 947 265 0249 | (945 265 0149) | 2 | GERİ VİTES HİLAL PABUCU | SLIDING PAD | | | ♦ | ♦ | ♦ |
| 92 | K21.04307 | 960 265 0774 | (945 265 1274) | 2 | HİLAL CİVATASI | PIN | | | ♦ | ♦ | ♦ |
| | | | (945 265 2974) | | | | | | | | |
| | | | (945 265 2774) | | | | | | | | |
| 93 | K21.06259 | 945 260 0430 | (945 265 0003) | 1 | GERİ VİTES HİLALİ | SHIFTING FORK RG | | | ♦ | ♦ | ♦ |
| 94 | | 945 265 1104 | (945 265 0204) | 1 | GERİ VİTES HİLAL ÇITASI | SHIFTING ROD RG | | | ♦ | ♦ | ♦ |
| 95 | K21.03112 | 389 262 2550 | (389 262 1650) | 1 | GERİ VİTES MASURA BİLYA ÇANAĞI | BEARING RACE | | (A)(B)(2) | ♦ | ♦ | ♦ |
| | | | (389 262 0050) | | | | | | | | |
| 95 | K21.03065 | 389 262 0150 | | 1 | GERİ VİTES MASURA BİLYA ÇANAĞI | BEARING RACE | | (C)(1) | ♦ | ♦ | ♦ |
| 96 | K21.03803 | 009 981 1510 | (017 981 7810) | 1 | GERİ VİTES MASURA BİLYA | NEEDLE CAGE | 78X86X35mm | (A)(B)(2) | ♦ | ♦ | ♦ |
| | | | (008 981 9310) | | | | | | | | |
| | | | (012 981 9110) | | | | | | | | |
| 96 | K21.03813 | 013 981 1810 | (013 981 2610) | 1 | GERİ VİTES MASURA BİLYA | NEEDLE CAGE | 78X86X33mm | (C)(1) | ♦ | ♦ | ♦ |
| | | | (013 981 1710) | | | | | | | | |
| 97 | K21.03168 | 945 262 3333 | (389 262 2133) | 1 | GERİ VİTES DİŞLİSİ 40 DİŞ | REVERSE GEAR 40 T. | | (A)(2) | ♦ | ♦ | ♦ |
| 97 | K21.03167 | 945 262 4433 | | 1 | GERİ VİTES DİŞLİSİ 40 DİŞ | REVERSE GEAR 40 T. | | (B)(2) | ♦ | ♦ | ♦ |
| 97 | K21.06044 | 960 262 0033 | | 1 | GERİ VİTES DİŞLİSİ 40 DİŞ | REVERSE GEAR 40 T. | | (C)(1) | ♦ | ♦ | ♦ |
| 98 | K21.03661 | 002 981 8181 | | 1 | KAMALI MİL ARKA BİLYA | ROLLER BEARING | 60X130X35,2mm | (1) | ♦ | ♦ | ♦ |
| 98 | K21.03623 | 014 981 6105 | (016 981 1305) | 1 | KAMALI MİL ARKA BİLYA | ROLLER BEARING | 60X130X33,2mm | (2) | ♦ | ♦ | ♦ |
| | | | (014 981 7505) | | | | | | | | |
| 99 | K21.04331 | 007 994 1841 | (006 994 9941) | 1 | KAMALI MİL ARKA BİLYA SEKMANI | RETAINING RING | 2,50mm | | ♦ | ♦ | ♦ |
| 100 | K21.03606 | 015 981 9005 | (014 981 1405) | 1 | GRUP MİLİ ÖN BİLYA | ROLLER BEARING | 50,8X100X35mm | | ♦ | ♦ | ♦ |
| | | | (012 981 7405) | | | | | | | | |
| | | | (012 981 5105) | | | | | | | | |
| 101 | K21.06425 | 389 994 0041 | | 1 | GRUP MİLİ ÖN BİLYA SEKMANI | RETAINING RING | 2,50mm | | ♦ | ♦ | ♦ |
| 102 | K21.06319 | 930 263 2510 | (930 263 0110) | 1 | TAKVİYE DİŞLİ KARŞILIĞI 38 DİŞ | CONSTANT GEAR 38 T. | | | ♦ | ♦ | ♦ |
| | | | (930 263 0210) | | | | | | | | |
| 103 | K21.06321 | 947 263 1613 | (945 263 5613) | 1 | TAK.VE 4.VİT.KARŞILIĞI 27/34 DİŞ | DOUBLE GEAR 27/34 T. | | | ♦ | ♦ | ♦ |
| | | | (945 263 5513) | | | | | | | | |
| | | | (945 263 5413) | | | | | | | | |
| 104 | K21.06322 | 930 263 0602 | | 1 | GRUP MİLİ 16/21 DİŞ | COUNTER SHAFT 16 T/21 T. | | | ♦ | ♦ | ♦ |
| 104 | K21.06323 | 930 263 0202 | | 1 | GRUP MİLİ 16/21 DİŞ | COUNTER SHAFT 16 T/21 T. | | | ♦ | ♦ | ♦ |
| 105 | K21.03624 | 016 981 1205 | (012 981 9405) | 1 | GRUP MİLİ ARKA BİLYA | ROLLER BEARING | 60X130X33,8mm | | ♦ | ♦ | ♦ |
| | | | (012 981 9205) | | | | | | | | |
| 106 | K21.06048 | 389 263 1031 | | 1 | KÜÇÜK GERİ VİTES DİŞLİSİ 21 DİŞ | REVERSE IDLER GEAR 21 T. | | | ♦ | ♦ | ♦ |
| 107 | K21.03838 | 012 981 8910 | (012 981 9010) | 1 | KÜÇÜK GERİ VİTES MASURA BİLYA | NEEDLE CAGE | 42X50X51mm | | ♦ | ♦ | ♦ |
| | | | (019 981 1310) | | | | | | | | |
| 108 | K21.06031 | 389 263 0850 | | 1 | K.GERİ VİTES MASURA BİLYA ÇANAĞI | BUSHING | 18mm | | ♦ | ♦ | ♦ |
| 109 | K21.06037 | 976 263 0030 | (976 263 1230) | 1 | KÜÇÜK GERİ VİTES PİMİ | PIN | | | ♦ | ♦ | ♦ |
| 110 | K21.07010 | 945 263 0041 | | 1 | K.GERİ VİTES PİM KİLİTLEMESİ | KEY | | | ♦ | ♦ | ♦ |
| 111 | K21.04317 | | | Kit | RAYNEL TAKIMI | WASHER KIT | | | ♦ | ♦ | ♦ |
| 112 | | 930 260 2811 | (945 261 4826) | 1 | ŞANZIMAN ORTA GÖVDE | HOUSING | | | ♦ | | |
| 112 | | 930 260 2511 | (945 260 8111) | 1 | ŞANZIMAN ORTA GÖVDE | HOUSING | | | ♦ | ♦ | ♦ |
| | | | (945 260 9911) | | | | | | | | |
| | | | (945 261 5026) | | | | | | | | |

NOTES :

NOTLAR :





Original parts names, oem numbers, symbols and descriptions used in this catalogue are for reference purposes only.

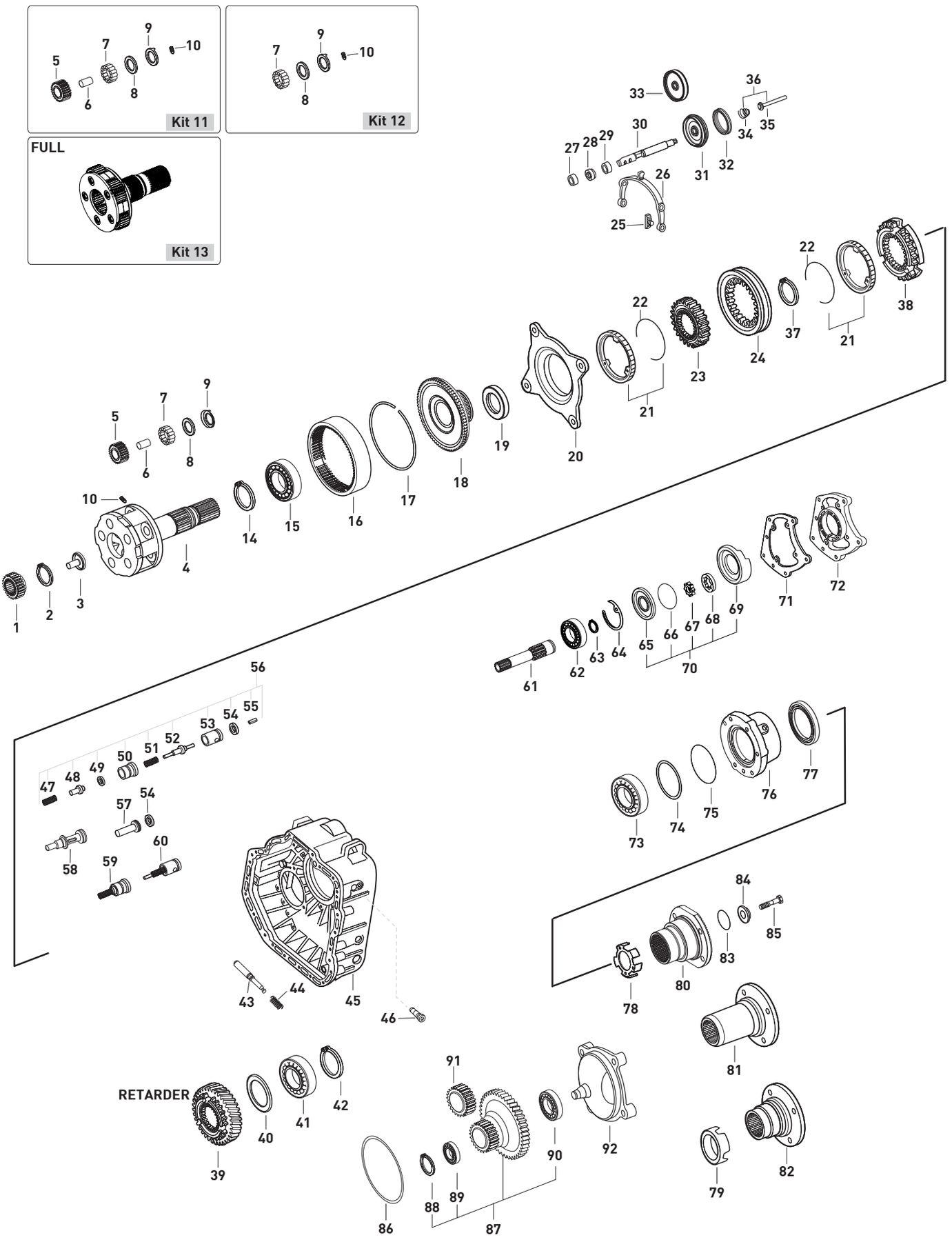




Original parts names, oem numbers, symbols and descriptions used in this catalogue are for reference purposes only.

| Fig. | Kacmaz No | Oem No | Oem Old No | Pcs. | Ürün Tanımı | Description | Sizes | Not | 715515 | 715519 | 715535 |
|---|---|---|---|---|---|---|---|---|---|---|---|
| 1 | K21.03169 | 945 262 0909 | (389 262 0809) | 1 | GÜNEŞ DİŞLİ 25 DİŞ | SUN GEAR 25 T. | | | ♦ | ♦ | ♦ |
| | | | (389 262 0909) | | | | | | | | |
| 2 | K21.04115 | 000472 060000 | | 1 | HEYKEL YAĞ PİPET SEKMANI | SNAP RING | 2,00mm | | ♦ | ♦ | ♦ |
| 3 | K21.03435 | 945 269 0834 | (389 269 4734) | 1 | ŞANZIMAN HEYKELİ YAĞ PİPETİ | OIL TUBE | | | ♦ | ♦ | ♦ |
| 4 | K21.03180 | 946 260 3561 | (946 260 3661) | 1 | ŞANZIMAN HEYKELİ (BOŞ) | PLANETARY CARRIER (EMPTY) | | | ♦ | ♦ | ♦ |
| | | | (945 260 4561) | | | | | | | | |
| | | | (945 260 4461) | | | | | | | | |
| 5 | K21.03436 | 945 262 0006 | | 5 | HEYKEL KOZA DİŞLİSİ 28 DİŞ | PLANETARY GEAR 28 T. | | | ♦ | ♦ | ♦ |
| 6 | K21.03437 | 389 262 0407 | | 5 | HEYKEL KOZA DİŞLİ PİMİ | PLANETARY GEAR PIN | | | ♦ | ♦ | ♦ |
| 7 | K21.03816 | 000 981 4186 | (000 981 4386) | 125 | HEYKEL KOZA DİŞLİ TANE BİLYA | NEEDLE ROLLER | D5X39,6 | | ♦ | ♦ | ♦ |
| 8 | K21.04074 | 389 262 0162 | (389 262 6462) | 10 | HEYKEL KOZA DİŞLİ PULU | THRUST WASHER | | | ♦ | ♦ | ♦ |
| | | | (389 262 0562) | | | | | | | | |
| 9 | K21.04075 | 945 262 1162 | (945 262 0162) | 10 | HEYKEL KOZA DİŞLİ PULU | THRUST WASHER | | | ♦ | ♦ | ♦ |
| | | | (389 262 1462) | | | | | | | | |
| 10 | K21.03418 | 000914 006109 | | 5 | HEYKEL KOZA DİŞLİ VİDASI | THREADED PIN | M6X14 | | ♦ | ♦ | ♦ |
| 11 | K21.03178 | 946 260 0097 | (655 260 0197) | Kit | HEYKEL KOZA DİŞLİ TAKIMI | PLANETARY GEAR SET | | | ♦ | ♦ | ♦ |
| 12 | K21.03663 | | | Kit | HEYKEL BİLYA VE PUL TAKIMI | WASHER KIT | | | ♦ | ♦ | ♦ |
| 13 | K21.06313 | 945 260 4661 | | Kit | ŞANZIMAN HEYKELİ (DOLU) | PLANETARY CARRIER (FULL) | | | ♦ | ♦ | ♦ |
| 14 | K21.06864 | 000472 130000 | | 1 | ÇEMBER DİŞLİ BİLYA SEKMANI | RETAINING RING | 130X4mm | | ♦ | ♦ | ♦ |
| 15 | K21.03614 | 008 981 1325 | (004 981 8725) | 1 | ÇEMBER DİŞLİ BİLYASI | ROLLER BEARING | 90X130X14mm | | ♦ | ♦ | ♦ |
| | | | (004 981 8825) | | | | | | | | |
| | | | (004 981 9425) | | | | | | | | |
| 16 | K21.03449 | 945 262 1208 | (945 262 0808) | 1 | ÇEMBER DİŞLİ 85 DİŞ | RING WHEEL 85 T. | | | ♦ | ♦ | ♦ |
| 17 | K21.04253 | 389 262 0773 | | 1 | ÇEMBER DİŞLİ SEKMANI | LOCK RING | | | ♦ | ♦ | ♦ |
| 18 | K21.03442 | 930 262 0125 | (389 262 1425) | 1 | PLANET ÇAN DİŞLİ 85 DİŞ | CARRIER HUB 85 T. | | | ♦ | ♦ | ♦ |
| 19 | K21.04076 | 389 262 0251 | | 1 | ŞANZIMAN HEYKELİ ARA PULU | SPACER RING | | | ♦ | ♦ | ♦ |
| 20 | K21.03037 | 947 260 3036 | (947 260 0836) | 1 | TABLA SENKROMENÇ | FOLLOWER RING | | | ♦ | ♦ | ♦ |
| 21 | K21.03185 | 947 260 0945 | | 2 | AĞIR SERİ FRENLEME (Mo) | SYNCHRONIZING CONE / Mo | | | ♦ | ♦ | ♦ |
| 21 | K21.06273 | 947 260 3045 | | 2 | AĞIR SERİ FRENLEME (C) | SYNCHRONIZING CONE / C | | | ♦ | ♦ | ♦ |
| 22 | K21.03077 | 389 262 0293 | | 2 | FRENLEME TELİ | SPRING | | | ♦ | ♦ | ♦ |
| 23 | K21.03079 | 389 262 4935 | (389 262 2035) | 1 | AĞIR SERİ YILDIZ DİŞLİ 73 DİŞ | SYNCHRONIZER HUB 73 T. | | | ♦ | ♦ | ♦ |
| | | | (400 262 0335) | | | | | | | | |
| 24 | K21.03033 | 945 262 6923 | (930 262 0623) | 1 | AĞIR SERİ HALKA | ENGAGING SLEEVE | | | ♦ | ♦ | ♦ |
| 25 | K21.03431 | 960 265 0049 | (947 265 0349) | 2 | AĞIR SERİ HİLAL PABUCU | SLIDING PAD | | | ♦ | ♦ | ♦ |
| | | | (389 265 2749) | | | | | | | | |
| 26 | K21.06324 | 947 265 1901 | (947 265 0901) | 1 | AĞIR SERİ HİLALİ | SHIFTING FORK | | | ♦ | ♦ | ♦ |
| 27 | K21.04254 | 000 992 7703 | (389 267 2250) | 1 | AĞIR SERİ HİLAL MİL BURCU | BUSHING | 21X25X20mm | | ♦ | ♦ | ♦ |
| 28 | K21.03523 | 000 267 0197 | (000 267 0397) | 1 | AĞIR SERİ HİLAL MİL KEÇESİ | OIL SEAL | 22X32X8mm | | ♦ | ♦ | ♦ |
| 29 | K21.04178 | 387 267 0650 | (387 267 0250) | 1 | AĞIR SERİ HİLAL MİL BURCU | BUSHING | 34x22x8mm | | ♦ | ♦ | ♦ |
| 30 | K21.06492 | 930 267 0217 | (945 267 2217) | 1 | AĞIR SERİ HİLAL MİLİ | SHIFTING ROD | | | ♦ | ♦ | ♦ |
| 30 | | 945 267 2117 | (389 267 7317) | 1 | AĞIR SERİ HİLAL MİLİ | SHIFTING ROD | | | ♦ | ♦ | |
| 30 | | 389 267 3517 | | 1 | AĞIR SERİ HİLAL MİLİ | SHIFTING ROD | | | ♦ | | |
| 31 | K21.06499 | 930 267 0618 | | 1 | AĞIR SERİ HİLAL MİL PİSTONU | PISTON | | | ♦ | ♦ | ♦ |
| 32 | K21.03525 | 024 997 8347 | (020 997 6747) | 1 | AĞIR SERİ SİLİNDİR KEÇESİ | SEAL RING | 77X90X17mm | | ♦ | ♦ | ♦ |
| | | | (014 997 3647) | | | | | | | | |
| | | | (014 997 5147) | | | | | | | | |
| 33 | K21.06497 | 960 267 0118 | | 1 | AĞIR SERİ HİLAL MİL PİSTONU | PISTON | tire sticked | | ♦ | ♦ | ♦ |
| 34 | K21.04255 | 008 993 0801 | (000 993 6705) | 1 | OKUYUCU MİL YAYI | SPRING | 9,7x7,7x8,1mm | | ♦ | ♦ | ♦ |
| 35 | K21.04257 | 000 543 5785 | | 1 | OKUYUCU MİLİ | MAGNETIC PISTON | | | ♦ | ♦ | ♦ |
| 36 | K21.07049 | 960 543 0285 | | Kit | OKUYUCU MİL-YAY TAKIMI | REPAIR KIT | | | ♦ | ♦ | ♦ |
| 37 | K21.04356 | 000471 120000 | | 1 | AĞIR SERİ YILDIZ DİŞLİ SEKMANI | RETAINING RING | | | ♦ | ♦ | ♦ |
| 38 | K21.03186 | 945 262 3834 | | 1 | SERİ SENKROMENÇ | ENGAGING RING | | | ♦ | ♦ | ♦ |
| 39 | K21.03188 | 930 264 0320 | | 1 | RETARDER DİŞLİSİ 64 DİŞ | RETARDER GEAR 64 T. | | | ♦ | ♦ | ♦ |
| 39 | K21.06058 | 930 264 0420 | | 1 | RETARDER DİŞLİSİ 59 DİŞ | RETARDER GEAR 59 T. | | | ♦ | | |
| 40 | | 387 264 0064 | | 1 | YAĞ TOPLAMA SACI | OIL BAFFLE | | | ♦ | | |

NOTES :
Parts encoded alphabetic and numaric are used together.

NOTLAR :
Alfabetik ve rakam ile kodlanan parçalar birlikte kullanılır.





Original parts names, oem numbers, symbols and descriptions used in this catalogue are for reference purposes only.

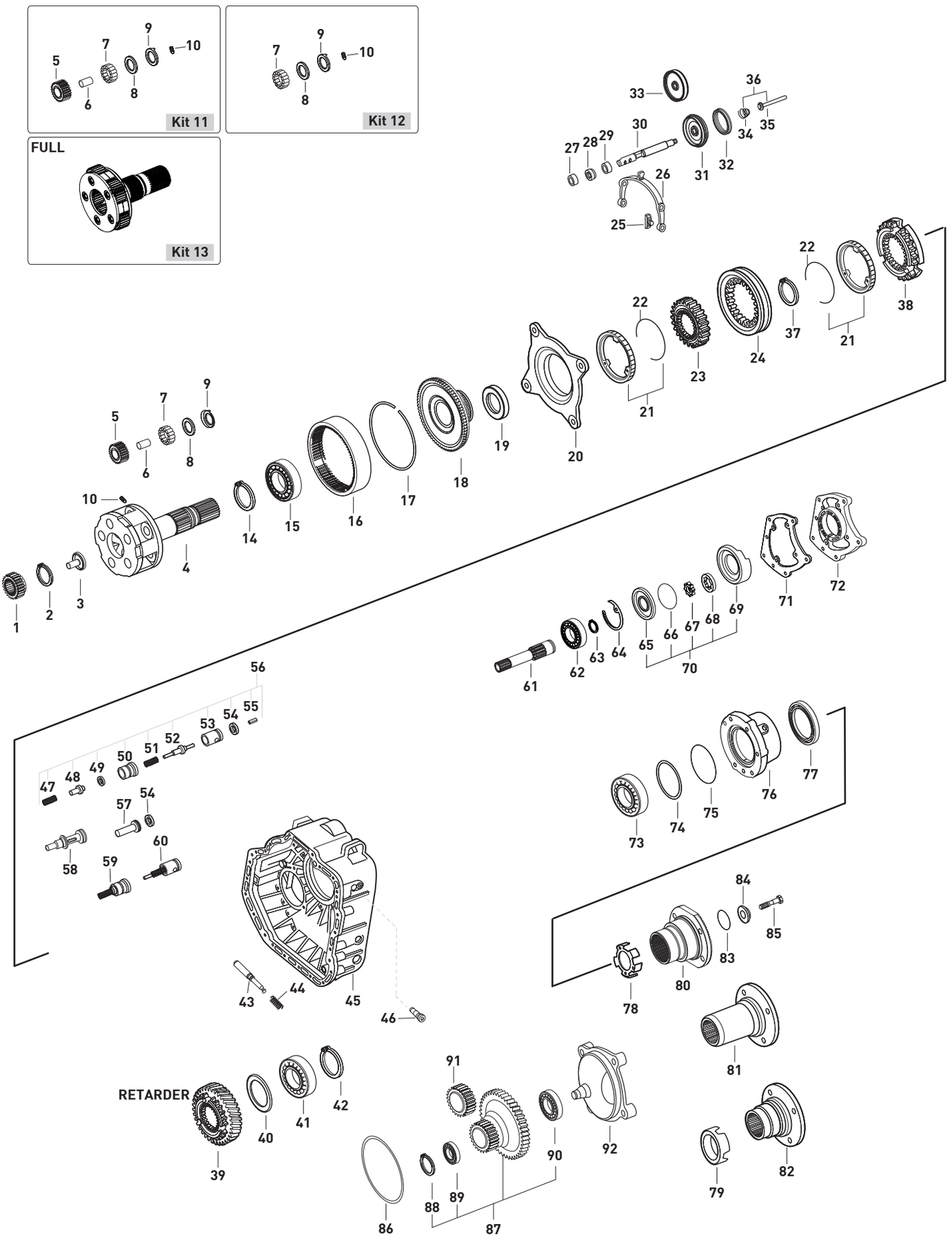






Original parts names, oem numbers, symbols and descriptions used in this catalogue are for reference purposes only.

| Fig. | Kacmaz No | Oem No | Oem Old No | Pcs. | Ürün Tanımı | Description | Sizes | Not | 715515 | 715519 | 715535 |
|---|---|---|---|---|---|---|---|---|---|---|---|
| 41 | | 007 981 8201 | (007 981 8701) | 1 | ŞANZIMAN HEYKEL BİLYASI | BEARING | 103X140X26mm | | ♦ | | |
| 42 | | 000472 140000 | | 1 | HEYKEL BİLYA SEKMANI | LOCK RING | 140X4mm | | ♦ | | |
| 43 | K21.06004 | 945 267 0274 | (389 267 0274) | 1 | AĞIR SERİ KİLİTLEME MİLİ | PIN | | | ♦ | ♦ | ♦ |
| 44 | K21.06006 | 389 993 3401 | (389 993 0601) | 1 | AĞIR SERİ KİLİTLEME YAYI | SPRING | | | ♦ | ♦ | ♦ |
| 45 | | 945 260 6812 | (945 261 4526) | 1 | ŞANZIMAN ARKA GÖVDE | HOUSING | | | ♦ | ♦ | ♦ |
| 45 | | 945 260 6912 | (945 261 4326) | 1 | ŞANZIMAN ARKA GÖVDE | HOUSING | | | ♦ | | ♦ |
| 45 | | 930 260 6011 | (930 260 1511) | 1 | ŞANZIMAN ARKA GÖVDE | HOUSING | RETARDER | | ♦ | | |
| | | | (930 260 2411) | | | | | | | | |
| 46 | K21.04307 | 960 265 0774 | (945 265 1274) | 2 | HİLAL CİVATASI | PIN | | | ♦ | ♦ | ♦ |
| | | | (945 265 2974) | | | | | | | | |
| | | | (945 265 2774) | | | | | | | | |
| 47 | | 389 993 5301 | | 1 | YAĞ BASINÇ YAYI | SPRING | | | ♦ | ♦ | |
| 48 | | 389 269 1026 | (389 269 0926) | 1 | YAĞ BASINÇ VALFİ | SELECTOR VALVE | | | ♦ | ♦ | |
| 49 | K21.04210 | 013 997 0148 | (020 997 8348) | 1 | YAĞ BASINÇ ORİNGİ | O-RING | 13,3X2,4mm | | ♦ | ♦ | |
| 50 | | 389 269 1444 | (389 269 0744) | 1 | YAĞ BASINÇ VALF GÖVDESİ | VALVE INSERT | | | ♦ | ♦ | |
| 51 | | 389 993 4401 | | 1 | YAĞ BASINÇ VALF MİL YAYI | SPRING | | | ♦ | ♦ | |
| 52 | | 389 269 0826 | | 1 | YAĞ BASINÇ VALF MİLİ | SELECTOR VALVE | | | ♦ | ♦ | |
| 53 | | 389 269 0844 | | 1 | YAĞ BASINÇ VALF TOPU | BALL | | | ♦ | ♦ | |
| 54 | K21.04212 | 013 997 0048 | (020 997 8248) | 1 | YAĞ BASINÇ VALF ORİNGİ | O-RING | 19,2X3mm | | ♦ | ♦ | |
| 55 | | 001481 004001 | (001481 004049) | 1 | EMNİYET PİMİ | CLAMPING SLEEVE | | | ♦ | ♦ | |
| 56 | K21.06962 | 655 260 0157 | | Kit | YAĞ BASINÇ VALFİ KOMPLE | VALVE KIT | | | ♦ | ♦ | |
| 57 | K21.06979 | 389 265 0176 | (389 265 0076) | 1 | YAĞ BASINÇ VALFİ ALIN FİBERİ | WASHER | | | ♦ | | |
| 58 | | 960 260 3257 | (960 260 1157) | 1 | YAĞ BASINÇ VALFİ ALIN FİBERİ | WASHER | | | ♦ | | |
| 59 | K21.06953 | 960 260 1057 | | Kit | YAĞ BASINÇ VALFİ KOMPLE | VALVE KIT | | | ♦ | ♦ | ♦ |
| 59 | K21.06988 | 960 260 2257 | | Kit | YAĞ BASINÇ VALFİ KOMPLE | VALVE KIT | | | ♦ | ♦ | ♦ |
| 60 | K21.06973 | 960 260 1257 | | Kit | YAĞ BASINÇ VALFİ KOMPLE | VALVE KIT | | | ♦ | ♦ | ♦ |
| 61 | K21.03198 | 947 269 1010 | (945 269 1010) | 1 | YAĞ POMPA MİLİ | OIL PUMP SHAFT | | | ♦ | ♦ | ♦ |
| 61 | K21.06298 | 947 269 1110 | (945 269 1110) | 1 | YAĞ POMPA MİLİ | OIL PUMP SHAFT | | | ♦ | ♦ | ♦ |
| 62 | K21.03648 | 010 981 9025 | (010 981 8425) | 1 | PTO MİL BİLYASI | ROLLLER BEARING | 17X35X10mm | | ♦ | ♦ | ♦ |
| | | | (008 981 5425) | | | | | | | | |
| | | | (008 981 3425) | | | | | | | | |
| | | | (400 981 2525) | | | | | | | | |
| 63 | | 912009 045100 | | 1 | PTO MİL BİLYA SEKMANI | RETAINING RING | | | ♦ | ♦ | ♦ |
| 64 | K21.94304 | | | 1 | YAĞ POMPA PULU | SPACER WASHER | 0,70mm | | ♦ | ♦ | ♦ |
| 64 | K21.04304 | 389 262 6254 | | 1 | YAĞ POMPA PULU | SPACER WASHER | 0,80mm | | ♦ | ♦ | ♦ |
| 64 | K21.04303 | 389 262 5954 | | 1 | YAĞ POMPA PULU | SPACER WASHER | 0,90mm | | ♦ | ♦ | ♦ |
| 64 | K21.04302 | 389 262 5754 | | 1 | YAĞ POMPA PULU | SPACER WASHER | 1,00mm | | ♦ | ♦ | ♦ |
| 64 | K21.04301 | 389 262 5554 | | 1 | YAĞ POMPA PULU | SPACER WASHER | 1,10mm | | ♦ | ♦ | ♦ |
| 64 | K21.04305 | 389 262 5354 | | 1 | YAĞ POMPA PULU | SPACER WASHER | 1,20mm | | ♦ | ♦ | ♦ |
| 65 | K21.03412 | 945 269 0201 | (389 269 2501) | 1 | YAĞ POMPA KAPAĞI | OIL PUMP COVER | | | ♦ | ♦ | ♦ |
| 66 | K21.03511 | 029 997 5748 | | 1 | YAĞ POMPA ORİNGİ | O-RING | 112X2,5mm | | ♦ | ♦ | ♦ |
| 67 | K21.03413 | 389 269 1406 | (389 269 1506) | 1 | YAĞ POMPA İÇ ROTOR | OIL PUMP GEAR | | | ♦ | ♦ | ♦ |
| | | | (945 260 0090) | | | | | | | | |
| 68 | K21.03414 | 389 269 0706 | (389 269 1206) | 1 | YAĞ POMPA DIŞ ROTOR | ROTOR | | | ♦ | ♦ | ♦ |
| 69 | K21.03478 | 947 269 1001 | | 1 | YAĞ POMPA GÖVDESİ | OIL PUMP HOUSING | | | ♦ | ♦ | ♦ |
| 70 | K21.03475 | 389 260 0790 | | 1 | YAĞ POMPASI | OIL PUMP | | | ♦ | ♦ | ♦ |
| 71 | K21.03667 | 945 261 0680 | (945 261 0580) | 1 | PTO KAPAK CONTASI | GASKET | | | ♦ | ♦ | ♦ |
| | | | (945 261 0080) | | | | | | | | |
| 72 | K21.03566 | 945 261 1033 | (945 261 1433) | 1 | PTO KAPAĞI | COVER | | | ♦ | ♦ | ♦ |
| | | | (400 261 1133) | | | | | | | | |
| 73 | K21.03625 | 008 981 3025 | (008 981 5225) | 1 | ŞANZIMAN ARKA BİLYA | ROLLER BEARING | 80X150X28mm | | ♦ | ♦ | ♦ |
| | | | (007 981 3325) | | | | | | | | |
| 74 | K21.04081 | 389 262 7754 | | 1 | ŞANZIMAN HEYKEL AYAR PULU | THRUST WASHER | 1,40mm | | ♦ | ♦ | ♦ |
| 74 | K21.04139 | 389 262 5152 | | 1 | ŞANZIMAN HEYKEL AYAR PULU | THRUST WASHER | 0,80mm | | ♦ | ♦ | ♦ |
| 74 | K21.04080 | 389 262 5052 | | 1 | ŞANZIMAN HEYKEL AYAR PULU | THRUST WASHER | 0,40mm | | ♦ | ♦ | ♦ |

NOTES :
Parts encoded alphabetic and numaric are used together.

NOTLAR :
Alfabetik ve rakam ile kodlanan parçalar birlikte kullanılır.





Original parts names, oem numbers, symbols and descriptions used in this catalogue are for reference purposes only.

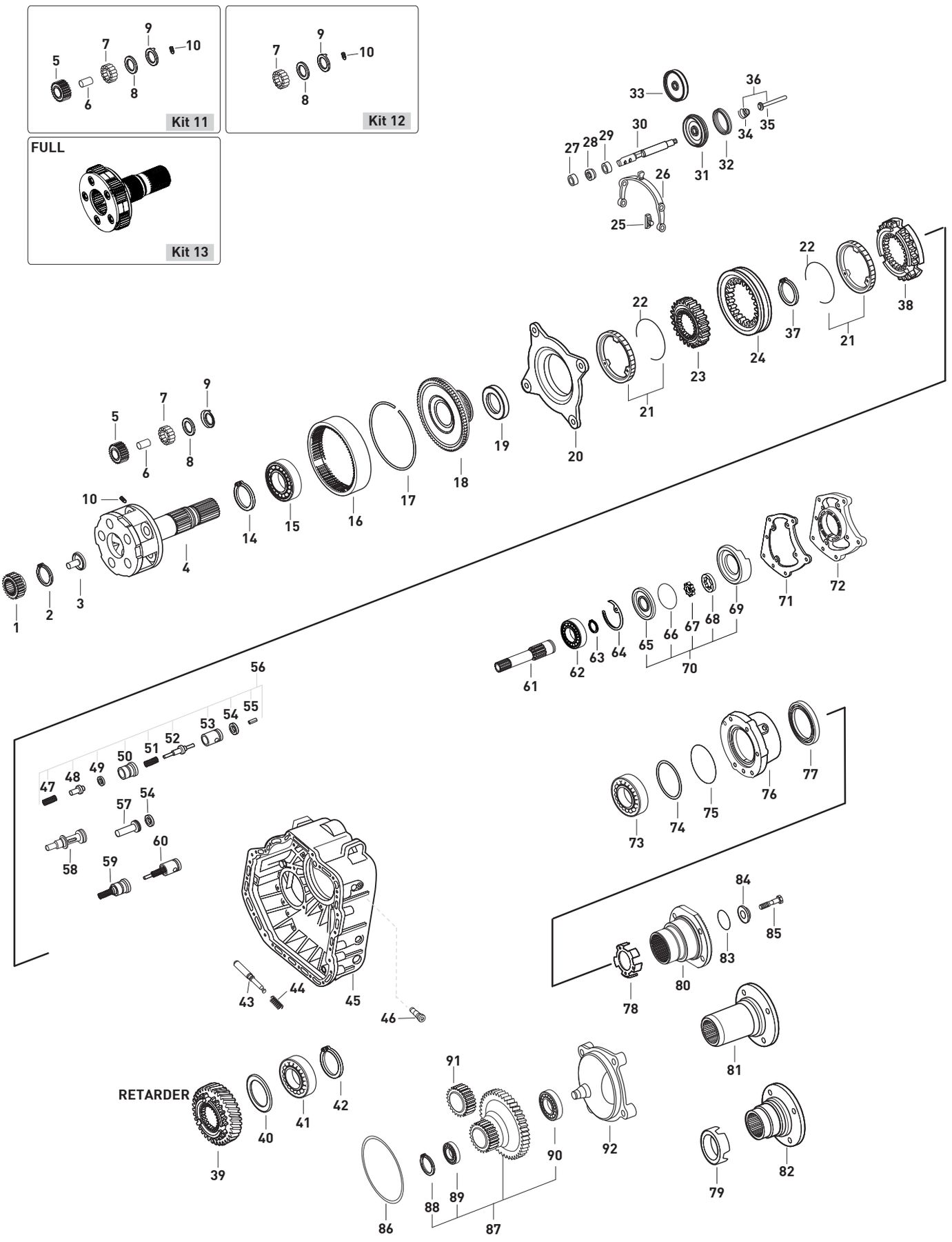




Original parts names, oem numbers, symbols and descriptions used in this catalogue are for reference purposes only.

| Fig. | Kacmaz No | Oem No | Oem Old No | Pcs. | Ürün Tanımı | Description | Sizes | Not | 715515 | 715519 | 715535 |
|---|---|---|---|---|---|---|---|---|---|---|---|
| 74 | K21.04079 | 389 262 7654 | | 1 | ŞANZIMAN HEYKEL AYAR PULU | THRUST WASHER | 0,25mm | | ♦ | ♦ | ♦ |
| 74 | K21.04140 | 389 262 4952 | | 1 | ŞANZIMAN HEYKEL AYAR PULU | THRUST WASHER | 0,20mm | | ♦ | ♦ | ♦ |
| 74 | K21.04141 | 389 262 4852 | | 1 | ŞANZIMAN HEYKEL AYAR PULU | THRUST WASHER | 0,15mm | | ♦ | ♦ | ♦ |
| 74 | K21.04078 | 389 262 4752 | | 1 | ŞANZIMAN HEYKEL AYAR PULU | THRUST WASHER | 0,10mm | | ♦ | ♦ | ♦ |
| 75 | K21.06713 | 015 997 2848 | (020 997 8548) | 1 | ŞANZIMAN ARKA KAPAK ORİNGİ | O-RING | 149,5X3mm | | ♦ | ♦ | ♦ |
| 76 | K21.06238 | 389 261 1920 | (389 261 2020) | 1 | ŞANZIMAN ARKA KAPAK | COVER | | | ♦ | ♦ | ♦ |
| 76 | K21.06239 | 930 261 0420 | (930 261 0520) | 1 | ŞANZIMAN ARKA KAPAK | COVER | | RETARDER | ♦ | ♦ | ♦ |
| | | | (389 261 1820) | | | | | | | | |
| 77 | K21.03512 | 015 997 7846 | (023 997 1647) | 1 | ŞANZIMAN ARKA KEÇE | OIL SEAL | 95X115X15,5mm | | ♦ | ♦ | ♦ |
| 78 | K21.04134 | 930 262 0028 | | 1 | ŞANZIMAN KM DEVİR SACI | PULSE STAR | | (A) | ♦ | ♦ | |
| 78 | | 945 262 0228 | | 1 | ŞANZIMAN KM DEVİR SACI | PULSE STAR | | (B) | ♦ | ♦ | |
| 78 | K21.06947 | 930 262 1428 | (930 262 0128) | 1 | ŞANZIMAN KM DEVİR SACI | PULSE STAR | | (C) | ♦ | | ♦ |
| 79 | | 945 262 0528 | (389 260 0150) | 1 | ŞANZIMAN KM DEVİR SACI | PULSE STAR | | (D) | ♦ | | |
| 80 | K21.03084 | 389 262 0445 | | 1 | ŞANZIMAN FLANŞI | COMPANION FLANGE | 4-H, Ø180mm | (D) | ♦ | ♦ | ♦ |
| 80 | K21.03211 | 930 262 0045 | | 1 | ŞANZIMAN FLANŞI | COMPANION FLANGE | 4-H, Ø180mm | (A)(C) | ♦ | ♦ | ♦ |
| 80 | K21.03195 | 930 262 0145 | | 1 | ŞANZIMAN FLANŞI | COMPANION FLANGE | Ø200mm | (A)(C) | ♦ | | |
| 81 | | 387 264 1945 | | 1 | ŞANZIMAN FLANŞI | COMPANION FLANGE | Ø198mm | | ♦ | | |
| 81 | | 387 264 2045 | | 1 | ŞANZIMAN FLANŞI | COMPANION FLANGE | Ø198mm | | ♦ | | |
| 81 | | 945 262 0445 | | 1 | ŞANZIMAN FLANŞI | COMPANION FLANGE | Ø200mm | | ♦ | | |
| 81 | | 945 262 0545 | | 1 | ŞANZIMAN FLANŞI | COMPANION FLANGE | Ø200mm | | ♦ | | |
| 82 | K21.03196 | 945 262 0045 | | 1 | ŞANZIMAN FLANŞI | COMPANION FLANGE | 4-H, Ø180mm | (B) | ♦ | ♦ | ♦ |
| 83 | K21.04310 | 014 997 5148 | (020 997 8648) | 1 | ŞANZIMAN FLANŞ ORİNGİ | O-RING | 72,4X5,3mm | | ♦ | ♦ | ♦ |
| 83 | | 025 997 5345 | | 1 | ŞANZIMAN FLANŞ ORİNGİ | O-RING | 70,8X5,1mm | | ♦ | ♦ | ♦ |
| 84 | K21.04214 | 945 262 0762 | | 1 | ŞANZIMAN FLANŞI ALIN PULU | THRUST WASHER | 93X20mm | (1) | ♦ | ♦ | ♦ |
| 84 | K21.06977 | 389 262 0362 | (945 262 0062) | 1 | ŞANZIMAN FLANŞI ALIN PULU | THRUST WASHER | 95X24mm | (2) | ♦ | ♦ | ♦ |
| 85 | K21.06280 | 000000 006750 | (000000 005728) | 1 | ŞANZIMAN FLANŞI ALIN VİDASI | SCREW | M20X1,5X80 | (1) | ♦ | ♦ | ♦ |
| 85 | K21.06028 | 945 990 0019 | (389 990 2019) | 1 | ŞANZIMAN FLANŞI ALIN VİDASI | SCREW | M24X2X85 | (2) | ♦ | ♦ | ♦ |
| | | | (389 990 0219) | | | | | | | | |
| 86 | | 017 997 9145 | (028 997 8148) | 1 | ŞANZIMAN ARKA KAPAK ORİNGİ | O-RING | 198X3mm | | ♦ | | |
| 87 | K21.06311 | 930 264 0921 | | 1 | DİREKSİYON POMPA DİŞLİSİ | GEAR | | | ♦ | | |
| 87 | K21.06312 | 930 264 0821 | | 1 | DİREKSİYON POMPA DİŞLİSİ | GEAR | | | ♦ | | |
| 88 | | 000983 020000 | | 1 | DİR.POMPA DİŞLİ BİLYA SEKMANI | RETAINING RING | | | ♦ | | |
| 89 | | 000625 006004 | | 1 | DİREKSİYON POMPA DİŞLİ ÖN BİLYA | ROLLER BEARING | | | ♦ | | |
| 90 | | 000625 506007 | | 1 | DİREKSİYON POMPA DİŞLİ ARKA BİLYA | ROLLER BEARING | | | ♦ | | |
| 91 | K21.03671 | 930 264 0721 | | 1 | DİREKSİYON POMPA DİŞLİ KARŞILIĞI | GEAR | | | ♦ | | |
| 92 | K21.06300 | 930 264 0111 | (930 264 0211) | 1 | DİREKSİYON POMPA KAPAĞI | HOUSING | | | ♦ | | |

NOTES :
Parts encoded alphabetic and numaric are used together.

NOTLAR :
Alfabetik ve rakam ile kodlanan parçalar birlikte kullanılır.





Original parts names, oem numbers, symbols and descriptions used in this catalogue are for reference purposes only.

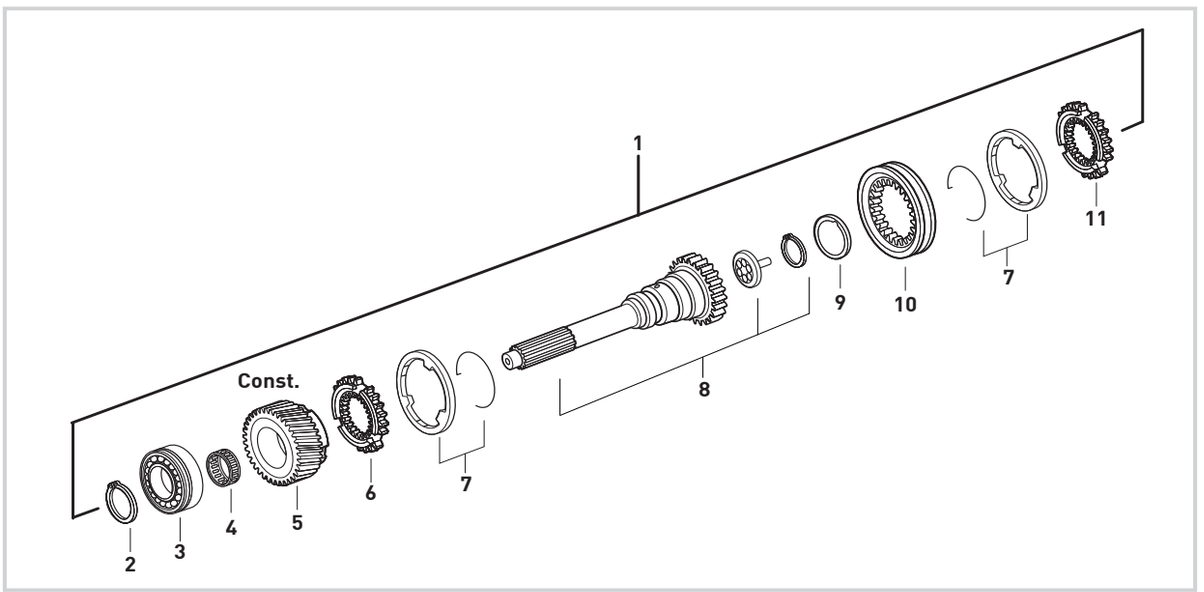


| Fig. | Kacmaz No. | Oem No | Oem Old No | Pcs. | Ürün Tanımı | Description | Sizes |
|---|---|---|---|---|---|---|---|
| 1 | K21.06394 | | | Kit | PRİZDİREK KOMPLE | INPUT SHAFT COMPLETE | |
| 2 | K21.04346 | 387 262 8773 | | 1 | PRİZDİREK ÖN BİLYA SEKMANI | RETAINING RING | 3,20mm |
| 3 | K21.03618 | 011 981 1305 | (014 981 9005) | 1 | PRİZDİREK ÖN BİLYA | ROLLER BEARING | 75X140X34,25mm |
| 4 | K21.03818 | 018 981 8210 | (018 981 6410) | 1 | TAKVİYE MASURA BİLYA | NEEDLE CAGE | 84X90X39,5mm |
| 5 | K21.06315 | 930 262 3117 | (930 262 0117) | 1 | TAKVİYE DİŞLİSİ 27 DİŞ | CONSTANT GEAR 27 T. | |
| | | | (930 262 0217) | | | | |
| 6 | K21.03146 | 945 262 8234 | (945 262 5434) | 1 | TAKVİYE SENKROMENÇ | ENGAGING RING | |
| 7 | K21.06299 | 947 260 3545 | (947 260 5145) | 2 | TAKVİYE FRENLEME (C) | SYNCHRONIZING CONE / C | |
| 8 | K21.06284 | 930 262 1003 | (930 262 0003) | 1 | PRİZDİREK 66 DİŞ | INPUT SHAFT 66 T. | |
| 9 | K21.03513 | 001 262 0262 | (000 262 8662) | 1 | PRİZDİREK ARKA KEÇE | OIL SEAL | 73,5X101X7mm |
| 10 | K21.03151 | 945 262 6523 | (930 262 0523) | 1 | TAKVİYE HALKA | ENGAGING SLEEVE | |
| 11 | K21.03576 | 930 262 0234 | (930 262 0034) | 1 | TAKVİYE SENKROMENÇ | ENGAGING RING | |



**Original parts names, oem numbers, symbols and descriptions used in this catalogue are for reference purposes only.**

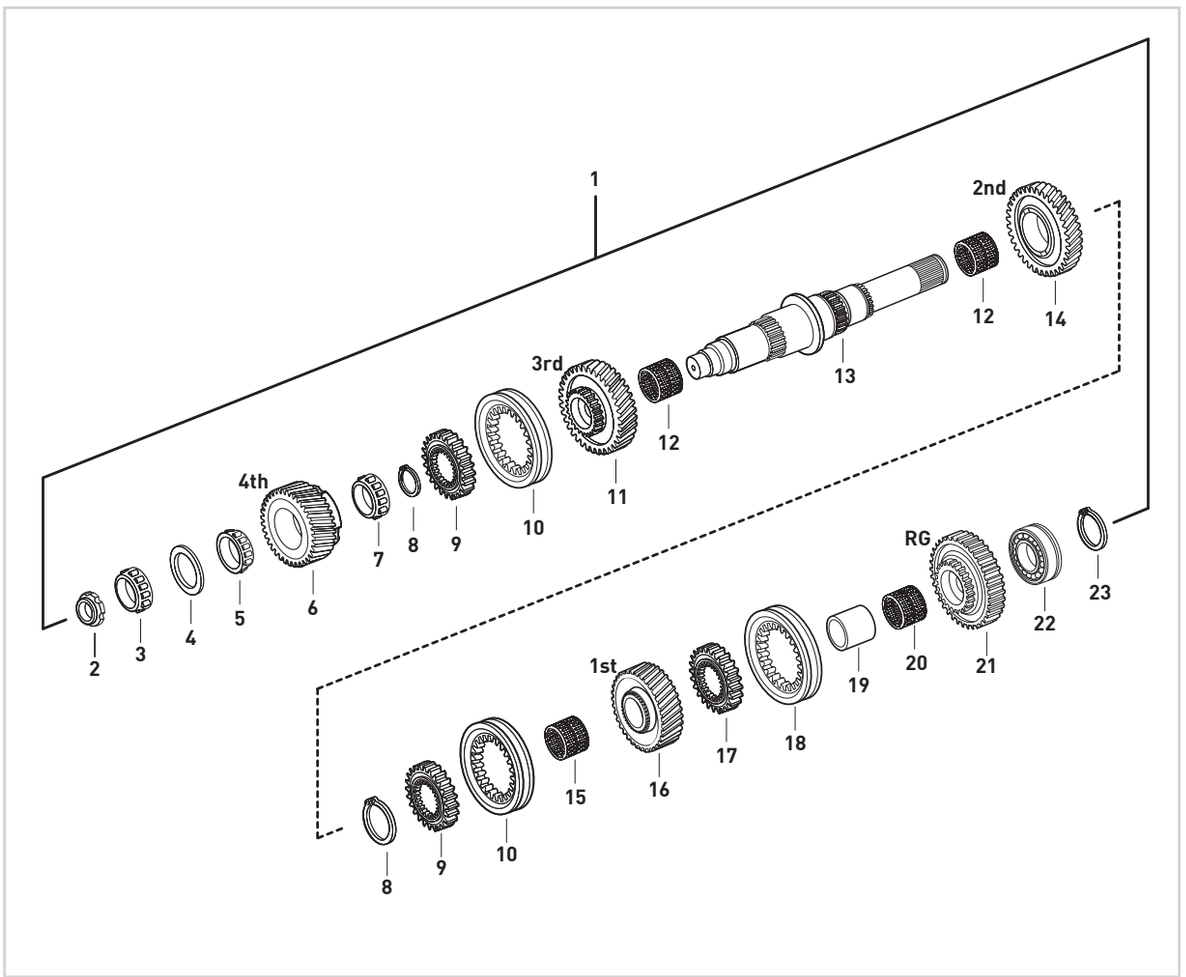


| Fig. | Kacmaz No. | Oem No | Oem Old No | Pcs. | Ürün Tanımı | Description | Sizes |
|---|---|---|---|---|---|---|---|
| 1 | K21.06356 | | | Kit | KAMALI MİL KOMPLE | MAIN SHAFT COMPLETE | |
| 2 | K21.03432 | 945 990 0250 | (945 990 0150) | 1 | KAMALI MİL SOMUNU | NUT | M30X1,5 |
| 3 | K21.03632 | 020 981 5205 | (017 981 1305) | 1 | KAMALI MİL UÇ BİLYA | ROLLER BEARING | 39,69X40,39mm |
| 4 | K21.04025 | 389 262 3252 | | 1 | KAMALI MİL AYAR PULU | THRUST WASHER | 2,00mm |
| 5 | K21.03620 | 017 981 5105 | (015 981 6105) | 1 | 3.VİTES DİŞLİ ÖN BİLYA | ROLLER BEARING | 50X41,3mm |
| 6 | K21.06276 | 930 262 2217 | | 1 | 4.VİTES DİŞLİSİ 29 DİŞ | GEAR 4th 29 T. | |
| 7 | K21.03622 | 015 981 6205 | (015 981 8105) | 1 | 4.VİTES DİŞLİSİ ARKA BİLYA | ROLLER BEARING | 55X29,8mm |
| 8 | K21.04344 | 387 262 7973 | | 2 | 3./4.VİTES YILDIZ DİŞLİ SEKMANI | RETAINING RING | 2,70mm |
| 9 | K21.03581 | 960 262 3135 | (945 262 3635) | 2 | 3./4.VİTES YILDIZ DİŞLİ | SYNCHRONIZER HUB | |
| 10 | K21.03582 | 960 262 1523 | (930 262 0123) | 2 | 3./4.VİTES HALKASI | ENGAGING SLEEVE | |
| 11 | K21.06275 | 930 262 0613 | (930 262 0413) | 1 | 3.VİTES DİŞLİSİ 34 DİŞ | GEAR 3rd 34 T. | |
| 12 | K21.03810 | 018 981 6610 | (010 981 5310) | 2 | 2./3.VİTES MASURA BİLYA | NEEDLE CAGE | 85X93X53mm |
| 13 | K21.06264 | 930 262 0605 | (930 262 0305) | 1 | KAMALI MİL | MAIN SHAFT | |
| 14 | K21.06043 | 945 262 6812 | | 1 | 2.VİTES DİŞLİSİ 39 DİŞ | GEAR 2nd 39 T. | |
| 15 | K21.03839 | 945 981 0010 | (018 981 8110) | 1 | 1.VİTES MASURA BİLYA | NEEDLE CAGE | 75X83X48mm |
| 16 | K21.06240 | 930 262 1111 | (930 262 1211) | 1 | 1.VİTES DİŞLİSİ 44 DİŞ | GEAR 1st 44 T. | |
| 17 | K21.03164 | 389 262 3935 | | 1 | GERİ VİTES YILDIZ DİŞLİ | SYNCHRONIZER HUB | |
| 18 | K21.03061 | 389 262 1823 | (389 262 0923) | 1 | GERİ VİTES HALKASI | ENGAGING SLEEVE | |
| 19 | K21.03112 | 389 262 2550 | (389 262 1650) | 1 | GERİ VİTES MASURA BİLYA ÇANAĞI | BEARING RACE | |
| 20 | K21.03803 | 009 981 1510 | (017 981 7810) | 1 | GERİ VİTES MASURA BİLYA | NEEDLE CAGE | 78X86X35mm |
| 21 | K21.03168 | 945 262 3333 | (389 262 2133) | 1 | GERİ VİTES DİŞLİSİ 40 DİŞ | REVERSE GEAR 40 T. | |
| 22 | K21.03623 | 014 981 6105 | (016 981 1305) | 1 | KAMALI MİL ARKA BİLYA | ROLLER BEARING | 60X130X33,2mm |
| 23 | K21.04331 | 007 994 1841 | (006 994 9941) | 1 | KAMALI MİL ARKA BİLYA SEKMANI | RETAINING RING | 2,50mm |



Original parts names, oem numbers, symbols and descriptions used in this catalogue are for reference purposes only.

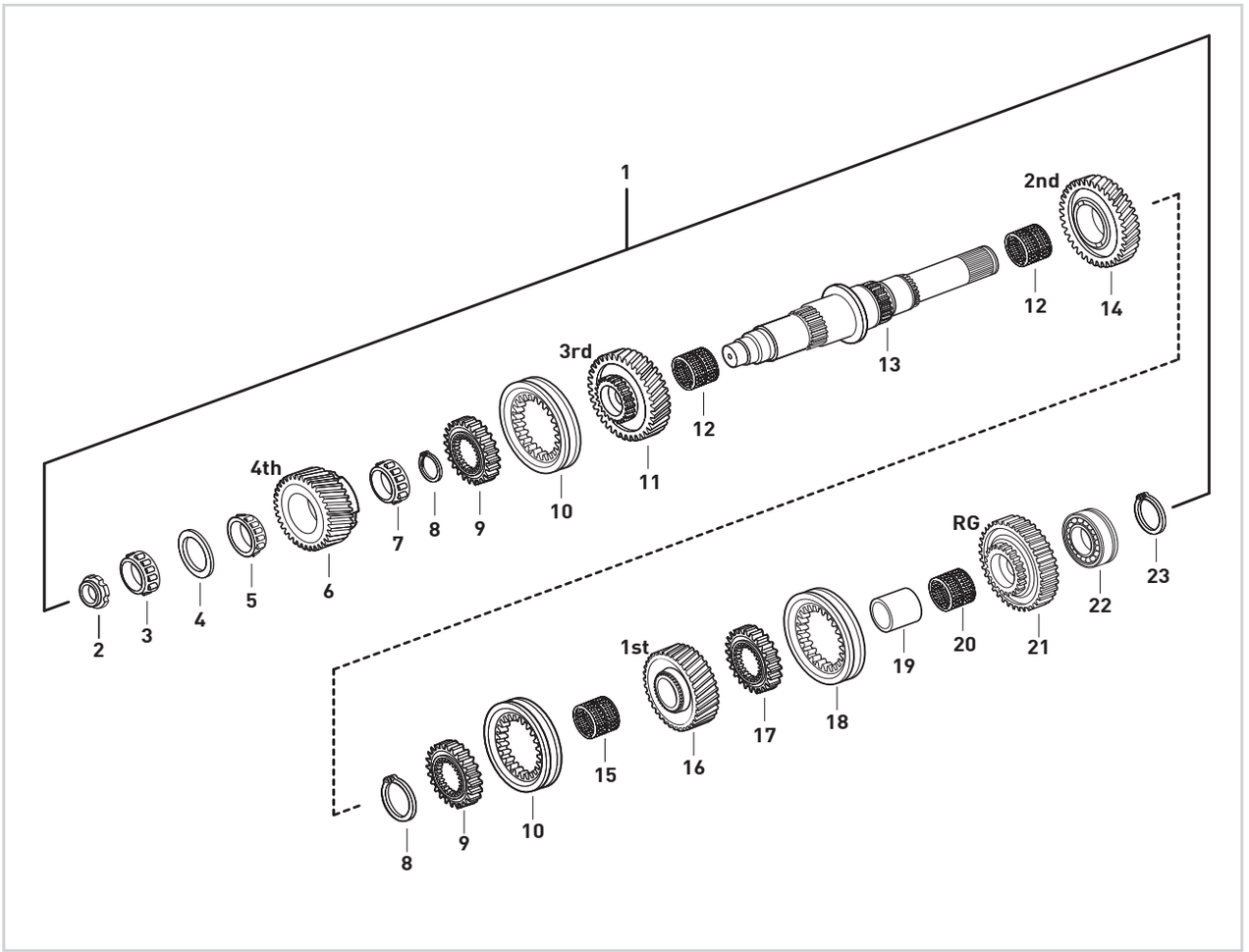


| Fig. | Kacmaz No. | Oem No | Oem Old No | Pcs. | Ürün Tanımı | Description | Sizes |
|---|---|---|---|---|---|---|---|
| 1 | K21.06357 | | | Kit | KAMALI MİL KOMPLE | MAIN SHAFT COMPLETE | |
| 2 | K21.03432 | 945 990 0250 | (945 990 0150) | 1 | KAMALI MİL SOMUNU | NUT | M30X1,5 |
| 3 | K21.03632 | 020 981 5205 | (017 981 1305) | 1 | KAMALI MİL UÇ BİLYA | ROLLER BEARING | 39,69X40,39mm |
| 4 | K21.04025 | 389 262 3252 | | 1 | KAMALI MİL AYAR PULU | THRUST WASHER | 2,00mm |
| 5 | K21.03620 | 017 981 5105 | (015 981 6105) | 1 | 3.VİTES DİŞLİ ÖN BİLYA | ROLLER BEARING | 50X41,3mm |
| 6 | K21.06276 | 930 262 2217 | | 1 | 4.VİTES DİŞLİSİ 29 DİŞ | GEAR 4th 29 T. | |
| 7 | K21.03622 | 015 981 6205 | (015 981 8105) | 1 | 4.VİTES DİŞLİSİ ARKA BİLYA | ROLLER BEARING | 55X29,8mm |
| 8 | K21.04344 | 387 262 7973 | | 2 | 3./4.VİTES YILDIZ DİŞLİ SEKMANI | RETAINING RING | 2,70mm |
| 9 | K21.03581 | 960 262 3135 | (945 262 3635) | 2 | 3./4.VİTES YILDIZ DİŞLİ | SYNCHRONIZER HUB | |
| 10 | K21.03582 | 960 262 1523 | (930 262 0123) | 2 | 3./4.VİTES HALKASI | ENGAGING SLEEVE | |
| 11 | K21.06275 | 930 262 0613 | (930 262 0413) | 1 | 3.VİTES DİŞLİSİ 34 DİŞ | GEAR 3rd 34 T. | |
| 12 | K21.03810 | 018 981 6610 | (010 981 5310) | 2 | 2./3.VİTES MASURA BİLYA | NEEDLE CAGE | 85X93X53mm |
| 13 | K21.06358 | 930 262 1005 | | 1 | KAMALI MİL | MAIN SHAFT | |
| 14 | K21.06043 | 945 262 6812 | | 1 | 2.VİTES DİŞLİSİ 39 DİŞ | GEAR 2nd 39 T. | |
| 15 | K21.03839 | 945 981 0010 | (018 981 8110) | 1 | 1.VİTES MASURA BİLYA | NEEDLE CAGE | 75X83X48mm |
| 16 | K21.06240 | 930 262 1111 | (930 262 1211) | 1 | 1.VİTES DİŞLİSİ 44 DİŞ | GEAR 1st 44 T. | |
| 17 | K21.06995 | 945 262 3935 | | 1 | GERİ VİTES YILDIZ DİŞLİ | SYNCHRONIZER HUB | |
| 18 | K21.03061 | 389 262 1823 | (389 262 0923) | 1 | GERİ VİTES HALKASI | ENGAGING SLEEVE | |
| 19 | K21.03065 | 389 262 0150 | | 1 | GERİ VİTES MASURA BİLYA ÇANAĞI | BEARING RACE | |
| 20 | K21.03813 | 013 981 1810 | (013 981 2610) | 1 | GERİ VİTES MASURA BİLYA | NEEDLE CAGE | 78X86X33mm |
| 21 | K21.06044 | 960 262 0033 | | 1 | GERİ VİTES DİŞLİSİ 40 DİŞ | REVERSE GEAR 40 T. | |
| 22 | K21.03661 | 002 981 8181 | | 1 | KAMALI MİL ARKA BİLYA | ROLLER BEARING | 60X130X35,2mm |
| 23 | K21.04331 | 007 994 1841 | (006 994 9941) | 1 | KAMALI MİL ARKA BİLYA SEKMANI | RETAINING RING | 2,50mm |



**Original parts names, oem numbers, symbols and descriptions used in this catalogue are for reference purposes only.**

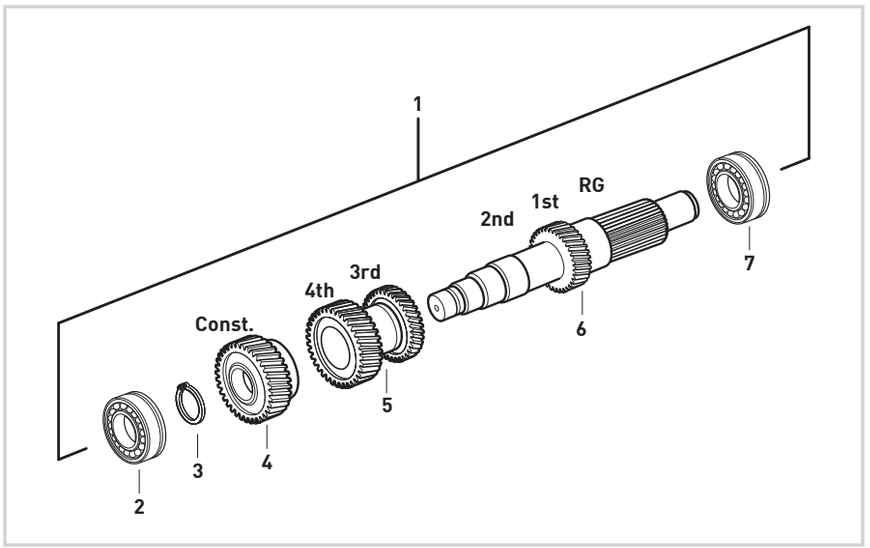


| Fig. | Kacmaz No. | Oem No | Oem Old No | Pcs. | Ürün Tanımı | Description | Sizes |
|---|---|---|---|---|---|---|---|
| 1 | K21.06361 | | | Kit | GRUP MİLİ KOMPLE | COUNTER SHAFT COMPLETE | |
| 2 | K21.03606 | 015 981 9005 | (014 981 1405) | 1 | GRUP MİLİ ÖN BİLYA | ROLLER BEARING | 50,8X100X35mm |
| 3 | K21.06425 | 389 994 0041 | | 1 | GRUP MİLİ ÖN BİLYA SEKMANI | RETAINING RING | 2,50mm |
| 4 | K21.06319 | 930 263 2510 | (930 263 0110) | 1 | TAKVİYE DİŞLİ KARŞILIĞI 38 DİŞ | CONSTANT GEAR 38T | |
| 5 | K21.06321 | 947 263 1613 | (945 263 5613) | 1 | TAK.VE 4.VİT.KARŞILIĞI 27/34 DİŞ | DOUBLE GEAR 27/34T | |
| | | | (945 263 5513) | | | | |
| | | | (945 263 5413) | | | | |
| 6 | K21.06322 | 930 263 0602 | | 1 | GRUP MİLİ 16/21 DİŞ | COUNTER SHAFT 16T/21T | |
| 7 | K21.03624 | 016 981 1205 | (012 981 9405) | 1 | GRUP MİLİ ARKA BİLYA | ROLLER BEARING | 60X130X33,80mm |



Original parts names, oem numbers, symbols and descriptions used in this catalogue are for reference purposes only.

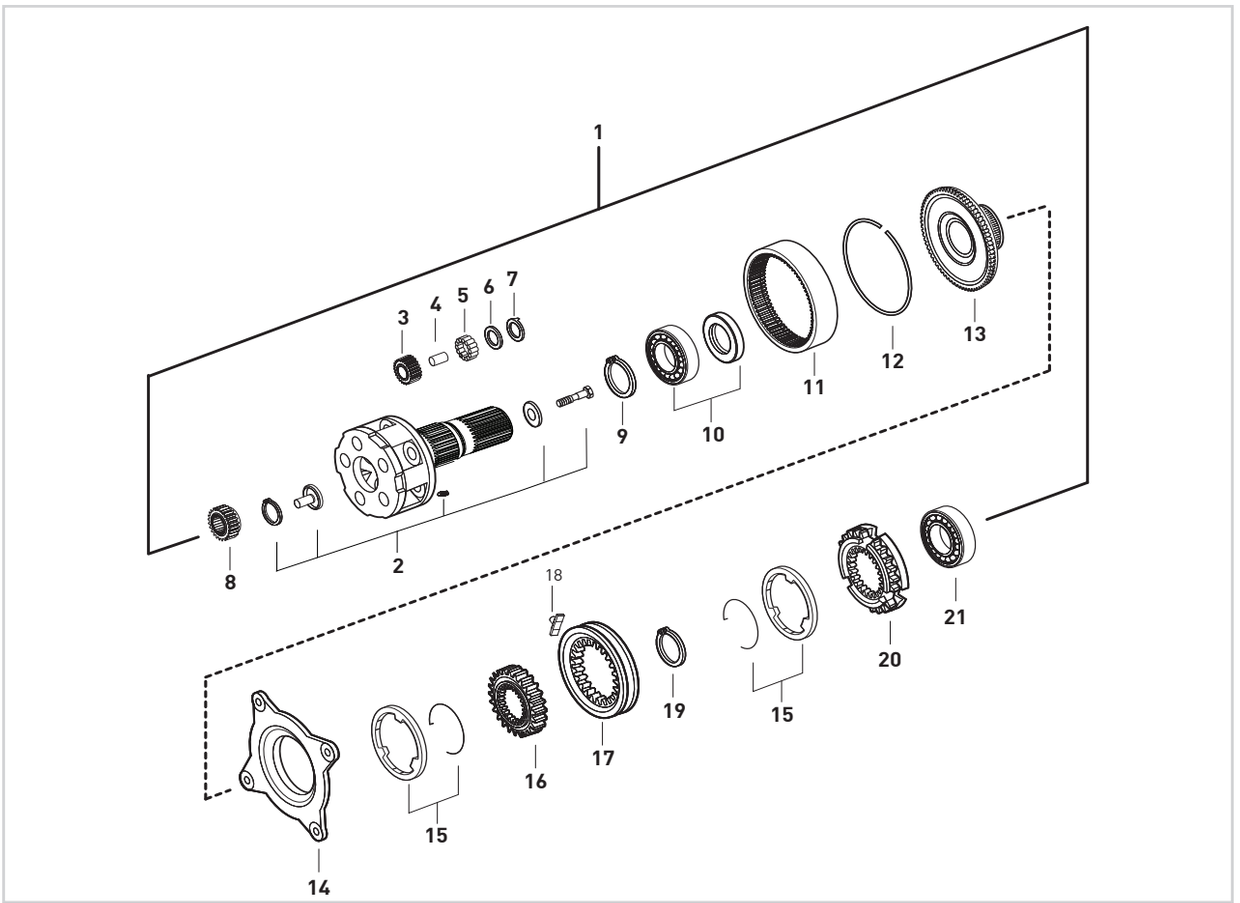


| Fig. | Kacmaz No. | Oem No | Oem Old No | Pcs. | Ürün Tanımı | Description | Sizes |
|---|---|---|---|---|---|---|---|
| 1 | K21.03554 | | | Kit | AĞIR SERİ ARKA AKTARMA KOMPLE | PLANETARY CARRIER COMPLETE | |
| 2 | K21.03180 | 946 260 3561 | (946 260 3661) | 1 | ŞANZIMAN HEYKELİ (BOŞ) | PLANETARY CARRIER (EMPTY) | |
| | | | (945 260 4561) | | | | |
| | | | (945 260 4461) | | | | |
| 3 | K21.03436 | 945 262 0006 | | 5 | HEYKEL KOZA DİŞLİSİ 28 DİŞ | PLANETARY GEAR 28 T. | |
| 4 | K21.03437 | 389 262 0407 | | 5 | HEYKEL KOZA DİŞLİ PİMİ | PLANETARY GEAR PIN | |
| 5 | K21.03816 | 000 981 4186 | (000 981 4386) | 125 | HEYKEL KOZA DİŞLİ TANE BİLYA | NEEDLE ROLLER | D5X39,6 |
| 6 | K21.04074 | 389 262 0162 | (389 262 6462) | 10 | HEYKEL KOZA DİŞLİ PULU | THRUST WASHER | |
| 7 | K21.04075 | 945 262 1162 | (945 262 0162) | 10 | HEYKEL KOZA DİŞLİ PULU | THRUST WASHER | |
| 8 | K21.03169 | 945 262 0909 | (389 262 0809) | 1 | GÜNEŞ DİŞLİ 25 DİŞ | SUN GEAR 25 T. | |
| | | | (389 262 0909) | | | | |
| 9 | K21.06864 | 000472 130000 | | 1 | ÇEMBER DİŞLİ BİLYA SEKMANI | RETAINING RING | 130X4mm |
| 10 | K21.03614 | 008 981 1325 | (004 981 8725) | 1 | ÇEMBER DİŞLİ BİLYASI | ROLLER BEARING | 90X130X14mm |
| 11 | K21.03449 | 945 262 1208 | (945 262 0808) | 1 | ÇEMBER DİŞLİ 85 DİŞ | RING WHEEL 85 T. | |
| 12 | K21.04253 | 389 262 0773 | | 1 | ÇEMBER DİŞLİ SEKMANI | LOCK RING | |
| 13 | K21.03442 | 930 262 0125 | (389 262 1425) | 1 | PLANET ÇAN DİŞLİ 85 DİŞ | CARRIER HUB 85 T. | |
| 14 | K21.03037 | 947 260 3036 | (947 260 0836) | 1 | TABLA SENKROMENÇ | FOLLOWER RING | |
| 15 | K21.03185 | 947 260 0945 | | 2 | AĞIR SERİ FRENLEME (Mo) | SYNCHRONIZING CONE / Mo | |
| 16 | K21.03079 | 389 262 4935 | (389 262 2035) | 1 | AĞIR SERİ YILDIZ DİŞLİ 73 DİŞ | SYNCHRONIZER HUB 73 T. | |
| 17 | K21.03033 | 945 262 6923 | (930 262 0623) | 1 | AĞIR SERİ HALKA | ENGAGING SLEEVE | |
| 18 | K21.03431 | 960 265 0049 | (947 265 0349) | 2 | AĞIR SERİ HİLAL PABUCU | SLIDING PAD | |
| 19 | K21.04356 | 000471 120000 | | 1 | AĞIR SERİ YILDIZ DİŞLİ SEKMANI | RETAINING RING | |
| 20 | K21.03186 | 945 262 3834 | | 1 | SERİ SENKROMENÇ | ENGAGING RING | |
| 21 | K21.03625 | 008 981 3025 | (008 981 5225) | 1 | ŞANZIMAN ARKA BİLYA | ROLLER BEARING | 80X150X28mm |





**Original parts names, oem numbers, symbols and descriptions used in this catalogue are for reference purposes only.**

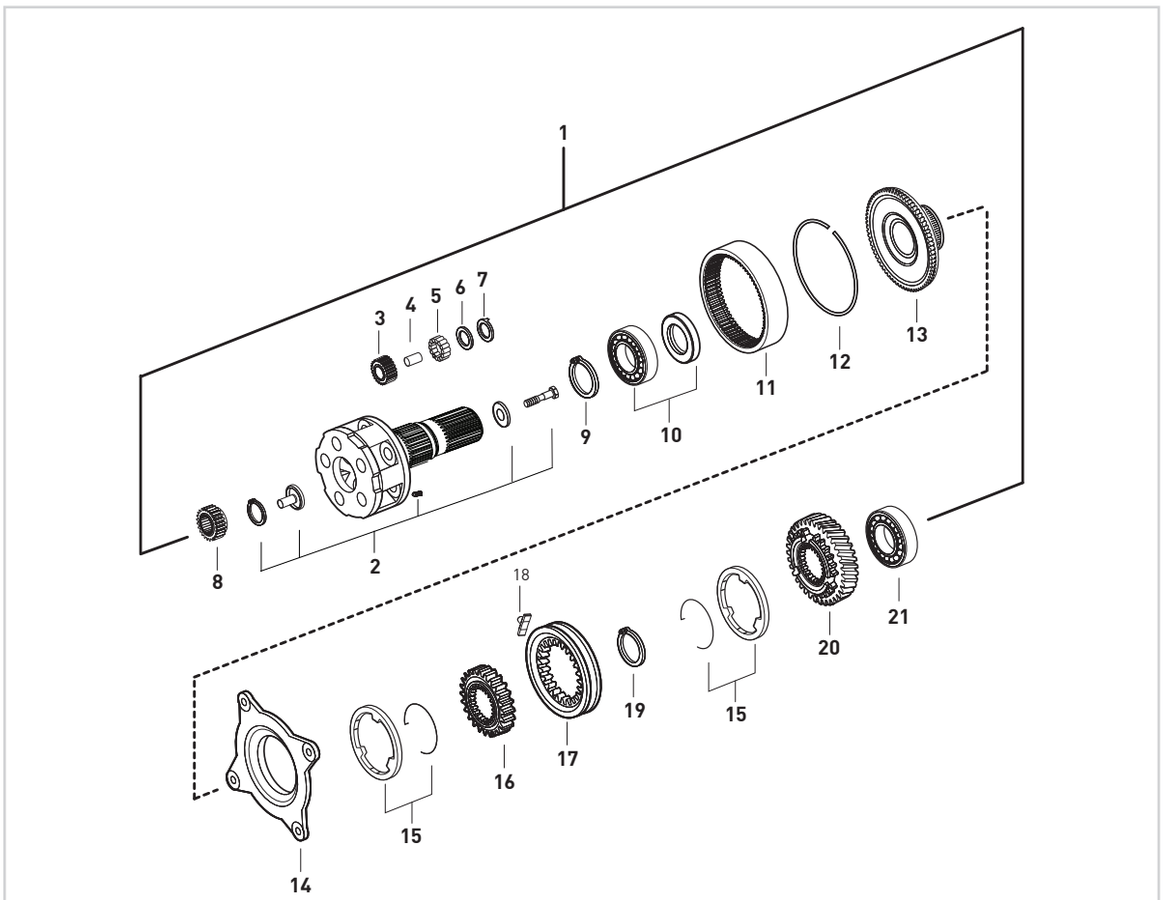


| Fig. | Kacmaz No. | Oem No | Oem Old No | Pcs. | Ürün Tanımı | Description | Sizes |
|---|---|---|---|---|---|---|---|
| 1 | K21.06384 | | | kit | AĞIR SERİ ARKA AKTARMA KOMPLE | PLANETARY CARRIER COMPLETE | |
| 2 | K21.03180 | 946 260 3561 | (946 260 3661) | 1 | ŞANZIMAN HEYKELİ (BOŞ) | PLANETARY CARRIER (EMPTY) | |
| | | | (945 260 4561) | | | | |
| | | | (945 260 4461) | | | | |
| 3 | K21.03436 | 945 262 0006 | | 5 | HEYKEL KOZA DİŞLİSİ 28 DİŞ | PLANETARY GEAR 28 T. | |
| 4 | K21.03437 | 389 262 0407 | | 5 | HEYKEL KOZA DİŞLİ PİMİ | PLANETARY GEAR PIN | |
| 5 | K21.03816 | 000 981 4186 | (000 981 4386) | 125 | HEYKEL KOZA DİŞLİ TANE BİLYA | NEEDLE ROLLER | D5X39,6 |
| 6 | K21.04074 | 389 262 0162 | (389 262 6462) | 10 | HEYKEL KOZA DİŞLİ PULU | THRUST WASHER | |
| 7 | K21.04075 | 945 262 1162 | (945 262 0162) | 10 | HEYKEL KOZA DİŞLİ PULU | THRUST WASHER | |
| 8 | K21.03169 | 945 262 0909 | (389 262 0809) | 1 | GÜNEŞ DİŞLİ 25 DİŞ | SUN GEAR 25 T. | |
| | | | (389 262 0909) | | | | |
| 9 | K21.06864 | 000472 130000 | | 1 | ÇEMBER DİŞLİ BİLYA SEKMANI | RETAINING RING | 130X4mm |
| 10 | K21.03614 | 008 981 1325 | (004 981 8725) | 1 | ÇEMBER DİŞLİ BİLYASI | ROLLER BEARING | 90X130X14mm |
| 11 | K21.03449 | 945 262 1208 | (945 262 0808) | 1 | ÇEMBER DİŞLİ 85 DİŞ | RING WHEEL 85 T. | |
| 12 | K21.04253 | 389 262 0773 | | 1 | ÇEMBER DİŞLİ SEKMANI | LOCK RING | |
| 13 | K21.03442 | 930 262 0125 | (389 262 1425) | 1 | PLANET ÇAN DİŞLİ 85 DİŞ | CARRIER HUB 85 T. | |
| 14 | K21.03037 | 947 260 3036 | (947 260 0836) | 1 | TABLA SENKROMENÇ | FOLLOWER RING | |
| 15 | K21.03185 | 947 260 0945 | | 2 | AĞIR SERİ FRENLEME (Mo) | SYNCHRONIZING CONE / Mo | |
| 16 | K21.03079 | 389 262 4935 | (389 262 2035) | 1 | AĞIR SERİ YILDIZ DİŞLİ 73 DİŞ | SYNCHRONIZER HUB 73 T. | |
| 17 | K21.03033 | 945 262 6923 | (930 262 0623) | 1 | AĞIR SERİ HALKA | ENGAGING SLEEVE | |
| 18 | K21.03431 | 960 265 0049 | (947 265 0349) | 2 | AĞIR SERİ HİLAL PABUCU | SLIDING PAD | |
| 19 | K21.04356 | 000471 120000 | | 1 | AĞIR SERİ YILDIZ DİŞLİ SEKMANI | RETAINING RING | |
| 20 | K21.03188 | 930 264 0320 | | 1 | RETARDER DİŞLİSİ 64 DİŞ | RETARDER GEAR 64 T. | |
| 21 | K21.03625 | 008 981 3025 | (008 981 5225) | 1 | ŞANZIMAN ARKA BİLYA | ROLLER BEARING | 80X150X28mm |



Original parts names, oem numbers, symbols and descriptions used in this catalogue are for reference purposes only.

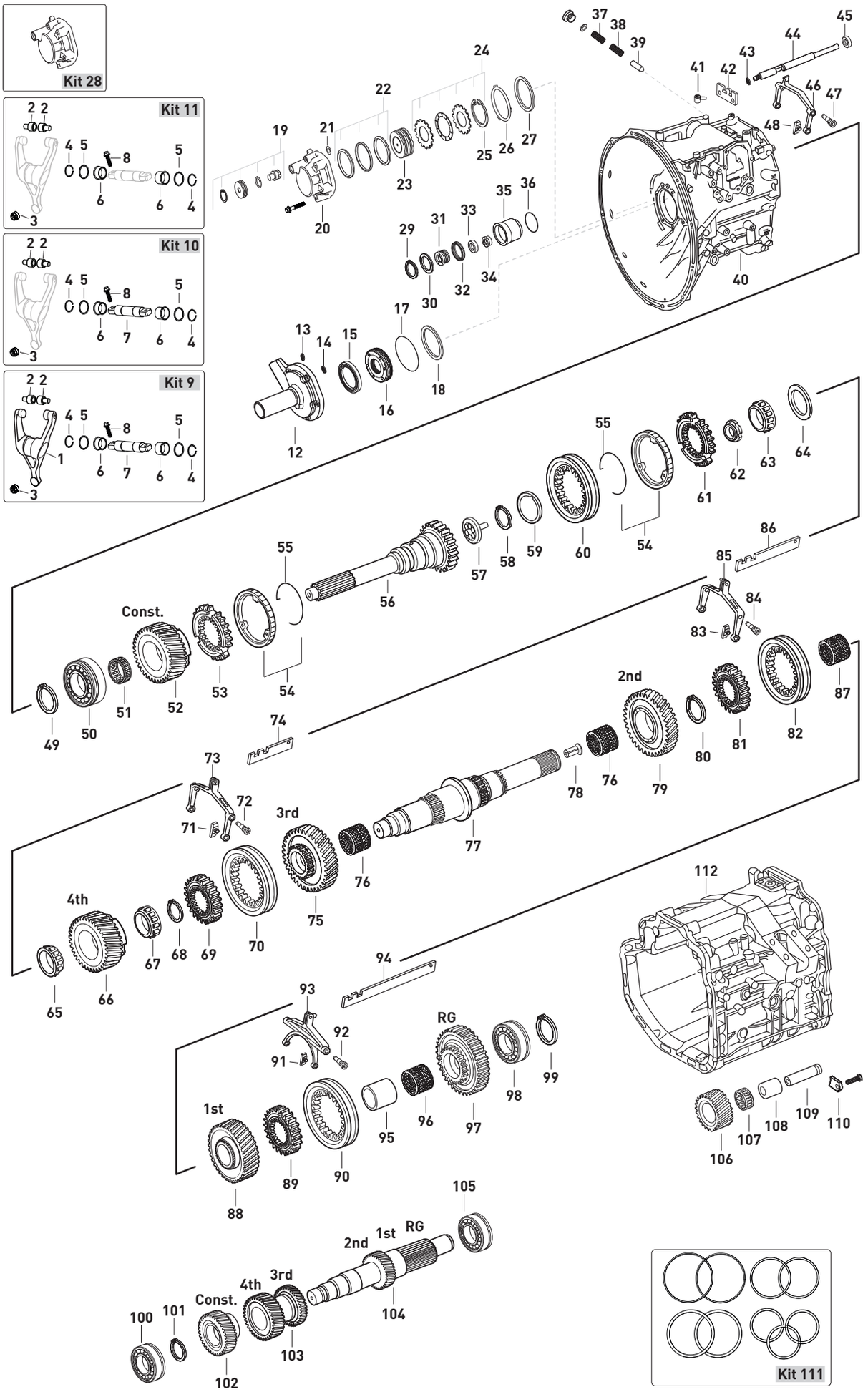




Original parts names, oem numbers, symbols and descriptions used in this catalogue are for reference purposes only.

| Fig. | Kacmaz No | Oem No | Oem Old No | Pcs. | Ürün Tanımı | Description | Sizes | Not | 715525 | 715529 | 715531 |
|---|---|---|---|---|---|---|---|---|---|---|---|
| 1 | | 655 250 1513 | | 1 | DEBRİYAJ ÇATALI | RELEASE FORK | | | ♦ | ♦ | ♦ |
| 2 | K21.07038 | 000 254 0017 | | 2 | DEBRİYAJ ÇATAL BURÇ VE PİMİ | CAM ROLLER | | | ♦ | ♦ | ♦ |
| 3 | K21.07040 | 000 254 0335 | | 1 | DEBRİYAJ ÇATAL PLASTİK BURCU | PLASTIC BUSHING | | | ♦ | ♦ | ♦ |
| 4 | | 912009 035100 | | 2 | DEBRİYAJ ÇATAL MİL SEKMANI | RETAINING RING | | | ♦ | ♦ | ♦ |
| 5 | | 000988 036100 | | 2 | DEBRİYAJ ÇATAL MİL AYAR PULU | WASHER | | | ♦ | ♦ | ♦ |
| 6 | | 002 992 1501 | | 2 | DEBRİYAJ ÇATAL MİL BURCU | BUSHING | 36,5X43X16mm | | ♦ | ♦ | ♦ |
| 7 | | 655 254 0206 | | 1 | DEBRİYAJ ÇATAL MİLİ | SHAFT | | | ♦ | ♦ | ♦ |
| 8 | | 910105 012026 | | 2 | DEBRİYAJ ÇATAL MİL VİDASI | SCREW | M12X40mm | | ♦ | ♦ | ♦ |
| 9 | K21.07036 | 655 250 1813 | | Kit | DEBRİYAJ ÇATALI KOMPLE | RELEASE FORK COMPLETE | | | ♦ | ♦ | ♦ |
| 9 | K21.97036 | 655 250 1813-S | | Kit | DEB.ÇATALI KOMPLE (BİLYALI TİP) | RELEASE FORK COMPLETE | | WITH BEARING | ♦ | ♦ | ♦ |
| 10 | K21.07037 | | | Kit | DEBRİYAJ ÇATALI TAMİR TAKIMI | RELEASE FORK REPAIR KIT | | | ♦ | ♦ | ♦ |
| 11 | K21.07039 | | | Kit | DEBRİYAJ ÇATALI TAMİR TK.MİLSİZ | RELEASE FORK REPAIR KIT | | W/OUT SHAFT | ♦ | ♦ | ♦ |
| 12 | K21.03429 | 945 261 1118 | (945 261 0118) | 1 | PRİZDİREK KEÇE KAPAĞI | COVER | | | ♦ | ♦ | ♦ |
| | | | (945 261 0818) | | | | | | | | |
| 13 | K21.06637 | 019 997 8348 | (020 997 7948) | 1 | PRİZDİREK KEÇE KAPAK ORİNGİ | O-RING | 14X4mm | | ♦ | ♦ | ♦ |
| 14 | K21.06636 | 015 997 4048 | (020 997 8748) | 1 | PRİZDİREK KEÇE KAPAK ORİNGİ | O-RING | 5X3mm | | ♦ | ♦ | ♦ |
| 15 | K21.03509 | 019 997 0547 | (023 997 7847) | 1 | PRİZDİREK KEÇESİ | OIL SEAL | 56X72X8mm | | ♦ | ♦ | ♦ |
| | | | (019 997 0647) | | | | | | | | |
| | | | (022 997 8547) | | | | | | | | |
| 16 | K21.06038 | 389 261 0665 | (389 261 0765) | 1 | YAĞ TUTUCU DİSK | OIL BAFFLE | 75X16mm | | ♦ | ♦ | ♦ |
| | | | (389 261 0865) | | | | | | | | |
| 17 | K21.06635 | 020 997 7848 | | 1 | PRİZDİREK KEÇE KAPAK ORİNGİ | O-RING | 138X3mm | | ♦ | ♦ | ♦ |
| 18 | K21.04162 | 389 262 4152 | (389 262 0955) | 1 | PRİZDİREK AYAR RAYNELİ | THRUST WASHER | 0,10mm | | ♦ | ♦ | ♦ |
| 18 | K21.04243 | 389 262 0855 | | 1 | PRİZDİREK AYAR RAYNELİ | THRUST WASHER | 0,15mm | | ♦ | ♦ | ♦ |
| 18 | K21.04151 | 389 262 0755 | | 1 | PRİZDİREK AYAR RAYNELİ | THRUST WASHER | 0,20mm | | ♦ | ♦ | ♦ |
| 18 | K21.06715 | 389 262 3055 | | 1 | PRİZDİREK AYAR RAYNELİ | THRUST WASHER | 0,25mm | | ♦ | ♦ | ♦ |
| 18 | K21.04221 | 389 262 3255 | | 1 | PRİZDİREK AYAR RAYNELİ | THRUST WASHER | 0,31mm | | ♦ | ♦ | ♦ |
| 18 | K21.04163 | 389 262 3555 | (389 262 0655) | 1 | PRİZDİREK AYAR RAYNELİ | THRUST WASHER | 0,40mm | | ♦ | ♦ | ♦ |
| | | | (389 262 4452) | | | | | | | | |
| 18 | K21.04164 | 389 262 3755 | (389 262 1954) | 1 | PRİZDİREK AYAR RAYNELİ | THRUST WASHER | 0,46mm | | ♦ | ♦ | ♦ |
| 18 | K21.04246 | 389 262 3855 | | 1 | PRİZDİREK AYAR RAYNELİ | THRUST WASHER | 0,49mm | | ♦ | ♦ | ♦ |
| 18 | K21.04250 | 389 262 4055 | (389 262 0155) | 1 | PRİZDİREK AYAR RAYNELİ | THRUST WASHER | 0,55mm | | ♦ | ♦ | ♦ |
| | | | (389 262 2154) | | | | | | | | |
| 18 | K21.04167 | 389 262 4255 | (389 262 2254) | 1 | PRİZDİREK AYAR RAYNELİ | THRUST WASHER | 0,61mm | | ♦ | ♦ | ♦ |
| 18 | K21.04168 | 389 262 4355 | (389 262 2354) | 1 | PRİZDİREK AYAR RAYNELİ | THRUST WASHER | 0,64mm | | ♦ | ♦ | ♦ |
| 18 | K21.04169 | 389 262 4555 | (389 262 2454) | 1 | PRİZDİREK AYAR RAYNELİ | THRUST WASHER | 0,70mm | | ♦ | ♦ | ♦ |
| 18 | K21.04170 | 389 262 4755 | (389 262 2554) | 1 | PRİZDİREK AYAR RAYNELİ | THRUST WASHER | 0,76mm | | ♦ | ♦ | ♦ |
| 18 | K21.04281 | 389 262 4855 | (389 262 0555) | 1 | PRİZDİREK AYAR RAYNELİ | THRUST WASHER | 0,79mm | | ♦ | ♦ | ♦ |
| 18 | K21.04282 | 389 262 5555 | | 1 | PRİZDİREK AYAR RAYNELİ | THRUST WASHER | 1,00mm | | ♦ | ♦ | ♦ |
| 18 | K21.04171 | 389 262 9654 | (389 262 2654) | 1 | PRİZDİREK AYAR RAYNELİ | THRUST WASHER | 2,00mm | | ♦ | ♦ | ♦ |
| 19 | K21.06498 | 930 260 0058 | | 1 | HAVALANDIRMA TAMİR TAKIMI | REPAIR KIT | | | ♦ | ♦ | ♦ |
| 20 | K21.06301 | 960 261 1933 | | 1 | GRUP DURDURUCU KAPAĞI | COVER | | | ♦ | ♦ | ♦ |
| 21 | K21.06636 | 015 997 4048 | (020 997 8748) | 1 | GRUP DURDURUCU PİSTON ORİNGİ | O-RING | 5X3mm | | ♦ | ♦ | ♦ |
| 22 | K21.06396 | 947 260 0718 | (960 260 3318) | 1 | GRUP DURD.PİSTON TAMİR TAKIMI | REPAIR KIT | | | ♦ | ♦ | ♦ |
| 23 | K21.06302 | 960 260 1718 | | 1 | GRUP DURDURUCU KAPAK PİSTONU | PISTON | | | ♦ | ♦ | ♦ |
| 24 | K21.06431 | 960 262 0291 | (960 262 0191) | 1 | KAVRAMA HALKA SETİ | PARTS KIT | | | ♦ | ♦ | ♦ |
| | | | (960 262 0091) | | | | | | | | |
| | | | (947 260 4036) | | | | | | | | |
| 25 | K21.06730 | 970 994 3541 | (000472 100000) | 1 | GRUP DURDURUCU KİLİT SEKMANI | RETAINING RING | 3,00mm | | ♦ | ♦ | ♦ |
| 26 | K21.06533 | 028 997 2348 | (004 997 2248) | 1 | GRUP DURDURUCU KAPAK ORİNGİ | O-RING | 100X3mm | | ♦ | ♦ | ♦ |
| 27 | K21.04192 | 406 337 0252 | | 1 | GRUP MİLİ ÖN BİLYA RAYNELİ | THRUST WASHER | 0,10mm | | ♦ | ♦ | ♦ |
| 27 | K21.04150 | 406 337 0352 | | 1 | GRUP MİLİ ÖN BİLYA RAYNELİ | THRUST WASHER | 0,20mm | | ♦ | ♦ | ♦ |
| 27 | K21.94150 | | | 1 | GRUP MİLİ ÖN BİLYA RAYNELİ | THRUST WASHER | 0,25mm | | ♦ | ♦ | ♦ |
| 27 | K21.04338 | 406 337 0452 | | 1 | GRUP MİLİ ÖN BİLYA RAYNELİ | THRUST WASHER | 0,30mm | | ♦ | ♦ | ♦ |
| 27 | K21.04196 | 389 263 5352 | (389 263 3252) | 1 | GRUP MİLİ ÖN BİLYA RAYNELİ | THRUST WASHER | 0,40mm | | ♦ | ♦ | ♦ |

NOTES :
Parts encoded alphabetic and numaric are used together.

NOTLAR :
Alfabetik ve rakam ile kodlanan parçalar birlikte kullanılır.





Original parts names, oem numbers, symbols and descriptions used in this catalogue are for reference purposes only.

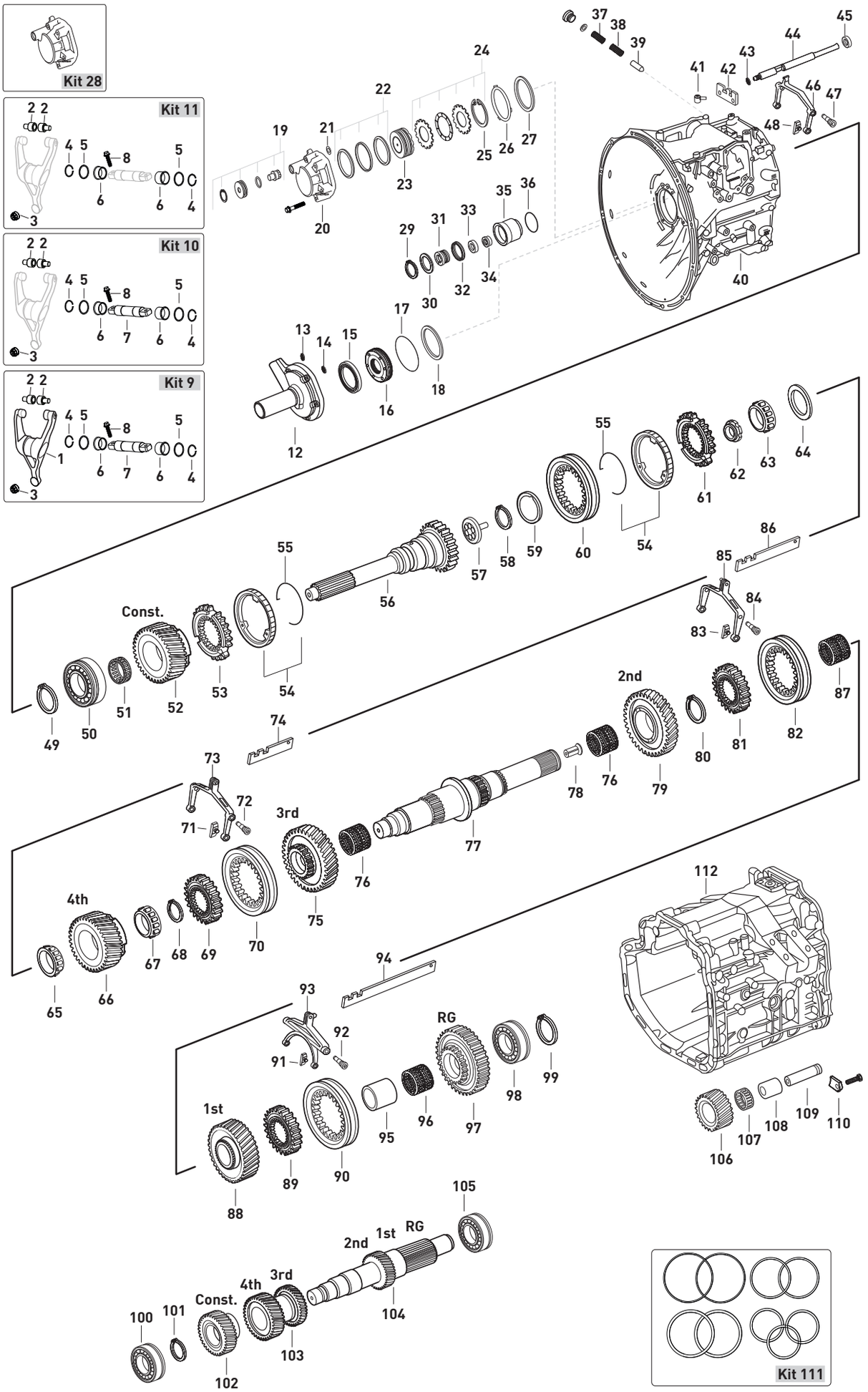




Original parts names, oem numbers, symbols and descriptions used in this catalogue are for reference purposes only.

| Fig. | Kacmaz No | Oem No | Oem Old No | Pcs. | Ürün Tanımı | Description | Sizes | Not | 715525 | 715529 | 715531 |
|---|---|---|---|---|---|---|---|---|---|---|---|
| 27 | K21.04194 | 389 263 3352 | | 1 | GRUP MİLİ ÖN BİLYA RAYNELİ | THRUST WASHER | 0,45mm | | ♦ | ♦ | ♦ |
| 27 | K21.06719 | 389 263 5652 | | 1 | GRUP MİLİ ÖN BİLYA RAYNELİ | THRUST WASHER | 0,49mm | | ♦ | ♦ | ♦ |
| 27 | K21.04197 | 389 263 5852 | (389 263 3552) | 1 | GRUP MİLİ ÖN BİLYA RAYNELİ | THRUST WASHER | 0,55mm | | ♦ | ♦ | ♦ |
| 27 | K21.04340 | 389 263 6052 | | 1 | GRUP MİLİ ÖN BİLYA RAYNELİ | THRUST WASHER | 0,61mm | | ♦ | ♦ | ♦ |
| 27 | K21.04198 | 389 263 6352 | (389 263 3852) | 1 | GRUP MİLİ ÖN BİLYA RAYNELİ | THRUST WASHER | 0,70mm | | ♦ | ♦ | ♦ |
| 27 | K21.04154 | 389 263 3952 | | 1 | GRUP MİLİ ÖN BİLYA RAYNELİ | THRUST WASHER | 0,75mm | | ♦ | ♦ | ♦ |
| 27 | K21.04199 | 389 263 6852 | | 1 | GRUP MİLİ ÖN BİLYA RAYNELİ | THRUST WASHER | 0,85mm | | ♦ | ♦ | ♦ |
| 27 | K21.04200 | 389 263 7352 | | 1 | GRUP MİLİ ÖN BİLYA RAYNELİ | THRUST WASHER | 1,00mm | | ♦ | ♦ | ♦ |
| 27 | K21.04201 | 389 263 7852 | | 1 | GRUP MİLİ ÖN BİLYA RAYNELİ | THRUST WASHER | 1,15mm | | ♦ | ♦ | ♦ |
| 27 | K21.04202 | 389 263 8352 | | 1 | GRUP MİLİ ÖN BİLYA RAYNELİ | THRUST WASHER | 1,30mm | | ♦ | ♦ | ♦ |
| 28 | K21.06487 | | | 1 | GRUP DURDURUCU KAPAĞI KOMPLE | REPAIR KIT | | | ♦ | ♦ | ♦ |
| 29 | | 006 994 4241 | (000472 065001) | 1 | TAKVİYE PİSTON SEKMANI | RETAINING RING | 65X2,5mm | | ♦ | ♦ | ♦ |
| 30 | K21.04233 | 389 262 2555 | | 1 | TAKVİYE SİLİNDİR PULU | SPACER WASHER | 0,70mm | | ♦ | ♦ | ♦ |
| 30 | K21.04234 | 389 262 2655 | | 1 | TAKVİYE SİLİNDİR PULU | SPACER WASHER | 0,90mm | | ♦ | ♦ | ♦ |
| 30 | K21.04112 | 389 262 3254 | | 1 | TAKVİYE SİLİNDİR PULU | SPACER WASHER | 1,05mm | | ♦ | ♦ | ♦ |
| 30 | K21.04111 | 389 262 3354 | | 1 | TAKVİYE SİLİNDİR PULU | SPACER WASHER | 1,10mm | | ♦ | ♦ | ♦ |
| 30 | K21.04109 | 389 262 3554 | | 1 | TAKVİYE SİLİNDİR PULU | SPACER WASHER | 1,20mm | | ♦ | ♦ | ♦ |
| 30 | K21.04105 | 389 262 2052 | | 1 | TAKVİYE SİLİNDİR PULU | SPACER WASHER | 1,40mm | | ♦ | ♦ | ♦ |
| 30 | K21.04093 | 389 262 2355 | | 1 | TAKVİYE SİLİNDİR PULU | SPACER WASHER | 1,79mm | | ♦ | ♦ | ♦ |
| 30 | K21.04025 | 389 262 3252 | | 1 | TAKVİYE SİLİNDİR PULU | SPACER WASHER | 2,00mm | | ♦ | ♦ | ♦ |
| 30 | K21.04024 | 389 262 3352 | | 1 | TAKVİYE SİLİNDİR PULU | SPACER WASHER | 2,50mm | | ♦ | ♦ | ♦ |
| 31 | K21.06994 | 945 267 0218 | (387 267 0918) | 1 | TAKVİYE MİL PİSTONU | PISTON | | | ♦ | ♦ | ♦ |
| | | | (387 267 0618) | | | | | | | | |
| 32 | K21.03524 | 006 997 6447 | (020 997 6647) | 1 | TAKVİYE HAVA KEÇESİ | OIL SEAL | 41X48X11,5mm | | ♦ | ♦ | ♦ |
| | | | (012 997 3347) | | | | | | | | |
| 33 | K21.04178 | 387 267 0650 | (387 267 0250) | 1 | TAKVİYE SİLİNDİR BURCU | BUSHING | 34X22X8mm | | ♦ | ♦ | ♦ |
| 34 | K21.03523 | 000 267 0197 | (000 267 0397) | 1 | TAKVİYE HİLAL MİL KEÇESİ | OIL SEAL | 22X32X8mm | | ♦ | ♦ | ♦ |
| 35 | K21.06036 | 945 267 0819 | (945 267 0119) | 1 | TAKVİYE SİLİNDİR GÖVDESİ | CYLINDER | | | ♦ | ♦ | ♦ |
| | | | (945 267 0719) | | | | | | | | |
| | | | (945 267 0019) | | | | | | | | |
| 36 | K21.06534 | 022 997 4248 | | 1 | TAKVİYE SİLİNDİR ORİNGİ | O-RING | 55,6X3mm | | ♦ | ♦ | ♦ |
| 37 | K21.06015 | 387 993 4501 | | 1 | ŞANZ.TAKVİYE KİLİT FİŞEK YAYI | SPRING | 6,2X63mm | | ♦ | ♦ | ♦ |
| 38 | K21.03500 | 387 993 4401 | (387 993 2501) | 1 | KİLİT YAYI | SPRING | 9,8X63,3mm | | ♦ | ♦ | ♦ |
| 39 | K21.03492 | 389 267 1174 | (387 267 0074) | 1 | KİLİT FİŞEĞİ | PIN | | | ♦ | ♦ | ♦ |
| 40 | | 945 260 8212 | | 1 | ŞANZIMAN ÖN GÖVDE | HOUSING | | | ♦ | ♦ | ♦ |
| 40 | | 945 260 0623 | | 1 | ŞANZIMAN ÖN GÖVDE | HOUSING | | | ♦ | | |
| 41 | K21.06529 | 437 261 0082 | (945 261 0082) | 1 | ŞANZIMAN HAVALANDIRMA | CAP | | | ♦ | ♦ | ♦ |
| 42 | | 930 265 0345 | | 1 | VİTES HİLAL ÇITA KİLİTLEMESİ | GUIDE | | | ♦ | ♦ | ♦ |
| 43 | K21.04160 | 387 263 2652 | | 1 | TAKVİYE HİLAL MİL PULU | SPACER WASHER | 0,20mm | | ♦ | ♦ | ♦ |
| 43 | K21.04161 | 387 263 2752 | | 1 | TAKVİYE HİLAL MİL PULU | SPACER WASHER | 0,40mm | | ♦ | ♦ | ♦ |
| 43 | | 387 263 2852 | | 1 | TAKVİYE HİLAL MİL PULU | SPACER WASHER | 0,60mm | | ♦ | ♦ | ♦ |
| 43 | | 387 263 3052 | | 1 | TAKVİYE HİLAL MİL PULU | SPACER WASHER | 1,00mm | | ♦ | ♦ | ♦ |
| 44 | K21.07003 | 945 267 0017 | | 1 | TAKVİYE HİLAL MİLİ | GEAR SHIFT RAIL | | | ♦ | ♦ | ♦ |
| 45 | K21.04252 | 000 992 7603 | (389 267 0050) | 1 | TAKVİYE HİLAL MİL BURCU | BUSHING | 21X27X16mm | | ♦ | ♦ | ♦ |
| 46 | | 930 265 0201 | | 1 | TAKVİYE HİLALİ | GEAR SHIFT FORK | | | ♦ | ♦ | ♦ |
| 47 | K21.04307 | 960 265 0774 | (945 265 1274) | 2 | HİLAL CİVATASI | PIN | | | ♦ | ♦ | ♦ |
| | | | (945 265 2974) | | | | | | | | |
| | | | (945 265 2774) | | | | | | | | |
| 48 | K21.03431 | 960 265 0049 | (947 265 0349) | 2 | TAKVİYE HİLAL PABUCU | SLIDING PAD | | | ♦ | ♦ | ♦ |
| | | | (389 265 2749) | | | | | | | | |
| 49 | K21.04347 | 387 262 8673 | | 1 | PRİZDİREK ÖN BİLYA SEKMANI | RETAINING RING | 3,15mm | | ♦ | ♦ | ♦ |
| 49 | K21.04346 | 387 262 8773 | | 1 | PRİZDİREK ÖN BİLYA SEKMANI | RETAINING RING | 3,20mm | | ♦ | ♦ | ♦ |
| 49 | K21.07015 | 387 262 8873 | | 1 | PRİZDİREK ÖN BİLYA SEKMANI | RETAINING RING | 3,25mm | | ♦ | ♦ | ♦ |
| 49 | K21.04348 | 387 262 8973 | | 1 | PRİZDİREK ÖN BİLYA SEKMANI | RETAINING RING | 3,30mm | | ♦ | ♦ | ♦ |
| 49 | K21.07016 | 387 262 9073 | | 1 | PRİZDİREK ÖN BİLYA SEKMANI | RETAINING RING | 3,35mm | | ♦ | ♦ | ♦ |

NOTES :
Parts encoded alphabetic and numaric are used together.

NOTLAR :
Alfabetik ve rakam ile kodlanan parçalar birlikte kullanılır.





Original parts names, oem numbers, symbols and descriptions used in this catalogue are for reference purposes only.

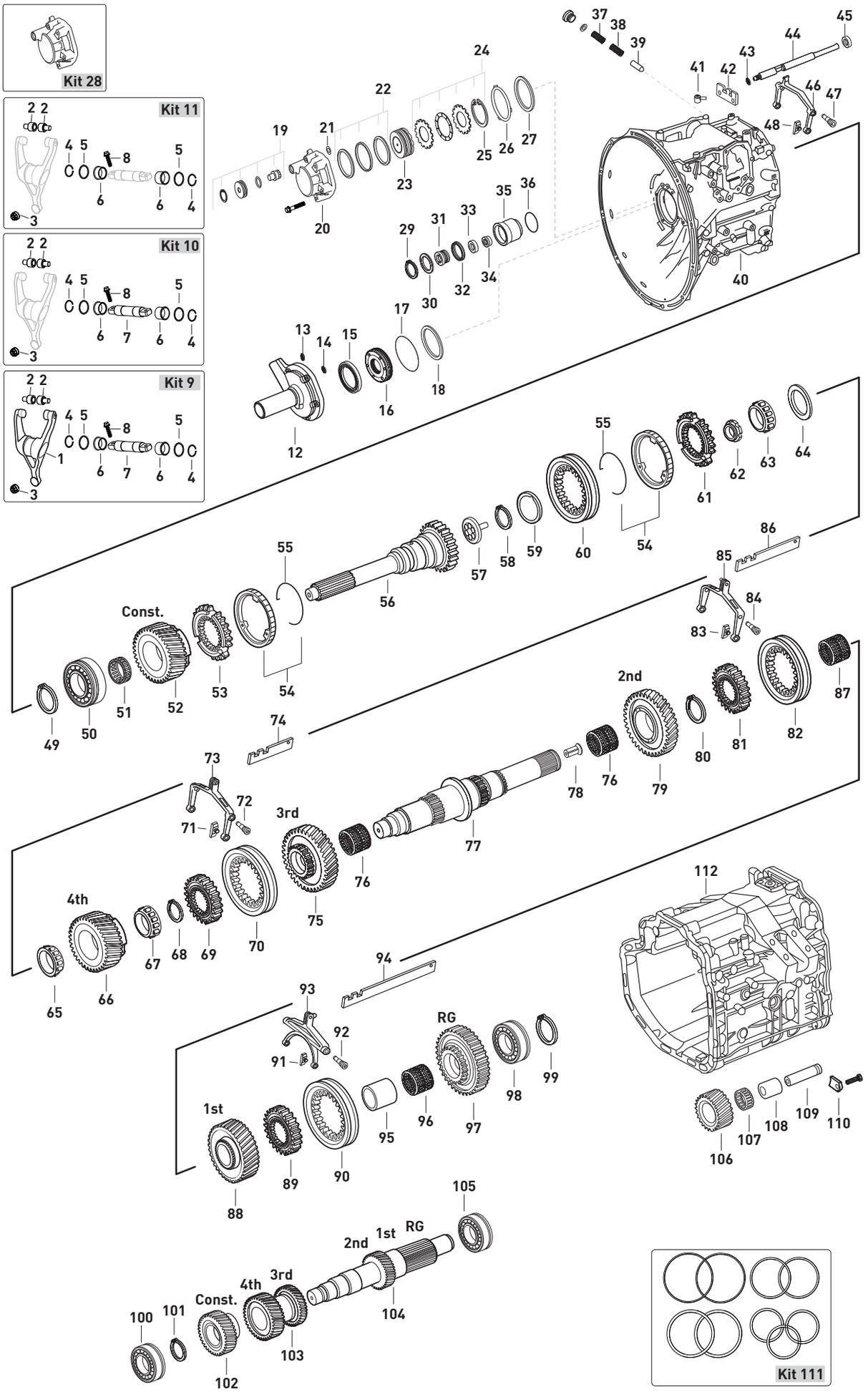




Original parts names, oem numbers, symbols and descriptions used in this catalogue are for reference purposes only.

| Fig. | Kacmaz No | Oem No | Oem Old No | Pcs. | Ürün Tanımı | Description | Sizes | Not | 715525 | 715529 | 715531 |
|---|---|---|---|---|---|---|---|---|---|---|---|
| 49 | K21.04349 | 387 262 9173 | | 1 | PRİZDİREK ÖN BİLYA SEKMANI | RETAINING RING | 3,40mm | | ♦ | ♦ | ♦ |
| 49 | K21.07017 | 387 262 9273 | | 1 | PRİZDİREK ÖN BİLYA SEKMANI | RETAINING RING | 3,45mm | | ♦ | ♦ | ♦ |
| 49 | K21.04350 | 387 262 9373 | | 1 | PRİZDİREK ÖN BİLYA SEKMANI | RETAINING RING | 3,50mm | | ♦ | ♦ | ♦ |
| 50 | K21.03618 | 011 981 1305 | (014 981 9005) | 1 | PRİZDİREK ÖN BİLYA | ROLLER BEARING | 75X140X34,25mm | | ♦ | ♦ | ♦ |
| | | | (008 981 8605) | | | | | | | | |
| | | | (008 981 2605) | | | | | | | | |
| 51 | K21.03818 | 018 981 8210 | (018 981 6410) | 1 | TAKVİYE MASURA BİLYA | NEEDLE CAGE | 84X90X39,5mm | | ♦ | ♦ | ♦ |
| 52 | K21.06325 | 930 262 3217 | (930 262 0417) | 1 | TAKVİYE DİŞLİSİ 32 DİŞ | CONSTANT GEAR 32 T. | | | ♦ | ♦ | ♦ |
| | | | (930 262 0517) | | | | | | | | |
| 53 | K21.03146 | 945 262 8234 | (945 262 5434) | 1 | TAKVİYE SENKROMENÇ | ENGAGING RING | | | ♦ | ♦ | ♦ |
| 54 | K21.03148 | 947 260 1945 | (947 260 4645) | 2 | TAKVİYE FRENLEME (Mo) | SYNCHRONIZING CONE / Mo | | | ♦ | ♦ | ♦ |
| | | | (946 262 6137) | | | | | | | | |
| 54 | K21.06299 | 947 260 3545 | (947 260 5145) | 2 | TAKVİYE FRENLEME (C) | SYNCHRONIZING CONE / C | | | ♦ | ♦ | ♦ |
| | | | (947 260 2945) | | | | | | | | |
| 55 | K21.03055 | 387 262 0893 | (387 262 0793) | 2 | FRENLEME TELİ | SPRING | | | ♦ | ♦ | ♦ |
| 56 | K21.06284 | 930 262 1003 | (930 262 0003) | 1 | PRİZDİREK 66 DİŞ | INPUT SHAFT 66 T. | | | ♦ | ♦ | ♦ |
| 57 | K21.04001 | 976 269 0034 | (960 269 0434) | 1 | PRİZDİREK YAĞ PİPETİ | OIL COLLECTOR | | | ♦ | ♦ | ♦ |
| 58 | K21.04002 | 000 994 9841 | | 1 | PRİZDİREK YAĞ PİPET SEKMANI | RETAINING RING | | | ♦ | ♦ | ♦ |
| 59 | K21.03513 | 001 262 0262 | (000 262 8662) | 1 | PRİZDİREK ARKA KEÇE | OIL SEAL | 73,5X101X7mm | | ♦ | ♦ | ♦ |
| | | | (000 262 9062) | | | | | | | | |
| 60 | K21.03151 | 945 262 6523 | (930 262 0523) | 1 | TAKVİYE HALKA | ENGAGING SLEEVE | | | ♦ | ♦ | ♦ |
| 61 | K21.03576 | 930 262 0234 | (930 262 0034) | 1 | TAKVİYE SENKROMENÇ | ENGAGING RING | | | ♦ | ♦ | ♦ |
| 62 | K21.03432 | 945 990 0250 | (945 990 0150) | 1 | KAMALI MİL SOMUNU | NUT | M30X1,5 | | ♦ | ♦ | ♦ |
| 63 | K21.03632 | 020 981 5205 | (017 981 1305) | 1 | KAMALI MİL UÇ BİLYA | ROLLER BEARING | 39,69X40,39mm | | ♦ | ♦ | ♦ |
| 64 | K21.04024 | 389 262 3352 | | 1 | KAMALI MİL AYAR PULU | THRUST WASHER | 2,50mm | | ♦ | ♦ | ♦ |
| 64 | K21.04025 | 389 262 3252 | | 1 | KAMALI MİL AYAR PULU | THRUST WASHER | 2,00mm | | ♦ | ♦ | ♦ |
| 64 | K21.04026 | 389 262 3152 | | 1 | KAMALI MİL AYAR PULU | THRUST WASHER | 1,95mm | | ♦ | ♦ | ♦ |
| 64 | K21.04027 | 389 262 3052 | | 1 | KAMALI MİL AYAR PULU | THRUST WASHER | 1,90mm | | ♦ | ♦ | ♦ |
| 64 | K21.04028 | 389 262 2952 | | 1 | KAMALI MİL AYAR PULU | THRUST WASHER | 1,85mm | | ♦ | ♦ | ♦ |
| 64 | K21.04092 | 389 262 2455 | | 1 | KAMALI MİL AYAR PULU | THRUST WASHER | 1,82mm | | ♦ | ♦ | ♦ |
| 64 | K21.04093 | 389 262 2355 | | 1 | KAMALI MİL AYAR PULU | THRUST WASHER | 1,79mm | | ♦ | ♦ | ♦ |
| 64 | K21.04094 | 389 262 2255 | | 1 | KAMALI MİL AYAR PULU | THRUST WASHER | 1,76mm | | ♦ | ♦ | ♦ |
| 64 | K21.04095 | 389 262 2155 | | 1 | KAMALI MİL AYAR PULU | THRUST WASHER | 1,73mm | | ♦ | ♦ | ♦ |
| 64 | K21.04096 | 389 262 2055 | | 1 | KAMALI MİL AYAR PULU | THRUST WASHER | 1,67mm | | ♦ | ♦ | ♦ |
| 64 | K21.04097 | 389 262 1955 | | 1 | KAMALI MİL AYAR PULU | THRUST WASHER | 1,64mm | | ♦ | ♦ | ♦ |
| 64 | K21.04098 | 389 262 1855 | | 1 | KAMALI MİL AYAR PULU | THRUST WASHER | 1,61mm | | ♦ | ♦ | ♦ |
| 64 | K21.04099 | 389 262 1755 | | 1 | KAMALI MİL AYAR PULU | THRUST WASHER | 1,58mm | | ♦ | ♦ | ♦ |
| 64 | K21.04100 | 389 262 2352 | | 1 | KAMALI MİL AYAR PULU | THRUST WASHER | 1,55mm | | ♦ | ♦ | ♦ |
| 64 | K21.04101 | 389 262 1655 | | 1 | KAMALI MİL AYAR PULU | THRUST WASHER | 1,52mm | | ♦ | ♦ | ♦ |
| 64 | K21.04102 | 389 262 1555 | | 1 | KAMALI MİL AYAR PULU | THRUST WASHER | 1,49mm | | ♦ | ♦ | ♦ |
| 64 | K21.04103 | 389 262 1455 | | 1 | KAMALI MİL AYAR PULU | THRUST WASHER | 1,46mm | | ♦ | ♦ | ♦ |
| 64 | K21.04104 | 389 262 1355 | | 1 | KAMALI MİL AYAR PULU | THRUST WASHER | 1,43mm | | ♦ | ♦ | ♦ |
| 64 | K21.04105 | 389 262 2052 | | 1 | KAMALI MİL AYAR PULU | THRUST WASHER | 1,40mm | | ♦ | ♦ | ♦ |
| 64 | K21.04106 | 389 262 1952 | | 1 | KAMALI MİL AYAR PULU | THRUST WASHER | 1,35mm | | ♦ | ♦ | ♦ |
| 64 | K21.04107 | 389 262 2754 | | 1 | KAMALI MİL AYAR PULU | THRUST WASHER | 1,30mm | | ♦ | ♦ | ♦ |
| 64 | K21.04108 | 389 262 3654 | | 1 | KAMALI MİL AYAR PULU | THRUST WASHER | 1,25mm | | ♦ | ♦ | ♦ |
| 64 | K21.04109 | 389 262 3554 | | 1 | KAMALI MİL AYAR PULU | THRUST WASHER | 1,20mm | | ♦ | ♦ | ♦ |
| 64 | K21.04110 | 389 262 3454 | | 1 | KAMALI MİL AYAR PULU | THRUST WASHER | 1,15mm | | ♦ | ♦ | ♦ |
| 64 | K21.04111 | 389 262 3354 | | 1 | KAMALI MİL AYAR PULU | THRUST WASHER | 1,10mm | | ♦ | ♦ | ♦ |
| 64 | K21.04112 | 389 262 3254 | | 1 | KAMALI MİL AYAR PULU | THRUST WASHER | 1,05mm | | ♦ | ♦ | ♦ |
| 64 | K21.04113 | 389 262 2854 | | 1 | KAMALI MİL AYAR PULU | THRUST WASHER | 0,50mm | | ♦ | ♦ | ♦ |
| 64 | K21.94113 | | | 1 | KAMALI MİL AYAR PULU | THRUST WASHER | 0,40mm | | ♦ | ♦ | ♦ |
| 64 | K21.84113 | | | 1 | KAMALI MİL AYAR PULU | THRUST WASHER | 0,30mm | | ♦ | ♦ | ♦ |
| 64 | K21.74113 | | | 1 | KAMALI MİL AYAR PULU | THRUST WASHER | 0,20mm | | ♦ | ♦ | ♦ |
| 64 | K21.64113 | | | 1 | KAMALI MİL AYAR PULU | THRUST WASHER | 0,10mm | | ♦ | ♦ | ♦ |

NOTES :
Parts encoded alphabetic and numaric are used together.

NOTLAR :
Alfabetik ve rakam ile kodlanan parçalar birlikte kullanılır.





Original parts names, oem numbers, symbols and descriptions used in this catalogue are for reference purposes only.

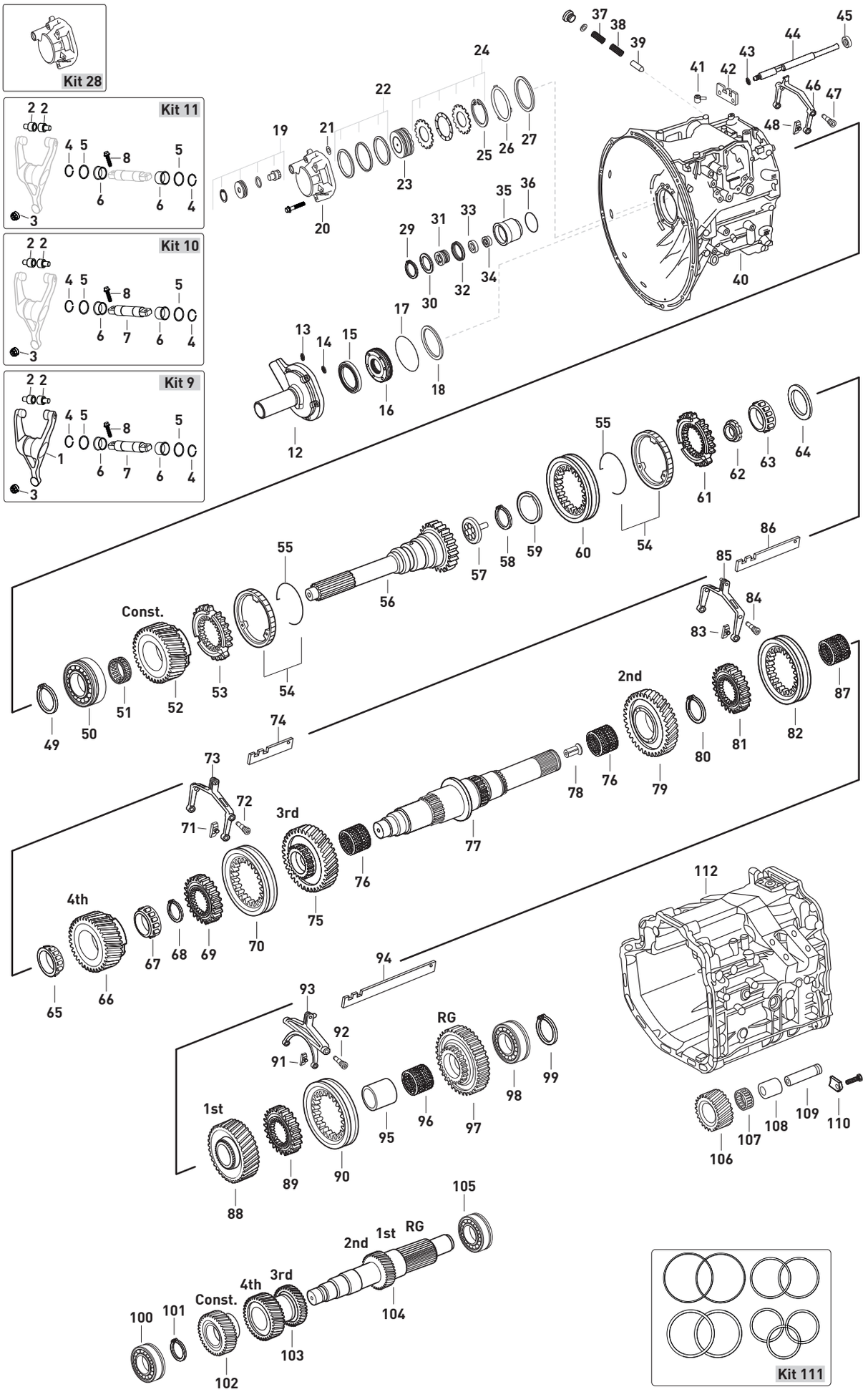




Original parts names, oem numbers, symbols and descriptions used in this catalogue are for reference purposes only.

| Fig. | Kacmaz No | Oem No | Oem Old No | Pcs. | Ürün Tanımı | Description | Sizes | Not | 715525 | 715529 | 715531 |
|---|---|---|---|---|---|---|---|---|---|---|---|
| 65 | K21.03620 | 017 981 5105 | (015 981 6105) | 1 | 3.VİTES DİŞLİ ÖN BİLYA | ROLLER BEARING | 50X41,3mm | | ♦ | ♦ | ♦ |
| | | | (014 981 2605) | | | | | | | | |
| 66 | K21.06326 | 930 262 2417 | | 1 | 4.VİTES DİŞLİSİ 36 DİŞ | GEAR 4th 36 T | | | ♦ | ♦ | ♦ |
| 67 | K21.03622 | 015 981 6205 | (015 981 8105) | 1 | 4.VİTES DİŞLİSİ ARKA BİLYA | ROLLER BEARING | 55X29,8mm | | ♦ | ♦ | ♦ |
| | | | (011 981 4505) | | | | | | | | |
| 68 | K21.04343 | 387 262 2073 | | 1 | 3./4.VİTES YILDIZ DİŞLİ SEKMANI | RETAINING RING | 2,40mm | | ♦ | ♦ | ♦ |
| 68 | K21.06687 | 387 262 2173 | | 1 | 3./4.VİTES YILDIZ DİŞLİ SEKMANI | RETAINING RING | 2,45mm | | ♦ | ♦ | ♦ |
| 68 | K21.04342 | 007 994 0041 | (387 262 2273) | 1 | 3./4.VİTES YILDIZ DİŞLİ SEKMANI | RETAINING RING | 2,50mm | | ♦ | ♦ | ♦ |
| 68 | K21.04359 | 387 262 2373 | | 1 | 3./4.VİTES YILDIZ DİŞLİ SEKMANI | RETAINING RING | 2,55mm | | ♦ | ♦ | ♦ |
| 68 | K21.04345 | 387 262 2473 | | 1 | 3./4.VİTES YILDIZ DİŞLİ SEKMANI | RETAINING RING | 2,60mm | | ♦ | ♦ | ♦ |
| 68 | K21.07021 | 387 262 2573 | | 1 | 3./4.VİTES YILDIZ DİŞLİ SEKMANI | RETAINING RING | 2,65mm | | ♦ | ♦ | ♦ |
| 68 | K21.04344 | 387 262 7973 | | 1 | 3./4.VİTES YILDIZ DİŞLİ SEKMANI | RETAINING RING | 2,70mm | | ♦ | ♦ | ♦ |
| 68 | K21.07022 | 387 262 8073 | | 1 | 3./4.VİTES YILDIZ DİŞLİ SEKMANI | RETAINING RING | 2,75mm | | ♦ | ♦ | ♦ |
| 68 | K21.06588 | 387 262 8173 | | 1 | 3./4.VİTES YILDIZ DİŞLİ SEKMANI | RETAINING RING | 2,80mm | | ♦ | ♦ | ♦ |
| 69 | K21.03581 | 960 262 3135 | (945 262 3635) | 1 | 3./4.VİTES YILDIZ DİŞLİ | SYNCHRONIZER HUB | | | ♦ | ♦ | ♦ |
| | | | (960 262 2235) | | | | | | | | |
| | | | (930 262 0835) | | | | | | | | |
| 70 | K21.03582 | 960 262 1523 | (930 262 0123) | 1 | 3./4.VİTES HALKASI | ENGAGING SLEEVE | | | ♦ | ♦ | ♦ |
| | | | (930 262 0723) | | | | | | | | |
| | | | (945 262 5223) | | | | | | | | |
| 71 | K21.03565 | 947 265 0449 | | 2 | 3./4.VİTES HİLAL PABUCU | SLIDING PAD | | | ♦ | ♦ | ♦ |
| 72 | K21.04307 | 960 265 0774 | (945 265 1274) | 2 | HİLAL CİVATASI | PIN | | | ♦ | ♦ | ♦ |
| | | | (945 265 2974) | | | | | | | | |
| | | | (945 265 2774) | | | | | | | | |
| 73 | | 930 260 0130 | | 1 | 3./4.VİTES HİLALİ | GEAR SHIFT FORK 3rd/4th | | | ♦ | ♦ | ♦ |
| 74 | | 945 265 3204 | (945 265 0404) | 1 | 3./4.VİTES HİLAL ÇITASI | SHIFTING ROD 3rd/4th | | | ♦ | ♦ | ♦ |
| 75 | K21.06327 | 930 262 0513 | (930 262 0013) | 1 | 3.VİTES DİŞLİSİ 29 DİŞ | GEAR 3rd 29 T | | | ♦ | ♦ | ♦ |
| | | | (930 262 0113) | | | | | | | | |
| | | | (930 262 0213) | | | | | | | | |
| 76 | K21.03810 | 018 981 6610 | (010 981 5310) | 2 | 2./3.VİTES MASURA BİLYA | NEEDLE CAGE | 85X93X53mm | | ♦ | ♦ | ♦ |
| 77 | K21.06358 | 930 262 1005 | | 1 | KAMALI MİL | MAIN SHAFT | | (1) | ♦ | ♦ | ♦ |
| 77 | K21.06264 | 930 262 0605 | (930 262 0305) | 1 | KAMALI MİL | MAIN SHAFT | | (2) | ♦ | ♦ | |
| 78 | K21.04364 | 001 990 2759 | | 1 | KAMALI MİL YAĞ BORUSU | OIL PIPE | | | ♦ | ♦ | ♦ |
| 79 | K21.06043 | 945 262 6812 | | 1 | 2.VİTES DİŞLİSİ 39 DİŞ | GEAR 2nd 39 T | | | ♦ | ♦ | ♦ |
| 80 | K21.04343 | 387 262 2073 | | 1 | 1./2.VİTES YILDIZ DİŞLİ SEKMANI | RETAINING RING | 2,40mm | | ♦ | ♦ | ♦ |
| 80 | K21.06687 | 387 262 2173 | | 1 | 1./2.VİTES YILDIZ DİŞLİ SEKMANI | RETAINING RING | 2,45mm | | ♦ | ♦ | ♦ |
| 80 | K21.04342 | 007 994 0041 | (387 262 2273) | 1 | 1./2.VİTES YILDIZ DİŞLİ SEKMANI | RETAINING RING | 2,50mm | | ♦ | ♦ | ♦ |
| 80 | K21.04359 | 387 262 2373 | | 1 | 1./2.VİTES YILDIZ DİŞLİ SEKMANI | RETAINING RING | 2,55mm | | ♦ | ♦ | ♦ |
| 80 | K21.04345 | 387 262 2473 | | 1 | 1./2.VİTES YILDIZ DİŞLİ SEKMANI | RETAINING RING | 2,60mm | | ♦ | ♦ | ♦ |
| 80 | K21.07021 | 387 262 2573 | | 1 | 1./2.VİTES YILDIZ DİŞLİ SEKMANI | RETAINING RING | 2,65mm | | ♦ | ♦ | ♦ |
| 80 | K21.04344 | 387 262 7973 | | 1 | 1./2.VİTES YILDIZ DİŞLİ SEKMANI | RETAINING RING | 2,70mm | | ♦ | ♦ | ♦ |
| 80 | K21.07022 | 387 262 8073 | | 1 | 1./2.VİTES YILDIZ DİŞLİ SEKMANI | RETAINING RING | 2,75mm | | ♦ | ♦ | ♦ |
| 80 | K21.06588 | 387 262 8173 | | 1 | 1./2.VİTES YILDIZ DİŞLİ SEKMANI | RETAINING RING | 2,80mm | | ♦ | ♦ | ♦ |
| 81 | K21.03581 | 960 262 3135 | (945 262 3635) | 1 | 1./2.VİTES YILDIZ DİŞLİ | SYNCHRONIZER HUB | | | ♦ | ♦ | ♦ |
| | | | (960 262 2235) | | | | | | | | |
| | | | (930 262 0835) | | | | | | | | |
| 82 | K21.03582 | 960 262 1523 | (930 262 0123) | 1 | 1./2.VİTES HALKASI | ENGAGING SLEEVE | | | ♦ | ♦ | ♦ |
| | | | (930 262 0723) | | | | | | | | |
| | | | (945 262 5223) | | | | | | | | |
| 83 | K21.03565 | 947 265 0449 | | 2 | 1./2.VİTES HİLAL PABUCU | SLIDING PAD | | | ♦ | ♦ | ♦ |
| 84 | K21.04307 | 960 265 0774 | (945 265 1274) | 2 | HİLAL CİVATASI | PIN | | | ♦ | ♦ | ♦ |
| | | | (945 265 2974) | | | | | | | | |
| | | | (945 265 2774) | | | | | | | | |
| 85 | | 930 260 0030 | | 1 | 1./2.VİTES HİLALİ | GEAR SHIFT FORK 1st/2nd | | | ♦ | ♦ | ♦ |
| 86 | | 945 265 3304 | (945 265 1904) | 1 | 1./2.VİTES HİLAL ÇITASI | SHIFTING ROD 1st/2nd | | | ♦ | ♦ | ♦ |

NOTES :
Parts encoded alphabetic and numaric are used together.

NOTLAR :
Alfabetik ve rakam ile kodlanan parçalar birlikte kullanılır.





Original parts names, oem numbers, symbols and descriptions used in this catalogue are for reference purposes only.

# GEARBOX G 280-16 KL / 11,07 - 0,69 OLD

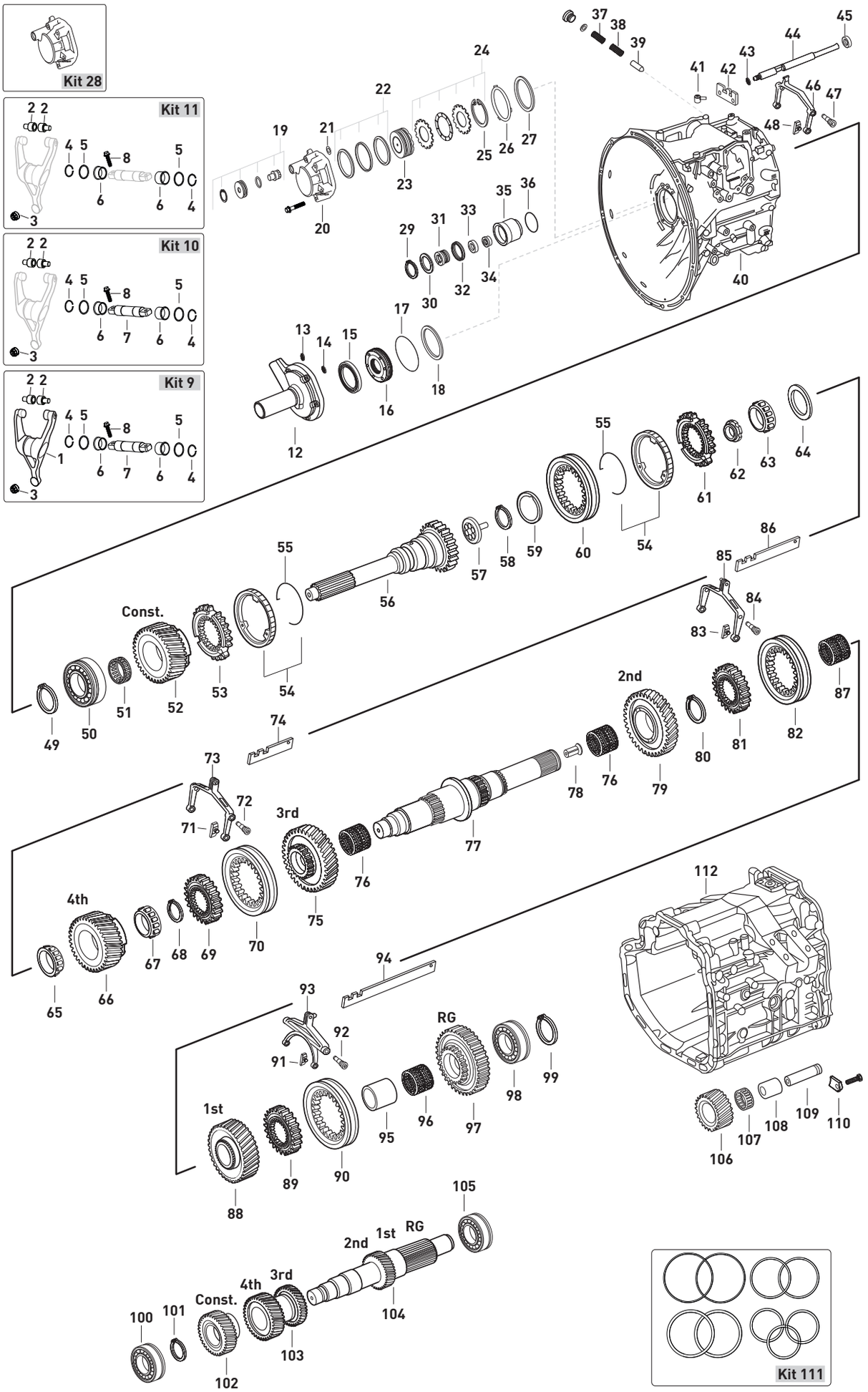




Original parts names, oem numbers, symbols and descriptions used in this catalogue are for reference purposes only.

| Fig. | Kacmaz No | Oem No | Oem Old No | Pcs. | Ürün Tanımı | Description | Sizes | Not | 715525 | 715529 | 715531 |
|---|---|---|---|---|---|---|---|---|---|---|---|
| 87 | K21.03839 | 945 981 0010 | (018 981 8110) | 1 | 1.VİTES MASURA BİLYA | NEEDLE CAGE | 75X83X48mm | | ♦ | ♦ | ♦ |
| | | | (018 981 7610) | | | | | | | | |
| 88 | K21.06240 | 930 262 1111 | (930 262 1211) | 1 | 1.VİTES DİŞLİSİ 44 DİŞ | GEAR 1st 44 T | | | ♦ | ♦ | ♦ |
| | | | (930 262 0611) | | | | | | | | |
| | | | (930 262 0211) | | | | | | | | |
| | | | (930 262 0111) | | | | | | | | |
| 89 | K21.03164 | 389 262 3935 | | 1 | GERİ VİTES YILDIZ DİŞLİ | SYNCHRONIZER HUB | | (A) | ♦ | ♦ | ♦ |
| 89 | K21.03163 | 945 262 3835 | | 1 | GERİ VİTES YILDIZ DİŞLİ | SYNCHRONIZER HUB | | (B) | ♦ | ♦ | ♦ |
| 89 | K21.06995 | 945 262 3935 | | 1 | GERİ VİTES YILDIZ DİŞLİ | SYNCHRONIZER HUB | | (C) | ♦ | ♦ | ♦ |
| 90 | K21.03061 | 389 262 1823 | (389 262 0923) | 1 | GERİ VİTES HALKASI | ENGAGING SLEEVE | | | ♦ | ♦ | ♦ |
| 91 | K21.03410 | 947 265 0249 | (945 265 0149) | 2 | GERİ VİTES HİLAL PABUCU | SLIDING PAD | | | ♦ | ♦ | ♦ |
| 92 | K21.04307 | 960 265 0774 | (945 265 1274) | 2 | HİLAL CİVATASI | PIN | | | ♦ | ♦ | ♦ |
| | | | (945 265 2974) | | | | | | | | |
| | | | (945 265 2774) | | | | | | | | |
| 93 | K21.06259 | 945 260 0430 | (945 265 0003) | 1 | GERİ VİTES HİLALİ | SHIFTING FORK RG | | | ♦ | ♦ | ♦ |
| 94 | | 945 265 1104 | (945 265 0204) | 1 | GERİ VİTES HİLAL ÇITASI | SHIFTING ROD RG | | | ♦ | ♦ | ♦ |
| 95 | K21.03112 | 389 262 2550 | (389 262 1650) | 1 | GERİ VİTES MASURA BİLYA ÇANAĞI | BEARING RACE | | (A)(B)(2) | ♦ | ♦ | ♦ |
| | | | (389 262 0050) | | | | | | | | |
| 95 | K21.03065 | 389 262 0150 | | 1 | GERİ VİTES MASURA BİLYA ÇANAĞI | BEARING RACE | | (C)(1) | ♦ | ♦ | ♦ |
| 96 | K21.03803 | 009 981 1510 | (017 981 7810) | 1 | GERİ VİTES MASURA BİLYA | NEEDLE CAGE | 78X86X35mm | (A)(B)(2) | ♦ | ♦ | ♦ |
| | | | (008 981 9310) | | | | | | | | |
| | | | (012 981 9110) | | | | | | | | |
| 96 | K21.03813 | 013 981 1810 | (013 981 2610) | 1 | GERİ VİTES MASURA BİLYA | NEEDLE CAGE | 78X86X33mm | (C)(1) | ♦ | ♦ | ♦ |
| | | | (013 981 1710) | | | | | | | | |
| 97 | K21.03168 | 945 262 3333 | (389 262 2133) | 1 | GERİ VİTES DİŞLİSİ 40 DİŞ | REVERSE GEAR 40 T. | | (A)(2) | ♦ | ♦ | ♦ |
| 97 | K21.03167 | 945 262 4433 | | 1 | GERİ VİTES DİŞLİSİ 40 DİŞ | REVERSE GEAR 40 T. | | (B)(2) | ♦ | ♦ | ♦ |
| 97 | K21.06044 | 960 262 0033 | | 1 | GERİ VİTES DİŞLİSİ 40 DİŞ | REVERSE GEAR 40 T. | | (C)(1) | ♦ | ♦ | ♦ |
| 98 | K21.03661 | 002 981 8181 | | 1 | KAMALI MİL ARKA BİLYA | ROLLER BEARING | 60X130X35,2mm | (1) | ♦ | ♦ | ♦ |
| 98 | K21.03623 | 014 981 6105 | (016 981 1305) | 1 | KAMALI MİL ARKA BİLYA | ROLLER BEARING | 60X130X33,2mm | (2) | ♦ | ♦ | ♦ |
| | | | (014 981 7505) | | | | | | | | |
| 99 | K21.04331 | 007 994 1841 | (006 994 9941) | 1 | KAMALI MİL ARKA BİLYA SEKMANI | RETAINING RING | 2,50mm | | ♦ | ♦ | ♦ |
| 100 | K21.03606 | 015 981 9005 | (014 981 1405) | 1 | GRUP MİLİ ÖN BİLYA | ROLLER BEARING | 50,80X100X35mm | | ♦ | ♦ | ♦ |
| | | | (012 981 7405) | | | | | | | | |
| | | | (012 981 5105) | | | | | | | | |
| 101 | K21.06425 | 389 994 0041 | | 1 | GRUP MİLİ ÖN BİLYA SEKMANI | RETAINING RING | 2,50mm | | ♦ | ♦ | ♦ |
| 102 | K21.06318 | 930 263 2610 | (930 263 0510) | 1 | TAKVİYE DİŞLİ KARŞILIĞI 31 DİŞ | CONSTANT GEAR 31 T. | | | ♦ | ♦ | ♦ |
| | | | (930 263 0410) | | | | | | | | |
| 103 | K21.06320 | 945 263 7313 | (945 263 5713) | 1 | TAK.VE 4.VİT.KARŞILIĞI 29/34 DİŞ | DOUBLE GEAR 29/34 T. | | | ♦ | ♦ | ♦ |
| | | | (945 263 5813) | | | | | | | | |
| 104 | K21.06322 | 930 263 0602 | | 1 | GRUP MİLİ 16/21 DİŞ | COUNTER SHAFT 16T/21 T. | | | ♦ | ♦ | ♦ |
| 104 | K21.06323 | 930 263 0202 | | 1 | GRUP MİLİ 16/21 DİŞ | COUNTER SHAFT 16T/21 T. | | | ♦ | ♦ | ♦ |
| 105 | K21.03624 | 016 981 1205 | (012 981 9405) | 1 | GRUP MİLİ ARKA BİLYA | ROLLER BEARING | 60X130X33,80mm | | ♦ | ♦ | ♦ |
| | | | (012 981 9205) | | | | | | | | |
| 106 | K21.06048 | 389 263 1031 | | 1 | KÜÇÜK GERİ VİTES DİŞLİSİ 21 DİŞ | REVERSE IDLER GEAR 21 T. | | | ♦ | ♦ | ♦ |
| 107 | K21.03838 | 012 981 8910 | (012 981 9010) | 1 | KÜÇÜK GERİ VİTES MASURA BİLYA | NEEDLE CAGE | 42X50X51mm | | ♦ | ♦ | ♦ |
| | | | (019 981 1310) | | | | | | | | |
| 108 | K21.06031 | 389 263 0850 | | 1 | K.GERİ VİTES MASURA BİLYA ÇANAĞI | BUSHING | 18mm | | ♦ | ♦ | ♦ |
| 109 | K21.06037 | 976 263 0030 | (976 263 1230) | 1 | KÜÇÜK GERİ VİTES PİMİ | PIN | | | ♦ | ♦ | ♦ |
| 110 | K21.07010 | 945 263 0041 | | 1 | K.GERİ VİTES PİM KİLİTLEMESİ | KEY | | | ♦ | ♦ | ♦ |
| 111 | K21.04317 | | | Kit | RAYNEL TAKIMI | WASHER KIT | | | ♦ | ♦ | ♦ |
| 112 | | 930 260 2811 | (945 261 4826) | 1 | ŞANZIMAN ORTA GÖVDE | HOUSING | | | ♦ | | |
| 112 | | 930 260 2511 | (945 260 8111) | 1 | ŞANZIMAN ORTA GÖVDE | HOUSING | | | ♦ | ♦ | ♦ |
| | | | (945 260 9911) | | | | | | | | |
| 112 | | 945 261 4126 | | 1 | ŞANZIMAN ORTA GÖVDE | HOUSING | | | ♦ | | |

NOTES :
Parts encoded alphabetic and numaric are used together.

NOTLAR :
Alfabetik ve rakam ile kodlanan parçalar birlikte kullanılır.





Original parts names, oem numbers, symbols and descriptions used in this catalogue are for reference purposes only.

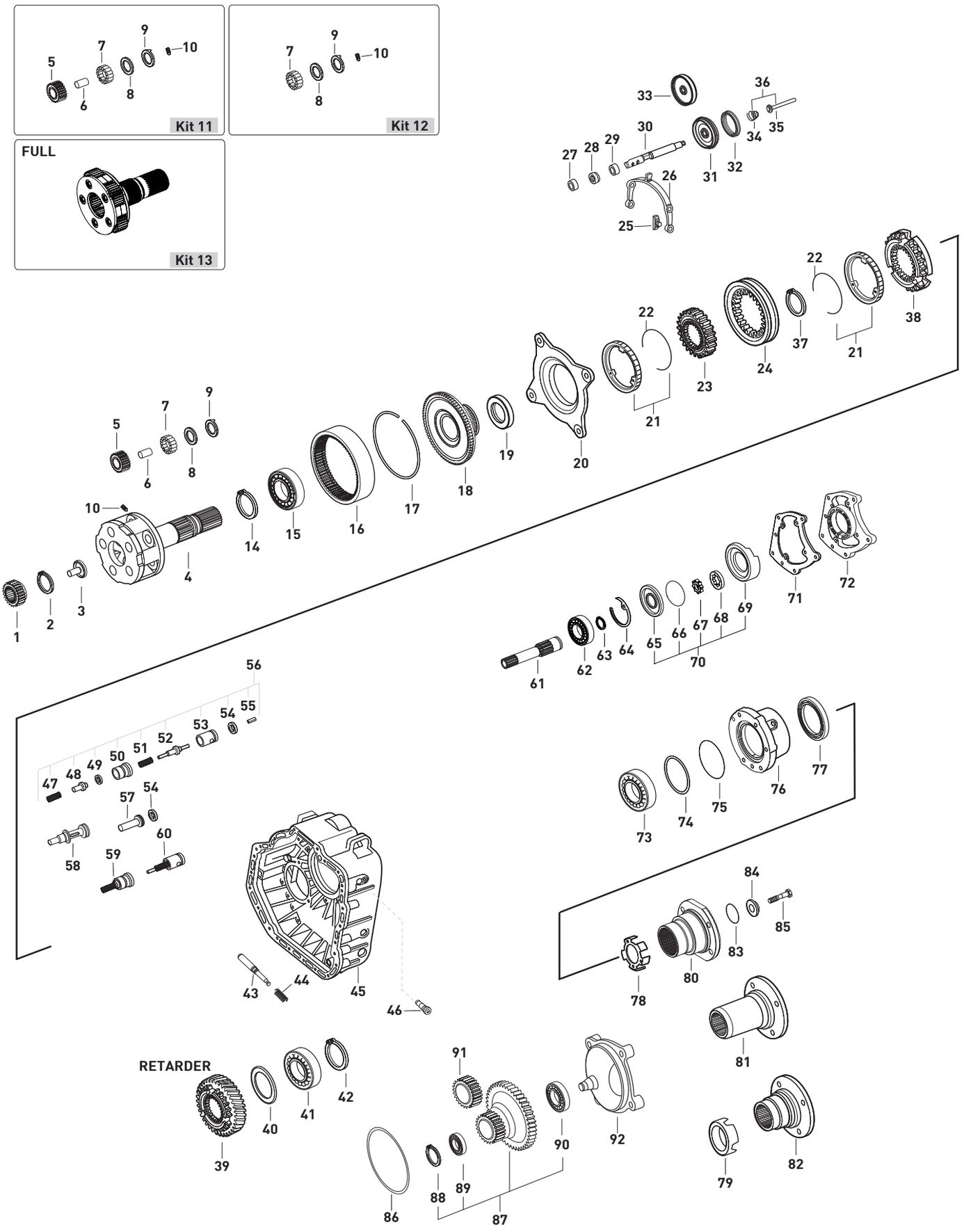






Original parts names, oem numbers, symbols and descriptions used in this catalogue are for reference purposes only.

| Fig. | Kacmaz No | Oem No | Oem Old No | Pcs. | Ürün Tanımı | Description | Sizes | Not | 715525 | 715529 | 715531 |
|---|---|---|---|---|---|---|---|---|---|---|---|
| 1 | K21.03169 | 945 262 0909 | (389 262 0809) | 1 | GÜNEŞ DİŞLİ 25 DİŞ | SUN GEAR 25 T. | | | ♦ | ♦ | ♦ |
| | | | (389 262 0909) | | | | | | | | |
| 2 | K21.04115 | 000472 060000 | | 1 | HEYKEL YAĞ PİPET SEKMANI | SNAP RING | 2,00mm | | ♦ | ♦ | ♦ |
| 3 | K21.03435 | 945 269 0834 | (389 269 4734) | 1 | ŞANZIMAN HEYKELİ YAĞ PİPETİ | OIL TUBE | | | ♦ | ♦ | ♦ |
| 4 | K21.03180 | 946 260 3561 | (946 260 3661) | 1 | ŞANZIMAN HEYKELİ (BOŞ) | PLANETARY CARRIER (EMPTY) | | | ♦ | ♦ | ♦ |
| | | | (945 260 4561) | | | | | | | | |
| | | | (945 260 4461) | | | | | | | | |
| 5 | K21.03436 | 945 262 0006 | | 5 | HEYKEL KOZA DİŞLİSİ 28 DİŞ | PLANETARY GEAR 28 T. | | | ♦ | ♦ | ♦ |
| 6 | K21.03437 | 389 262 0407 | | 5 | HEYKEL KOZA DİŞLİ PİMİ | PLANETARY GEAR PIN | | | ♦ | ♦ | ♦ |
| 7 | K21.03816 | 000 981 4186 | (000 981 4386) | 125 | HEYKEL KOZA DİŞLİ TANE BİLYA | NEEDLE ROLLER | D5X39,6 | | ♦ | ♦ | ♦ |
| 8 | K21.04074 | 389 262 0162 | (389 262 6462) | 10 | HEYKEL KOZA DİŞLİ PULU | THRUST WASHER | | | ♦ | ♦ | ♦ |
| | | | (389 262 0562) | | | | | | | | |
| 9 | K21.04075 | 945 262 1162 | (945 262 0162) | 10 | HEYKEL KOZA DİŞLİ PULU | THRUST WASHER | | | ♦ | ♦ | ♦ |
| | | | (389 262 1462) | | | | | | | | |
| 10 | K21.03418 | 000914 006109 | | 5 | HEYKEL KOZA DİŞLİ VİDASI | THREADED PIN | M6X14 | | ♦ | ♦ | ♦ |
| 11 | K21.03178 | 946 260 0097 | (655 260 0197) | Kit | HEYKEL KOZA DİŞLİ TAKIMI | PLANETARY GEAR SET | | | ♦ | ♦ | ♦ |
| 12 | K21.03663 | | | Kit | HEYKEL BİLYA VE PUL TAKIMI | WASHER KIT | | | ♦ | ♦ | ♦ |
| 13 | K21.06313 | 945 260 4661 | | Kit | ŞANZIMAN HEYKELİ (DOLU) | PLANETARY CARRIER (FULL) | | | ♦ | ♦ | ♦ |
| 14 | K21.06864 | 000472 130000 | | 1 | ÇEMBER DİŞLİ BİLYA SEKMANI | RETAINING RING | 130X4mm | | ♦ | ♦ | ♦ |
| 15 | K21.03614 | 008 981 1325 | (004 981 8725) | 1 | ÇEMBER DİŞLİ BİLYASI | ROLLER BEARING | 90X130X14mm | | ♦ | ♦ | ♦ |
| | | | (004 981 8825) | | | | | | | | |
| | | | (004 981 9425) | | | | | | | | |
| 16 | K21.03449 | 945 262 1208 | (945 262 0808) | 1 | ÇEMBER DİŞLİ 85 DİŞ | RING WHEEL 85 T. | | | ♦ | ♦ | ♦ |
| 17 | K21.04253 | 389 262 0773 | | 1 | ÇEMBER DİŞLİ SEKMANI | LOCK RING | | | ♦ | ♦ | ♦ |
| 18 | K21.03442 | 930 262 0125 | (389 262 1425) | 1 | PLANET ÇAN DİŞLİ 85 DİŞ | CARRIER HUB 85 T. | | | ♦ | ♦ | ♦ |
| 19 | K21.04076 | 389 262 0251 | | 1 | ŞANZIMAN HEYKELİ ARA PULU | SPACER RING | | | ♦ | ♦ | ♦ |
| 20 | K21.03037 | 947 260 3036 | (947 260 0836) | 1 | TABLA SENKROMENÇ | FOLLOWER RING | | | ♦ | ♦ | ♦ |
| 21 | K21.03185 | 947 260 0945 | | 2 | AĞIR SERİ FRENLEME (Mo) | SYNCHRONIZING CONE / Mo | | | ♦ | ♦ | ♦ |
| 21 | K21.06273 | 947 260 3045 | | 2 | AĞIR SERİ FRENLEME (C) | SYNCHRONIZING CONE / C | | | ♦ | ♦ | ♦ |
| 22 | K21.03077 | 389 262 0293 | | 2 | FRENLEME TELİ | SPRING | | | ♦ | ♦ | ♦ |
| 23 | K21.03079 | 389 262 4935 | (389 262 2035) | 1 | AĞIR SERİ YILDIZ DİŞLİ 73 DİŞ | SYNCHRONIZER HUB 73 T. | | | ♦ | ♦ | ♦ |
| | | | (400 262 0335) | | | | | | | | |
| 24 | K21.03033 | 945 262 6923 | (930 262 0623) | 1 | AĞIR SERİ HALKA | ENGAGING SLEEVE | | | ♦ | ♦ | ♦ |
| 25 | K21.03431 | 960 265 0049 | (947 265 0349) | 2 | AĞIR SERİ HİLAL PABUCU | SLIDING PAD | | | ♦ | ♦ | ♦ |
| | | | (389 265 2749) | | | | | | | | |
| 26 | K21.06324 | 947 265 1901 | (947 265 0901) | 1 | AĞIR SERİ HİLALİ | SHIFTING FORK | | | ♦ | ♦ | ♦ |
| 27 | K21.04254 | 000 992 7703 | (389 267 2250) | 1 | AĞIR SERİ HİLAL MİL BURCU | BUSHING | 21X25X20mm | | ♦ | ♦ | ♦ |
| 28 | K21.03523 | 000 267 0197 | (000 267 0397) | 1 | AĞIR SERİ HİLAL MİL KEÇESİ | OIL SEAL | 22X32X8mm | | ♦ | ♦ | ♦ |
| 29 | K21.04178 | 387 267 0650 | (387 267 0250) | 1 | AĞIR SERİ HİLAL MİL BURCU | BUSHING | 34x22x8mm | | ♦ | ♦ | ♦ |
| 30 | K21.06492 | 930 267 0217 | (945 267 2217) | 1 | AĞIR SERİ HİLAL MİLİ | SHIFTING ROD | | | ♦ | ♦ | ♦ |
| 30 | | 945 267 2117 | (389 267 7317) | 1 | AĞIR SERİ HİLAL MİLİ | SHIFTING ROD | | | ♦ | ♦ | ♦ |
| 30 | | 389 267 3517 | | 1 | AĞIR SERİ HİLAL MİLİ | SHIFTING ROD | | | ♦ | | |
| 31 | K21.06499 | 930 267 0618 | | 1 | AĞIR SERİ HİLAL MİL PİSTONU | PISTON | | | ♦ | ♦ | ♦ |
| 32 | K21.03525 | 024 997 8347 | (020 997 6747) | 1 | AĞIR SERİ SİLİNDİR KEÇESİ | SEAL RING | 77X90X17mm | | ♦ | ♦ | ♦ |
| | | | (014 997 3647) | | | | | | | | |
| | | | (014 997 5147) | | | | | | | | |
| 33 | K21.06497 | 960 267 0118 | | 1 | AĞIR SERİ HİLAL MİL PİSTONU | PISTON | tire sticked | | ♦ | ♦ | ♦ |
| 34 | K21.04255 | 008 993 0801 | (000 993 6705) | 1 | OKUYUCU MİL YAYI | SPRING | 9,7x7,7x8,1mm | | ♦ | ♦ | ♦ |
| 35 | K21.04257 | 000 543 5785 | | 1 | OKUYUCU MİLİ | MAGNETIC PISTON | | | ♦ | ♦ | ♦ |
| 36 | K21.07049 | 960 543 0285 | | Kit | OKUYUCU MİL-YAY TAKIMI | REPAIR KIT | | | ♦ | ♦ | ♦ |
| 37 | K21.04356 | 000471 120000 | | 1 | AĞIR SERİ YILDIZ DİŞLİ SEKMANI | RETAINING RING | | | ♦ | ♦ | ♦ |
| 38 | K21.03186 | 945 262 3834 | | 1 | SERİ SENKROMENÇ | ENGAGING RING | | | ♦ | ♦ | ♦ |
| 39 | K21.03188 | 930 264 0320 | | 1 | RETARDER DİŞLİSİ 64 DİŞ | RETARDER GEAR 64 T. | | | ♦ | | |
| 39 | K21.06058 | 930 264 0420 | | 1 | RETARDER DİŞLİSİ 59 DİŞ | RETARDER GEAR 59 T. | | | ♦ | ♦ | ♦ |
| 40 | | 387 264 0064 | | 1 | YAĞ TOPLAMA SACI | OIL BAFFLE | | | ♦ | | |

NOTES :
Parts encoded alphabetic and numaric are used together.

NOTLAR :
Alfabetik ve rakam ile kodlanan parçalar birlikte kullanılır.





Original parts names, oem numbers, symbols and descriptions used in this catalogue are for reference purposes only.

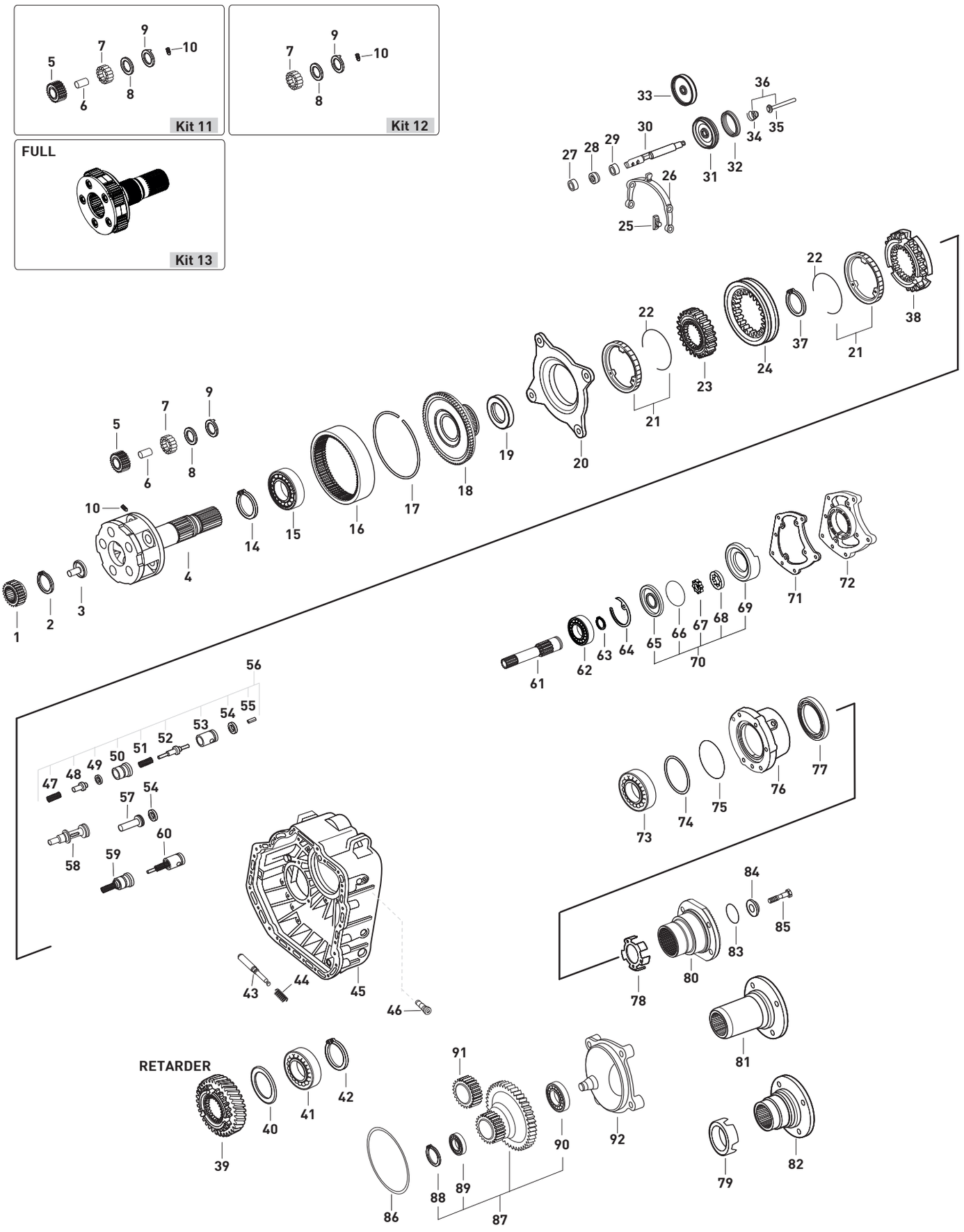






Original parts names, oem numbers, symbols and descriptions used in this catalogue are for reference purposes only.

| Fig. | Kacmaz No | Oem No | Oem Old No | Pcs. | Ürün Tanımı | Description | Sizes | Not | 715525 | 715529 | 715531 |
|---|---|---|---|---|---|---|---|---|---|---|---|
| 41 | | 007 981 8201 | (007 981 8701) | 1 | ŞANZIMAN HEYKEL BİLYASI | BEARING | 103X140X26mm | | ♦ | | |
| 42 | | 000472 140000 | | 1 | HEYKEL BİLYA SEKMANI | LOCK RING | 140X4mm | | ♦ | | |
| 43 | K21.06004 | 945 267 0274 | (389 267 0274) | 1 | AĞIR SERİ KİLİTLEME MİLİ | PIN | | | ♦ | ♦ | ♦ |
| 44 | K21.06006 | 389 993 3401 | (389 993 0601) | 1 | AĞIR SERİ KİLİTLEME YAYI | SPRING | | | ♦ | ♦ | ♦ |
| 45 | | 945 260 6812 | (945 261 4526) | 1 | ŞANZIMAN ARKA GÖVDE | HOUSING | | | ♦ | ♦ | ♦ |
| 45 | | 945 260 6912 | (945 261 4326) | 1 | ŞANZIMAN ARKA GÖVDE | HOUSING | | | ♦ | ♦ | |
| 45 | | 930 260 6011 | (930 260 1511) | 1 | ŞANZIMAN ARKA GÖVDE | HOUSING | RETARDER | | ♦ | ♦ | |
| | | | (930 260 2411) | | | | | | | | |
| 45 | | 930 260 5911 | (930 260 2311) | 1 | ŞANZIMAN ARKA GÖVDE | HOUSING | | | ♦ | | ♦ |
| | | | (930 261 1303) | | | | | | | | |
| 46 | K21.04307 | 960 265 0774 | (945 265 1274) | 2 | HİLAL CİVATASI | PIN | | | ♦ | ♦ | ♦ |
| | | | (945 265 2974) | | | | | | | | |
| | | | (945 265 2774) | | | | | | | | |
| 47 | | 389 993 5301 | | 1 | YAĞ BASINÇ YAYI | SPRING | | | ♦ | ♦ | |
| 48 | | 389 269 1026 | (389 269 0926) | 1 | YAĞ BASINÇ VALFİ | SELECTOR VALVE | | | ♦ | ♦ | |
| 49 | K21.04210 | 013 997 0148 | (020 997 8348) | 1 | YAĞ BASINÇ ORİNGİ | O-RING | 13,3X2,4mm | | ♦ | ♦ | |
| 50 | | 389 269 1444 | (389 269 0744) | 1 | YAĞ BASINÇ VALF GÖVDESİ | VALVE INSERT | | | ♦ | ♦ | |
| 51 | | 389 993 4401 | | 1 | YAĞ BASINÇ VALF MİL YAYI | SPRING | | | ♦ | ♦ | |
| 52 | | 389 269 0826 | | 1 | YAĞ BASINÇ VALF MİLİ | SELECTOR VALVE | | | ♦ | ♦ | |
| 53 | | 389 269 0844 | | 1 | YAĞ BASINÇ VALF TOPU | BALL | | | ♦ | ♦ | |
| 54 | K21.04212 | 013 997 0048 | (020 997 8248) | 1 | YAĞ BASINÇ VALF ORİNGİ | O-RING | 19,2X3mm | | ♦ | ♦ | |
| 55 | | 001481 004001 | (001481 004049) | 1 | EMNİYET PİMİ | CLAMPING SLEEVE | | | ♦ | ♦ | |
| 56 | K21.06962 | 655 260 0157 | | Kit | YAĞ BASINÇ VALFİ KOMPLE | VALVE KIT | | | ♦ | ♦ | |
| 57 | K21.06979 | 389 265 0176 | (389 265 0076) | 1 | YAĞ BASINÇ VALFİ ALIN FİBERİ | WASHER | | | ♦ | | |
| 58 | | 960 260 3257 | (960 260 1157) | 1 | YAĞ BASINÇ VALFİ ALIN FİBERİ | WASHER | | | ♦ | | |
| 59 | K21.06953 | 960 260 1057 | | Kit | YAĞ BASINÇ VALFİ KOMPLE | VALVE KIT | | | ♦ | ♦ | ♦ |
| 59 | K21.06988 | 960 260 2257 | | Kit | YAĞ BASINÇ VALFİ KOMPLE | VALVE KIT | | | ♦ | ♦ | ♦ |
| 60 | K21.06973 | 960 260 1257 | | Kit | YAĞ BASINÇ VALFİ KOMPLE | VALVE KIT | | | ♦ | ♦ | ♦ |
| 61 | K21.03198 | 947 269 1010 | (945 269 1010) | 1 | YAĞ POMPA MİLİ | OIL PUMP SHAFT | | | ♦ | ♦ | ♦ |
| 61 | K21.06298 | 947 269 1110 | (945 269 1110) | 1 | YAĞ POMPA MİLİ | OIL PUMP SHAFT | | | ♦ | ♦ | ♦ |
| 62 | K21.03648 | 010 981 9025 | (010 981 8425) | 1 | YAĞ POMPA MİL BİLYASI | ROLLLER BEARING | 17X35X10mm | | ♦ | ♦ | ♦ |
| | | | (008 981 5425) | | | | | | | | |
| | | | (008 981 3425) | | | | | | | | |
| 63 | | 912009 045100 | | 1 | PTO MİL BİLYA SEKMANI | RETAINING RING | | | ♦ | ♦ | ♦ |
| 64 | K21.94304 | | | 1 | YAĞ POMPA PULU | SPACER WASHER | 0,70mm | | ♦ | ♦ | ♦ |
| 64 | K21.04304 | 389 262 6254 | | 1 | YAĞ POMPA PULU | SPACER WASHER | 0,80mm | | ♦ | ♦ | ♦ |
| 64 | K21.04303 | 389 262 5954 | | 1 | YAĞ POMPA PULU | SPACER WASHER | 0,90mm | | ♦ | ♦ | ♦ |
| 64 | K21.04302 | 389 262 5754 | | 1 | YAĞ POMPA PULU | SPACER WASHER | 1,00mm | | ♦ | ♦ | ♦ |
| 64 | K21.04301 | 389 262 5554 | | 1 | YAĞ POMPA PULU | SPACER WASHER | 1,10mm | | ♦ | ♦ | ♦ |
| 64 | K21.04305 | 389 262 5354 | | 1 | YAĞ POMPA PULU | SPACER WASHER | 1,20mm | | ♦ | ♦ | ♦ |
| 65 | K21.03412 | 945 269 0201 | (389 269 2501) | 1 | YAĞ POMPA KAPAĞI | OIL PUMP COVER | | | ♦ | ♦ | ♦ |
| 66 | K21.03511 | 029 997 5748 | | 1 | YAĞ POMPA ORİNGİ | O-RING | 112X2,5mm | | ♦ | ♦ | ♦ |
| 67 | K21.03413 | 389 269 1406 | (389 269 1506) | 1 | YAĞ POMPA İÇ ROTOR | OIL PUMP GEAR | | | ♦ | ♦ | ♦ |
| | | | (945 260 0090) | | | | | | | | |
| 68 | K21.03414 | 389 269 0706 | (389 269 1206) | 1 | YAĞ POMPA DIŞ ROTOR | ROTOR | | | ♦ | ♦ | ♦ |
| 69 | K21.03478 | 947 269 1001 | | 1 | YAĞ POMPA GÖVDESİ | OIL PUMP HOUSING | | | ♦ | ♦ | ♦ |
| 70 | K21.03475 | 389 260 0790 | | 1 | YAĞ POMPASI | OIL PUMP | | | ♦ | ♦ | ♦ |
| 71 | K21.03667 | 945 261 0680 | (945 261 0580) | 1 | PTO KAPAK CONTASI | GASKET | | | ♦ | ♦ | ♦ |
| | | | (945 261 0080) | | | | | | | | |
| 72 | K21.03566 | 945 261 1033 | (945 261 1433) | 1 | PTO KAPAĞI | COVER | | | ♦ | ♦ | ♦ |
| | | | (400 261 1133) | | | | | | | | |
| 73 | K21.03625 | 008 981 3025 | (008 981 5225) | 1 | ŞANZIMAN ARKA BİLYA | ROLLER BEARING | 80X150X28mm | | ♦ | ♦ | ♦ |
| | | | (007 981 3325) | | | | | | | | |
| 74 | K21.04081 | 389 262 7754 | | 1 | ŞANZIMAN HEYKEL AYAR PULU | THRUST WASHER | 1,40mm | | ♦ | ♦ | ♦ |
| 74 | K21.04139 | 389 262 5152 | | 1 | ŞANZIMAN HEYKEL AYAR PULU | THRUST WASHER | 0,80mm | | ♦ | ♦ | ♦ |

NOTES :
Parts encoded alphabetic and numaric are used together.

NOTLAR :
Alfabetik ve rakam ile kodlanan parçalar birlikte kullanılır.





Original parts names, oem numbers, symbols and descriptions used in this catalogue are for reference purposes only.

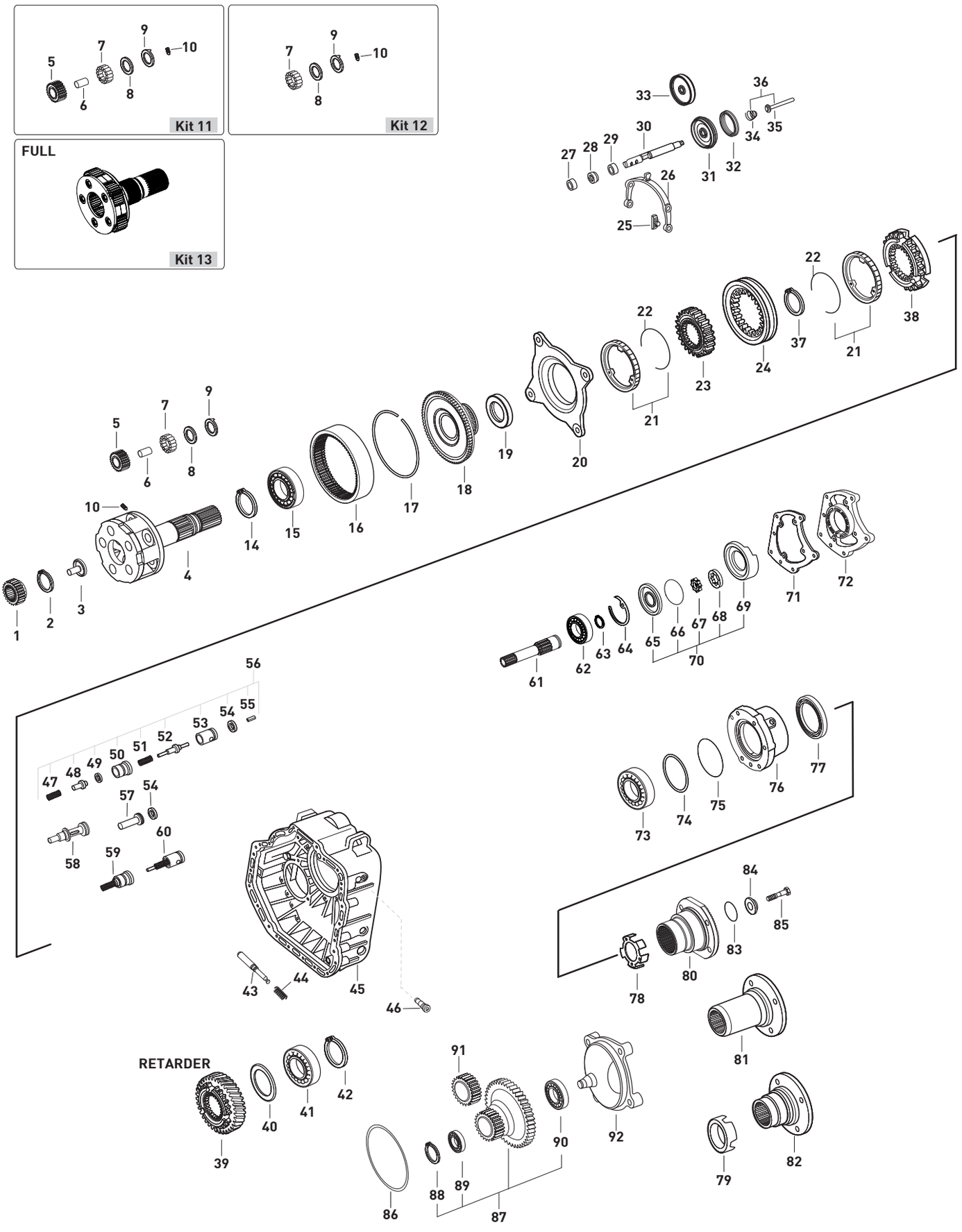






Original parts names, oem numbers, symbols and descriptions used in this catalogue are for reference purposes only.

| Fig. | Kacmaz No | Oem No | Oem Old No | Pcs. | Ürün Tanımı | Description | Sizes | Not | 715525 | 715529 | 715531 |
|---|---|---|---|---|---|---|---|---|---|---|---|
| 74 | K21.04080 | 389 262 5052 | | 1 | ŞANZIMAN HEYKEL AYAR PULU | THRUST WASHER | 0,40mm | | ♦ | ♦ | ♦ |
| 74 | K21.04079 | 389 262 7654 | | 1 | ŞANZIMAN HEYKEL AYAR PULU | THRUST WASHER | 0,25mm | | ♦ | ♦ | ♦ |
| 74 | K21.04140 | 389 262 4952 | | 1 | ŞANZIMAN HEYKEL AYAR PULU | THRUST WASHER | 0,20mm | | ♦ | ♦ | ♦ |
| 74 | K21.04141 | 389 262 4852 | | 1 | ŞANZIMAN HEYKEL AYAR PULU | THRUST WASHER | 0,15mm | | ♦ | ♦ | ♦ |
| 74 | K21.04078 | 389 262 4752 | | 1 | ŞANZIMAN HEYKEL AYAR PULU | THRUST WASHER | 0,10mm | | ♦ | ♦ | ♦ |
| 75 | K21.06713 | 015 997 2848 | (020 997 8548) | 1 | ŞANZIMAN ARKA KAPAK ORİNGİ | O-RING | 149,5X3mm | | ♦ | ♦ | ♦ |
| 76 | K21.06238 | 389 261 1920 | (389 261 2020) | 1 | ŞANZIMAN ARKA KAPAK | COVER | | | ♦ | ♦ | ♦ |
| 76 | K21.06239 | 930 261 0420 | (930 261 0520) | 1 | ŞANZIMAN ARKA KAPAK | COVER | | RETARDER | ♦ | ♦ | ♦ |
| | | | (389 261 1820) | | | | | | | | |
| 77 | K21.03512 | 015 997 7846 | (023 997 1647) | 1 | ŞANZIMAN ARKA KEÇE | OIL SEAL | 95X115X15,5mm | | ♦ | ♦ | ♦ |
| 78 | K21.04134 | 930 262 0028 | | 1 | ŞANZIMAN KM DEVİR SACI | PULSE STAR | | (A) | ♦ | | |
| 78 | | 945 262 0228 | | 1 | ŞANZIMAN KM DEVİR SACI | PULSE STAR | | (B) | ♦ | | |
| 78 | K21.06947 | 930 262 1428 | (930 262 0128) | 1 | ŞANZIMAN KM DEVİR SACI | PULSE STAR | | (C) | ♦ | ♦ | ♦ |
| 79 | | 945 262 0528 | (389 260 0150) | 1 | ŞANZIMAN KM DEVİR SACI | PULSE STAR | | (D) | ♦ | | |
| 80 | K21.03084 | 389 262 0445 | | 1 | ŞANZIMAN FLANŞI | COMPANION FLANGE | 4-H, Ø180mm | (D) | ♦ | ♦ | ♦ |
| 80 | K21.03211 | 930 262 0045 | | 1 | ŞANZIMAN FLANŞI | COMPANION FLANGE | 4-H, Ø180mm | (A)(C) | ♦ | ♦ | ♦ |
| 80 | K21.03195 | 930 262 0145 | | 1 | ŞANZIMAN FLANŞI | COMPANION FLANGE | Ø200mm | (A)(C) | ♦ | ♦ | |
| 81 | | 387 264 1945 | | 1 | ŞANZIMAN FLANŞI | COMPANION FLANGE | Ø198mm | | ♦ | | |
| 81 | | 387 264 2045 | | 1 | ŞANZIMAN FLANŞI | COMPANION FLANGE | Ø198mm | | ♦ | | |
| 81 | | 945 262 0445 | | 1 | ŞANZIMAN FLANŞI | COMPANION FLANGE | Ø200mm | | ♦ | | |
| 81 | | 945 262 0545 | | 1 | ŞANZIMAN FLANŞI | COMPANION FLANGE | Ø200mm | | ♦ | | |
| 82 | K21.03196 | 945 262 0045 | | 1 | ŞANZIMAN FLANŞI | COMPANION FLANGE | 4-H, Ø180mm | (B) | ♦ | ♦ | ♦ |
| 83 | K21.04310 | 014 997 5148 | (020 997 8648) | 1 | ŞANZIMAN FLANŞ ORİNGİ | O-RING | 72,4X5,3mm | | ♦ | ♦ | ♦ |
| 83 | | 025 997 5345 | | 1 | ŞANZIMAN FLANŞ ORİNGİ | O-RING | 70,8X5,1mm | | ♦ | ♦ | ♦ |
| 84 | K21.04214 | 945 262 0762 | | 1 | ŞANZIMAN FLANŞI ALIN PULU | THRUST WASHER | 93X20mm | (1) | ♦ | ♦ | ♦ |
| 84 | K21.06977 | 389 262 0362 | (945 262 0062) | 1 | ŞANZIMAN FLANŞI ALIN PULU | THRUST WASHER | 95X24mm | (2) | ♦ | ♦ | ♦ |
| 85 | K21.06280 | 000000 006750 | (000000 005728) | 1 | ŞANZIMAN FLANŞI ALIN VİDASI | SCREW | M20X1,5X80 | (1) | ♦ | ♦ | ♦ |
| 85 | K21.06028 | 945 990 0019 | (389 990 2019) | 1 | ŞANZIMAN FLANŞI ALIN VİDASI | SCREW | M24X85X2 | (2) | ♦ | ♦ | ♦ |
| | | | (389 990 0219) | | | | | | | | |
| 86 | | 017 997 9145 | (028 997 8148) | 1 | ŞANZIMAN ARKA KAPAK ORİNGİ | O-RING | 198X3mm | | ♦ | ♦ | |
| 87 | K21.06312 | 930 264 0821 | | 1 | DİREKSİYON POMPA DİŞLİSİ | GEAR | | | ♦ | ♦ | |
| 88 | | 000983 020000 | | 1 | DİREK.POMPA DİŞLİ BİLYA SEKMANI | RETAINING RING | | | ♦ | ♦ | |
| 89 | | 000625 006004 | | 1 | DİREKSİYON POMPA DİŞLİ ÖN BİLYA | ROLLER BEARING | | | ♦ | ♦ | |
| 90 | | 000625 506007 | | 1 | DİREKSİYON POMPA DİŞLİ ARKA BİLYA | ROLLER BEARING | | | ♦ | ♦ | |
| 91 | K21.03671 | 930 264 0721 | | 1 | DİREKSİYON POMPA DİŞLİ KARŞILIĞI | GEAR | | | ♦ | ♦ | |
| 92 | K21.06300 | 930 264 0111 | (930 264 0211) | 1 | DİREKSİYON POMPA KAPAĞI | HOUSING | | | ♦ | ♦ | |

NOTES :
Parts encoded alphabetic and numaric are used together.

NOTLAR :
Alfabetik ve rakam ile kodlanan parçalar birlikte kullanılır.





Original parts names, oem numbers, symbols and descriptions used in this catalogue are for reference purposes only.

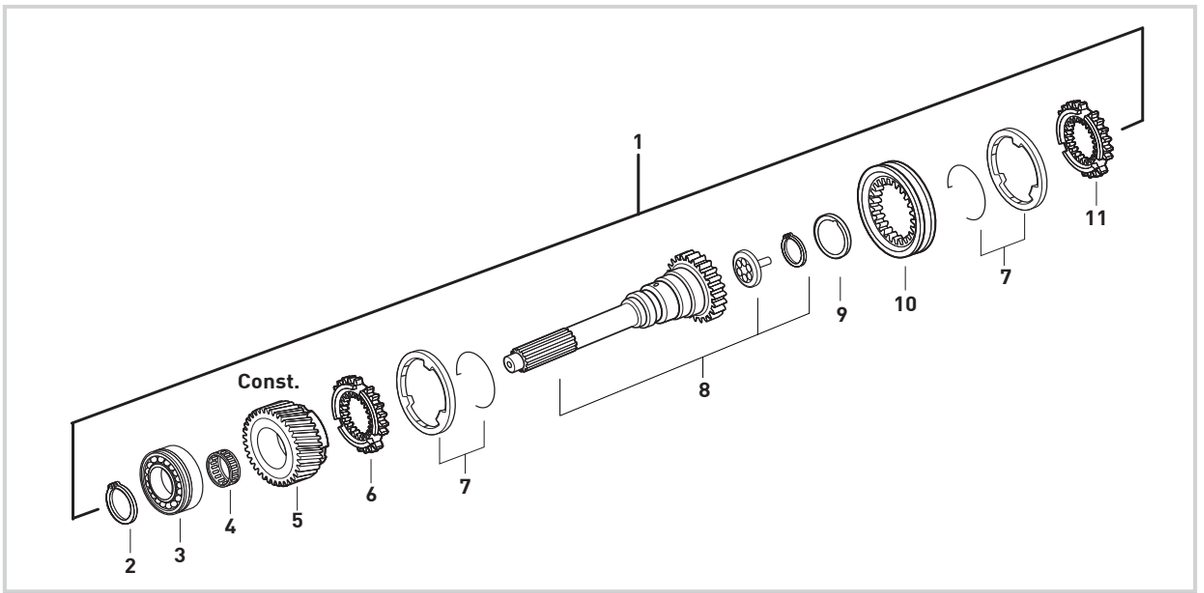


| Fig. | Kacmaz No. | Oem No | Oem Old No | Pcs. | Ürün Tanımı | Description | Sizes |
|---|---|---|---|---|---|---|---|
| 1 | K21.06395 | | | Kit | PRİZDİREK KOMPLE | INPUT SHAFT COMPLETE | |
| 2 | K21.04346 | 387 262 8773 | | 1 | PRİZDİREK ÖN BİLYA SEKMANI | RETAINING RING | 3,20mm |
| 3 | K21.03618 | 011 981 1305 | (014 981 9005) | 1 | PRİZDİREK ÖN BİLYA | ROLLER BEARING | 75X140X34,25mm |
| 4 | K21.03818 | 018 981 8210 | (018 981 6410) | 1 | TAKVİYE MASURA BİLYA | NEEDLE CAGE | 84X90X39,5mm |
| 5 | K21.06325 | 930 262 3217 | (930 262 0417) | 1 | TAKVİYE DİŞLİSİ 32 DİŞ | CONSTANT GEAR 32 T. | |
| 6 | K21.03146 | 945 262 8234 | (945 262 5434) | 1 | TAKVİYE SENKROMENÇ | ENGAGING RING | |
| 7 | K21.06299 | 947 260 3545 | (947 260 5145) | 2 | TAKVİYE FRENLEME (C) | SYNCHRONIZING CONE / C | |
| 8 | K21.06284 | 930 262 1003 | (930 262 0003) | 1 | PRİZDİREK 66 DİŞ | INPUT SHAFT 66 T. | |
| 9 | K21.03513 | 001 262 0262 | (000 262 8662) | 1 | PRİZDİREK ARKA KEÇE | OIL SEAL | 73,5X101X7mm |
| 10 | K21.03151 | 945 262 6523 | (930 262 0523) | 1 | TAKVİYE HALKA | ENGAGING SLEEVE | |
| 11 | K21.03576 | 930 262 0234 | (930 262 0034) | 1 | TAKVİYE SENKROMENÇ | ENGAGING RING | |



**Original parts names, oem numbers, symbols and descriptions used in this catalogue are for reference purposes only.**

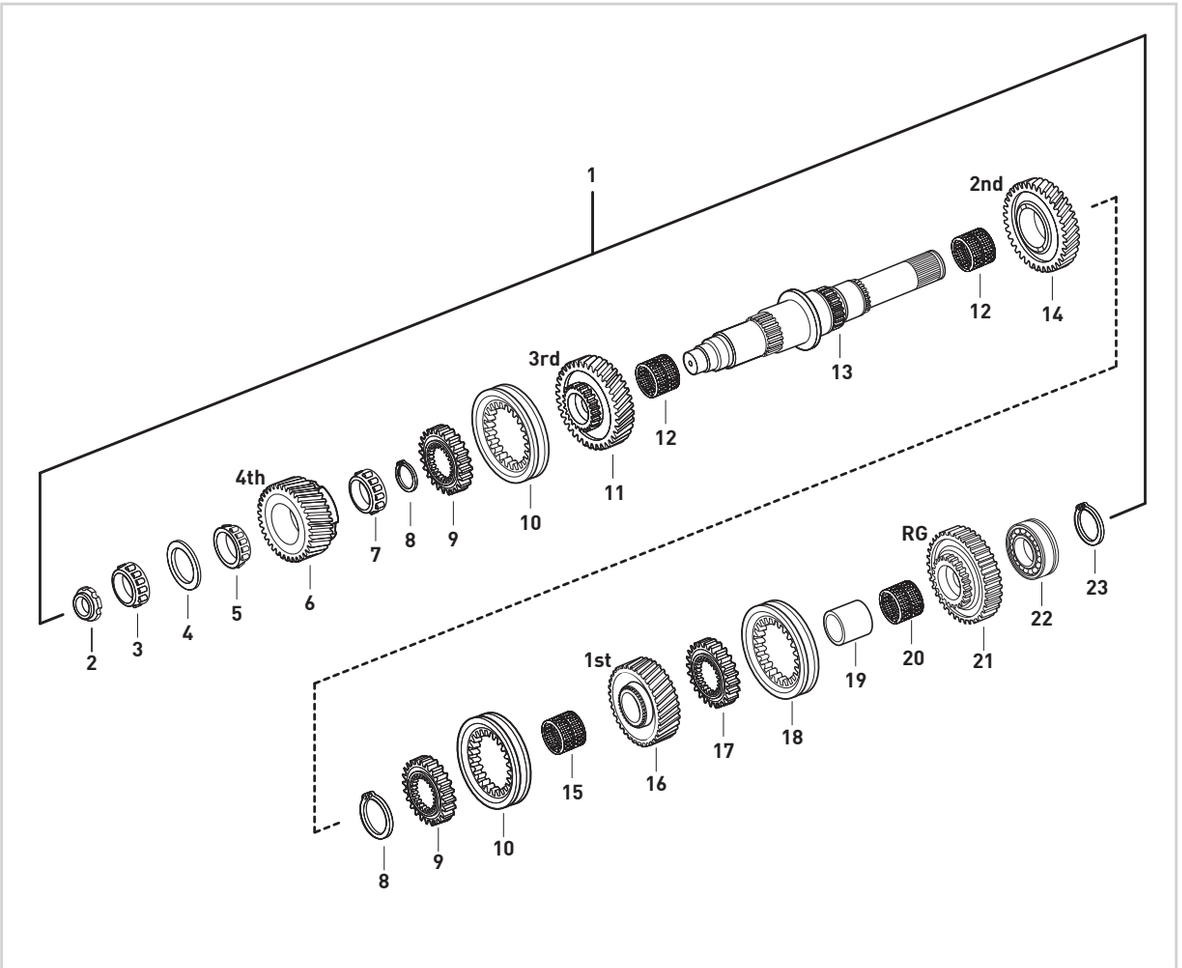


| Fig. | Kacmaz No. | Oem No | Oem Old No | Pcs. | Ürün Tanımı | Description | Sizes |
|---|---|---|---|---|---|---|---|
| 1 | K21.06360 | | | Kit | KAMALI MİL KOMPLE | MAIN SHAFT COMPLETE | |
| 2 | K21.03432 | 945 990 0250 | (945 990 0150) | 1 | KAMALI MİL SOMUNU | NUT | M30X1,5 |
| 3 | K21.03632 | 020 981 5205 | (017 981 1305) | 1 | KAMALI MİL UÇ BİLYA | ROLLER BEARING | 39,69X40,39mm |
| 4 | K21.04025 | 389 262 3252 | | 1 | KAMALI MİL AYAR PULU | THRUST WASHER | 2,00mm |
| 5 | K21.03620 | 017 981 5105 | (015 981 6105) | 1 | 3.VİTES DİŞLİ ÖN BİLYA | ROLLER BEARING | 50X41,3mm |
| 6 | K21.06326 | 930 262 2417 | | 1 | 4.VİTES DİŞLİSİ 36 DİŞ | GEAR 4th 36 T. | |
| 7 | K21.03622 | 015 981 6205 | (015 981 8105) | 1 | 4.VİTES DİŞLİSİ ARKA BİLYA | ROLLER BEARING | 55X29,8mm |
| 8 | K21.04344 | 387 262 7973 | | 2 | 1./2./3./4.VİT. YILDIZ DİŞLİ SEKMANI | RETAINING RING | 2,70mm |
| 9 | K21.03581 | 960 262 3135 | (945 262 3635) | 2 | 1./2./3./4.VİTES YILDIZ DİŞLİ | SYNCHRONIZER HUB | |
| 10 | K21.03582 | 960 262 1523 | (930 262 0123) | 2 | 1./2./3./4.VİTES HALKASI | ENGAGING SLEEVE | |
| 11 | K21.06327 | 930 262 0513 | (930 262 0013) | 1 | 3.VİTES DİŞLİSİ 29 DİŞ | GEAR 3rd 29 T. | |
| 12 | K21.03810 | 018 981 6610 | (010 981 5310) | 2 | 2./3.VİTES MASURA BİLYA | NEEDLE CAGE | 85X93X53mm |
| 13 | K21.06264 | 930 262 0605 | (930 262 0305) | 1 | KAMALI MİL | MAIN SHAFT | |
| 14 | K21.06043 | 945 262 6812 | | 1 | 2.VİTES DİŞLİSİ 39 DİŞ | GEAR 2nd 39 T. | |
| 15 | K21.03839 | 945 981 0010 | (018 981 8110) | 1 | 1.VİTES MASURA BİLYA | NEEDLE CAGE | 75X83X48mm |
| 16 | K21.06240 | 930 262 1111 | (930 262 1211) | 1 | 1.VİTES DİŞLİSİ 44 DİŞ | GEAR 1st 44 T. | |
| 17 | K21.03164 | 389 262 3935 | | 1 | GERİ VİTES YILDIZ DİŞLİ | SYNCHRONIZER HUB | |
| 18 | K21.03061 | 389 262 1823 | (389 262 0923) | 1 | GERİ VİTES HALKASI | ENGAGING SLEEVE | |
| 19 | K21.03112 | 389 262 2550 | (389 262 1650) | 1 | GERİ VİTES MASURA BİLYA ÇANAĞI | BEARING RACE | |
| 20 | K21.03803 | 009 981 1510 | (017 981 7810) | 1 | GERİ VİTES MASURA BİLYA | NEEDLE CAGE | 78X86X35mm |
| 21 | K21.03168 | 945 262 3333 | (389 262 2133) | 1 | GERİ VİTES DİŞLİSİ 40 DİŞ | REVERSE GEAR 40 T. | |
| 22 | K21.03623 | 014 981 6105 | (016 981 1305) | 1 | KAMALI MİL ARKA BİLYA | ROLLER BEARING | 60X130X33,2mm |
| 23 | K21.04331 | 007 994 1841 | (006 994 9941) | 1 | KAMALI MİL ARKA BİLYA SEKMANI | RETAINING RING | 2,50mm |



Original parts names, oem numbers, symbols and descriptions used in this catalogue are for reference purposes only.

# GEARBOX G 280 - 16 KL / 11,07 - 0,69 MAIN SHAFT COMPLETE

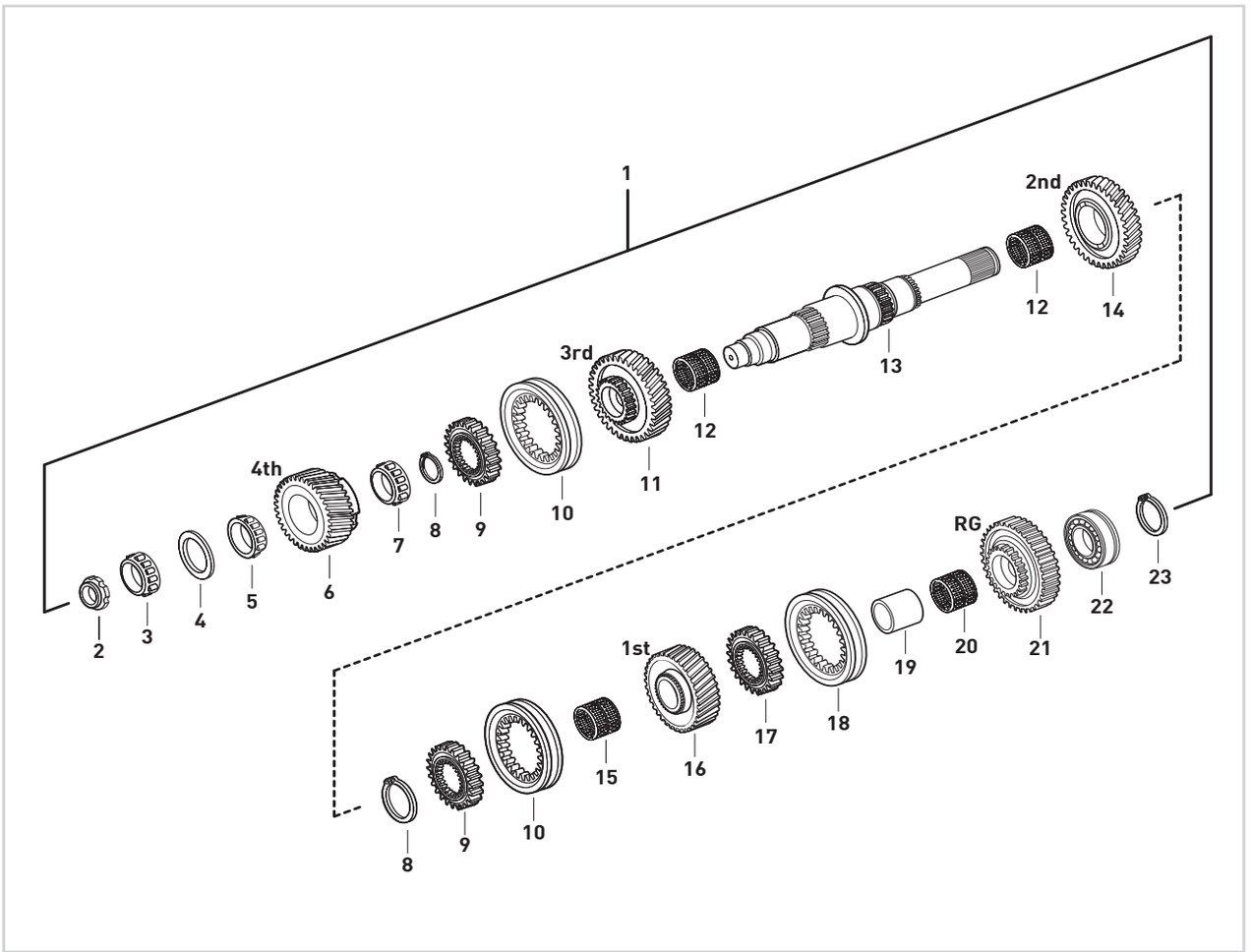


| Fig. | Kacmaz No. | Oem No | Oem Old No | Pcs. | Ürün Tanımı | Description | Sizes |
|---|---|---|---|---|---|---|---|
| 1 | K21.06359 | | | Kit | KAMALI MİL KOMPLE | MAIN SHAFT COMPLETE | |
| 2 | K21.03432 | 945 990 0250 | (945 990 0150) | 1 | KAMALI MİL SOMUNU | NUT | M30X1,5 |
| 3 | K21.03632 | 020 981 5205 | (017 981 1305) | 1 | KAMALI MİL UÇ BİLYA | ROLLER BEARING | 39,69X40,39mm |
| 4 | K21.04025 | 389 262 3252 | | 1 | KAMALI MİL AYAR PULU | THRUST WASHER | 2,00mm |
| 5 | K21.03620 | 017 981 5105 | (015 981 6105) | 1 | 3.VİTES DİŞLİ ÖN BİLYA | ROLLER BEARING | 50X41,3mm |
| 6 | K21.06326 | 930 262 2417 | | 1 | 4.VİTES DİŞLİSİ 36 DİŞ | GEAR 4th 36 T. | |
| 7 | K21.03622 | 015 981 6205 | (015 981 8105) | 1 | 4.VİTES DİŞLİSİ ARKA BİLYA | ROLLER BEARING | 55X29,8mm |
| 8 | K21.04344 | 387 262 7973 | | 2 | 3./4.VİTES YILDIZ DİŞLİ SEKMANI | RETAINING RING | 2,70mm |
| 9 | K21.03581 | 960 262 3135 | (945 262 3635) | 2 | 3./4.VİTES YILDIZ DİŞLİ | SYNCHRONIZER HUB | |
| 10 | K21.03582 | 960 262 1523 | (930 262 0123) | 2 | 3./4.VİTES HALKASI | ENGAGING SLEEVE | |
| 11 | K21.06327 | 930 262 0513 | (930 262 0013) | 1 | 3.VİTES DİŞLİSİ 29 DİŞ | GEAR 3rd 29 T. | |
| 12 | K21.03810 | 018 981 6610 | (010 981 5310) | 2 | 2./ 3.VİTES MASURA BİLYA | NEEDLE CAGE | 85X93X53mm |
| 13 | K21.06358 | 930 262 1005 | | 1 | KAMALI MİL | MAIN SHAFT | |
| 14 | K21.06043 | 945 262 6812 | | 1 | 2.VİTES DİŞLİSİ 39 DİŞ | GEAR 2nd 39 T. | |
| 15 | K21.03839 | 945 981 0010 | (018 981 8110) | 1 | 1.VİTES MASURA BİLYA | NEEDLE CAGE | 75X83X48mm |
| 16 | K21.06240 | 930 262 1111 | (930 262 1211) | 1 | 1.VİTES DİŞLİSİ 44 DİŞ | GEAR 1st 44T | |
| 17 | K21.06995 | 945 262 3935 | | 1 | GERİ VİTES YILDIZ DİŞLİ | SYNCHRONIZER HUB | |
| 18 | K21.03061 | 389 262 1823 | (389 262 0923) | 1 | GERİ VİTES HALKASI | ENGAGING SLEEVE | |
| 19 | K21.03065 | 389 262 0150 | | 1 | GERİ VİTES MASURA BİLYA ÇANAĞI | BEARING RACE | |
| 20 | K21.03813 | 013 981 1810 | (013 981 2610) | 1 | GERİ VİTES MASURA BİLYA | NEEDLE CAGE | 78X86X33mm |
| 21 | K21.06044 | 960 262 0033 | | 1 | GERİ VİTES DİŞLİSİ 40 DİŞ | REVERSE GEAR 40 T. | |
| 22 | K21.03661 | 002 981 8181 | | 1 | KAMALI MİL ARKA BİLYA | ROLLER BEARING | 60X130X35,2mm |
| 23 | K21.04331 | 007 994 1841 | (006 994 9941) | 1 | KAMALI MİL ARKA BİLYA SEKMANI | RETAINING RING | 2,50mm |



**Original parts names, oem numbers, symbols and descriptions used in this catalogue are for reference purposes only.**

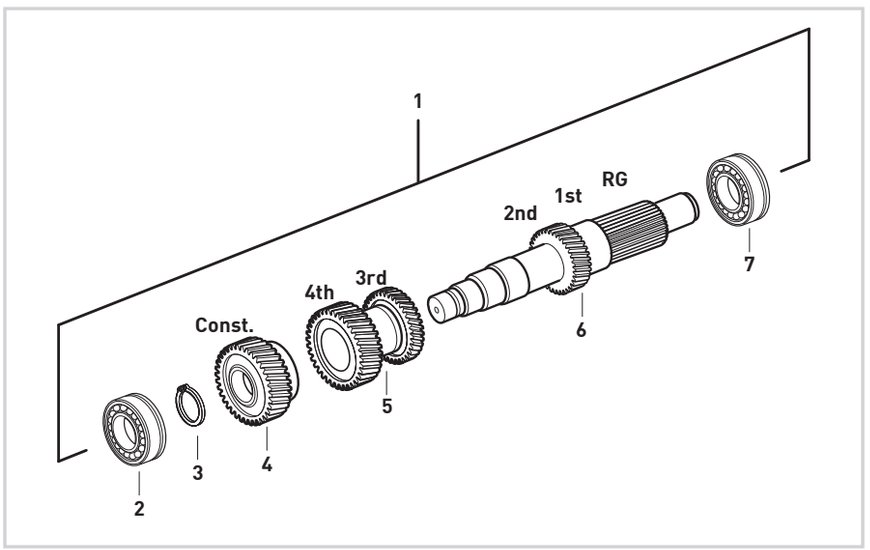


| Fig. | Kacmaz No. | Oem No | Oem Old No | Pcs. | Ürün Tanımı | Description | Sizes |
|---|---|---|---|---|---|---|---|
| 1 | K21.06328 | 930 260 2124 | | Kit | GRUP MİLİ KOMPLE | COUNTER SHAFT COMPLETE | |
| 2 | K21.03606 | 015 981 9005 | (014 981 1405) | 1 | GRUP MİLİ ÖN BİLYA | ROLLER BEARING | 50,8X100X35mm |
| 3 | K21.06425 | 389 994 0041 | | 1 | GRUP MİLİ ÖN BİLYA SEKMANI | RETAINING RING | 2,50mm |
| 4 | K21.06318 | 930 263 2610 | (930 263 0510) | 1 | TAKVİYE DİŞLİ KARŞILIĞI 31 DİŞ | CONSTANT GEAR 31 T | |
| 5 | K21.06320 | 945 263 7313 | (945 263 5713) | 1 | TAK.VE 4.VİT.KARŞILIĞI 29/34 DİŞ | DOUBLE GEAR 29/34 T | |
| | | | (945 263 5813) | | | | |
| 6 | K21.06322 | 930 263 0602 | | 1 | GRUP MİLİ 16/21 DİŞ | COUNTER SHAFT 16T/21T | |
| 7 | K21.03624 | 016 981 1205 | (012 981 9405) | 1 | GRUP MİLİ ARKA BİLYA | ROLLER BEARING | 60X130X33,8mm |





Original parts names, oem numbers, symbols and descriptions used in this catalogue are for reference purposes only.

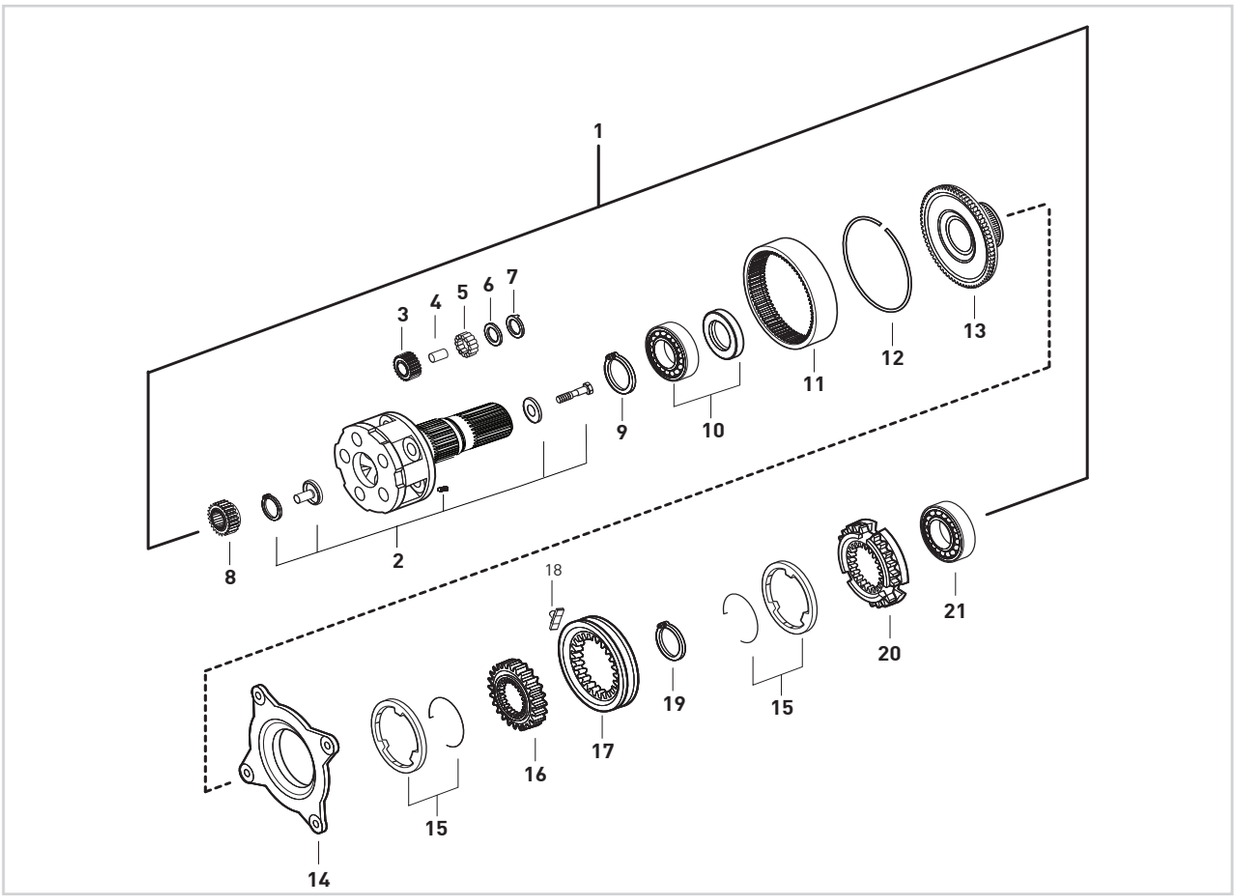


| Fig. | Kacmaz No. | Oem No | Oem Old No | Pcs. | Ürün Tanımı | Description | Sizes |
|---|---|---|---|---|---|---|---|
| 1 | K21.03554 | | | Kit | AĞIR SERİ ARKA AKTARMA KOMPLE | PLANETARY CARRIER COMPLETE | |
| 2 | K21.03180 | 946 260 3561 | (946 260 3661) | 1 | ŞANZIMAN HEYKELİ (BOŞ) | PLANETARY CARRIER (EMPTY) | |
| | | | (945 260 4561) | | | | |
| | | | (945 260 4461) | | | | |
| 3 | K21.03436 | 945 262 0006 | | 5 | HEYKEL KOZA DİŞLİSİ 28 DİŞ | PLANETARY GEAR 28 T. | |
| 4 | K21.03437 | 389 262 0407 | | 5 | HEYKEL KOZA DİŞLİ PİMİ | PLANETARY GEAR PIN | |
| 5 | K21.03816 | 000 981 4186 | (000 981 4386) | 125 | HEYKEL KOZA DİŞLİ TANE BİLYA | NEEDLE ROLLER | D5X39,6 |
| 6 | K21.04074 | 389 262 0162 | (389 262 6462) | 10 | HEYKEL KOZA DİŞLİ PULU | THRUST WASHER | |
| 7 | K21.04075 | 945 262 1162 | (945 262 0162) | 10 | HEYKEL KOZA DİŞLİ PULU | THRUST WASHER | |
| 8 | K21.03169 | 945 262 0909 | (389 262 0809) | 1 | GÜNEŞ DİŞLİ 25 DİŞ | SUN GEAR 25 T. | |
| | | | (389 262 0909) | | | | |
| 9 | K21.06864 | 000472 130000 | | 1 | ÇEMBER DİŞLİ BİLYA SEKMANI | RETAINING RING | 130X4mm |
| 10 | K21.03614 | 008 981 1325 | (004 981 8725) | 1 | ÇEMBER DİŞLİ BİLYASI | ROLLER BEARING | 90X130X14mm |
| 11 | K21.03449 | 945 262 1208 | (945 262 0808) | 1 | ÇEMBER DİŞLİ 85 DİŞ | RING WHEEL 85 T. | |
| 12 | K21.04253 | 389 262 0773 | | 1 | ÇEMBER DİŞLİ SEKMANI | LOCK RING | |
| 13 | K21.03442 | 930 262 0125 | (389 262 1425) | 1 | PLANET ÇAN DİŞLİ 85 DİŞ | CARRIER HUB 85 T. | |
| 14 | K21.03037 | 947 260 3036 | (947 260 0836) | 1 | TABLA SENKROMENÇ | FOLLOWER RING | |
| 15 | K21.03185 | 947 260 0945 | | 2 | AĞIR SERİ FRENLEME (Mo) | SYNCHRONIZING CONE / Mo | |
| 16 | K21.03079 | 389 262 4935 | (389 262 2035) | 1 | AĞIR SERİ YILDIZ DİŞLİ 73 DİŞ | SYNCHRONIZER HUB 73 T. | |
| 17 | K21.03033 | 945 262 6923 | (930 262 0623) | 1 | AĞIR SERİ HALKA | ENGAGING SLEEVE | |
| 18 | K21.03431 | 960 265 0049 | (947 265 0349) | 2 | AĞIR SERİ HİLAL PABUCU | SLIDING PAD | |
| 19 | K21.04356 | 000471 120000 | | 1 | AĞIR SERİ YILDIZ DİŞLİ SEKMANI | RETAINING RING | |
| 20 | K21.03186 | 945 262 3834 | | 1 | SERİ SENKROMENÇ | ENGAGING RING | |
| 21 | K21.03625 | 008 981 3025 | (008 981 5225) | 1 | ŞANZIMAN ARKA BİLYA | ROLLER BEARING | 80X150X28mm |



**Original parts names, oem numbers, symbols and descriptions used in this catalogue are for reference purposes only.**

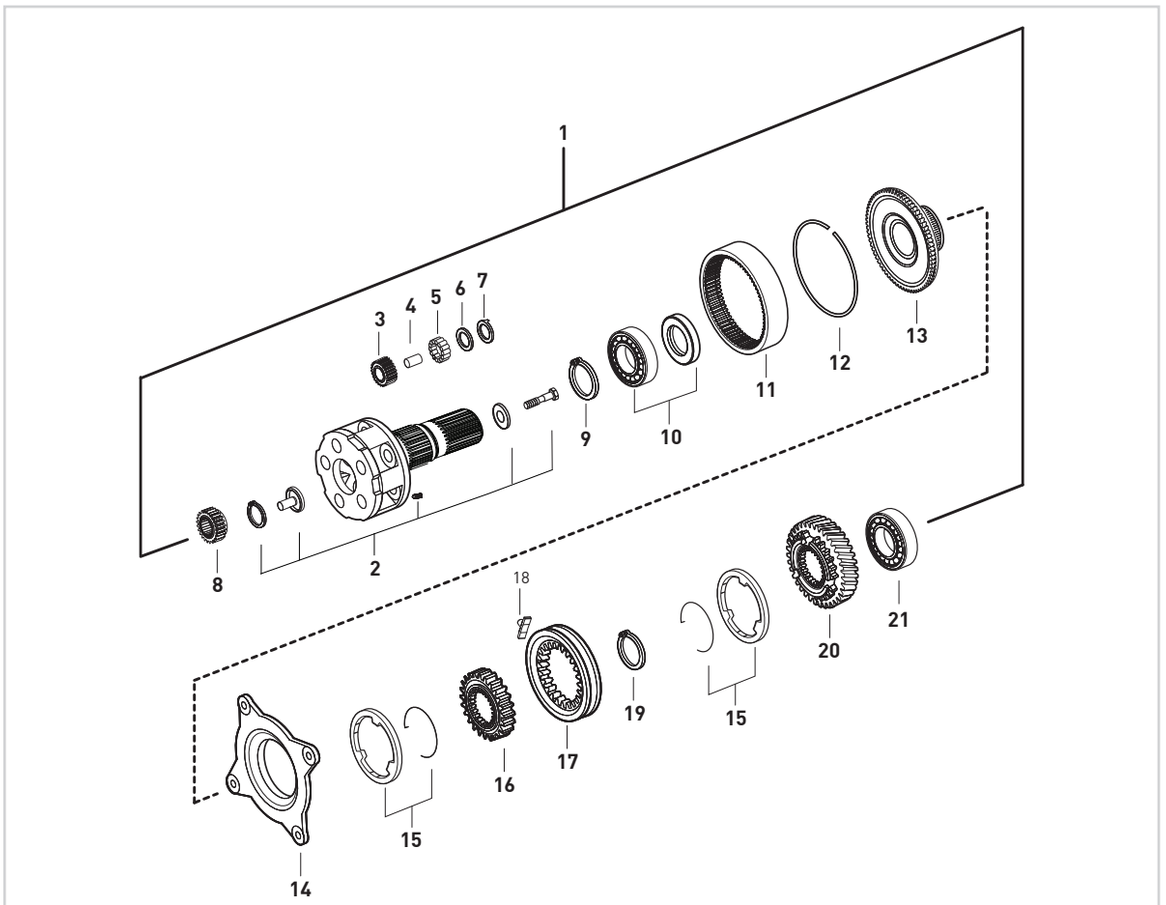


| Fig. | Kacmaz No. | Oem No | Oem Old No | Pcs. | Ürün Tanımı | Description | Sizes |
|---|---|---|---|---|---|---|---|
| 1 | K21.06384 | | | kit | AĞIR SERİ ARKA AKTARMA KOMPLE | PLANETARY CARRIER COMPLETE | |
| 2 | K21.03180 | 946 260 3561 | (946 260 3661) | 1 | ŞANZIMAN HEYKELİ (BOŞ) | PLANETARY CARRIER (EMPTY) | |
| | | | (945 260 4561) | | | | |
| | | | (945 260 4461) | | | | |
| 3 | K21.03436 | 945 262 0006 | | 5 | HEYKEL KOZA DİŞLİSİ 28 DİŞ | PLANETARY GEAR 28 T. | |
| 4 | K21.03437 | 389 262 0407 | | 5 | HEYKEL KOZA DİŞLİ PİMİ | PLANETARY GEAR PIN | |
| 5 | K21.03816 | 000 981 4186 | (000 981 4386) | 125 | HEYKEL KOZA DİŞLİ TANE BİLYA | NEEDLE ROLLER | D5X39,6 |
| 6 | K21.04074 | 389 262 0162 | (389 262 6462) | 10 | HEYKEL KOZA DİŞLİ PULU | THRUST WASHER | |
| 7 | K21.04075 | 945 262 1162 | (945 262 0162) | 10 | HEYKEL KOZA DİŞLİ PULU | THRUST WASHER | |
| 8 | K21.03169 | 945 262 0909 | (389 262 0809) | 1 | GÜNEŞ DİŞLİ 25 DİŞ | SUN GEAR 25 T. | |
| | | | (389 262 0909) | | | | |
| 9 | K21.06864 | 000472 130000 | | 1 | ÇEMBER DİŞLİ BİLYA SEKMANI | RETAINING RING | 130X4mm |
| 10 | K21.03614 | 008 981 1325 | (004 981 8725) | 1 | ÇEMBER DİŞLİ BİLYASI | ROLLER BEARING | 90X130X14mm |
| 11 | K21.03449 | 945 262 1208 | (945 262 0808) | 1 | ÇEMBER DİŞLİ 85 DİŞ | RING WHEEL 85 T. | |
| 12 | K21.04253 | 389 262 0773 | | 1 | ÇEMBER DİŞLİ SEKMANI | LOCK RING | |
| 13 | K21.03442 | 930 262 0125 | (389 262 1425) | 1 | PLANET ÇAN DİŞLİ 85 DİŞ | CARRIER HUB 85 T. | |
| 14 | K21.03037 | 947 260 3036 | (947 260 0836) | 1 | TABLA SENKROMENÇ | FOLLOWER RING | |
| 15 | K21.03185 | 947 260 0945 | | 2 | AĞIR SERİ FRENLEME (Mo) | SYNCHRONIZING CONE / Mo | |
| 16 | K21.03079 | 389 262 4935 | (389 262 2035) | 1 | AĞIR SERİ YILDIZ DİŞLİ 73 DİŞ | SYNCHRONIZER HUB 73 T. | |
| 17 | K21.03033 | 945 262 6923 | (930 262 0623) | 1 | AĞIR SERİ HALKA | ENGAGING SLEEVE | |
| 18 | K21.03431 | 960 265 0049 | (947 265 0349) | 2 | AĞIR SERİ HİLAL PABUCU | SLIDING PAD | |
| 19 | K21.04356 | 000471 120000 | | 1 | AĞIR SERİ YILDIZ DİŞLİ SEKMANI | RETAINING RING | |
| 20 | K21.03188 | 930 264 0320 | | 1 | RETARDER DİŞLİSİ 64 DİŞ | RETARDER GEAR 64 T. | |
| 21 | K21.03625 | 008 981 3025 | (008 981 5225) | 1 | ŞANZIMAN ARKA BİLYA | ROLLER BEARING | 80X150X28mm |



Original parts names, oem numbers, symbols and descriptions used in this catalogue are for reference purposes only.

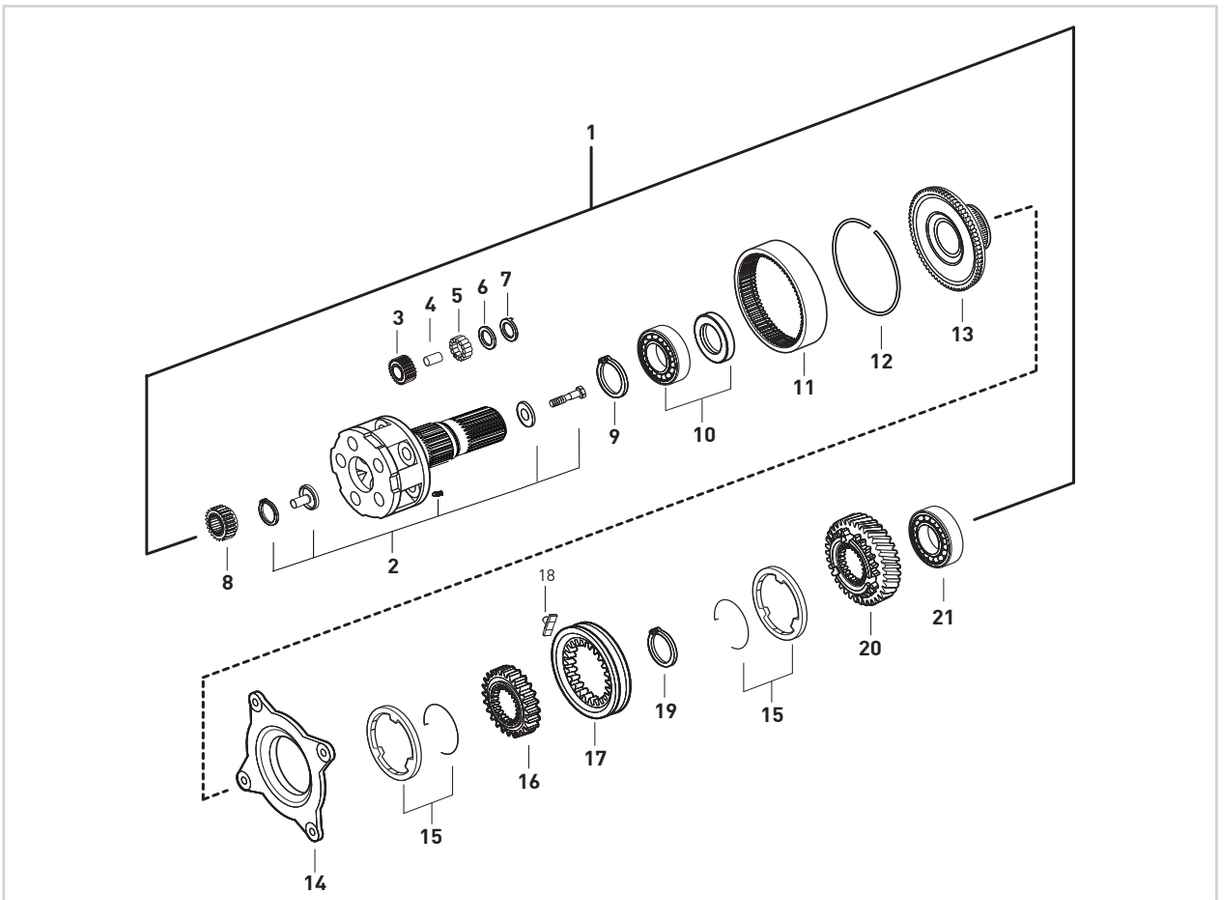


| Fig. | Kacmaz No. | Oem No | Oem Old No | Pcs. | Ürün Tanımı | Description | Sizes |
|---|---|---|---|---|---|---|---|
| 1 | K21.03678 | | | Kit | AĞIR SERİ ARKA AKTARMA KOMPLE | PLANETARY CARRIER COMPLETE | |
| 2 | K21.03180 | 946 260 3561 | (946 260 3661) | 1 | ŞANZIMAN HEYKELİ (BOŞ) | PLANETARY CARRIER (EMPTY) | |
| | | | (945 260 4561) | | | | |
| | | | (945 260 4461) | | | | |
| 3 | K21.03436 | 945 262 0006 | | 5 | HEYKEL KOZA DİŞLİSİ 28 DİŞ | PLANETARY GEAR 28 T. | |
| 4 | K21.03437 | 389 262 0407 | | 5 | HEYKEL KOZA DİŞLİ PİMİ | PLANETARY GEAR PIN | |
| 5 | K21.03816 | 000 981 4186 | (000 981 4386) | 125 | HEYKEL KOZA DİŞLİ TANE BİLYA | NEEDLE ROLLER | D5X39,6 |
| 6 | K21.04074 | 389 262 0162 | (389 262 6462) | 10 | HEYKEL KOZA DİŞLİ PULU | THRUST WASHER | |
| 7 | K21.04075 | 945 262 1162 | (945 262 0162) | 10 | HEYKEL KOZA DİŞLİ PULU | THRUST WASHER | |
| 8 | K21.03169 | 945 262 0909 | (389 262 0809) | 1 | GÜNEŞ DİŞLİ 25 DİŞ | SUN GEAR 25 T. | |
| | | | (389 262 0909) | | | | |
| 9 | K21.06864 | 000472 130000 | | 1 | ÇEMBER DİŞLİ BİLYA SEKMANI | RETAINING RING | 130x4mm |
| 10 | K21.03614 | 008 981 1325 | (004 981 8725) | 1 | ÇEMBER DİŞLİ BİLYASI | ROLLER BEARING | 90X130X14mm |
| 11 | K21.03449 | 945 262 1208 | (945 262 0808) | 1 | ÇEMBER DİŞLİ 85 DİŞ | RING WHEEL 85 T. | |
| 12 | K21.04253 | 389 262 0773 | | 1 | ÇEMBER DİŞLİ SEKMANI | LOCK RING | |
| 13 | K21.03442 | 930 262 0125 | (389 262 1425) | 1 | PLANET ÇAN DİŞLİ 85 DİŞ | CARRIER HUB 85 T. | |
| 14 | K21.03037 | 947 260 3036 | (947 260 0836) | 1 | TABLA SENKROMENÇ | FOLLOWER RING | |
| 15 | K21.03185 | 947 260 0945 | | 2 | AĞIR SERİ FRENLEME (Mo) | SYNCHRONIZING CONE / Mo | |
| 16 | K21.03079 | 389 262 4935 | (389 262 2035) | 1 | AĞIR SERİ YILDIZ DİŞLİ 73 DİŞ | SYNCHRONIZER HUB 73 T. | |
| 17 | K21.03033 | 945 262 6923 | (930 262 0623) | 1 | AĞIR SERİ SENK.HALKA | ENGAGING SLEEVE | |
| 18 | K21.03431 | 960 265 0049 | (947 265 0349) | 2 | AĞIR SERİ HİLAL PABUCU | SLIDING PAD | |
| 19 | K21.04356 | 000471 120000 | | 1 | AĞIR SERİ YILDIZ DİŞLİ SEKMANI | RETAINING RING | |
| 20 | K21.06058 | 930 264 0420 | | 1 | RETARDER DİŞLİSİ 59 DİŞ | RETARDER GEAR 59 T. | |
| 21 | K21.03625 | 008 981 3025 | (008 981 5225) | 1 | ŞANZIMAN ARKA BİLYA | ROLLER BEARING | 80X150X28mm |



**Original parts names, oem numbers, symbols and descriptions used in this catalogue are for reference purposes only.**

| Fig. | Kacmaz No. | Oem No | Oem Old No | Pcs. | Ürün Tanımı | Description |
|---|---|---|---|---|---|---|
| 1 | K21.03085 | 947 264 0005 | (389 269 0310) | 1 | YAĞ POMPA MİLİ | OIL PUMP SHAFT |
| 1 | K21.03670 | 947 264 0105 | | 1 | YAĞ POMPA MİLİ (RETARDER) | OIL PUMP SHAFT |
| 2 | K21.03511 | 029 997 5748 | | 1 | YAĞ POMPA KAPAK ORİNGİ | O-RING |
| 3 | K21.03558 | 947 264 0287 | | 1 | YAĞ POMPA KAPAĞI | OIL PUMP COVER |
| 4 | K21.03613 | 004 981 9225 | (004 981 8625) | 1 | PTO MİL BİLYASI | ROLLER BEARING |
| 5 | K21.06964 | 000471 045000 | (003 994 3741) | 1 | PTO MİL BİLYA SEKMANI | RETAINING RING |
| 6 | K21.06998 | 017 981 1705 | | 1 | PTO BORU DİŞLİ BİLYASI | ROLLER BEARING |
| 7 | | 947 260 4708 | | 1 | PTO BORU DİŞLİ | GEAR |
| 8 | | 017 981 1805 | | 2 | PTO BORU DİŞLİ BİLYASI | ROLLER BEARING |
| 9 | K21.04334 | 945 264 0006 | | 1 | PTO ARA ADAPTÖR MİLİ | INTERM.SHAFT |
| 10 | | 387 264 3652 | | 2 | BİLYA AYAR RAYNELİ | THRUST WASHER |
| 10 | | 387 264 3752 | | 2 | BİLYA AYAR RAYNELİ | THRUST WASHER |
| 10 | | 387 264 3852 | | 2 | BİLYA AYAR RAYNELİ | THRUST WASHER |
| 11 | | 000988 022010 | | 2 | BİLYA AYAR PULU | THRUST WASHER |
| 12 | K21.04333 | 385 993 5201 | | 1 | YAY | SPRING |
| 13 | | 912009 022100 | | 1 | BİLYA AYAR PUL SEKMANI | RETAINING RING |
| 14 | K21.04332 | 000625 000629 | | 1 | PTO MIL ŞAPKASI | PTO SHAFT CAP |
| 15 | | 016 981 6705 | | 1 | PTO BORU DİŞLİ BİLYASI | ROLLER BEARING |
| 16 | | 947 264 0621 | (947 264 0521) | 1 | PTO BORU DİŞLİ | GEAR |
| 17 | K21.04362 | | | kit | ARA ADAPTÖR MİLİ KOMPLE | INTERM.SHAFT COMP. |
| 18 | K21.06346 | 970 260 0457 | | kit | P.T.O VENTİLİ | VALVE |

P.T.O. (POWER TAKE OFF)

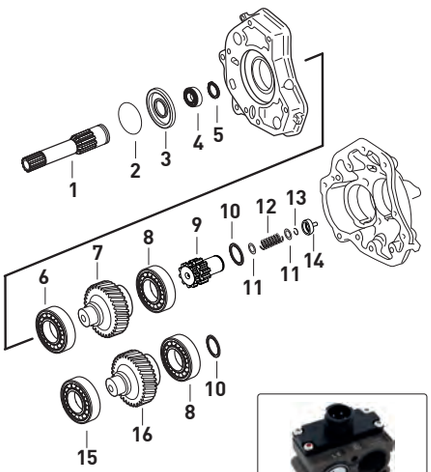





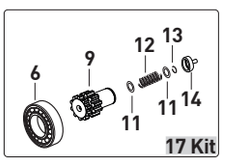






Original parts names, oem numbers, symbols and descriptions used in this catalogue are for reference purposes only.

# GEARBOX G 280-16 KL / 11,07 - 0,69 NEW

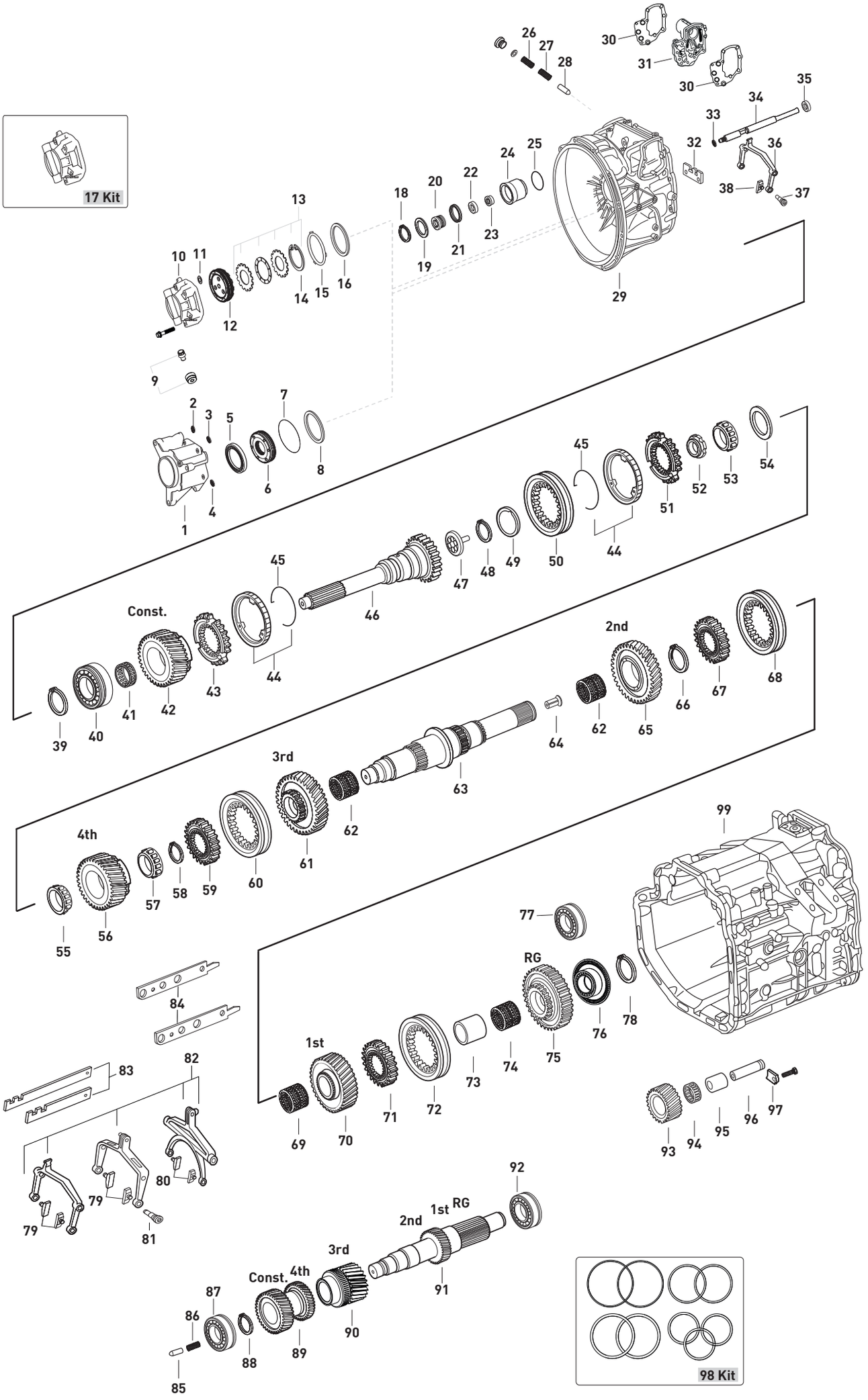




Original parts names, oem numbers, symbols and descriptions used in this catalogue are for reference purposes only.

| Fig. | Kacmaz No | Oem No | Oem Old No | Pcs. | Ürün Tanımı | Description | Sizes | Not | 715523 |
|---|---|---|---|---|---|---|---|---|---|
| 1 | | 960 261 0518 | | 1 | PRİZDİREK KEÇE KAPAĞI | COVER | | | ♦ |
| 1 | | 960 261 0218 | | 1 | PRİZDİREK KEÇE KAPAĞI | COVER | | | ♦ |
| 2 | K21.06637 | 019 997 8348 | (020 997 7948) | 1 | PRİZDİREK KEÇE KAPAK ORİNGİ | O-RING | 14X4mm | | ♦ |
| 3 | K21.06636 | 015 997 4048 | (020 997 8748) | 1 | PRİZDİREK KEÇE KAPAK ORİNGİ | O-RING | 5X3mm | | ♦ |
| 4 | | 023 997 7748 | | 1 | PRİZDİREK KEÇE KAPAK ORİNGİ | O-RING | 13,1X2mm | | ♦ |
| 5 | K21.03509 | 019 997 0547 | (023 997 7847) | 1 | PRİZDİREK KEÇESİ | OIL SEAL | 56X72X8mm | | ♦ |
| | | | (019 997 0647) | | | | | | |
| | | | (022 997 8547) | | | | | | |
| 6 | K21.06038 | 389 261 0665 | (389 261 0765) | 1 | YAĞ TUTUCU DİSK | OIL BAFFLE | 75X16mm | | ♦ |
| | | | (389 261 0865) | | | | | | |
| 7 | K21.06635 | 020 997 7848 | | 1 | PRİZDİREK KEÇE KAPAK ORİNGİ | O-RING | 138X3mm | | ♦ |
| 8 | K21.04162 | 389 262 4152 | (389 262 0955) | 1 | PRİZDİREK AYAR RAYNELİ | THRUST WASHER | 0,10mm | | ♦ |
| 8 | K21.04243 | 389 262 0855 | | 1 | PRİZDİREK AYAR RAYNELİ | THRUST WASHER | 0,15mm | | ♦ |
| 8 | K21.04151 | 389 262 0755 | | 1 | PRİZDİREK AYAR RAYNELİ | THRUST WASHER | 0,20mm | | ♦ |
| 8 | K21.06715 | 389 262 3055 | | 1 | PRİZDİREK AYAR RAYNELİ | THRUST WASHER | 0,25mm | | ♦ |
| 8 | K21.04221 | 389 262 3255 | | 1 | PRİZDİREK AYAR RAYNELİ | THRUST WASHER | 0,31mm | | ♦ |
| 8 | K21.04163 | 389 262 3555 | (389 262 0655) | 1 | PRİZDİREK AYAR RAYNELİ | THRUST WASHER | 0,40mm | | ♦ |
| | | | (389 262 4452) | | | | | | |
| 8 | K21.04164 | 389 262 3755 | (389 262 1954) | 1 | PRİZDİREK AYAR RAYNELİ | THRUST WASHER | 0,46mm | | ♦ |
| 8 | K21.04246 | 389 262 3855 | | 1 | PRİZDİREK AYAR RAYNELİ | THRUST WASHER | 0,49mm | | ♦ |
| 8 | K21.04250 | 389 262 4055 | (389 262 0155) | 1 | PRİZDİREK AYAR RAYNELİ | THRUST WASHER | 0,55mm | | ♦ |
| | | | (389 262 2154) | | | | | | |
| 8 | K21.04167 | 389 262 4255 | (389 262 2254) | 1 | PRİZDİREK AYAR RAYNELİ | THRUST WASHER | 0,61mm | | ♦ |
| 8 | K21.04168 | 389 262 4355 | (389 262 2354) | 1 | PRİZDİREK AYAR RAYNELİ | THRUST WASHER | 0,64mm | | ♦ |
| 8 | K21.04169 | 389 262 4555 | (389 262 2454) | 1 | PRİZDİREK AYAR RAYNELİ | THRUST WASHER | 0,70mm | | ♦ |
| 8 | K21.04170 | 389 262 4755 | (389 262 2554) | 1 | PRİZDİREK AYAR RAYNELİ | THRUST WASHER | 0,76mm | | ♦ |
| 8 | K21.04281 | 389 262 4855 | (389 262 0555) | 1 | PRİZDİREK AYAR RAYNELİ | THRUST WASHER | 0,79mm | | ♦ |
| 8 | K21.04282 | 389 262 5555 | | 1 | PRİZDİREK AYAR RAYNELİ | THRUST WASHER | 1,00mm | | ♦ |
| 8 | K21.04171 | 389 262 9654 | (389 262 2654) | 1 | PRİZDİREK AYAR RAYNELİ | THRUST WASHER | 2,00mm | | ♦ |
| 9 | K21.07027 | 960 260 0058 | | 1 | HAVALANDIRMA TAMİR TAKIMI | REPAIR KIT | | | ♦ |
| 10 | K21.06949 | 960 261 4133 | | 1 | GRUP DURDURUCU KAPAĞI | COVER | | | ♦ |
| 11 | K21.06636 | 015 997 4048 | (020 997 8748) | 1 | GRUP DURDURUCU PİSTON ORİNGİ | O-RING | 5X3mm | | ♦ |
| 12 | K21.06967 | 960 260 3418 | | 1 | GRUP DURDURUCU KAPAK PİSTONU | PISTON | | | ♦ |
| 13 | K21.06431 | 960 262 0291 | (960 262 0191) | 1 | KAVRAMA HALKA SETİ | PARTS KIT | | | ♦ |
| | | | (960 262 0091) | | | | | | |
| | | | (947 260 4036) | | | | | | |
| 14 | K21.06730 | 970 994 3541 | (000472 100000) | 1 | GRUP DURDURUCU KİLİT SEKMANI | RETAINING RING | 3,00mm | | ♦ |
| 15 | K21.06533 | 028 997 2348 | (004 997 2248) | 1 | GRUP DURDURUCU KAPAK ORİNGİ | O-RING | 100X3mm | | ♦ |
| 16 | K21.04192 | 406 337 0252 | | 1 | GRUP MİLİ ÖN BİLYA RAYNELİ | THRUST WASHER | 0,10mm | | ♦ |
| 16 | K21.04150 | 406 337 0352 | | 1 | GRUP MİLİ ÖN BİLYA RAYNELİ | THRUST WASHER | 0,20mm | | ♦ |
| 16 | K21.94150 | | | 1 | GRUP MİLİ ÖN BİLYA RAYNELİ | THRUST WASHER | 0,25mm | | ♦ |
| 16 | K21.04338 | 406 337 0452 | | 1 | GRUP MİLİ ÖN BİLYA RAYNELİ | THRUST WASHER | 0,30mm | | ♦ |
| 16 | K21.04196 | 389 263 5352 | (389 263 3252) | 1 | GRUP MİLİ ÖN BİLYA RAYNELİ | THRUST WASHER | 0,40mm | | ♦ |
| 16 | K21.04194 | 389 263 3352 | | 1 | GRUP MİLİ ÖN BİLYA RAYNELİ | THRUST WASHER | 0,45mm | | ♦ |
| 16 | K21.06719 | 389 263 5652 | | 1 | GRUP MİLİ ÖN BİLYA RAYNELİ | THRUST WASHER | 0,49mm | | ♦ |
| 16 | K21.04197 | 389 263 5852 | (389 263 3552) | 1 | GRUP MİLİ ÖN BİLYA RAYNELİ | THRUST WASHER | 0,55mm | | ♦ |
| 16 | K21.04340 | 389 263 6052 | | 1 | GRUP MİLİ ÖN BİLYA RAYNELİ | THRUST WASHER | 0,61mm | | ♦ |
| 16 | K21.04198 | 389 263 6352 | (389 263 3852) | 1 | GRUP MİLİ ÖN BİLYA RAYNELİ | THRUST WASHER | 0,70mm | | ♦ |
| 16 | K21.04154 | 389 263 3952 | | 1 | GRUP MİLİ ÖN BİLYA RAYNELİ | THRUST WASHER | 0,75mm | | ♦ |
| 16 | K21.04199 | 389 263 6852 | | 1 | GRUP MİLİ ÖN BİLYA RAYNELİ | THRUST WASHER | 0,85mm | | ♦ |
| 16 | K21.04200 | 389 263 7352 | | 1 | GRUP MİLİ ÖN BİLYA RAYNELİ | THRUST WASHER | 1,00mm | | ♦ |
| 16 | K21.04201 | 389 263 7852 | | 1 | GRUP MİLİ ÖN BİLYA RAYNELİ | THRUST WASHER | 1,15mm | | ♦ |
| 16 | K21.04202 | 389 263 8352 | | 1 | GRUP MİLİ ÖN BİLYA RAYNELİ | THRUST WASHER | 1,30mm | | ♦ |

NOTES :

NOTLAR :





Original parts names, oem numbers, symbols and descriptions used in this catalogue are for reference purposes only.

# GEARBOX G 280-16 KL / 11,07 - 0,69 NEW

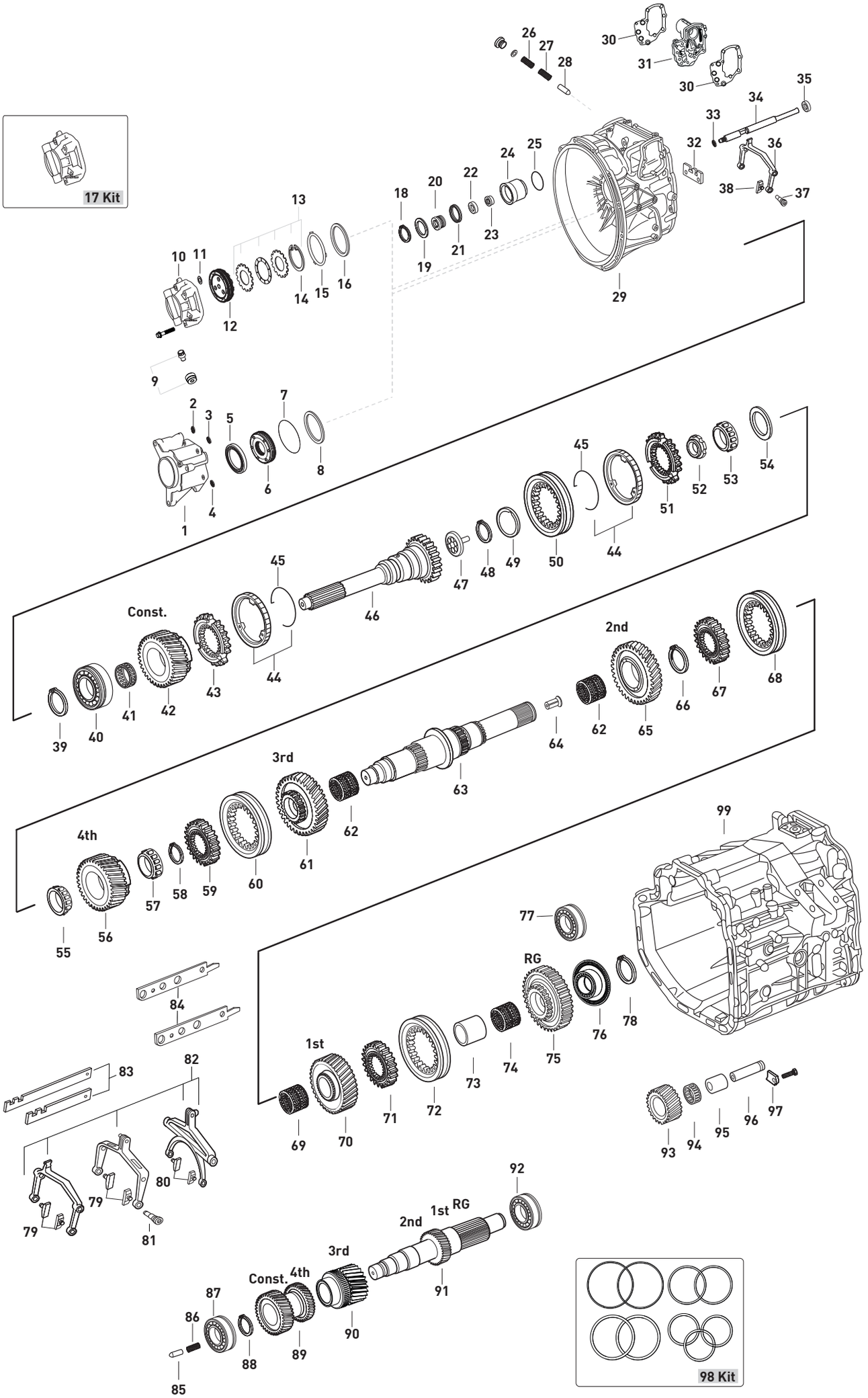




Original parts names, oem numbers, symbols and descriptions used in this catalogue are for reference purposes only.

| Fig. | Kacmaz No | Oem No | Oem Old No | Pcs. | Ürün Tanımı | Description | Sizes | Not | 715523 |
|---|---|---|---|---|---|---|---|---|---|
| 17 | K21.06948 | 960 260 5965 | (960 260 4865) | 1 | GRUP DURDURUCU KAPAĞI KOMPLE | REPAIR KIT | | | ♦ |
| 18 | | 006 994 4241 | (000472 065001) | 1 | TAKVİYE PİSTON SEKMANI | RETAINING RING | 65X2,5mm | | ♦ |
| 19 | K21.04233 | 389 262 2555 | | 1 | TAKVİYE SİLİNDİR PULU | SPACER WASHER | 0,70mm | | ♦ |
| 19 | K21.04234 | 389 262 2655 | | 1 | TAKVİYE SİLİNDİR PULU | SPACER WASHER | 0,90mm | | ♦ |
| 19 | K21.04112 | 389 262 3254 | | 1 | TAKVİYE SİLİNDİR PULU | SPACER WASHER | 1,05mm | | ♦ |
| 19 | K21.04111 | 389 262 3354 | | 1 | TAKVİYE SİLİNDİR PULU | SPACER WASHER | 1,10mm | | ♦ |
| 19 | K21.04109 | 389 262 3554 | | 1 | TAKVİYE SİLİNDİR PULU | SPACER WASHER | 1,20mm | | ♦ |
| 19 | K21.04105 | 389 262 2052 | | 1 | TAKVİYE SİLİNDİR PULU | SPACER WASHER | 1,40mm | | ♦ |
| 19 | K21.04093 | 389 262 2355 | | 1 | TAKVİYE SİLİNDİR PULU | SPACER WASHER | 1,79mm | | ♦ |
| 19 | K21.04025 | 389 262 3252 | | 1 | TAKVİYE SİLİNDİR PULU | SPACER WASHER | 2,00mm | | ♦ |
| 19 | K21.04024 | 389 262 3352 | | 1 | TAKVİYE SİLİNDİR PULU | SPACER WASHER | 2,50mm | | ♦ |
| 20 | K21.06994 | 945 267 0218 | (387 267 0918) | 1 | TAKVİYE MİL PİSTONU | PISTON | | | ♦ |
| | | | (387 267 0618) | | | | | | |
| 21 | K21.03524 | 006 997 6447 | (020 997 6647) | 1 | TAKVİYE HAVA KEÇESİ | OIL SEAL | 41X48X11,5mm | | ♦ |
| | | | (012 997 3347) | | | | | | |
| 22 | K21.04178 | 387 267 0650 | (387 267 0250) | 1 | TAKVİYE SİLİNDİR BURCU | BUSHING | 34X22X8mm | | ♦ |
| 23 | K21.03523 | 000 267 0197 | (000 267 0397) | 1 | TAKVİYE MİL HİLAL KEÇESİ | OIL SEAL | 22X32X8mm | | ♦ |
| 24 | K21.06036 | 945 267 0819 | (945 267 0119) | 1 | TAKVİYE SİLİNDİR GÖVDESİ | CYLINDER | | | ♦ |
| | | | (945 267 0719) | | | | | | |
| | | | (945 267 0019) | | | | | | |
| 25 | K21.06534 | 022 997 4248 | | 1 | TAKVİYE SİLİNDİR ORİNGİ | O-RING | 55,6X3mm | | ♦ |
| 26 | K21.06015 | 387 993 4501 | | 1 | ŞANZ.TAKVİYE KİLİT FİŞEK YAYI | SPRING | 6,2X63mm | | ♦ |
| 27 | K21.03500 | 387 993 4401 | (387 993 2501) | 1 | KİLİT YAYI | SPRING | 9,8X63,3mm | | ♦ |
| 28 | K21.03492 | 389 267 1174 | (387 267 0074) | 1 | KİLİT FİŞEĞİ | PIN | | | ♦ |
| 29 | | 960 260 6623 | (960 260 6212) | 1 | ŞANZIMAN ÖN GÖVDE | HOUSING | | | ♦ |
| 30 | | 960 261 0680 | | 2 | KULE CONTASI | GASKET | | | ♦ |
| 31 | | 960 260 1213 | | 1 | KULE KAPAĞI | COVER | | | ♦ |
| 32 | | 930 265 0345 | | 1 | VİTES HİLAL ÇITA KİLİTLEMESİ | GUIDE | | | ♦ |
| 33 | K21.04160 | 387 263 2652 | | 1 | TAKVİYE HİLAL MİL PULU | SPACER WASHER | 0,20mm | | ♦ |
| 33 | K21.04161 | 387 263 2752 | | 1 | TAKVİYE HİLAL MİL PULU | SPACER WASHER | 0,40mm | | ♦ |
| 33 | | 387 263 2852 | | 1 | TAKVİYE HİLAL MİL PULU | SPACER WASHER | 0,60mm | | ♦ |
| 33 | | 387 263 3052 | | 1 | TAKVİYE HİLAL MİL PULU | SPACER WASHER | 1,00mm | | ♦ |
| 34 | | 960 267 1817 | | 1 | TAKVİYE HİLAL MİLİ | G.SHIFT RAIL | | | ♦ |
| 35 | | 004 992 6601 | | 1 | TAKVİYE HİLAL MİL BURCU | BUSHING | | | ♦ |
| 36 | | 656 265 0801 | | 1 | TAKVİYE HİLALİ | GEAR SHIFT FORK | | | ♦ |
| 37 | K21.04307 | 960 265 0774 | (945 265 1274) | 2 | HİLAL CİVATASI | PIN | | | ♦ |
| | | | (945 265 2974) | | | | | | |
| | | | (945 265 2774) | | | | | | |
| 38 | K21.03431 | 960 265 0049 | (947 265 0349) | 2 | TAKVİYE HİLAL PABUCU | SLIDING PAD | | | ♦ |
| | | | (389 265 2749) | | | | | | |
| 39 | K21.04347 | 387 262 8673 | | 1 | PRİZDİREK ÖN BİLYA SEKMANI | RETAINING RING | 3,15mm | | ♦ |
| 39 | K21.04346 | 387 262 8773 | | 1 | PRİZDİREK ÖN BİLYA SEKMANI | RETAINING RING | 3,20mm | | ♦ |
| 39 | K21.07015 | 387 262 8873 | | 1 | PRİZDİREK ÖN BİLYA SEKMANI | RETAINING RING | 3,25mm | | ♦ |
| 39 | K21.04348 | 387 262 8973 | | 1 | PRİZDİREK ÖN BİLYA SEKMANI | RETAINING RING | 3,30mm | | ♦ |
| 39 | K21.07016 | 387 262 9073 | | 1 | PRİZDİREK ÖN BİLYA SEKMANI | RETAINING RING | 3,35mm | | ♦ |
| 39 | K21.04349 | 387 262 9173 | | 1 | PRİZDİREK ÖN BİLYA SEKMANI | RETAINING RING | 3,40mm | | ♦ |
| 39 | K21.07017 | 387 262 9273 | | 1 | PRİZDİREK ÖN BİLYA SEKMANI | RETAINING RING | 3,45mm | | ♦ |
| 39 | K21.04350 | 387 262 9373 | | 1 | PRİZDİREK ÖN BİLYA SEKMANI | RETAINING RING | 3,50mm | | ♦ |
| 40 | K21.03618 | 011 981 1305 | (014 981 9005) | 1 | PRİZDİREK ÖN BİLYA | ROLLER BEARING | 75X140X34,25mm | | ♦ |
| | | | (008 981 8605) | | | | | | |
| | | | (008 981 2605) | | | | | | |
| 41 | K21.03818 | 018 981 8210 | (018 981 6410) | 1 | TAKVİYE MASURA BİLYA | NEEDLE CAGE | 84X90X39,5mm | | ♦ |
| 42 | K21.06325 | 930 262 3217 | (930 262 0417) | 1 | TAKVİYE DİŞLİSİ 32 DİŞ | CONSTANT GEAR 32 T | | | ♦ |

NOTES :

NOTLAR :





Original parts names, oem numbers, symbols and descriptions used in this catalogue are for reference purposes only.

# GEARBOX G 280-16 KL / 11,07 - 0,69 NEW

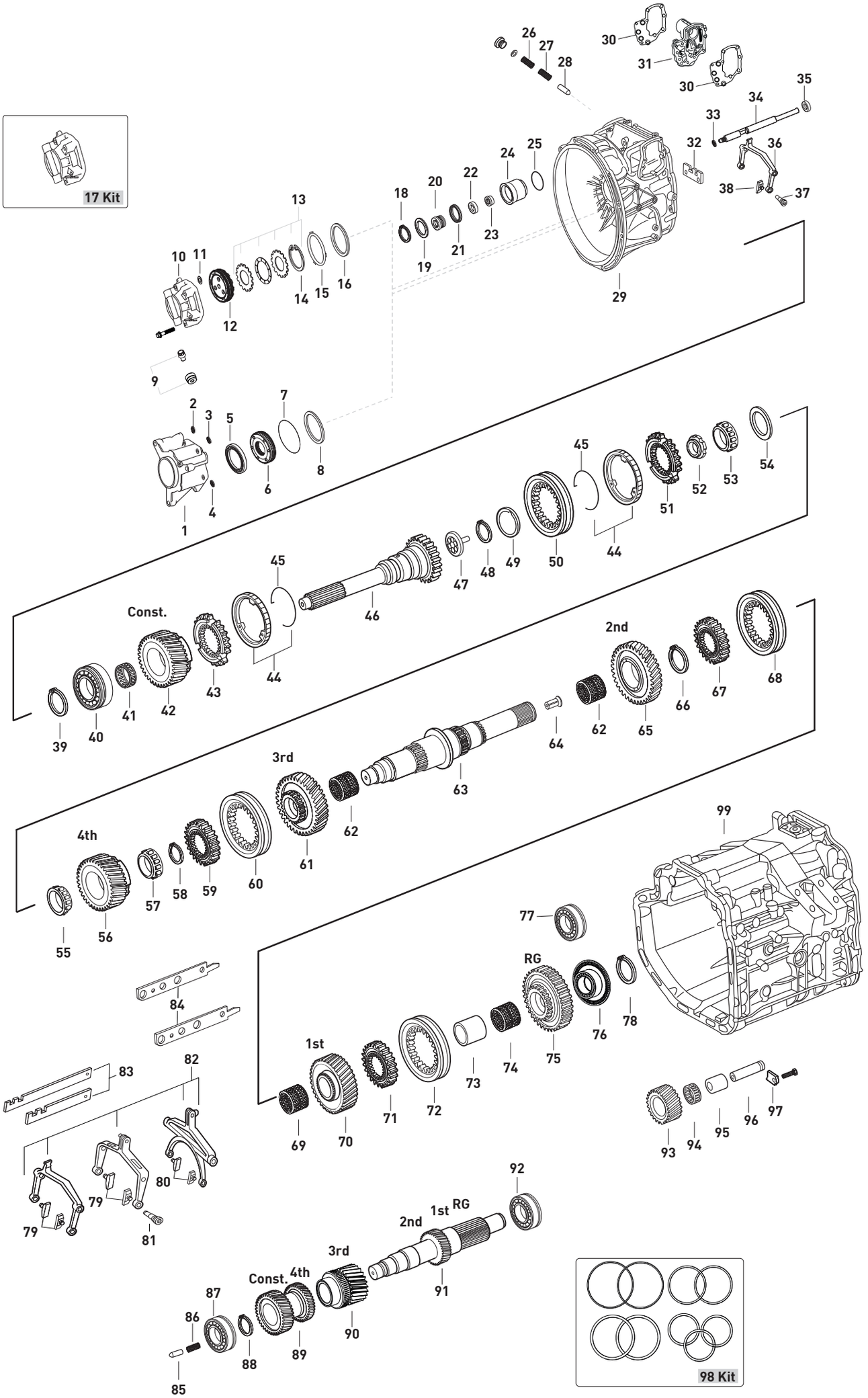




Original parts names, oem numbers, symbols and descriptions used in this catalogue are for reference purposes only.

| Fig. | Kacmaz No | Oem No | Oem Old No | Pcs. | Ürün Tanımı | Description | Sizes | Not | 715523 |
|---|---|---|---|---|---|---|---|---|---|
| 43 | K21.03146 | 945 262 8234 | (945 262 5434) | 1 | TAKVİYE SENKROMENÇ | ENGAGING RING | | | ♦ |
| 44 | K21.03148 | 947 260 1945 | (947 260 4645) | 2 | TAKVİYE FRENLEME (Mo) | SYNCHRONIZING CONE / Mo | | | ♦ |
| | | | (946 262 6137) | | | | | | |
| 44 | K21.06299 | 947 260 3545 | (947 260 5145) | 2 | TAKVİYE FRENLEME (C) | SYNCHRONIZING CONE / C | | | ♦ |
| | | | (947 260 2945) | | | | | | |
| | | | (947 260 0745) | | | | | | |
| 45 | K21.03055 | 387 262 0893 | (387 262 0793) | 2 | FRENLEME TELİ | SPRING | | | ♦ |
| 46 | K21.06284 | 930 262 1003 | (930 262 0003) | 1 | PRİZDİREK 66 DİŞ | INPUT SHAFT 66 T. | | | ♦ |
| 46 | | 930 262 1903 | | 1 | PRİZDİREK | INPUT SHAFT | | | ♦ |
| 46 | | 960 264 0606 | | 1 | PRİZDİREK | INPUT SHAFT | | | ♦ |
| 46 | | 960 264 1006 | | 1 | PRİZDİREK | INPUT SHAFT | | | ♦ |
| 47 | K21.04001 | 976 269 0034 | (960 269 0434) | 1 | PRİZDİREK YAĞ PİPETİ | OIL COLLECTOR | | | ♦ |
| 48 | K21.04002 | 000 994 9841 | | 1 | PRİZDİREK YAĞ PİPET SEKMANI | RETAINING RING | | | ♦ |
| 49 | K21.03513 | 001 262 0262 | (000 262 8662) | 1 | PRİZDİREK ARKA KEÇE | OIL SEAL | 73,5X101X7mm | | ♦ |
| | | | (000 262 9062) | | | | | | |
| 50 | K21.03151 | 945 262 6523 | (930 262 0523) | 1 | TAKVİYE HALKA | ENGAGING SLEEVE | | | ♦ |
| 51 | K21.03576 | 930 262 0234 | (930 262 0034) | 1 | TAKVİYE SENKROMENÇ | ENGAGING RING | | | ♦ |
| 52 | K21.03432 | 945 990 0250 | (945 990 0150) | 1 | KAMALI MİL SOMUNU | NUT | M30X1,5 | | ♦ |
| 53 | K21.03632 | 020 981 5205 | (017 981 1305) | 1 | KAMALI MİL UÇ BİLYA | ROLLER BEARING | 39,69X40,39mm | | ♦ |
| 54 | K21.04024 | 389 262 3352 | | 1 | KAMALI MİL AYAR PULU | THRUST WASHER | 2,50mm | | ♦ |
| 54 | K21.04025 | 389 262 3252 | | 1 | KAMALI MİL AYAR PULU | THRUST WASHER | 2,00mm | | ♦ |
| 54 | K21.04026 | 389 262 3152 | | 1 | KAMALI MİL AYAR PULU | THRUST WASHER | 1,95mm | | ♦ |
| 54 | K21.04027 | 389 262 3052 | | 1 | KAMALI MİL AYAR PULU | THRUST WASHER | 1,90mm | | ♦ |
| 54 | K21.04028 | 389 262 2952 | | 1 | KAMALI MİL AYAR PULU | THRUST WASHER | 1,85mm | | ♦ |
| 54 | K21.04092 | 389 262 2455 | | 1 | KAMALI MİL AYAR PULU | THRUST WASHER | 1,82mm | | ♦ |
| 54 | K21.04093 | 389 262 2355 | | 1 | KAMALI MİL AYAR PULU | THRUST WASHER | 1,79mm | | ♦ |
| 54 | K21.04094 | 389 262 2255 | | 1 | KAMALI MİL AYAR PULU | THRUST WASHER | 1,76mm | | ♦ |
| 54 | K21.04095 | 389 262 2155 | | 1 | KAMALI MİL AYAR PULU | THRUST WASHER | 1,73mm | | ♦ |
| 54 | K21.04096 | 389 262 2055 | | 1 | KAMALI MİL AYAR PULU | THRUST WASHER | 1,67mm | | ♦ |
| 54 | K21.04097 | 389 262 1955 | | 1 | KAMALI MİL AYAR PULU | THRUST WASHER | 1,64mm | | ♦ |
| 54 | K21.04098 | 389 262 1855 | | 1 | KAMALI MİL AYAR PULU | THRUST WASHER | 1,61mm | | ♦ |
| 54 | K21.04099 | 389 262 1755 | | 1 | KAMALI MİL AYAR PULU | THRUST WASHER | 1,58mm | | ♦ |
| 54 | K21.04100 | 389 262 2352 | | 1 | KAMALI MİL AYAR PULU | THRUST WASHER | 1,55mm | | ♦ |
| 54 | K21.04101 | 389 262 1655 | | 1 | KAMALI MİL AYAR PULU | THRUST WASHER | 1,52mm | | ♦ |
| 54 | K21.04102 | 389 262 1555 | | 1 | KAMALI MİL AYAR PULU | THRUST WASHER | 1,49mm | | ♦ |
| 54 | K21.04103 | 389 262 1455 | | 1 | KAMALI MİL AYAR PULU | THRUST WASHER | 1,46mm | | ♦ |
| 54 | K21.04104 | 389 262 1355 | | 1 | KAMALI MİL AYAR PULU | THRUST WASHER | 1,43mm | | ♦ |
| 54 | K21.04105 | 389 262 2052 | | 1 | KAMALI MİL AYAR PULU | THRUST WASHER | 1,40mm | | ♦ |
| 54 | K21.04106 | 389 262 1952 | | 1 | KAMALI MİL AYAR PULU | THRUST WASHER | 1,35mm | | ♦ |
| 54 | K21.04107 | 389 262 2754 | | 1 | KAMALI MİL AYAR PULU | THRUST WASHER | 1,30mm | | ♦ |
| 54 | K21.04108 | 389 262 3654 | | 1 | KAMALI MİL AYAR PULU | THRUST WASHER | 1,25mm | | ♦ |
| 54 | K21.04109 | 389 262 3554 | | 1 | KAMALI MİL AYAR PULU | THRUST WASHER | 1,20mm | | ♦ |
| 54 | K21.04110 | 389 262 3454 | | 1 | KAMALI MİL AYAR PULU | THRUST WASHER | 1,15mm | | ♦ |
| 54 | K21.04111 | 389 262 3354 | | 1 | KAMALI MİL AYAR PULU | THRUST WASHER | 1,10mm | | ♦ |
| 54 | K21.04112 | 389 262 3254 | | 1 | KAMALI MİL AYAR PULU | THRUST WASHER | 1,05mm | | ♦ |
| 54 | K21.04113 | 389 262 2854 | | 1 | KAMALI MİL AYAR PULU | THRUST WASHER | 0,50mm | | ♦ |
| 54 | K21.94113 | | | 1 | KAMALI MİL AYAR PULU | THRUST WASHER | 0,40mm | | ♦ |
| 54 | K21.84113 | | | 1 | KAMALI MİL AYAR PULU | THRUST WASHER | 0,30mm | | ♦ |
| 54 | K21.74113 | | | 1 | KAMALI MİL AYAR PULU | THRUST WASHER | 0,20mm | | ♦ |
| 54 | K21.64113 | | | 1 | KAMALI MİL AYAR PULU | THRUST WASHER | 0,10mm | | ♦ |
| 55 | K21.03620 | 017 981 5105 | (015 981 6105) | 1 | 4.VİTES DİŞLİ ÖN BİLYA | ROLLER BEARING | 50X41,3mm | | ♦ |
| | | | (014 981 2605) | | | | | | |
| 56 | K21.06504 | 930 262 3817 | | 1 | 4.VİTES DİŞLİSİ 36 DİŞ | GEAR 4th 36 T | | | ♦ |

NOTES :

NOTLAR :





Original parts names, oem numbers, symbols and descriptions used in this catalogue are for reference purposes only.

# GEARBOX G 280-16 KL / 11,07 - 0,69 NEW

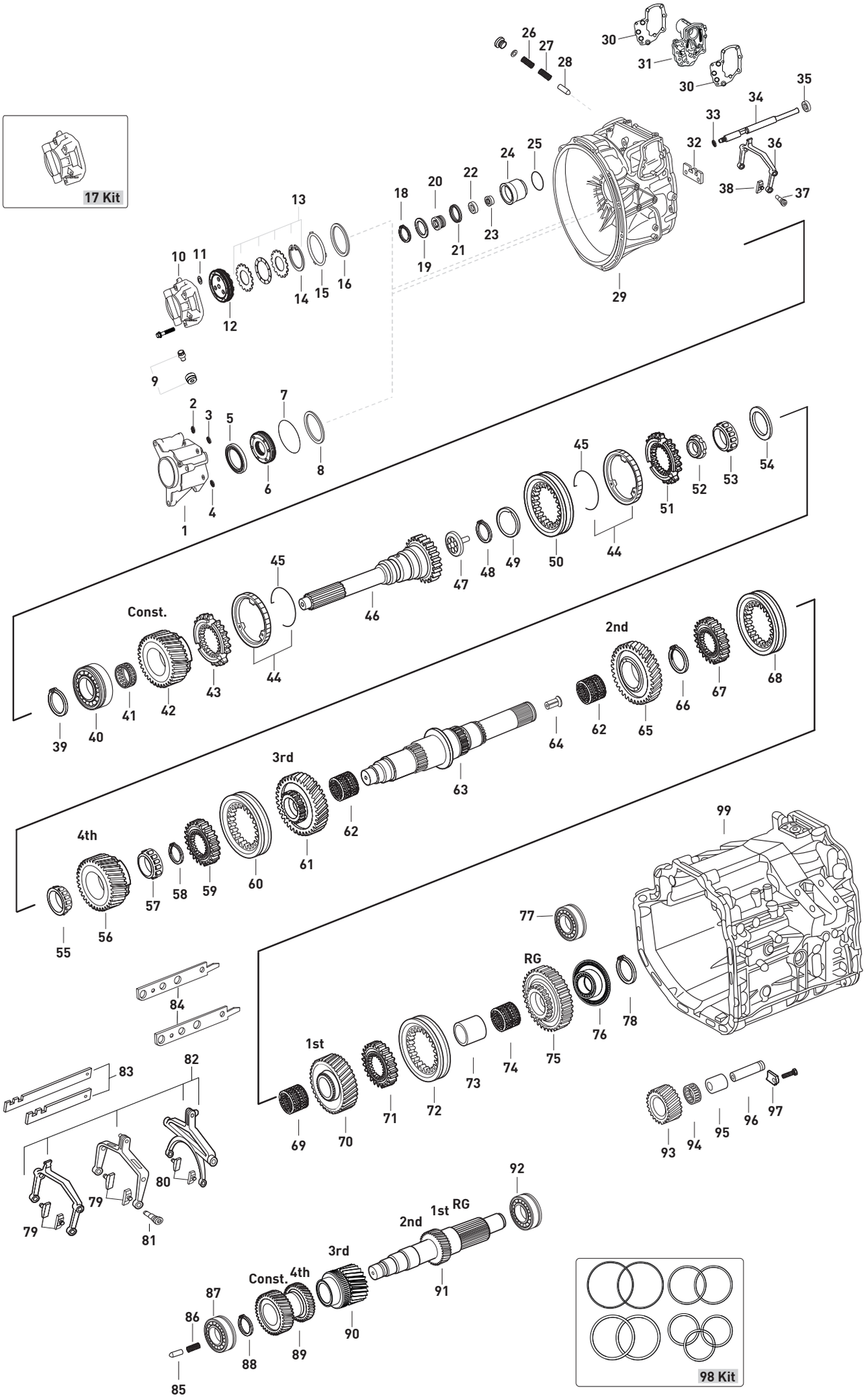




Original parts names, oem numbers, symbols and descriptions used in this catalogue are for reference purposes only.

| Fig. | Kacmaz No | Oem No | Oem Old No | Pcs. | Ürün Tanımı | Description | Sizes | Not | 715523 |
|---|---|---|---|---|---|---|---|---|---|
| 57 | K21.03664 | 017 981 7105 | | 1 | 4.VİTES DİŞLİ ARKA BİLYA | ROLLER BEARING | 55X29,8mm | | ♦ |
| 58 | K21.04343 | 387 262 2073 | | 1 | 3./4.VİTES YILDIZ DİŞLİ SEKMANI | RETAINING RING | 2,40mm | | ♦ |
| 58 | K21.06687 | 387 262 2173 | | 1 | 3./4.VİTES YILDIZ DİŞLİ SEKMANI | RETAINING RING | 2,45mm | | ♦ |
| 58 | K21.04342 | 007 994 0041 | (387 262 2273) | 1 | 3./4.VİTES YILDIZ DİŞLİ SEKMANI | RETAINING RING | 2,50mm | | ♦ |
| 58 | K21.04359 | 387 262 2373 | | 1 | 3./4.VİTES YILDIZ DİŞLİ SEKMANI | RETAINING RING | 2,55mm | | ♦ |
| 58 | K21.04345 | 387 262 2473 | | 1 | 3./4.VİTES YILDIZ DİŞLİ SEKMANI | RETAINING RING | 2,60mm | | ♦ |
| 58 | K21.07021 | 387 262 2573 | | 1 | 3./4.VİTES YILDIZ DİŞLİ SEKMANI | RETAINING RING | 2,65mm | | ♦ |
| 58 | K21.04344 | 387 262 7973 | | 1 | 3./4.VİTES YILDIZ DİŞLİ SEKMANI | RETAINING RING | 2,70mm | | ♦ |
| 58 | K21.07022 | 387 262 8073 | | 1 | 3./4.VİTES YILDIZ DİŞLİ SEKMANI | RETAINING RING | 2,75mm | | ♦ |
| 58 | K21.06588 | 387 262 8173 | | 1 | 3./4.VİTES YILDIZ DİŞLİ SEKMANI | RETAINING RING | 2,80mm | | ♦ |
| 59 | K21.03581 | 960 262 3135 | (945 262 3635) | 1 | 3./4.VİTES YILDIZ DİŞLİ | SYNCHRONIZER HUB | | | ♦ |
| | | | (960 262 2235) | | | | | | |
| | | | (930 262 0835) | | | | | | |
| 60 | K21.03582 | 960 262 1523 | (930 262 0123) | 1 | 3./4.VİTES HALKASI | ENGAGING SLEEVE | | | ♦ |
| | | | (930 262 0723) | | | | | | |
| | | | (945 262 5223) | | | | | | |
| 61 | K21.06327 | 930 262 0513 | (930 262 0013) | 1 | 3.VİTES DİŞLİSİ 29 DİŞ | GEAR 3rd 29 T | | | ♦ |
| | | | (930 262 0113) | | | | | | |
| | | | (930 262 0213) | | | | | | |
| 62 | K21.03810 | 018 981 6610 | (010 981 5310) | 2 | 2./3.VİTES MASURA BİLYA | NEEDLE CAGE | 85X93X53mm | | ♦ |
| 63 | K21.06502 | 960 262 0005 | | 1 | KAMALI MİL | MAIN SHAFT | | | ♦ |
| 64 | K21.04364 | 001 990 2759 | | 1 | KAMALI MİL YAĞ BORUSU | OIL PIPE | | | ♦ |
| 65 | K21.06043 | 945 262 6812 | | 1 | 2.VİTES DİŞLİSİ 39 DİŞ | GEAR 2nd 39 T. | | | ♦ |
| 66 | K21.04343 | 387 262 2073 | | 1 | 1./2.VİTES YILDIZ DİŞLİ SEKMANI | RETAINING RING | 2,40mm | | ♦ |
| 66 | K21.06687 | 387 262 2173 | | 1 | 1./2.VİTES YILDIZ DİŞLİ SEKMANI | RETAINING RING | 2,45mm | | ♦ |
| 66 | K21.04342 | 007 994 0041 | (387 262 2273) | 1 | 1./2.VİTES YILDIZ DİŞLİ SEKMANI | RETAINING RING | 2,50mm | | ♦ |
| 66 | K21.04359 | 387 262 2373 | | 1 | 1./2.VİTES YILDIZ DİŞLİ SEKMANI | RETAINING RING | 2,55mm | | ♦ |
| 66 | K21.04345 | 387 262 2473 | | 1 | 1./2.VİTES YILDIZ DİŞLİ SEKMANI | RETAINING RING | 2,60mm | | ♦ |
| 66 | K21.07021 | 387 262 2573 | | 1 | 1./2.VİTES YILDIZ DİŞLİ SEKMANI | RETAINING RING | 2,65mm | | ♦ |
| 66 | K21.04344 | 387 262 7973 | | 1 | 1./2.VİTES YILDIZ DİŞLİ SEKMANI | RETAINING RING | 2,70mm | | ♦ |
| 66 | K21.07022 | 387 262 8073 | | 1 | 1./2.VİTES YILDIZ DİŞLİ SEKMANI | RETAINING RING | 2,75mm | | ♦ |
| 66 | K21.06588 | 387 262 8173 | | 1 | 1./2.VİTES YILDIZ DİŞLİ SEKMANI | RETAINING RING | 2,80mm | | ♦ |
| 67 | K21.03581 | 960 262 3135 | (945 262 3635) | 1 | 1./2.VİTES YILDIZ DİŞLİ | SYNCHRONIZER HUB | | | ♦ |
| | | | (960 262 2235) | | | | | | |
| | | | (930 262 0835) | | | | | | |
| 68 | K21.03582 | 960 262 1523 | (930 262 0123) | 1 | 1./2.VİTES HALKASI | ENGAGING SLEEVE | | | ♦ |
| | | | (930 262 0723) | | | | | | |
| | | | (945 262 5223) | | | | | | |
| 69 | K21.03839 | 945 981 0010 | (018 981 8110) | 1 | 1.VİTES MASURA BİLYA | NEEDLE CAGE | 75X83X48mm | | ♦ |
| | | | (018 981 7610) | | | | | | |
| 70 | K21.06240 | 930 262 1111 | (930 262 1211) | 1 | 1.VİTES DİŞLİSİ 44 DİŞ | GEAR 1st 44 T. | | | ♦ |
| | | | (930 262 0611) | | | | | | |
| | | | (930 262 0211) | | | | | | |
| | | | (930 262 0111) | | | | | | |
| 71 | K21.06995 | 945 262 3935 | | 1 | GERİ VİTES YILDIZ DİŞLİ | SYNCHRONIZER HUB | | | ♦ |
| 72 | K21.03061 | 389 262 1823 | (389 262 0923) | 1 | GERİ VİTES HALKASI | ENGAGING SLEEVE | | | ♦ |
| 73 | K21.03065 | 389 262 0150 | | 1 | GERİ VİTES MASURA BİLYA ÇANAĞI | BEARING RACE | | | ♦ |
| 74 | K21.03813 | 013 981 1810 | (013 981 2610) | 1 | GERİ VİTES MASURA BİLYA | NEEDLE CAGE | 78X86X33mm | | ♦ |
| | | | (013 981 1710) | | | | | | |
| 75 | K21.06044 | 960 262 0033 | | 1 | GERİ VİTES DİŞLİSİ 40 DİŞ | REVERSE GEAR 40 T. | | | ♦ |
| 76 | K21.03861 | 003 980 0202 | | 1 | KAMALI MİL ARKA BİLYA | ROLLER BEARING | 60x130x51mm | | ♦ |
| 77 | K21.03661 | 002 981 8181 | | 1 | KAMALI MİL ARKA BİLYA | ROLLER BEARING | 60X130X35,2mm | | ♦ |
| 78 | K21.04331 | 007 994 1841 | (006 994 9941) | 1 | KAMALI MİL ARKA BİLYA SEKMANI | RETAINING RING | 2,50mm | | ♦ |

NOTES :

NOTLAR :





Original parts names, oem numbers, symbols and descriptions used in this catalogue are for reference purposes only.

# GEARBOX G 280-16 KL / 11,07 - 0,69 NEW

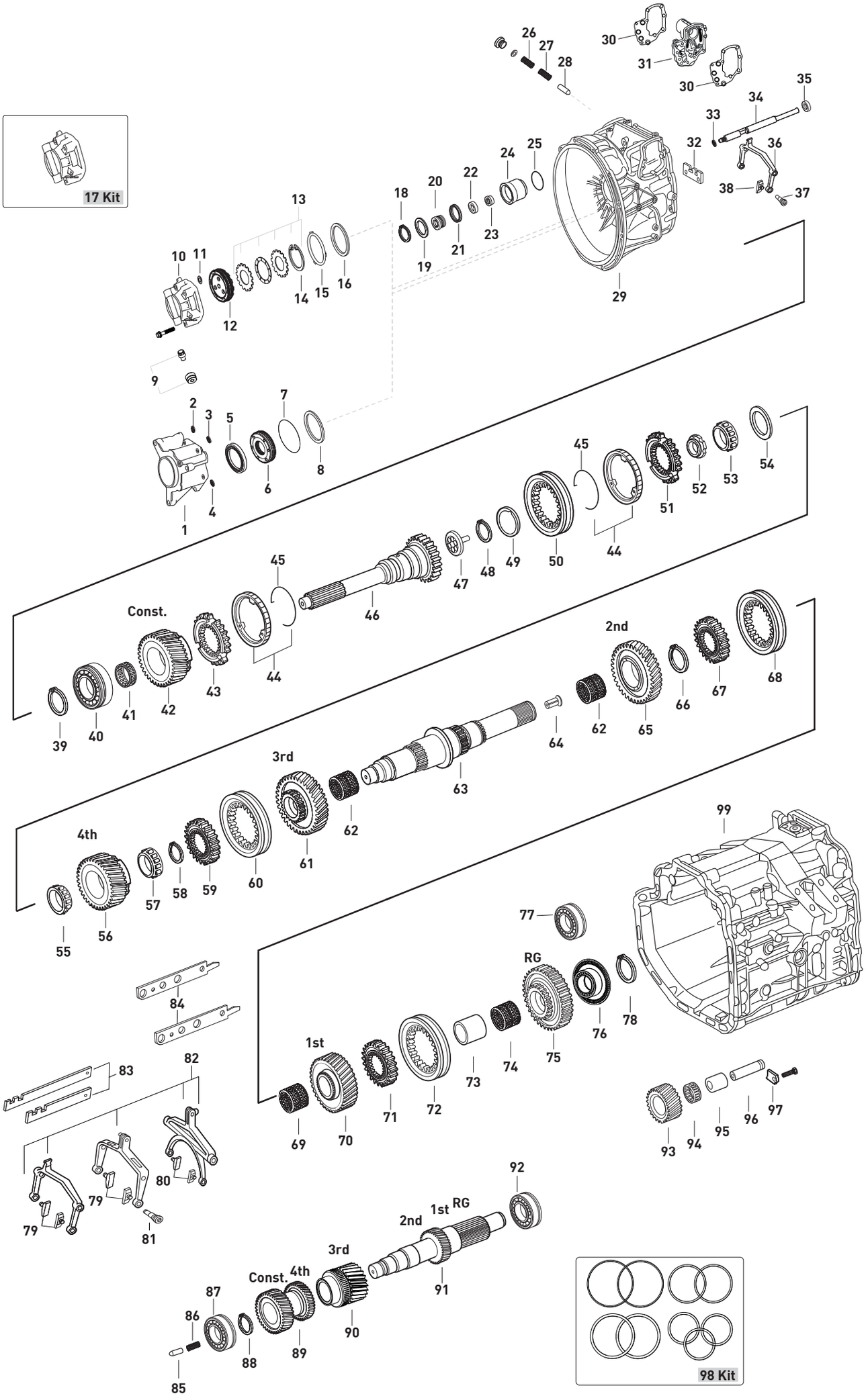




Original parts names, oem numbers, symbols and descriptions used in this catalogue are for reference purposes only.

| Fig. | Kacmaz No | Oem No | Oem Old No | Pcs. | Ürün Tanımı | Description | Sizes | Not | 715523 |
|---|---|---|---|---|---|---|---|---|---|
| 79 | K21.03565 | 947 265 0449 | | 4 | 1./2./3./4.VİTES HİLAL PABUCU | SLIDING PAD | | | ♦ |
| 80 | K21.03410 | 947 265 0249 | (945 265 0149) | 2 | GERİ VİTES HİLAL PABUCU | SLIDING PAD | | | ♦ |
| 81 | K21.04308 | 960 265 0874 | (945 265 1374) | 2 | HİLAL CİVATASI | PIN | | | ♦ |
| | | | (960 265 0674) | | | | | | |
| 82 | | 960 260 4830 | (960 260 3830) | Kit | VİTES HİLAL TAKIMI | REPAIR KIT | | | ♦ |
| 83 | | 960 260 0331 | | Kit | VİTES HİLAL ÇITASI TAKIMI | REPAIR KIT | | | ♦ |
| 84 | | 960 260 0732 | | Kit | VİTES HİLAL ÇITASI TAKIMI | REPAIR KIT | | | ♦ |
| 85 | K21.03492 | 389 267 1174 | (387 267 0074) | 1 | KİLİT FİŞEĞİ | PIN | | | ♦ |
| 86 | K21.03500 | 387 993 4401 | (387 993 2501) | 1 | KİLİT YAYI | SPRING | 9,8X63,3mm | | ♦ |
| 87 | K21.03606 | 015 981 9005 | (014 981 1405) | 1 | GRUP MİLİ ÖN BİLYA | ROLLER BEARING | 50,8X100X35mm | | ♦ |
| | | | (012 981 7405) | | | | | | |
| | | | (012 981 5105) | | | | | | |
| 88 | K21.06425 | 389 994 0041 | | 1 | GRUP MİLİ ÖN BİLYA SEKMANI | RETAINING RING | 2,50mm | | ♦ |
| 89 | K21.06666 | 960 263 0010 | | 1 | TAK.VE 4.VİT.KARŞILIĞI 31/29 DİŞ | DOUBLE GEAR 31/29 T. | | | ♦ |
| 90 | K21.06633 | 960 260 0408 | | 1 | 3.VİTES DİŞLİ KARŞILIĞI 34 DİŞ | GEAR 3rd 34 T. | | | ♦ |
| 91 | K21.06639 | 960 263 0002 | | 1 | GRUP MİLİ 21/16 DİŞ | COUNTER SHAFT 21/16 T. | | | ♦ |
| 92 | K21.03624 | 016 981 1205 | (012 981 9405) | 1 | GRUP MİLİ ARKA BİLYA | ROLLER BEARING | 60X130X33,80mm | | ♦ |
| | | | (012 981 9205) | | | | | | |
| 93 | K21.06048 | 389 263 1031 | | 1 | KÜÇÜK GERİ VİTES DİŞLİSİ 21 DİŞ | REVERSE IDLER GEAR 21 T. | | | ♦ |
| 94 | K21.03838 | 012 981 8910 | (012 981 9010) | 1 | KÜÇÜK GERİ VİTES MASURA BİLYA | NEEDLE CAGE | 42X50X51mm | | ♦ |
| | | | (019 981 1310) | | | | | | |
| 95 | K21.06031 | 389 263 0850 | | 1 | K.GERİ VİTES MASURA BİLYA ÇANAĞI | BUSHING | 18mm | | ♦ |
| 96 | K21.06037 | 976 263 1230 | (976 263 0030) | 1 | KÜÇÜK GERİ VİTES PİMİ | PIN | | | ♦ |
| 97 | K21.07010 | 945 263 0041 | | 1 | KÜÇÜK GERİ VİTES PİM KİLİTLEMESİ | KEY | | | ♦ |
| 98 | K21.04317 | | | Kit | RAYNEL TAKIMI | WASHER KIT | | | ♦ |
| 99 | | 960 261 2829 | | 1 | ŞANZIMAN ORTA GÖVDE | HOUSING | | | ♦ |
| 99 | | 960 260 3423 | | 1 | ŞANZIMAN ORTA GÖVDE | HOUSING | | | ♦ |

NOTES :

NOTLAR :





Original parts names, oem numbers, symbols and descriptions used in this catalogue are for reference purposes only.

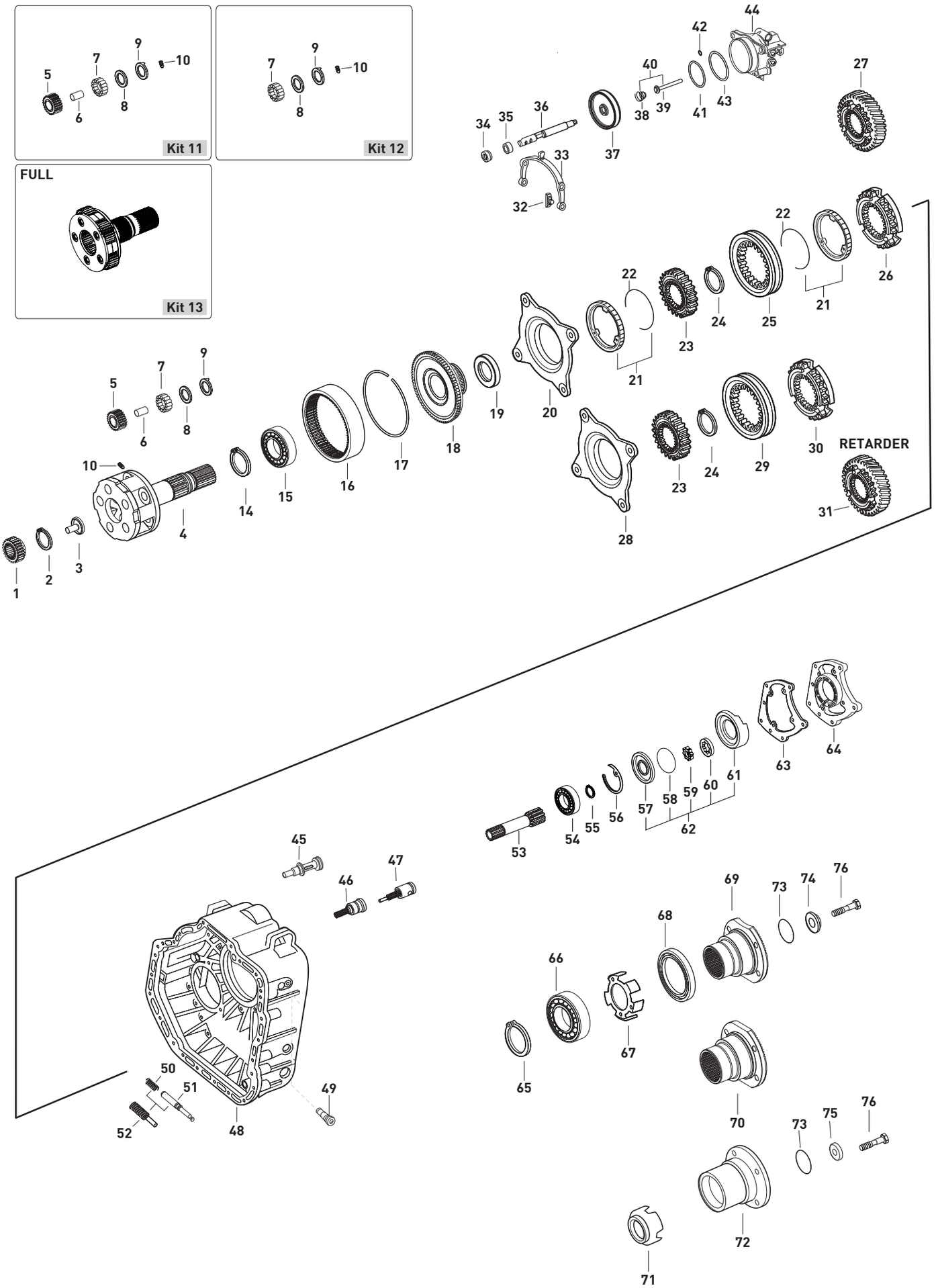






Original parts names, oem numbers, symbols and descriptions used in this catalogue are for reference purposes only.

| Fig. | Kacmaz No | Oem No | Oem Old No | Pcs. | Ürün Tanımı | Description | Sizes | Not | 715523 |
|---|---|---|---|---|---|---|---|---|---|
| 1 | K21.06506 | 960 262 0009 | (948 262 0209) | 1 | GÜNEŞ DİŞLİ 25 DİŞ | SUN GEAR 25 T | | | ♦ |
| 2 | K21.04115 | 000472 060000 | | 1 | HEYKEL YAĞ PİPET SEKMANI | SNAP RING | 2,00mm | | ♦ |
| 3 | K21.03435 | 945 269 0834 | (389 269 4734) | 1 | ŞANZIMAN HEYKELİ YAĞ PİPETİ | OIL TUBE | | | ♦ |
| 4 | K21.03180 | 946 260 3561 | (946 260 3661) | 1 | ŞANZIMAN HEYKELİ (BOŞ) | PLANETARY CARRIER (EMPTY) | | (A) | ♦ |
| | | | (945 260 4561) | | | | | | |
| | | | (945 260 4461) | | | | | | |
| 4 | | 960 260 2861 | | 1 | ŞANZIMAN HEYKELİ (BOŞ) | PLANETARY CARRIER (EMPTY) | | (B) | ♦ |
| 5 | K21.03436 | 945 262 0006 | | 5 | HEYKEL KOZA DİŞLİSİ 28 DİŞ | PLANETARY GEAR 28 T. | | | ♦ |
| 6 | K21.03437 | 389 262 0407 | | 5 | HEYKEL KOZA DİŞLİ PİMİ | PLANETARY GEAR PIN | | | ♦ |
| 7 | K21.03816 | 000 981 4186 | (000 981 4386) | 125 | HEYKEL KOZA DİŞLİ TANE BİLYA | NEEDLE ROLLER | D5X39,6 | | ♦ |
| 8 | K21.04074 | 389 262 0162 | (389 262 6462) | 10 | HEYKEL KOZA DİŞLİ PULU | THRUST WASHER | | | ♦ |
| | | | (389 262 0562) | | | | | | |
| 9 | K21.04075 | 945 262 1162 | (945 262 0162) | 10 | HEYKEL KOZA DİŞLİ PULU | THRUST WASHER | | | ♦ |
| | | | (389 262 1462) | | | | | | |
| 10 | K21.03418 | 000914 006109 | | 5 | HEYKEL KOZA DİŞLİ VİDASI | THREADED PIN | M6X14 | | ♦ |
| 11 | K21.03178 | 946 260 0097 | (655 260 0197) | Kit | HEYKEL KOZA DİŞLİ TAKIMI | PLANETARY GEAR SET | | (A) | ♦ |
| 11 | | 960 260 3097 | | Kit | HEYKEL KOZA DİŞLİ TAKIMI | PLANETARY GEAR SET | | (B) | ♦ |
| 12 | K21.03663 | | | Kit | HEYKEL BİLYA VE PUL TAKIMI | WASHER KIT | | | ♦ |
| 13 | K21.06313 | 945 260 4661 | | Kit | ŞANZIMAN HEYKELİ (DOLU) | PLANETARY CARRIER (FULL) | | (A) | ♦ |
| 14 | K21.06864 | 000472 130000 | | 1 | ÇEMBER DİŞLİ BİLYA SEKMANI | RETAINING RING | 130X4mm | | ♦ |
| 15 | K21.03614 | 008 981 1325 | (004 981 8725) | 1 | ÇEMBER DİŞLİ BİLYASI | ROLLER BEARING | 90X130X14mm | | ♦ |
| 16 | K21.03449 | 945 262 1208 | (945 262 0808) | 1 | ÇEMBER DİŞLİ 85 DİŞ | RING WHEEL 85 T. | | (A) | ♦ |
| 16 | | 960 260 6008 | | 1 | ÇEMBER DİŞLİ 85 DİŞ | RING WHEEL 85 T. | | (B) | ♦ |
| 17 | K21.04253 | 389 262 0773 | | 1 | ÇEMBER DİŞLİ SEKMANI | LOCK RING | | | ♦ |
| 18 | K21.03442 | 930 262 0125 | (389 262 1425) | 1 | PLANET ÇAN DİŞLİ 85 DİŞ | CARRIER HUB 85 T. | | | ♦ |
| 19 | K21.04076 | 389 262 0251 | | 1 | ŞANZIMAN HEYKELİ ARA PULU | SPACER RING | | | ♦ |
| 20 | K21.03037 | 947 260 3036 | (947 260 0836) | 1 | TABLA SENKROMENÇ | FOLLOWER RING | | | ♦ |
| 21 | K21.03185 | 947 260 0945 | | 2 | AĞIR SERİ FRENLEME (Mo) | SYNCHRONIZING CONE / Mo | | | ♦ |
| 21 | K21.06273 | 947 260 3045 | | 2 | AĞIR SERİ FRENLEME (C) | SYNCHRONIZING CONE / C | | | ♦ |
| 22 | K21.03077 | 389 262 0293 | | 2 | FRENLEME TELİ | SPRING | | | ♦ |
| 23 | K21.03079 | 389 262 4935 | (389 262 2035) | 1 | AĞIR SERİ YILDIZ DİŞLİ 73 DİŞ | SYNCHRONIZER HUB 73 T. | | | ♦ |
| | | | (400 262 0335) | | | | | | |
| 24 | K21.04356 | 000471 120000 | | 1 | AĞIR SERİ YILDIZ DİŞLİ SEKMANI | RETAINING RING | | | ♦ |
| 25 | K21.03033 | 945 262 6923 | (930 262 0623) | 1 | AĞIR SERİ HALKA | ENGAGING SLEEVE | | | ♦ |
| 26 | K21.03186 | 945 262 3834 | | 1 | SERİ SENKROMENÇ | ENGAGING RING | | | ♦ |
| 27 | K21.06058 | 930 264 0420 | | 1 | RETARDER DİŞLİSİ 59 DİŞ | RETARDER GEAR 59 T. | | | ♦ |
| 28 | K21.06592 | 960 260 2336 | | 1 | TABLA SENKROMENÇ | FOLLOWER RING | | | ♦ |
| 29 | K21.06594 | 960 262 1323 | | 1 | AĞIR SERİ HALKA | ENGAGING SLEEVE | | | ♦ |
| 30 | | 960 262 2834 | | 1 | SERİ SENKROMENÇ | ENGAGING RING | | | ♦ |
| 31 | K21.06565 | 960 264 2720 | | 1 | RETARDER DİŞLİSİ | RETARDER GEAR | | | ♦ |
| 31 | K21.06993 | 960 264 2820 | | 1 | RETARDER DİŞLİSİ | RETARDER GEAR | | | ♦ |
| 31 | | 960 264 0020 | | 1 | RETARDER DİŞLİSİ 64 DİŞ | RETARDER GEAR 64 T. | | | ♦ |
| 32 | K21.03431 | 960 265 0049 | (947 265 0349) | 2 | AĞIR SERİ HİLAL PABUCU | SLIDING PAD | | | ♦ |
| | | | (389 265 2749) | | | | | | |
| 33 | K21.06324 | 947 265 1901 | (947 265 0901) | 1 | AĞIR SERİ HİLALİ | SHIFTING FORK | | | ♦ |
| 34 | K21.03523 | 000 267 0197 | (000 267 0397) | 1 | AĞIR SERİ HİLAL MİL KEÇESİ | OIL SEAL | 22X32X8mm | | ♦ |
| 35 | K21.04178 | 387 267 0650 | (387 267 0250) | 1 | AĞIR SERİ HİLAL MİL BURCU | BUSHING | 34x22x8mm | | ♦ |
| 36 | | 945 267 2117 | (389 267 7317) | 1 | AĞIR SERİ HİLAL MİLİ | SHIFTING ROD | | | ♦ |
| 36 | | 960 267 7217 | (945 267 3217) | 1 | AĞIR SERİ HİLAL MİLİ | SHIFTING ROD | | | ♦ |
| 37 | K21.06497 | 960 267 0118 | | 1 | AĞIR SERİ HİLAL MİL PİSTONU | PISTON | tire sticked | | ♦ |
| 38 | K21.04255 | 008 993 0801 | (000 993 6705) | 1 | OKUYUCU MİL YAYI | SPRING | 9,7x7,7x8,1mm | | ♦ |
| 39 | K21.04257 | 000 543 5785 | | 1 | OKUYUCU MİLİ | MAGNETIC PISTON | | | ♦ |
| 40 | K21.07049 | 960 543 0285 | | Kit | OKUYUCU MİL-YAY TAKIMI | REPAIR KIT | | | ♦ |

NOTES :
Parts coded with alphabetic letters are used together.

NOTLAR :
Alfabetik harf ile kodlanan parçalar birlikte kullanılır.





Original parts names, oem numbers, symbols and descriptions used in this catalogue are for reference purposes only.

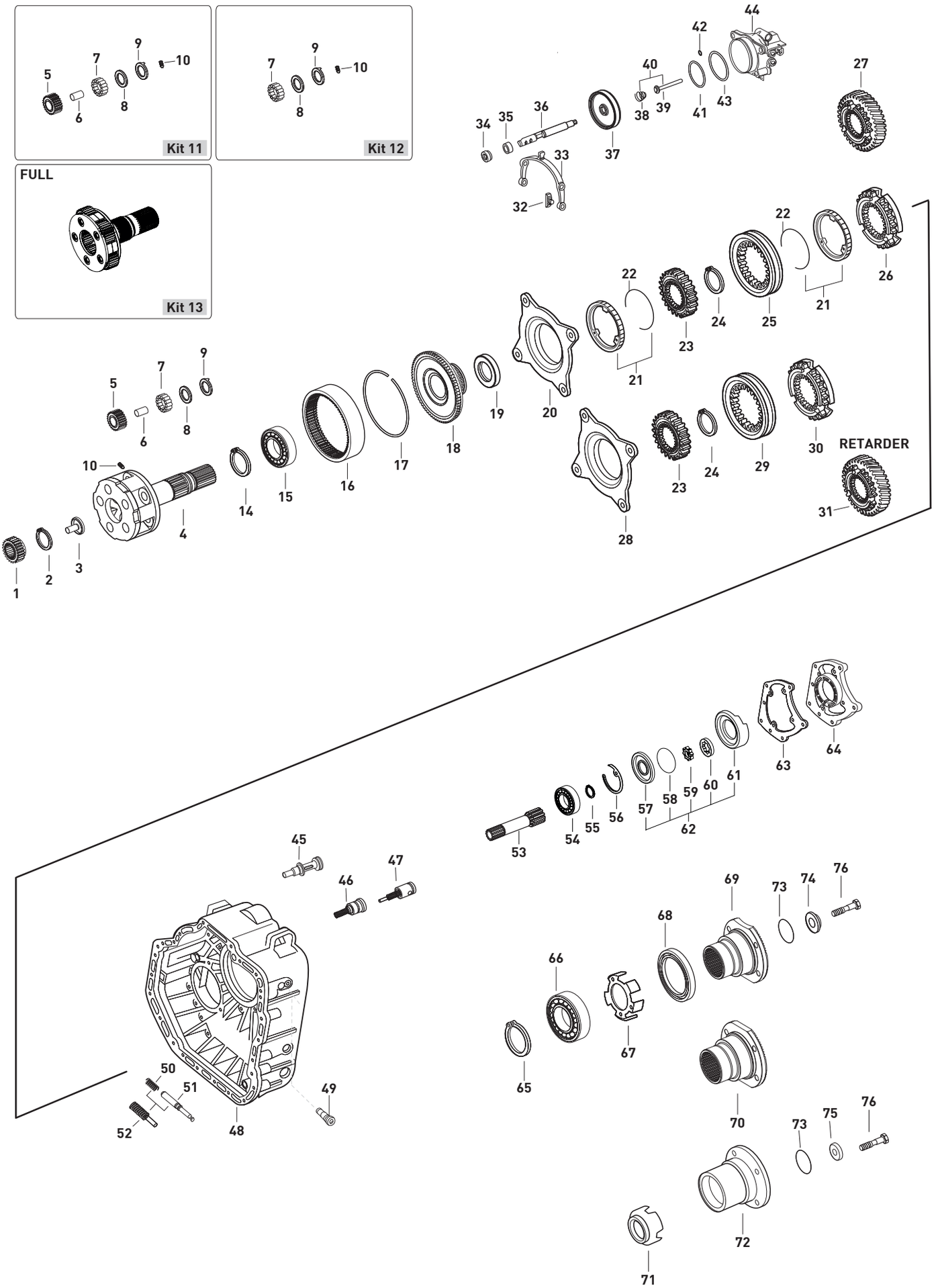






Original parts names, oem numbers, symbols and descriptions used in this catalogue are for reference purposes only.

| Fig. | Kacmaz No | Oem No | Oem Old No | Pcs. | Ürün Tanımı | Description | Sizes | Not | 715523 |
|---|---|---|---|---|---|---|---|---|---|
| 41 | K21.06399 | 013 997 7548 | | 1 | AĞIR SERİ SİLİNDİR ORİNGİ | O-RING | 89,5X3mm | | ♦ |
| 42 | K21.06636 | 015 997 4048 | (020 997 8748) | 1 | AĞIR SERİ SİLİNDİR ORİNGİ | O-RING | 5X3mm | | ♦ |
| 43 | K21.06968 | 017 997 6545 | | 1 | AĞIR SERİ SİLİNDİR ORİNGİ | O-RING | 96X1,5mm | | ♦ |
| 44 | | 003 260 5663 | (003 260 3963) | 1 | AĞIR SERİ SİLİNDİRİ | SHIFT CYLINDER | | | ♦ |
| | | | (003 260 4063) | | | | | | |
| 45 | | 960 260 3257 | (960 260 1157) | 1 | YAĞ BASINÇ VALFİ ALIN FİBERİ | WASHER | | | ♦ |
| 46 | K21.06988 | 960 260 2257 | | Kit | YAĞ BASINÇ VALFİ KOMPLE | VALVE KIT | | | ♦ |
| 47 | K21.06989 | 960 260 2157 | (960 260 3757) | Kit | YAĞ BASINÇ VALFİ KOMPLE | VALVE KIT | | | ♦ |
| 48 | K21.07000 | 960 260 5912 | (960 260 0112) | 1 | ŞANZIMAN ARKA GÖVDE | HOUSING | | | ♦ |
| 48 | | 960 260 2112 | | 1 | ŞANZIMAN ARKA GÖVDE | HOUSING | | | ♦ |
| 48 | | 960 260 5423 | (960 260 4923) | 1 | ŞANZIMAN ARKA GÖVDE | HOUSING | | | ♦ |
| 49 | K21.04307 | 960 265 0774 | (945 265 1274) | 2 | HİLAL CİVATASI | PIN | | | ♦ |
| | | | (945 265 2974) | | | | | | |
| | | | (945 265 2774) | | | | | | |
| 50 | K21.06004 | 945 267 0274 | (389 267 0274) | 1 | AĞIR SERİ KİLİTLEME MİLİ | PIN | | | ♦ |
| 51 | K21.06006 | 389 993 3401 | (389 993 0601) | 1 | AĞIR SERİ KİLİTLEME YAYI | SPRING | | | ♦ |
| 52 | | 960 260 0373 | | 1 | AĞIR SERİ KİLİTLEME MİL TAKIMI | REPAIR KIT | | | ♦ |
| 53 | | 960 269 0010 | | 1 | YAĞ POMPA MİLİ | OIL PUMP SHAFT | | | ♦ |
| 53 | | 960 269 0110 | | 1 | YAĞ POMPA MİLİ | OIL PUMP SHAFT | | | ♦ |
| 54 | K21.03648 | 010 981 9025 | (010 981 8425) | 1 | PTO MİL BİLYASI | ROLLLER BEARING | 17X35X10mm | | ♦ |
| | | | (008 981 5425) | | | | | | |
| | | | (008 981 3425) | | | | | | |
| 55 | | 912009 045100 | | 1 | PTO MİL BİLYA SEKMANI | RETAINING RING | | | ♦ |
| 56 | K21.94304 | | | 1 | YAĞ POMPA PULU | SPACER WASHER | 0,70mm | | ♦ |
| 56 | K21.04304 | 389 262 6254 | | 1 | YAĞ POMPA PULU | SPACER WASHER | 0,80mm | | ♦ |
| 56 | K21.04303 | 389 262 5954 | | 1 | YAĞ POMPA PULU | SPACER WASHER | 0,90mm | | ♦ |
| 56 | K21.04302 | 389 262 5754 | | 1 | YAĞ POMPA PULU | SPACER WASHER | 1,00mm | | ♦ |
| 56 | K21.04301 | 389 262 5554 | | 1 | YAĞ POMPA PULU | SPACER WASHER | 1,10mm | | ♦ |
| 56 | K21.04305 | 389 262 5354 | | 1 | YAĞ POMPA PULU | SPACER WASHER | 1,20mm | | ♦ |
| 57 | K21.03412 | 945 269 0201 | (389 269 2501) | 1 | YAĞ POMPA KAPAĞI | OIL PUMP COVER | | | ♦ |
| 58 | K21.03511 | 029 997 5748 | | 1 | YAĞ POMPA ORİNGİ | O-RING | 112X2,5mm | | ♦ |
| 59 | K21.03413 | 389 269 1406 | (389 269 1506) | 1 | YAĞ POMPA İÇ ROTOR | OIL PUMP GEAR | | | ♦ |
| | | | (945 260 0090) | | | | | | |
| 60 | K21.03414 | 389 269 0706 | (389 269 1206) | 1 | YAĞ POMPA DIŞ ROTOR | ROTOR | | | ♦ |
| 61 | K21.03478 | 947 269 1001 | | 1 | YAĞ POMPA GÖVDESİ | OIL PUMP HOUSING | | | ♦ |
| 62 | K21.03475 | 389 260 0790 | | 1 | YAĞ POMPASI | OIL PUMP | | | ♦ |
| 63 | K21.03667 | 945 261 0680 | (945 261 0580) | 1 | PTO KAPAK CONTASI | GASKET | | | ♦ |
| | | | (945 261 0080) | | | | | | |
| 64 | K21.03566 | 945 261 1033 | (945 261 1433) | 1 | PTO KAPAĞI | COVER | | | ♦ |
| 65 | K21.06865 | 000472 150000 | | 1 | ŞANZIMAN HEYKEL BİLYA SEKMANI | RETAINING RING | | | ♦ |
| 66 | K21.03625 | 008 981 3025 | (008 981 5225) | 1 | ŞANZIMAN ARKA BİLYA | ROLLER BEARING | 80X150X28mm | | ♦ |
| | | | (007 981 3325) | | | | | | |
| 67 | K21.06947 | 930 262 1428 | (930 262 0128) | 1 | ŞANZIMAN KM DEVİR SACI | PULSE STAR | | | ♦ |
| 68 | K21.03512 | 015 997 7846 | (023 997 1647) | 1 | ŞANZIMAN ARKA KEÇE | OIL SEAL | 95X115X15,5mm | | ♦ |
| 69 | | 960 262 0045 | | 1 | ŞANZIMAN FLANŞI | COMPANION FLANGE | Ø180mm | | ♦ |
| 69 | | 960 262 0145 | | 1 | ŞANZIMAN FLANŞI | COMPANION FLANGE | Ø200mm | | ♦ |
| 70 | K21.06052 | 945 262 0245 | | 1 | ŞANZIMAN FLANŞI | COMPANION FLANGE | 4-H, Ø200mm | | ♦ |
| 71 | K21.04144 | 387 262 0928 | | 1 | ŞANZIMAN KM DEVİR SACI | PULSE STAR | | | ♦ |
| 72 | | 947 262 0345 | (976 262 0345) | 1 | ŞANZIMAN FLANŞI | COMPANION FLANGE | Ø150mm | | ♦ |
| 73 | | 025 997 5345 | | 1 | ŞANZIMAN FLANŞ ORİNGİ | O-RING | 70,8X5,1mm | | ♦ |
| 74 | K21.04214 | 945 262 0762 | | 1 | ŞANZIMAN FLANŞI ALIN PULU | THRUST WASHER | 93X20mm | | ♦ |
| 75 | | 976 262 0362 | (976 262 0162) | 1 | ŞANZ.FLANŞI ALIN PULU | THRUST WASHER | | | ♦ |
| 76 | K21.06280 | 000000 006750 | (000000 005728) | 1 | ŞANZ.FLANŞI ALIN VİDASI | SCREW | M20X1,5X80mm | | ♦ |

NOTES :
Parts coded with alphabetic letters are used together.

NOTLAR :
Alfabetik harf ile kodlanan parçalar birlikte kullanılır.





Original parts names, oem numbers, symbols and descriptions used in this catalogue are for reference purposes only.

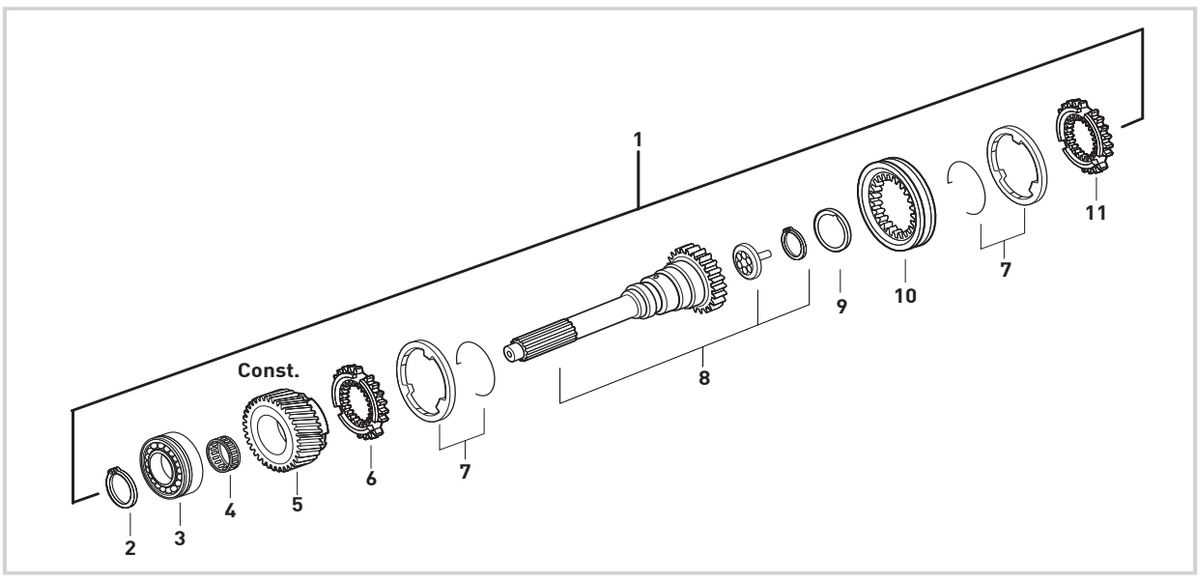


| Fig. | Kacmaz No. | Oem No | Oem Old No | Pcs. | Ürün Tanımı | Description | Sizes |
|---|---|---|---|---|---|---|---|
| 1 | K21.06395 | | | Kit | PRİZDİREK KOMPLE | INPUT SHAFT COMPLETE | |
| 2 | K21.04346 | 387 262 8773 | | 1 | PRİZDİREK ÖN BİLYA SEKMANI | RETAINING RING | 3,20mm |
| 3 | K21.03618 | 011 981 1305 | (014 981 9005) | 1 | PRİZDİREK ÖN BİLYA | ROLLER BEARING | 75X140X34,25mm |
| 4 | K21.03818 | 018 981 8210 | (018 981 6410) | 1 | TAKVİYE MASURA BİLYA | NEEDLE CAGE | 84X90X39,5mm |
| 5 | K21.06325 | 930 262 3217 | (930 262 0417) | 1 | TAKVİYE DİŞLİSİ 32 DİŞ | CONSTANT GEAR 32 T. | |
| 6 | K21.03146 | 945 262 8234 | (945 262 5434) | 1 | TAKVİYE SENKROMENÇ | ENGAGING RING | |
| 7 | K21.06299 | 947 260 3545 | (947 260 5145) | 2 | TAKVİYE FRENLEME (C) | SYNCHRONIZING CONE / C | |
| 8 | K21.06284 | 930 262 1003 | (930 262 0003) | 1 | PRİZDİREK 66 DİŞ | INPUT SHAFT 66 T. | |
| 9 | K21.03513 | 001 262 0262 | (000 262 8662) | 1 | PRİZDİREK ARKA KEÇE | OIL SEAL | 73,5X101X7mm |
| 10 | K21.03151 | 945 262 6523 | (930 262 0523) | 1 | TAKVİYE HALKA | ENGAGING SLEEVE | |
| 11 | K21.03576 | 930 262 0234 | (930 262 0034) | 1 | TAKVİYE SENKROMENÇ | ENGAGING RING | |



**Original parts names, oem numbers, symbols and descriptions used in this catalogue are for reference purposes only.**

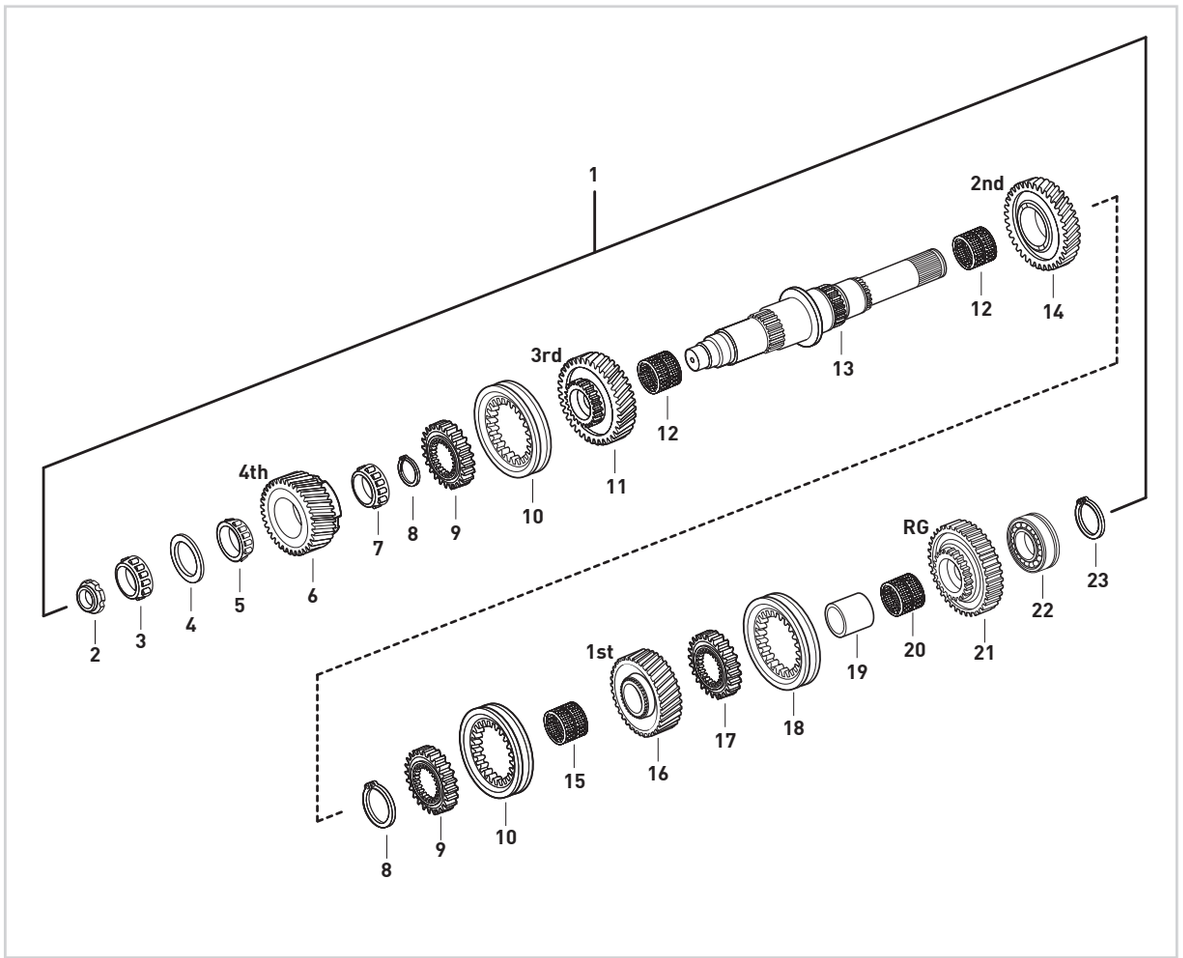


| Fig. | Kacmaz No. | Oem No | Oem Old No | Pcs. | Ürün Tanımı | Description | Sizes |
|---|---|---|---|---|---|---|---|
| 1 | K21.06677 | | | Kit | KAMALI MİL KOMPLE | MAIN SHAFT COMPLETE | |
| 2 | K21.03432 | 945 990 0250 | (945 990 0150) | 1 | KAMALI MİL SOMUNU | NUT | M30X1,5 |
| 3 | K21.03632 | 020 981 5205 | (017 981 1305) | 1 | KAMALI MİL UÇ BİLYA | ROLLER BEARING | 39,69X40,39mm |
| 4 | K21.04025 | 389 262 3252 | | 1 | KAMALI MİL AYAR PULU | THRUST WASHER | 2,00mm |
| 5 | K21.03620 | 017 981 5105 | (015 981 6105) | 1 | 3.VİTES DİŞLİ ÖN BİLYA | ROLLER BEARING | 50X41,3mm |
| 6 | K21.06504 | 930 262 3817 | | 1 | 4.VİTES DİŞLİSİ 36 DİŞ | GEAR 4th 36 T. | |
| 7 | K21.03664 | 017 981 7105 | | 1 | 3.VİTES DİŞLİ ARKA BİLYA | ROLLER BEARING | 55X29,8mm |
| 8 | K21.04344 | 387 262 7973 | | 2 | 1./2./3./4.VİT. YILDIZ DİŞLİ SEKMANI | RETAINING RING | 2,70mm |
| 9 | K21.03581 | 960 262 3135 | (945 262 3635) | 2 | 1./2./3./4.VİTES YILDIZ DİŞLİ | SYNCHRONIZER HUB | |
| 10 | K21.03582 | 960 262 1523 | (930 262 0123) | 2 | 1./2./3./4.VİTES HALKA | ENGAGING SLEEVE | |
| 11 | K21.06327 | 930 262 0513 | (930 262 0013) | 1 | 3.VİTES DİŞLİSİ 29 DİŞ | GEAR 3rd 29 T. | |
| 12 | K21.03810 | 018 981 6610 | (010 981 5310) | 2 | 2./3.VİTES MASURA BİLYA | NEEDLE CAGE | 85X93X53mm |
| 13 | K21.06502 | 960 262 0005 | | 1 | KAMALI MİL | MAIN SHAFT | |
| 14 | K21.06043 | 945 262 6812 | | 1 | 2.VİTES DİŞLİSİ 39 DİŞ | GEAR 2nd 39 T. | |
| 15 | K21.03839 | 945 981 0010 | (018 981 8110) | 1 | 1.VİTES MASURA BİLYA | NEEDLE CAGE | 75X83X48mm |
| 16 | K21.06240 | 930 262 1111 | (930 262 1211) | 1 | 1.VİTES DİŞLİSİ 44 DİŞ | GEAR 1st 44 T. | |
| 17 | K21.06995 | 945 262 3935 | | 1 | GERİ VİTES YILDIZ DİŞLİ | SYNCHRONIZER HUB | |
| 18 | K21.03061 | 389 262 1823 | (389 262 0923) | 1 | GERİ VİTES HALKASI | ENGAGING SLEEVE | |
| 19 | K21.03065 | 389 262 0150 | | 1 | GERİ VİTES MASURA BİLYA ÇANAĞI | BEARING RACE | |
| 20 | K21.03813 | 013 981 1810 | (013 981 2610) | 1 | GERİ VİTES MASURA BİLYA | NEEDLE CAGE | 78X86X33mm |
| 21 | K21.06044 | 960 262 0033 | | 1 | GERİ VİTES DİŞLİSİ 40 DİŞ | REVERSE GEAR 40 T. | |
| 22 | K21.03661 | 002 981 8181 | | 1 | KAMALI MİL ARKA BİLYA | ROLLER BEARING | 60X130X35,2mm |
| 23 | K21.04331 | 007 994 1841 | (006 994 9941) | 1 | KAMALI MİL ARKA BİLYA SEKMANI | RETAINING RING | 2,50mm |



Original parts names, oem numbers, symbols and descriptions used in this catalogue are for reference purposes only.

# GEARBOX G 280 - 16 KL / 11,07 - 0,69 MAIN SHAFT COMPLETE

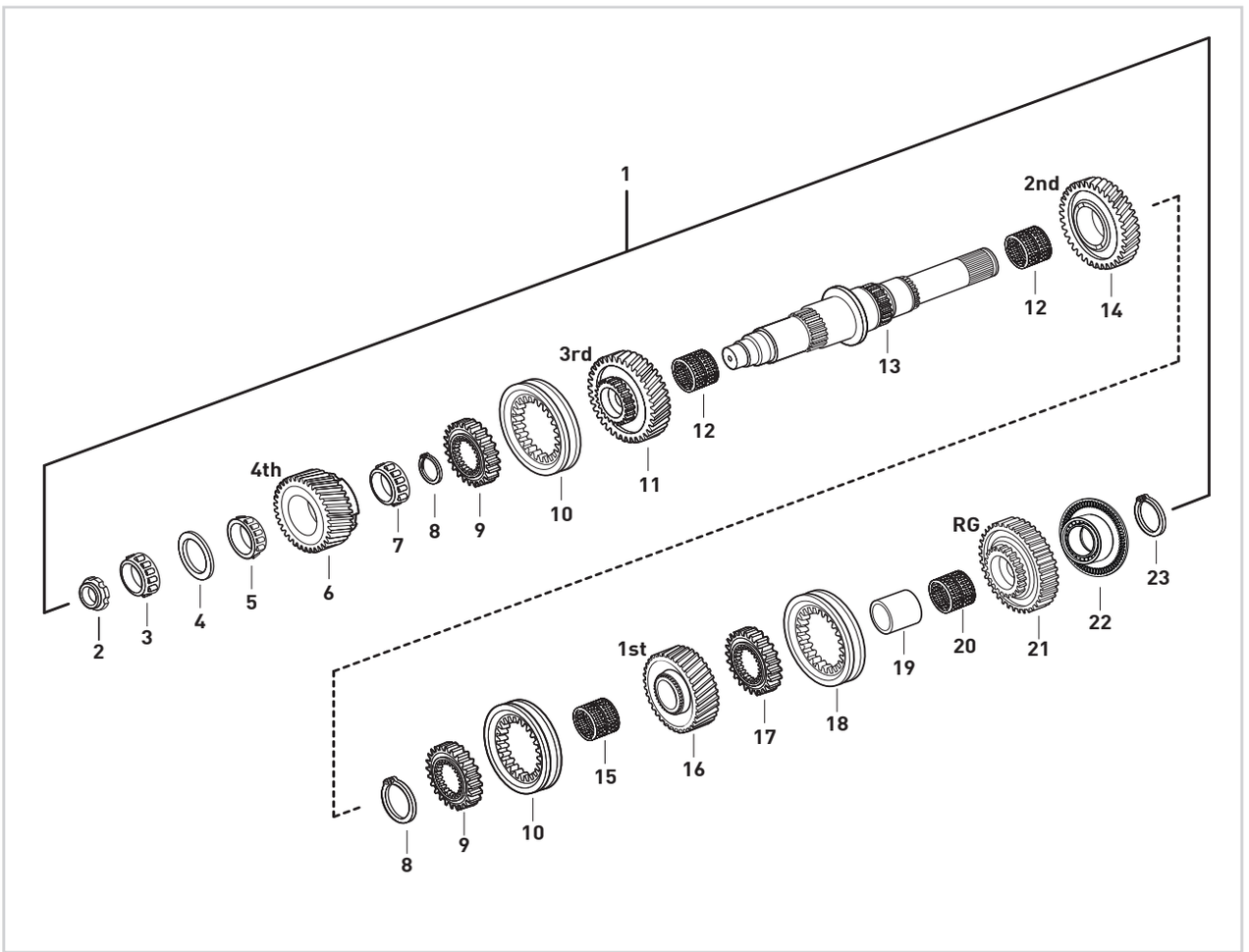


| Fig. | Kacmaz No. | Oem No | Oem Old No | Pcs. | Ürün Tanımı | Description | Sizes |
|---|---|---|---|---|---|---|---|
| 1 | K21.03694 | | | Kit | KAMALI MİL KOMPLE | MAIN SHAFT COMPLETE | |
| 2 | K21.03432 | 945 990 0250 | (945 990 0150) | 1 | KAMALI MİL SOMUNU | NUT | M30X1,5 |
| 3 | K21.03632 | 020 981 5205 | (017 981 1305) | 1 | KAMALI MİL UÇ BİLYA | ROLLER BEARING | 39,69X40,39mm |
| 4 | K21.04025 | 389 262 3252 | | 1 | KAMALI MİL AYAR PULU | THRUST WASHER | 2,00mm |
| 5 | K21.03620 | 017 981 5105 | (015 981 6105) | 1 | 3.VİTES DİŞLİ ÖN BİLYA | ROLLER BEARING | 50X41,3mm |
| 6 | K21.06504 | 930 262 3817 | | 1 | 4.VİTES DİŞLİSİ 36 DİŞ | GEAR 4th 36 T. | |
| 7 | K21.03664 | 017 981 7105 | | 1 | 3.VİTES DİŞLİ ARKA BİLYA | ROLLER BEARING | 55X29,8mm |
| 8 | K21.04344 | 387 262 7973 | | 2 | 1./2./3./4.VİT.YILDIZ DİŞLİ SEKMANI | RETAINING RING | 2,70mm |
| 9 | K21.03581 | 960 262 3135 | (945 262 3635) | 2 | 1./2./3./4.VİTES YILDIZ DİŞLİ | SYNCHRONIZER HUB | |
| 10 | K21.03582 | 960 262 1523 | (930 262 0123) | 2 | 1./2./3./4.VİTES HALKA | ENGAGING SLEEVE | |
| 11 | K21.06327 | 930 262 0513 | (930 262 0013) | 1 | 3.VİTES DİŞLİSİ 29 DİŞ | GEAR 3rd 29 T. | |
| 12 | K21.03810 | 018 981 6610 | (010 981 5310) | 2 | 2./3.VİTES MASURA BİLYA | NEEDLE CAGE | 85X93X53mm |
| 13 | K21.06502 | 960 262 0005 | | 1 | KAMALI MİL | MAIN SHAFT | |
| 14 | K21.06043 | 945 262 6812 | | 1 | 2.VİTES DİŞLİSİ 39 DİŞ | GEAR 2nd 39 T. | |
| 15 | K21.03839 | 945 981 0010 | (018 981 8110) | 1 | 1.VİTES MASURA BİLYA | NEEDLE CAGE | 75X83X48mm |
| 16 | K21.06240 | 930 262 1111 | (930 262 1211) | 1 | 1.VİTES DİŞLİSİ 44 DİŞ | GEAR 1st 44 T. | |
| 17 | K21.06995 | 945 262 3935 | | 1 | GERİ VİTES YILDIZ DİŞLİ | SYNCHRONIZER HUB | |
| 18 | K21.03061 | 389 262 1823 | (389 262 0923) | 1 | GERİ VİTES HALKASI | ENGAGING SLEEVE | |
| 19 | K21.03065 | 389 262 0150 | | 1 | GERİ VİTES MASURA BİLYA ÇANAĞI | BEARING RACE | |
| 20 | K21.03813 | 013 981 1810 | (013 981 2610) | 1 | GERİ VİTES MASURA BİLYA | NEEDLE CAGE | 78X86X33mm |
| 21 | K21.06044 | 960 262 0033 | | 1 | GERİ VİTES DİŞLİSİ 40 DİŞ | REVERSE GEAR 40 T. | |
| 22 | K21.03861 | 003 980 0202 | | 1 | KAMALI MİL ARKA BİLYA | ROLLER BEARING | 60x130x51mm |
| 23 | K21.04331 | 007 994 1841 | (006 994 9941) | 1 | KAMALI MİL ARKA BİLYA SEKMANI | RETAINING RING | 2,50mm |



**Original parts names, oem numbers, symbols and descriptions used in this catalogue are for reference purposes only.**

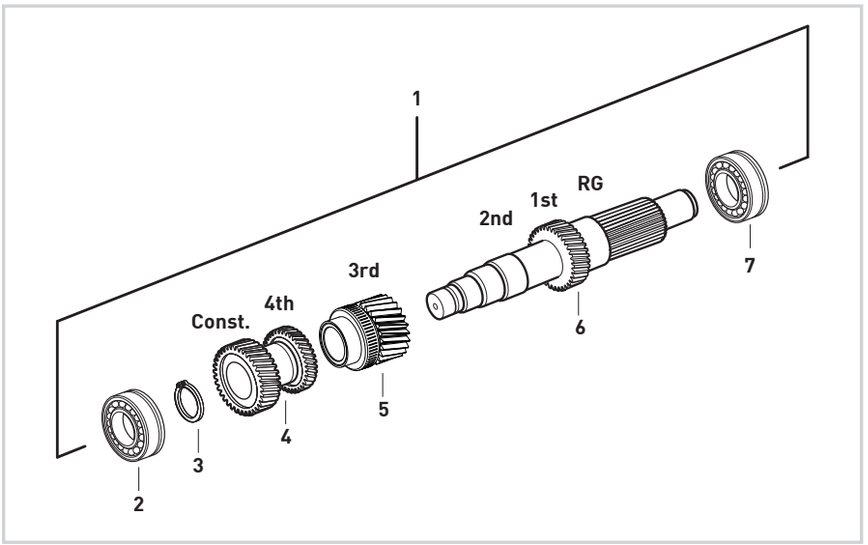


| Fig. | Kacmaz No. | Oem No | Oem Old No | Pcs. | Ürün Tanımı | Description | Sizes |
|---|---|---|---|---|---|---|---|
| 1 | K21.03695 | | | Kit | GRUP MİLİ KOMPLE | COUNTER SHAFT COMP. | |
| 2 | K21.03606 | 015 981 9005 | (014 981 1405) | 1 | GRUP MİLİ ÖN BİLYA | ROLLER BEARING | 50,8X100X35mm |
| 3 | K21.06425 | 389 994 0041 | | 1 | GRUP MİLİ ÖN BİLYA SEKMANI | RETAINING RING | 2,50mm |
| 4 | K21.06666 | 960 263 0010 | | 1 | TAK.VE 4.VİT.KARŞILIĞI 31/29 DİŞ | DOUBLE GEAR 31/29 T. | |
| 5 | K21.06633 | 960 260 0408 | | 1 | 3.VİTES DİŞLİ KARŞILIĞI 34 DİŞ | GEAR 3rd 34 T | |
| 6 | K21.06639 | 960 263 0002 | | 1 | GRUP MİLİ 21/16 DİŞ | COUNTER SHAFT 21/16 T | |
| 7 | K21.03624 | 016 981 1205 | (012 981 9405) | 1 | GRUP MİLİ ARKA BİLYA | ROLLER BEARING | 60X130X33,8mm |





Original parts names, oem numbers, symbols and descriptions used in this catalogue are for reference purposes only.

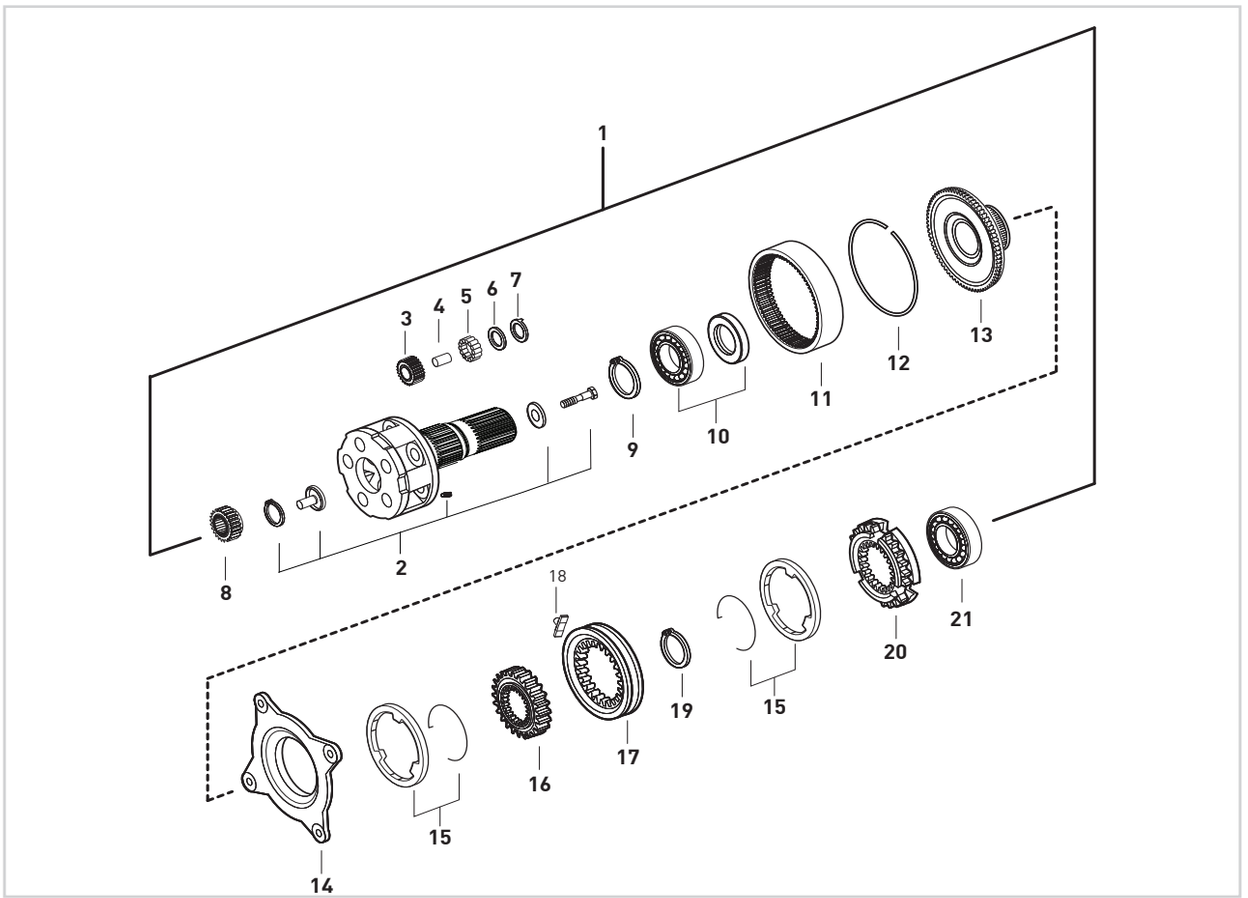


| Fig. | Kacmaz No. | Oem No | Oem Old No | Pcs. | Ürün Tanımı | Description | Sizes |
|---|---|---|---|---|---|---|---|
| 1 | K21.03696 | | | Kit | AĞIR SERİ ARKA AKTARMA KOMPLE | PLANETARY CARRIER COMPLETE | |
| 2 | K21.03180 | 946 260 3561 | (946 260 3661) | 1 | ŞANZIMAN HEYKELİ (BOŞ) | PLANETARY CARRIER (EMPTY) | |
| | | | (945 260 4561) | | | | |
| | | | (945 260 4461) | | | | |
| 3 | K21.03436 | 945 262 0006 | | 5 | HEYKEL KOZA DİŞLİSİ 28 DİŞ | PLANETARY GEAR 28 T. | |
| 4 | K21.03437 | 389 262 0407 | | 5 | HEYKEL KOZA DİŞLİ PİMİ | PLANETARY GEAR PIN | |
| 5 | K21.03816 | 000 981 4186 | (000 981 4386) | 125 | HEYKEL KOZA DİŞLİ TANE BİLYA | NEEDLE ROLLER | D5X39,6 |
| 6 | K21.04074 | 389 262 0162 | (389 262 6462) | 10 | HEYKEL KOZA DİŞLİ PULU | THRUST WASHER | |
| 7 | K21.04075 | 945 262 1162 | (945 262 0162) | 10 | HEYKEL KOZA DİŞLİ PULU | THRUST WASHER | |
| 8 | K21.06506 | 960 262 0009 | (948 262 0209) | 1 | GÜNEŞ DİŞLİ 25 DİŞ | SUN GEAR 25 T. | |
| 9 | K21.06864 | 000472 130000 | | 1 | ÇEMBER DİŞLİ BİLYA SEKMANI | RETAINING RING | 130x4mm |
| 10 | K21.03614 | 008 981 1325 | (004 981 8725) | 1 | ÇEMBER DİŞLİ BİLYASI | ROLLER BEARING | 90X130X14mm |
| 11 | K21.03449 | 945 262 1208 | (945 262 0808) | 1 | ÇEMBER DİŞLİ 85 DİŞ | RING WHEEL 85 T. | |
| 12 | K21.04253 | 389 262 0773 | | 1 | ÇEMBER DİŞLİ SEKMANI | LOCK RING | |
| 13 | K21.03442 | 930 262 0125 | (389 262 1425) | 1 | PLANET ÇAN DİŞLİ 85 DİŞ | CARRIER HUB 85 T. | |
| 14 | K21.03037 | 947 260 3036 | (947 260 0836) | 1 | TABLA SENKROMENÇ | FOLLOWER RING | |
| 15 | K21.03185 | 947 260 0945 | | 2 | AĞIR SERİ FRENLEME (Mo) | SYNCHRONIZING CONE / Mo | |
| 16 | K21.03079 | 389 262 4935 | (389 262 2035) | 1 | AĞIR SERİ YILDIZ DİŞLİ 73 DİŞ | SYNCHRONIZER HUB 73 T. | |
| 17 | K21.03033 | 945 262 6923 | (930 262 0623) | 1 | AĞIR SERİ SENKROMENÇ HALKA | ENGAGING SLEEVE | |
| 18 | K21.03431 | 960 265 0049 | (947 265 0349) | 2 | AĞIR SERİ HİLAL PABUCU | SLIDING PAD | |
| 19 | K21.04356 | 000471 120000 | | 1 | AĞIR SERİ YILDIZ DİŞLİ SEKMANI | RETAINING RING | |
| 20 | K21.03186 | 945 262 3834 | | 1 | SERİ SENKROMENÇ | ENGAGING RING | |
| 21 | K21.03625 | 008 981 3025 | (008 981 5225) | 1 | ŞANZIMAN ARKA BİLYA | ROLLER BEARING | 80X150X28mm |



**Original parts names, oem numbers, symbols and descriptions used in this catalogue are for reference purposes only.**

| Fig. | Kacmaz No. | Oem No | Oem Old No | Pcs. | Ürün Tanımı | Description |
|---|---|---|---|---|---|---|
| 1 | K21.06969 | 960 264 0105 | | 1 | PTO MİLİ | INTERM.SHAFT |
| 2 | K21.03558 | 947 264 0287 | | 1 | YAĞ POMPA KAPAĞI | OIL PUMP COVER |
| 3 | K21.03613 | 004 981 9225 | (004 981 8625) | 1 | PTO MİL BİLYASI | ROLLER BEARING |
| 4 | K21.06964 | 000471 045000 | (003 994 3741) | 1 | PTO MİL BİLYA SEKMANI | RETAINING RING |
| 5 | K21.06998 | 017 981 1705 | | 1 | PTO BORU DİŞLİ BİLYASI | ROLLER BEARING |
| 6 | | 947 260 4708 | | 1 | PTO BORU DİŞLİ | GEAR |
| 7 | | 017 981 1805 | | 2 | PTO BORU DİŞLİ BİLYASI | ROLLER BEARING |
| 8 | K21.04334 | 945 264 0006 | | 1 | PTO ARA ADAPTÖR MİLİ | INTERM.SHAFT |
| 9 | | 387 264 3652 | | 2 | BİLYA AYAR RAYNELİ | THRUST WASHER |
| 9 | | 387 264 3752 | | 2 | BİLYA AYAR RAYNELİ | THRUST WASHER |
| 9 | | 387 264 7152 | | 2 | BİLYA AYAR RAYNELİ | THRUST WASHER |
| 9 | | 387 264 4052 | | 2 | BİLYA AYAR RAYNELİ | THRUST WASHER |
| 10 | | 000988 022010 | | 2 | BİLYA AYAR PULU | THRUST WASHER |
| 11 | K21.04333 | 385 993 5201 | | 1 | YAY | SPRING |
| 12 | | 990 990 1700 | | 1 | BİLYA AYAR PUL SEKMANI | RETAINING RING |
| 13 | K21.04332 | 000625 000629 | | 1 | PTO MIL ŞAPKASI | PTO SHAFT CAP |
| 14 | | 990 981 0300 | | 1 | PTO BORU DİŞLİ BİLYASI | ROLLER BEARING |
| 15 | | 947 264 0921 | (947 264 0821) | 1 | PTO BORU DİŞLİ | GEAR |
| 16 | K21.04362 | | | kit | ARA ADAPTÖR MİLİ KOMPLE | INTERM.SHAFT COMP. |

P.T.O. (POWER TAKE OFF)

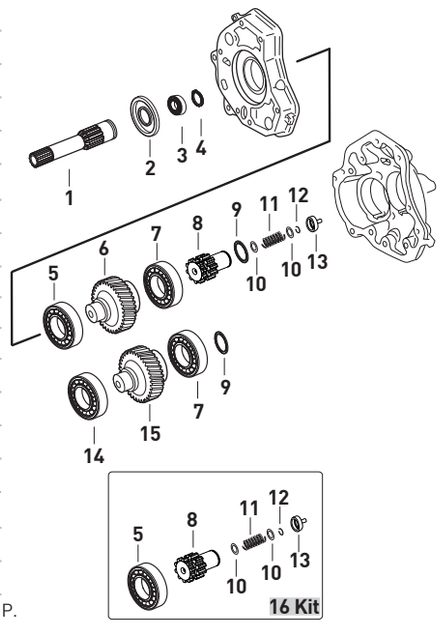









Original parts names, oem numbers, symbols and descriptions used in this catalogue are for reference purposes only.

# GEARBOX G 131- 9 / 14,57 - 1,0

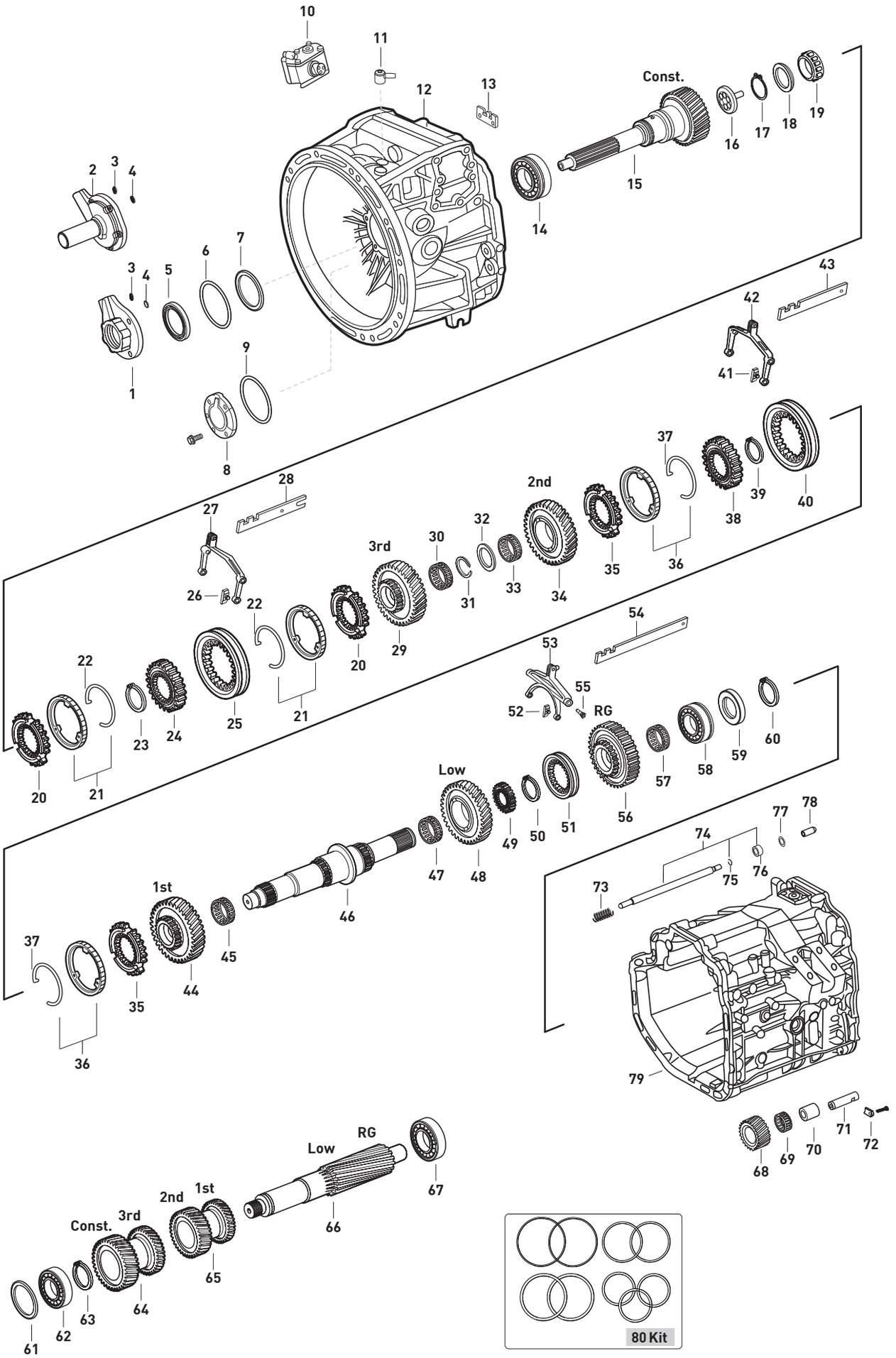




Original parts names, oem numbers, symbols and descriptions used in this catalogue are for reference purposes only.

| Fig. | Kacmaz No | Oem No | Oem Old No | Pcs. | Ürün Tanımı | Description | Sizes | Not | 715570 | 715576 | 715577 |
|---|---|---|---|---|---|---|---|---|---|---|---|
| 1 | K21.03472 | 947 261 1618 | (947 261 1018) | 1 | PRİZDİREK KEÇE KAPAĞI | COVER | | | ♦ | | |
| | | | (947 261 0918) | | | | | | | | |
| 2 | K21.03473 | 947 261 0518 | | 1 | PRİZDİREK KEÇE KAPAĞI | COVER | | | ♦ | ♦ | ♦ |
| 3 | K21.06637 | 019 997 8348 | (020 997 7948) | 1 | PRİZDİREK KEÇE KAPAK ORİNGİ | O-RING | 14X4mm | | ♦ | ♦ | ♦ |
| 4 | K21.06636 | 015 997 4048 | (020 997 8748) | 1 | PRİZDİREK KEÇE KAPAK ORİNGİ | O-RING | 5X3mm | | ♦ | ♦ | ♦ |
| 5 | K21.03509 | 019 997 0547 | (023 997 7847) | 1 | PRİZDİREK KEÇESİ | OIL SEAL | 56X72X8mm | | ♦ | ♦ | ♦ |
| | | | (019 997 0647) | | | | | | | | |
| | | | (022 997 8547) | | | | | | | | |
| 6 | | 029 997 0448 | | 1 | PRİZDİREK KEÇE KAPAK ORİNGİ | O-RING | 129X3mm | | ♦ | ♦ | ♦ |
| 7 | | 947 262 2252 | | 1 | PRİZDİREK AYAR RAYNELİ | THRUST WASHER | 1,17mm | | ♦ | ♦ | ♦ |
| 7 | K21.04279 | 947 262 2152 | | 1 | PRİZDİREK AYAR RAYNELİ | THRUST WASHER | 1,14mm | | ♦ | ♦ | ♦ |
| 7 | K21.04278 | 947 262 2052 | | 1 | PRİZDİREK AYAR RAYNELİ | THRUST WASHER | 1,11mm | | ♦ | ♦ | ♦ |
| 7 | | 947 262 1952 | | 1 | PRİZDİREK AYAR RAYNELİ | THRUST WASHER | 1,08mm | | ♦ | ♦ | ♦ |
| 7 | K21.04277 | 947 262 1852 | | 1 | PRİZDİREK AYAR RAYNELİ | THRUST WASHER | 1,05mm | | ♦ | ♦ | ♦ |
| 7 | | 947 262 1752 | | 1 | PRİZDİREK AYAR RAYNELİ | THRUST WASHER | 1,02mm | | ♦ | ♦ | ♦ |
| 7 | | 947 262 1652 | | 1 | PRİZDİREK AYAR RAYNELİ | THRUST WASHER | 0,99mm | | ♦ | ♦ | ♦ |
| 7 | K21.04276 | 947 262 1552 | | 1 | PRİZDİREK AYAR RAYNELİ | THRUST WASHER | 0,96mm | | ♦ | ♦ | ♦ |
| 7 | | 947 262 1452 | | 1 | PRİZDİREK AYAR RAYNELİ | THRUST WASHER | 0,93mm | | ♦ | ♦ | ♦ |
| 7 | K21.04275 | 947 262 1352 | | 1 | PRİZDİREK AYAR RAYNELİ | THRUST WASHER | 0,90mm | | ♦ | ♦ | ♦ |
| 7 | | 947 262 1252 | | 1 | PRİZDİREK AYAR RAYNELİ | THRUST WASHER | 0,87mm | | ♦ | ♦ | ♦ |
| 7 | | 947 262 1152 | | 1 | PRİZDİREK AYAR RAYNELİ | THRUST WASHER | 0,84mm | | ♦ | ♦ | ♦ |
| 7 | K21.04274 | 947 262 1052 | | 1 | PRİZDİREK AYAR RAYNELİ | THRUST WASHER | 0,81mm | | ♦ | ♦ | ♦ |
| 7 | | 947 262 0952 | | 1 | PRİZDİREK AYAR RAYNELİ | THRUST WASHER | 0,78mm | | ♦ | ♦ | ♦ |
| 7 | K21.04273 | 947 262 0852 | | 1 | PRİZDİREK AYAR RAYNELİ | THRUST WASHER | 0,75mm | | ♦ | ♦ | ♦ |
| 7 | | 947 262 0752 | | 1 | PRİZDİREK AYAR RAYNELİ | THRUST WASHER | 0,72mm | | ♦ | ♦ | ♦ |
| 7 | | 947 262 0652 | | 1 | PRİZDİREK AYAR RAYNELİ | THRUST WASHER | 0,69mm | | ♦ | ♦ | ♦ |
| 7 | K21.04272 | 947 262 0552 | | 1 | PRİZDİREK AYAR RAYNELİ | THRUST WASHER | 0,66mm | | ♦ | ♦ | ♦ |
| 7 | | 947 262 0452 | | 1 | PRİZDİREK AYAR RAYNELİ | THRUST WASHER | 0,63mm | | ♦ | ♦ | ♦ |
| 7 | K21.04271 | 947 262 0352 | | 1 | PRİZDİREK AYAR RAYNELİ | THRUST WASHER | 0,60mm | | ♦ | ♦ | ♦ |
| 7 | K21.04358 | | | 1 | PRİZDİREK AYAR RAYNELİ | THRUST WASHER | 0,30mm | | ♦ | ♦ | ♦ |
| 7 | K21.04357 | | | 1 | PRİZDİREK AYAR RAYNELİ | THRUST WASHER | 0,20mm | | ♦ | ♦ | ♦ |
| 7 | K21.04156 | 389 263 0152 | | 1 | PRİZDİREK AYAR RAYNELİ | THRUST WASHER | 0,10mm | | ♦ | ♦ | ♦ |
| 8 | | 976 261 1833 | (976 261 1733) | 1 | GRUP MİLİ ÖN BİLYA KAPAĞI | COVER | | | ♦ | ♦ | ♦ |
| | | | (976 261 1633) | | | | | | | | |
| 9 | K21.06533 | 028 997 2348 | (004 997 2248) | 1 | GRUP MİLİ BİLYA KAPAK ORİNGİ | O-RING | 100X3mm | | ♦ | ♦ | ♦ |
| 10 | K21.06345 | 945 260 1457 | (945 260 0057) | 1 | PİSTON VALFİ | VALVE | | | ♦ | | |
| 10 | K21.06501 | 970 260 1157 | (945 260 1957) | 1 | PİSTON VALFİ | VALVE | | | ♦ | | |
| 11 | K21.06529 | 437 261 0082 | (945 261 0082) | 1 | ŞANZIMAN HAVALANDIRMA | CAP | | | ♦ | ♦ | ♦ |
| 12 | | 947 260 2011 | | 1 | ŞANZIMAN ÖN GÖVDE | HOUSING | | | ♦ | | |
| 12 | | 947 260 4811 | | 1 | ŞANZIMAN ÖN GÖVDE | HOUSING | | | ♦ | | |
| 12 | | 947 260 1711 | | 1 | ŞANZIMAN ÖN GÖVDE | HOUSING | | | ♦ | ♦ | ♦ |
| 12 | | 947 260 9111 | | 1 | ŞANZIMAN ÖN GÖVDE | HOUSING | | | ♦ | | |
| 13 | K21.06509 | 945 267 0459 | | 1 | VİTES HİLAL ÇITA KİLİTLEMESİ | BRACKET | | | ♦ | ♦ | ♦ |
| 14 | K21.03644 | 016 981 1405 | (016 981 1105) | 1 | PRİZDİREK ÖN BİLYA | ROLLER BEARING | 75X130X27,25mm | | ♦ | ♦ | ♦ |
| | | | (016 981 0805) | | | | | | | | |
| | | | (016 981 0905) | | | | | | | | |
| | | | (016 981 1005) | | | | | | | | |
| 15 | K21.03310 | 947 262 4202 | (947 262 1302) | 1 | PRİZDİREK 28 DİŞ | INPUT SHAFT 28 T. | | | ♦ | | |
| 15 | K21.03311 | 947 262 0902 | (947 262 1102) | 1 | PRİZDİREK 28 DİŞ | INPUT SHAFT 28 T. | | | ♦ | ♦ | ♦ |
| 16 | K21.04001 | 976 269 0034 | (960 269 0434) | 1 | PRİZDİREK YAĞ PİPETİ | OIL COLLECTOR | | | ♦ | ♦ | ♦ |
| 17 | K21.04002 | 000 994 9841 | | 1 | PRİZDİREK YAĞ PİPET SEKMANI | RETAINING RING | | | ♦ | ♦ | ♦ |
| 18 | K21.04142 | 000 262 9462 | | 1 | PRİZDİREK ARKA KEÇE | OIL SEAL | 68,5X90X7,5mm | | ♦ | ♦ | ♦ |
| 19 | K21.03645 | 016 981 0505 | (016 981 1505) | 1 | KAMALI MİL UÇ BİLYA | ROLLER BEARING | 39,69X30,39mm | | ♦ | ♦ | ♦ |
| | | | (016 981 0405) | | | | | | | | |
| | | | (016 981 0605) | | | | | | | | |
| | | | (016 981 0705) | | | | | | | | |
| 20 | K21.03314 | 945 262 7834 | (945 262 5734) | 2 | PRİZ.VE 3.VİTES SENKROMENÇ | ENGAGING RING | | (A) | ♦ | ♦ | ♦ |

NOTES :
Parts encoded alphabetic and numaric are used together.

NOTLAR :
Alfabetik ve rakam ile kodlanan parçalar birlikte kullanılır.





Original parts names, oem numbers, symbols and descriptions used in this catalogue are for reference purposes only.

# GEARBOX G 131- 9 / 14,57 - 1,0

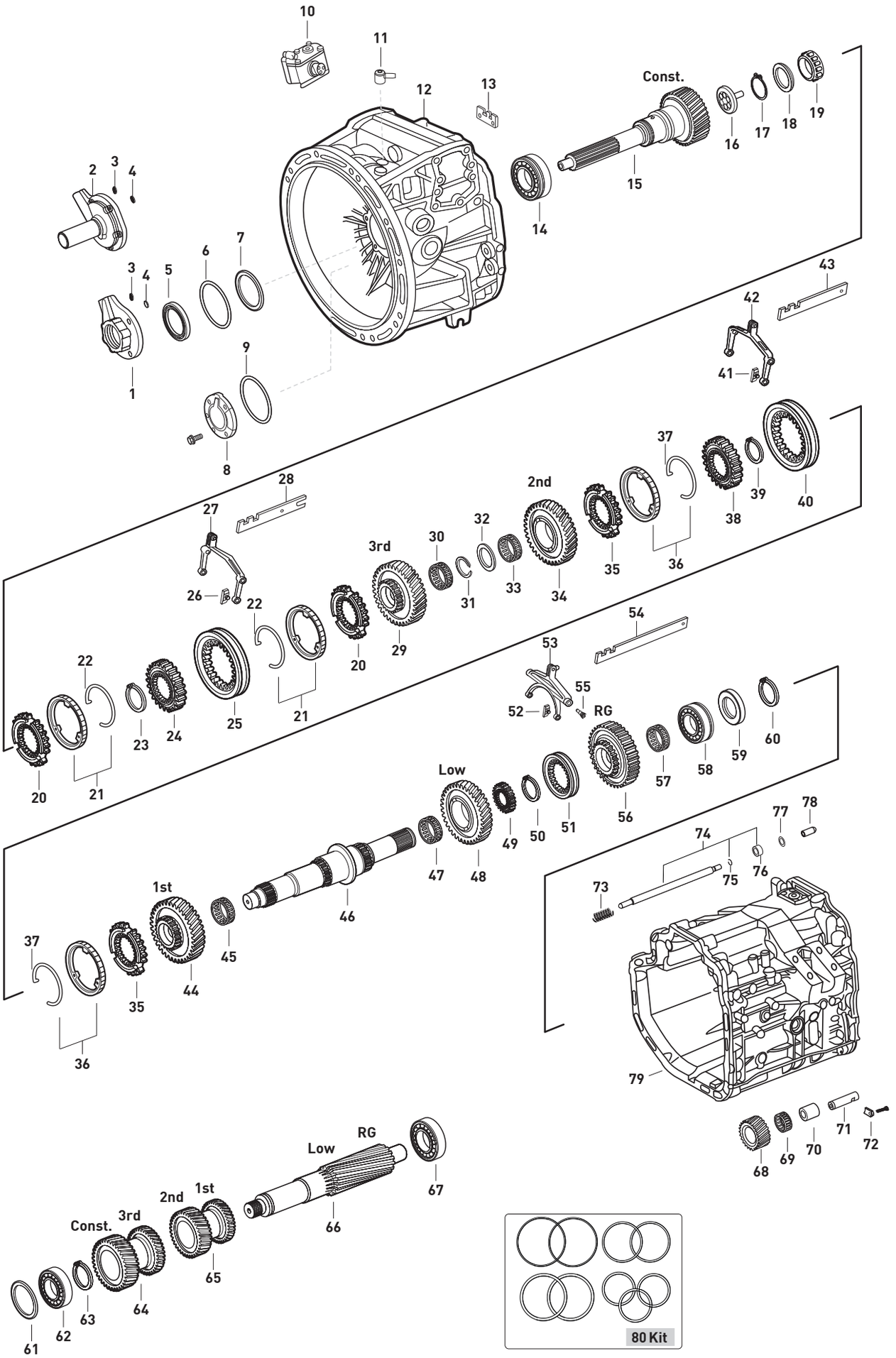




Original parts names, oem numbers, symbols and descriptions used in this catalogue are for reference purposes only.

| Fig. | Kacmaz No | Oem No | Oem Old No | Pcs. | Ürün Tanımı | Description | Sizes | Not | 715570 | 715576 | 715577 |
|---|---|---|---|---|---|---|---|---|---|---|---|
| 20 | K21.03007 | 945 262 4034 | (389 262 5334) | 2 | PRİZ.VE 3.VİTES SENKROMENÇ | ENGAGING RING | | (B) | ♦ | ♦ | ♦ |
| | | | (945 262 4434) | | | | | | | | |
| 21 | K21.03136 | 945 260 2245 | (946 262 6337) | 2 | PRİZ.VE 3.VİTES FRENLEME (Mo) | SYNCHRONIZING CONE / Mo | | (A) | ♦ | ♦ | ♦ |
| 21 | K21.03015 | 389 262 0637 | (387 262 0837) | 2 | PRİZ.VE 3.VİTES FRENLEME (Mo) | SYNCHRONIZING CONE / Mo | | (B) | ♦ | ♦ | ♦ |
| | | | (389 262 1037) | | | | | | | | |
| 22 | K21.03044 | 387 262 1093 | (387 262 0693) | 2 | FRENLEME TELİ | SPRING | | | ♦ | ♦ | ♦ |
| | | | (960 262 1393) | | | | | | | | |
| 23 | K21.04361 | 976 262 0173 | | 1 | PRİZ.VE 3.VİT.YILDIZ DİŞLİ SEKMANI | RETAINING RING | 2,00mm | | ♦ | ♦ | ♦ |
| 23 | K21.06956 | 976 262 0373 | | 1 | PRİZ./3.VİTES YILDIZ DİŞLİ SEKMANI | RETAINING RING | 2,10mm | | ♦ | ♦ | ♦ |
| 23 | K21.06957 | 976 262 0573 | | 1 | PRİZ./3.VİTES YILDIZ DİŞLİ SEKMANI | RETAINING RING | 2,20mm | | ♦ | ♦ | ♦ |
| 23 | K21.06958 | 976 262 0773 | | 1 | PRİZ./3.VİTES YILDIZ DİŞLİ SEKMANI | RETAINING RING | 2,30mm | | ♦ | ♦ | ♦ |
| 23 | K21.06959 | 976 262 3473 | | 1 | PRİZ./3.VİTES YILDIZ DİŞLİ SEKMANI | RETAINING RING | 2,40mm | | ♦ | ♦ | ♦ |
| 23 | K21.06960 | 976 262 3673 | | 1 | PRİZ./3.VİTES YILDIZ DİŞLİ SEKMANI | RETAINING RING | 2,50mm | | ♦ | ♦ | ♦ |
| 24 | K21.03316 | 947 262 0435 | | 1 | PRİZDİREK VE 3.VİTES YILDIZ DİŞLİ | SYNCHRONIZER HUB | | | ♦ | ♦ | ♦ |
| 25 | K21.03137 | 945 262 6823 | (945 262 6423) | 1 | PRİZDİREK VE 3.VİTES HALKA | ENGAGING SLEEVE | | (A) | ♦ | ♦ | ♦ |
| 25 | K21.03002 | 945 262 2823 | (945 262 0323) | 1 | PRİZDİREK VE 3.VİTES HALKA | ENGAGING SLEEVE | | (B) | ♦ | ♦ | ♦ |
| | | | (945 262 0623) | | | | | | | | |
| | | | (389 262 4123) | | | | | | | | |
| | | | (389 262 2723) | | | | | | | | |
| 26 | K21.03431 | 960 265 0049 | (947 265 0349) | 2 | PRİZDİREK VE 3.VİTES HİLAL PABUCU | SLIDING PAD | | | ♦ | ♦ | ♦ |
| | | | (389 265 2749) | | | | | | | | |
| 27 | K21.06409 | 947 260 2730 | (947 260 2530) | 1 | PRİZDİREK VE 3.VİTES HİLALİ | GEAR SHIFT FORK | | NEW | ♦ | ♦ | ♦ |
| | | | (947 265 1202) | | | | | | | | |
| 27 | K21.06407 | 947 265 0802 | | 1 | PRİZDİREK VE 3.VİTES HİLALİ | GEAR SHIFT FORK | | OLD | ♦ | ♦ | ♦ |
| 28 | | 947 265 3004 | (400 265 0704) | 1 | PRİZDİREK VE 3.VİTES HİLAL ÇITASI | SHIFTING ROD | | NEW | ♦ | ♦ | ♦ |
| 28 | | 947 265 2904 | | 1 | PRİZDİREK VE 3.VİTES HİLAL ÇITASI | SHIFTING ROD | | OLD | ♦ | ♦ | ♦ |
| 28 | | 947 265 0904 | (947 265 0804) | 1 | PRİZDİREK VE 3.VİTES HİLAL ÇITASI | SHIFTING ROD | | OLD | ♦ | ♦ | ♦ |
| 29 | K21.03317 | 947 262 0613 | (947 262 0413) | 1 | 3.VİTES DİŞLİSİ 31 DİŞ | GEAR 3rd 31 T | | | ♦ | ♦ | ♦ |
| 30 | K21.03833 | 019 981 6010 | (019 981 5810) | 1 | 3.VİTES MASURA BİLYA | NEEDLE CAGE | 60X68X54mm | | ♦ | ♦ | ♦ |
| | | | (004 981 1218) | | | | | | | | |
| 31 | K21.06915 | 389 262 3273 | | 1 | 3.VİTES MASURA BİLYA SEKMANI | RETAINING RING | 2,40mm | | ♦ | ♦ | ♦ |
| 31 | K21.06914 | 389 262 3373 | | 1 | 3.VİTES MASURA BİLYA SEKMANI | RETAINING RING | 2,45mm | | ♦ | ♦ | ♦ |
| 31 | K21.06913 | 389 262 3473 | | 1 | 3.VİTES MASURA BİLYA SEKMANI | RETAINING RING | 2,50mm | | ♦ | ♦ | ♦ |
| 31 | K21.06912 | 389 262 3573 | | 1 | 3.VİTES MASURA BİLYA SEKMANI | RETAINING RING | 2,55mm | | ♦ | ♦ | ♦ |
| 31 | K21.06911 | 389 262 3673 | | 1 | 3.VİTES MASURA BİLYA SEKMANI | RETAINING RING | 2,60mm | | ♦ | ♦ | ♦ |
| 31 | K21.06910 | 389 262 3773 | | 1 | 3.VİTES MASURA BİLYA SEKMANI | RETAINING RING | 2,65mm | | ♦ | ♦ | ♦ |
| 31 | K21.06909 | 389 262 3873 | | 1 | 3.VİTES MASURA BİLYA SEKMANI | RETAINING RING | 2,70mm | | ♦ | ♦ | ♦ |
| 31 | K21.06908 | 389 262 3973 | | 1 | 3.VİTES MASURA BİLYA SEKMANI | RETAINING RING | 2,75mm | | ♦ | ♦ | ♦ |
| 32 | K21.04143 | 389 262 1862 | | 1 | 2./3.VİTES MASURA BİLYA PULU | THRUST WASHER | | | ♦ | ♦ | ♦ |
| 33 | K21.03834 | 021 981 5210 | (021 981 6510) | 1 | 2.VİTES MASURA BİLYA | NEEDLE CAGE | 60X76X42mm | | ♦ | ♦ | ♦ |
| | | | (021 981 5110) | | | | | | | | |
| | | | (021 981 6410) | | | | | | | | |
| 34 | K21.03319 | 947 262 0612 | (947 262 0412) | 1 | 2.VİTES DİŞLİSİ 36 DİŞ | GEAR 2nd 36 T | | | ♦ | ♦ | ♦ |
| | | | (947 262 2912) | | | | | | | | |
| 35 | K21.03147 | 945 262 7734 | (945 262 3634) | 2 | 1./2.VİTES SENKROMENÇ | ENGAGING RING | | (A) | ♦ | ♦ | ♦ |
| 35 | K21.03024 | 389 262 5434 | (945 262 0334) | 2 | 1./2.VİTES SENKROMENÇ | ENGAGING RING | | (B) | ♦ | ♦ | ♦ |
| | | | (945 262 0134) | | | | | | | | |
| 36 | K21.03136 | 945 260 2245 | (946 262 6337) | 2 | 1./ 2.VİTES FRENLEME (Mo) | SYNCHRONIZING CONE / Mo | | (A) | ♦ | ♦ | ♦ |
| 36 | K21.03015 | 389 262 0637 | (387 262 0837) | 2 | 1./ 2.VİTES FRENLEME (Mo) | SYNCHRONIZING CONE / Mo | | (B) | ♦ | ♦ | ♦ |
| | | | (389 262 1037) | | | | | | | | |
| 37 | K21.03044 | 387 262 1093 | (387 262 0693) | 2 | FRENLEME TELİ | SPRING | | | ♦ | ♦ | ♦ |
| | | | (960 262 1393) | | | | | | | | |
| 38 | K21.03321 | 947 262 0135 | | 1 | 1./2.VİTES YILDIZ DİŞLİ | SYNCHRONIZER HUB | | | ♦ | ♦ | ♦ |
| 39 | K21.06930 | 387 262 7873 | | 1 | 1./2.VİTES YILDIZ DİŞLİ SEKMANI | RETAINING RING | 2,80mm | | ♦ | ♦ | ♦ |
| 39 | K21.06669 | 387 262 7673 | | 1 | 1./2.VİTES YILDIZ DİŞLİ SEKMANI | RETAINING RING | 2,70mm | | ♦ | ♦ | ♦ |
| 39 | K21.06929 | 387 262 0973 | | 1 | 1./2.VİTES YILDIZ DİŞLİ SEKMANI | RETAINING RING | 2,65mm | | ♦ | ♦ | ♦ |
| 39 | K21.04337 | 387 262 0873 | | 1 | 1./2.VİTES YILDIZ DİŞLİ SEKMANI | RETAINING RING | 2,60mm | | ♦ | ♦ | ♦ |

NOTES :
Parts encoded alphabetic and numaric are used together.

NOTLAR :
Alfabetik ve rakam ile kodlanan parçalar birlikte kullanılır.





Original parts names, oem numbers, symbols and descriptions used in this catalogue are for reference purposes only.

# GEARBOX G 131- 9 / 14,57 - 1,0

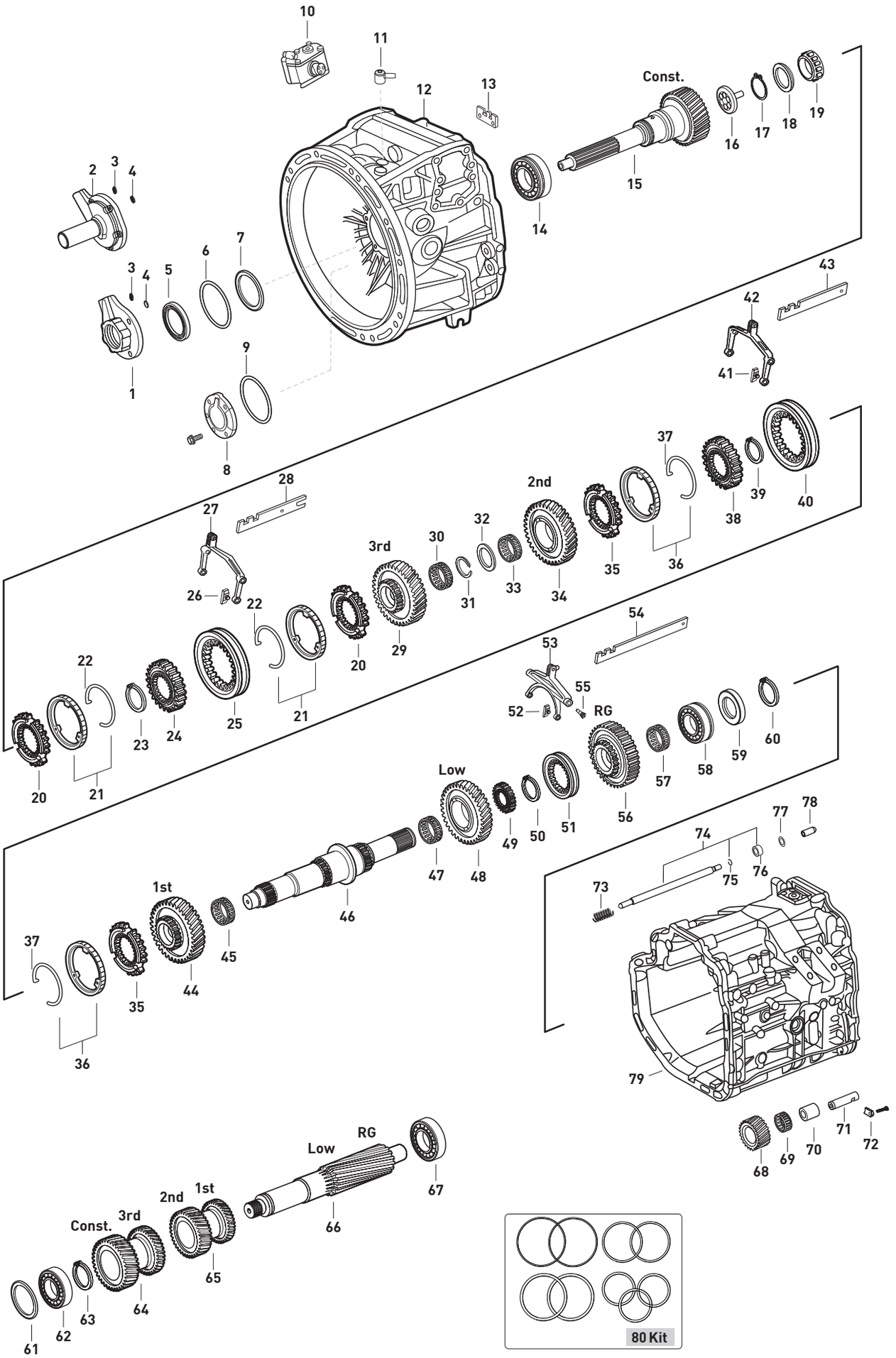




Original parts names, oem numbers, symbols and descriptions used in this catalogue are for reference purposes only.

| Fig. | Kacmaz No | Oem No | Oem Old No | Pcs. | Ürün Tanımı | Description | Sizes | Not | 715570 | 715576 | 715577 |
|---|---|---|---|---|---|---|---|---|---|---|---|
| 39 | K21.07019 | 387 262 0773 | | 1 | 1./2.VİTES YILDIZ DİŞLİ SEKMANI | RETAINING RING | 2,55mm | | ♦ | ♦ | ♦ |
| 39 | K21.04352 | 387 262 0673 | | 1 | 1./2.VİTES YILDIZ DİŞLİ SEKMANI | RETAINING RING | 2,50mm | | ♦ | ♦ | ♦ |
| 39 | K21.07018 | 387 262 0573 | | 1 | 1./2.VİTES YILDIZ DİŞLİ SEKMANI | RETAINING RING | 2,45mm | | ♦ | ♦ | ♦ |
| 39 | K21.04336 | 387 262 0473 | | 1 | 1./2.VİTES YILDIZ DİŞLİ SEKMANI | RETAINING RING | 2,40mm | | ♦ | ♦ | ♦ |
| 40 | K21.03137 | 945 262 6823 | (945 262 6423) | 1 | 1./ 2.VİTES HALKA | ENGAGING SLEEVE | | (A) | ♦ | ♦ | ♦ |
| 40 | K21.03002 | 945 262 2823 | (945 262 0323) | 1 | 1./2.VİTES HALKA | ENGAGING SLEEVE | | (B) | ♦ | ♦ | ♦ |
| | | | (945 262 0623) | | | | | | | | |
| | | | (389 262 4123) | | | | | | | | |
| | | | (389 262 2723) | | | | | | | | |
| 41 | K21.03431 | 960 265 0049 | (947 265 0349) | 2 | PRİZ.VE 3.VİTES HİLAL PABUCU | SLIDING PAD | | | ♦ | ♦ | ♦ |
| | | | (389 265 2749) | | | | | | | | |
| 42 | K21.06408 | 947 260 2230 | (947 265 2301) | 1 | 1./2.VİTES HİLALİ | SHIFTING FORK 1st/2nd | | NEW | ♦ | ♦ | ♦ |
| 42 | K21.06427 | 947 265 0601 | | 1 | 1./2.VİTES HİLALİ | SHIFTING FORK 1st/2nd | | OLD | ♦ | ♦ | ♦ |
| 43 | | 947 265 1504 | | 1 | 1./2.VİTES HİLAL ÇITASI | SHIFTING ROD 1st/2nd | | NEW | ♦ | ♦ | ♦ |
| 43 | | 947 265 1204 | | 1 | 1./2.VİTES HİLAL ÇITASI | SHIFTING ROD 1st/2nd | | OLD | ♦ | ♦ | ♦ |
| 44 | K21.03322 | 947 262 1911 | (947 262 1611) | 1 | 1.VİTES DİŞLİSİ 40 DİŞ | GEAR 1st 40 T. | | | ♦ | ♦ | ♦ |
| 45 | K21.03817 | 019 981 4410 | (007 981 4210) | 1 | 2.VİTES MASURA BİLYA | NEEDLE CAGE | 75X83X55mm | | ♦ | ♦ | ♦ |
| | | | (008 981 8310) | | | | | | | | |
| | | | (009 981 0010) | | | | | | | | |
| 46 | K21.03324 | 947 262 0305 | | 1 | KAMALI MİL | MAIN SHAFT | | | ♦ | ♦ | ♦ |
| 47 | K21.03827 | 013 981 1210 | (006 981 6410) | 1 | C.VİTES MASURA BİLYA | NEEDLE CAGE | 75X83X33mm | | ♦ | ♦ | ♦ |
| | | | (015 981 0210) | | | | | | | | |
| | | | (021 981 5710) | | | | | | | | |
| 48 | K21.03325 | 947 262 1811 | (947 262 2411) | 1 | C VİTES DİŞLİSİ 41 DİŞ | GEAR CRAWLING GEAR 41 T. | | | ♦ | ♦ | ♦ |
| | | | (947 262 1311) | | | | | | | | |
| 49 | K21.03328 | 947 262 0735 | (947 262 0835) | 1 | GERİ VİTES YILDIZ DİŞLİ | SYNCHRONIZER HUB | | | ♦ | ♦ | ♦ |
| 50 | K21.06930 | 387 262 7873 | | 1 | R./C.VİTES YILDIZ DİŞLİ SEKMANI | RETAINING RING | 2,80mm | | ♦ | ♦ | ♦ |
| 50 | K21.06669 | 387 262 7673 | | 1 | R./C.VİTES YILDIZ DİŞLİ SEKMANI | RETAINING RING | 2,70mm | | ♦ | ♦ | ♦ |
| 50 | K21.06929 | 387 262 0973 | | 1 | R./C.VİTES YILDIZ DİŞLİ SEKMANI | RETAINING RING | 2,65mm | | ♦ | ♦ | ♦ |
| 50 | K21.04337 | 387 262 0873 | | 1 | R./C.VİTES YILDIZ DİŞLİ SEKMANI | RETAINING RING | 2,60mm | | ♦ | ♦ | ♦ |
| 50 | K21.07019 | 387 262 0773 | | 1 | R./C.VİTES YILDIZ DİŞLİ SEKMANI | RETAINING RING | 2,55mm | | ♦ | ♦ | ♦ |
| 50 | K21.04352 | 387 262 0673 | | 1 | R./C.VİTES YILDIZ DİŞLİ SEKMANI | RETAINING RING | 2,50mm | | ♦ | ♦ | ♦ |
| 50 | K21.07018 | 387 262 0573 | | 1 | R./C.VİTES YILDIZ DİŞLİ SEKMANI | RETAINING RING | 2,45mm | | ♦ | ♦ | ♦ |
| 50 | K21.04336 | 387 262 0473 | | 1 | R./C.VİTES YILDIZ DİŞLİ SEKMANI | RETAINING RING | 2,40mm | | ♦ | ♦ | ♦ |
| 51 | K21.03330 | 945 262 2023 | | 1 | GERİ VİTES HALKASI | ENGAGING SLEEVE | | | ♦ | ♦ | ♦ |
| 52 | K21.03474 | 947 265 0649 | (947 265 0149) | 2 | GERİ VİTES HİLAL PABUCU | SLIDING PAD | | | ♦ | ♦ | ♦ |
| 53 | K21.06532 | 947 260 2030 | | 1 | GERİ VİTES HİLALİ | SHIFTING FORK | | | ♦ | ♦ | ♦ |
| 54 | | 947 265 1904 | | 1 | GERİ VİTES HİLAL ÇITASI | SHIFTING ROD | | | ♦ | ♦ | ♦ |
| 54 | | 947 265 2004 | (947 265 1804) | 1 | GERİ VİTES HİLAL ÇITASI | SHIFTING ROD | | | ♦ | ♦ | ♦ |
| 55 | K21.04307 | 960 265 0774 | (945 265 1274) | 2 | HİLAL CİVATASI | PIN | | | ♦ | ♦ | ♦ |
| | | | (945 265 2974) | | | | | | | | |
| | | | (945 265 2774) | | | | | | | | |
| 56 | K21.03331 | 947 262 0633 | (947 262 1133) | 1 | GERİ VİTES DİŞLİSİ 39 DİŞ | REVERSE GEAR 39 T. | | | ♦ | ♦ | ♦ |
| | | | (947 262 0433) | | | | | | | | |
| 57 | K21.03835 | 012 981 5410 | (021 981 6310) | 1 | GERİ VİTES MASURA BİLYA | NEEDLE CAGE | 65X73X30mm | | ♦ | ♦ | ♦ |
| | | | (004 981 1318) | | | | | | | | |
| 58 | K21.03653 | 016 981 0105 | (016 981 0005) | 1 | KAMALI MİL ARKA BİLYA | ROLLER BEARING | 55X130X27,25mm | | ♦ | ♦ | ♦ |
| | | | (016 981 0205) | | | | | | | | |
| | | | (016 981 0305) | | | | | | | | |
| | | | (016 981 1605) | | | | | | | | |
| 59 | K21.04133 | 947 262 0152 | | 1 | GÜNEŞ DİŞLİ PULU | THRUST WASHER | | | ♦ | ♦ | ♦ |
| 60 | K21.04354 | 000471 050000 | | 1 | KAMALI MİL ARKA BİLYA SEKMANI | RETAINING RING | 50X2mm | | ♦ | ♦ | ♦ |
| 61 | K21.04192 | 406 337 0252 | | 1 | GRUP MİLİ ÖN BİLYA RAYNELİ | THRUST WASHER | 0,10mm | | ♦ | ♦ | ♦ |
| 61 | K21.04150 | 406 337 0352 | | 1 | GRUP MİLİ ÖN BİLYA RAYNELİ | THRUST WASHER | 0,20mm | | ♦ | ♦ | ♦ |
| 61 | K21.94150 | | | 1 | GRUP MİLİ ÖN BİLYA RAYNELİ | THRUST WASHER | 0,25mm | | ♦ | ♦ | ♦ |
| 61 | K21.04338 | 406 337 0452 | | 1 | GRUP MİLİ ÖN BİLYA RAYNELİ | THRUST WASHER | 0,30mm | | ♦ | ♦ | ♦ |
| 61 | K21.04196 | 389 263 5352 | (389 263 3252) | 1 | GRUP MİLİ ÖN BİLYA RAYNELİ | THRUST WASHER | 0,40mm | | ♦ | ♦ | ♦ |

NOTES :
Parts encoded alphabetic and numaric are used together.

NOTLAR :
Alfabetik ve rakam ile kodlanan parçalar birlikte kullanılır.





Original parts names, oem numbers, symbols and descriptions used in this catalogue are for reference purposes only.

# GEARBOX G 131- 9 / 14,57 - 1,0

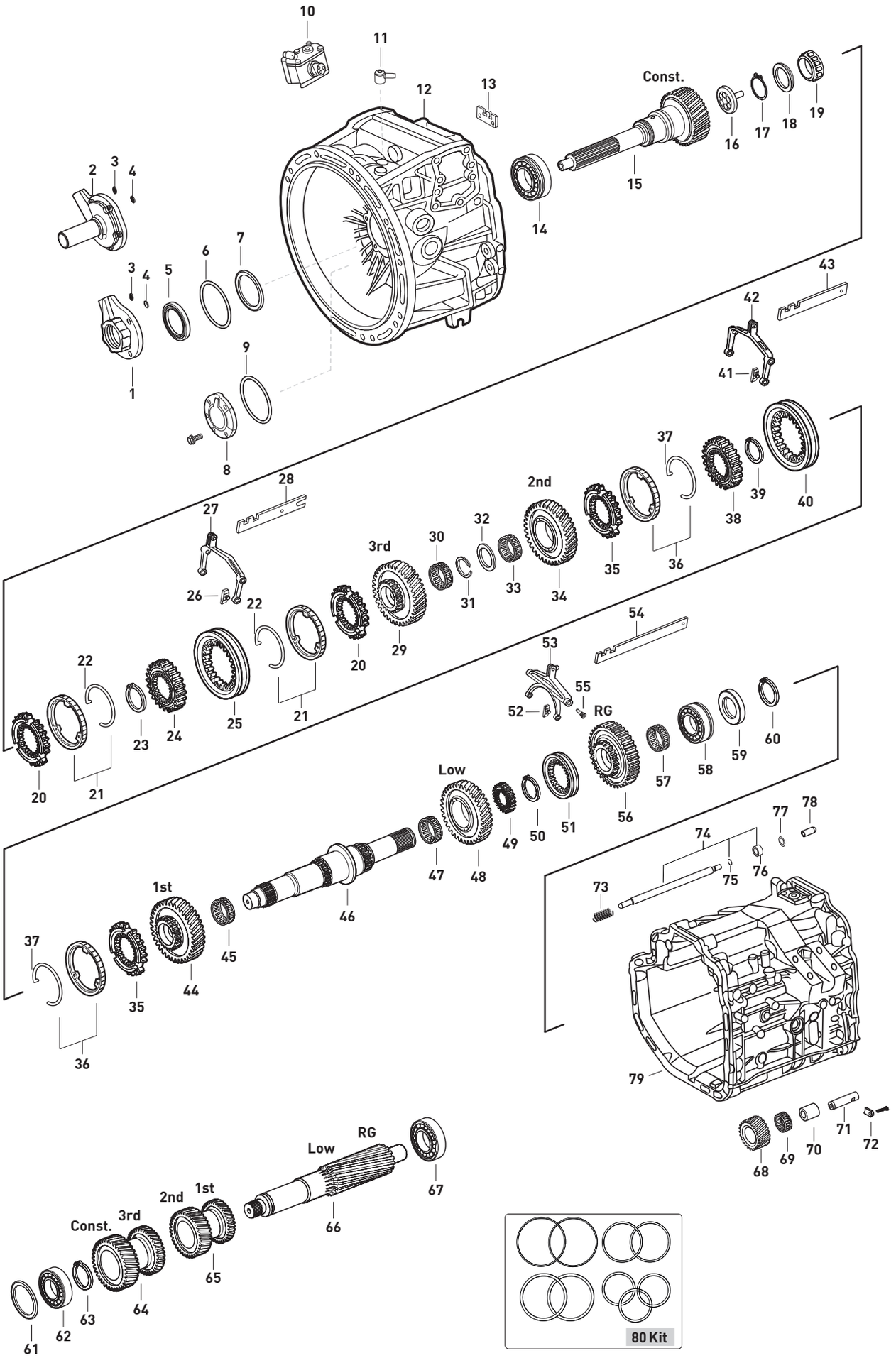




Original parts names, oem numbers, symbols and descriptions used in this catalogue are for reference purposes only.

| Fig. | Kacmaz No | Oem No | Oem Old No | Pcs. | Ürün Tanımı | Description | Sizes | Not | 715570 | 715576 | 715577 |
|---|---|---|---|---|---|---|---|---|---|---|---|
| 61 | K21.04194 | 389 263 3352 | | 1 | GRUP MİLİ ÖN BİLYA RAYNELİ | THRUST WASHER | 0,45mm | | ♦ | ♦ | ♦ |
| 61 | K21.06719 | 389 263 5652 | | 1 | GRUP MİLİ ÖN BİLYA RAYNELİ | THRUST WASHER | 0,49mm | | ♦ | ♦ | ♦ |
| 61 | K21.04197 | 389 263 5852 | (389 263 3552) | 1 | GRUP MİLİ ÖN BİLYA RAYNELİ | THRUST WASHER | 0,55mm | | ♦ | ♦ | ♦ |
| 61 | K21.04340 | 389 263 6052 | | 1 | GRUP MİLİ ÖN BİLYA RAYNELİ | THRUST WASHER | 0,61mm | | ♦ | ♦ | ♦ |
| 61 | K21.04198 | 389 263 6352 | (389 263 3852) | 1 | GRUP MİLİ ÖN BİLYA RAYNELİ | THRUST WASHER | 0,70mm | | ♦ | ♦ | ♦ |
| 61 | K21.04154 | 389 263 3952 | | 1 | GRUP MİLİ ÖN BİLYA RAYNELİ | THRUST WASHER | 0,75mm | | ♦ | ♦ | ♦ |
| 61 | K21.04199 | 389 263 6852 | | 1 | GRUP MİLİ ÖN BİLYA RAYNELİ | THRUST WASHER | 0,85mm | | ♦ | ♦ | ♦ |
| 61 | K21.04200 | 389 263 7352 | | 1 | GRUP MİLİ ÖN BİLYA RAYNELİ | THRUST WASHER | 1,00mm | | ♦ | ♦ | ♦ |
| 61 | K21.04201 | 389 263 7852 | | 1 | GRUP MİLİ ÖN BİLYA RAYNELİ | THRUST WASHER | 1,15mm | | ♦ | ♦ | ♦ |
| 61 | K21.04202 | 389 263 8352 | | 1 | GRUP MİLİ ÖN BİLYA RAYNELİ | THRUST WASHER | 1,30mm | | ♦ | ♦ | ♦ |
| 62 | K21.03606 | 015 981 9005 | (014 981 1405) | 1 | GRUP MİLİ ÖN BİLYA | ROLLER BEARING | 50,8X100X35mm | | ♦ | ♦ | ♦ |
| | | | (012 981 7405) | | | | | | | | |
| | | | (012 981 5105) | | | | | | | | |
| 63 | K21.04355 | 000471 058000 | | 1 | GRUP MİLİ ÖN BİLYA SEKMANI | RETAINING RING | | | ♦ | ♦ | ♦ |
| 64 | K21.03336 | 947 263 0513 | (947 263 0413) | 1 | PRİZ.VE 3.VİT.DİŞ.KARŞILIĞI 32/38 DİŞ | DOUBLE GEAR Const./3rd 32/38 T. | | | ♦ | ♦ | ♦ |
| 65 | K21.06248 | 947 263 0111 | | 1 | 1./2.VİT.DİŞ.KARŞILIĞI 21/27 DİŞ | DOUBLE GEAR 1st/2nd 21/27 T. | | | ♦ | ♦ | ♦ |
| 66 | K21.03339 | 947 263 0702 | | 1 | GRUP MİLİ 14 DİŞ | COUNTER SHAFT 14 T. | | | ♦ | ♦ | ♦ |
| 67 | K21.03647 | 015 981 9705 | (015 981 9605) | 1 | GRUP MİLİ ARKA BİLYA | ROLLER BEARING | 60X110X29,75mm | | ♦ | ♦ | ♦ |
| 68 | K21.06997 | 947 263 1931 | (947 263 2031) | 1 | KÜÇÜK GERİ VİTES DİŞLİSİ 18 DİŞ | REVERSE IDLER GEAR 18 T. | | (1) | ♦ | ♦ | ♦ |
| 68 | K21.06068 | 947 263 0731 | | 1 | KÜÇÜK GERİ VİTES DİŞLİSİ 18 DİŞ | REVERSE IDLER GEAR 18 T. | | (2) | ♦ | ♦ | ♦ |
| 69 | | 023 981 3110 | (003 981 2818) | 1 | KÜÇÜK GERİ VİTES MASURA BİLYA | NEEDLE CAGE | 40X50X42mm | (1) | ♦ | ♦ | ♦ |
| | | | (004 981 1518) | | | | | | | | |
| 69 | K21.03843 | 021 981 5610 | (021 981 2010) | 1 | KÜÇÜK GERİ VİTES MASURA BİLYA | NEEDLE CAGE | 42X50X40mm | (2) | ♦ | ♦ | ♦ |
| 70 | K21.06495 | 947 992 0103 | | 1 | KÜÇÜK GERİ VİTES MAS.BİLYA ÇANAĞI | BUSHING | | (1) | ♦ | ♦ | ♦ |
| 70 | K21.06069 | 947 263 0050 | | 1 | KÜÇÜK GERİ VİTES MAS.BİLYA ÇANAĞI | BUSHING | | (2) | ♦ | ♦ | ♦ |
| 71 | K21.06037 | 976 263 0030 | (976 263 1230) | 1 | KÜÇÜK GERİ VİTES PİMİ | PIN | | | ♦ | ♦ | ♦ |
| 72 | K21.07010 | 945 263 0041 | | 1 | KÜÇÜK GERİ VİTES PİM KİLİTLEMESİ | KEY | | | ♦ | ♦ | ♦ |
| 73 | | 389 993 0501 | | 1 | KİLİTLEME MİL YAYI | SPRING | | | ♦ | ♦ | ♦ |
| 74 | K21.06067 | 947 268 0225 | (947 268 0525) | 1 | KİLİTLEME MİLİ | SHIFTING ROD | | | ♦ | ♦ | ♦ |
| 75 | | 007993 012200 | | 1 | KİLİTLEME MİL SEKMANI | RETAINING RING | | | ♦ | ♦ | ♦ |
| 76 | | 389 268 0051 | | 1 | KİLİTLEME MİL BURCU | SPACER RING | | | ♦ | ♦ | ♦ |
| 77 | | 000998 006019 | | 1 | KİLİTLEME MİLİ AYAR RAYNELİ | FITTED WASHER | 0,10mm | | ♦ | ♦ | ♦ |
| 77 | | 000998 006020 | | 1 | KİLİTLEME MİLİ AYAR RAYNELİ | FITTED WASHER | 0,20mm | | ♦ | ♦ | ♦ |
| 77 | | 000988 006021 | | 1 | KİLİTLEME MİLİ AYAR RAYNELİ | FITTED WASHER | 0,30mm | | ♦ | ♦ | ♦ |
| 77 | | 000988 006013 | | 1 | KİLİTLEME MİLİ AYAR RAYNELİ | FITTED WASHER | 0,50mm | | ♦ | ♦ | ♦ |
| 77 | | 000988 006001 | | 1 | KİLİTLEME MİLİ AYAR RAYNELİ | FITTED WASHER | 1,00mm | | ♦ | ♦ | ♦ |
| 78 | K21.03489 | 389 268 0674 | | 1 | KİLİTLEME MİL FİŞEĞİ | PIN | | | ♦ | ♦ | ♦ |
| 79 | | 947 261 0226 | | 1 | ŞANZIMAN ORTA GÖVDE | HOUSING | | (1) | ♦ | ♦ | ♦ |
| 79 | | 947 261 2003 | | 1 | ŞANZIMAN ORTA GÖVDE | HOUSING | | (2) | ♦ | ♦ | ♦ |
| 80 | K21.06996 | | | Kit | RAYNEL TAKIMI | WASHER KIT | | | ♦ | ♦ | ♦ |

NOTES :
Parts encoded alphabetic and numaric are used together.

NOTLAR :
Alfabetik ve rakam ile kodlanan parçalar birlikte kullanılır.





Original parts names, oem numbers, symbols and descriptions used in this catalogue are for reference purposes only.

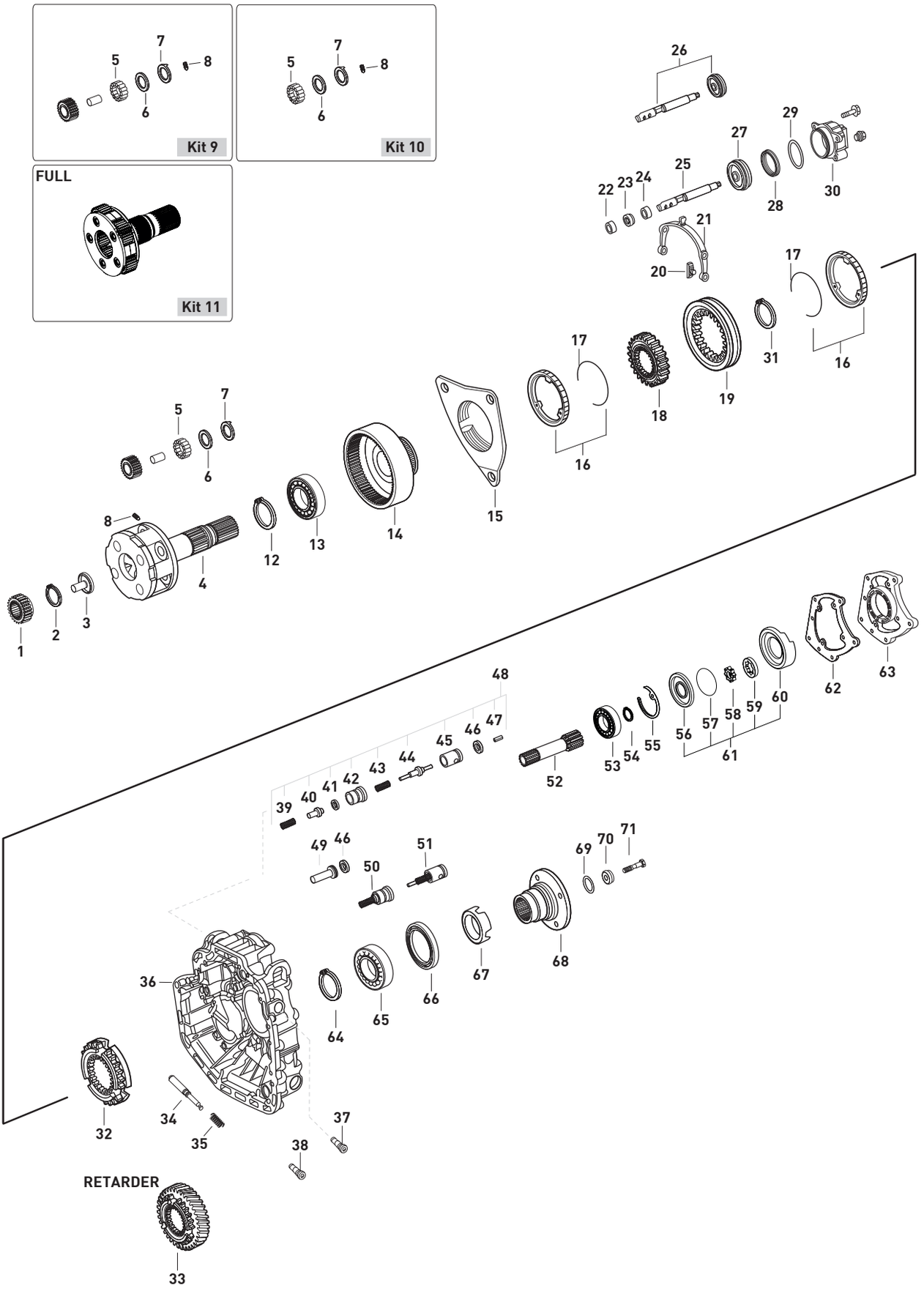






Original parts names, oem numbers, symbols and descriptions used in this catalogue are for reference purposes only.

| Fig. | Kacmaz No | Oem No | Oem Old No | Pcs. | Ürün Tanımı | Description | Sizes | Not | 715570 | 715576 | 715577 |
|---|---|---|---|---|---|---|---|---|---|---|---|
| 1 | K21.03334 | 947 262 0709 | (947 262 0809) | 1 | GÜNEŞ DİŞLİSİ 30 DİŞ | SUN GEAR 30 T. | | | ♦ | ♦ | ♦ |
| 2 | K21.04115 | 000472 060000 | | 1 | HEYKEL YAĞ PİPET SEKMANI | SNAP RING | 2,00mm | | ♦ | ♦ | ♦ |
| 3 | K21.03435 | 945 269 0834 | (389 269 4734) | 1 | ŞANZIMAN HEYKELİ YAĞ PİPETİ | OIL TUBE | | | ♦ | ♦ | ♦ |
| 4 | K21.03341 | 947 260 9361 | (947 260 1961) | 1 | ŞANZIMAN HEYKELİ (BOŞ) | PLANETARY CARRIER (EMPTY) | | | ♦ | ♦ | ♦ |
| | | | (947 260 4561) | | | | | | | | |
| 5 | K21.03844 | 000 981 6186 | (000 981 5886) | 100 | HEYKEL KOZA DİŞLİ TANE BİLYA | NEEDLE ROLLER | D5X32,7 | | | | ♦ |
| 6 | K21.04074 | 389 262 0162 | (389 262 6462) | 8 | HEYKEL KOZA DİŞLİ PULU | THRUST WASHER | | | ♦ | ♦ | ♦ |
| | | | (389 262 0562) | | | | | | | | |
| 7 | K21.04280 | 947 262 0262 | (947 262 0362) | 8 | HEYKEL KOZA DİŞLİ PULU | THRUST WASHER | | | ♦ | ♦ | ♦ |
| 8 | K21.03418 | 000914 006109 | | 4 | HEYKEL KOZA DİŞLİ VİDASI | THREADED PIN | M6X14 | | ♦ | ♦ | ♦ |
| 9 | K21.03340 | 947 260 0097 | | Kit | HEYKEL KOZA DİŞLİ TAKIMI | PLANETARY GEAR SET | | | ♦ | ♦ | ♦ |
| 10 | K21.06344 | | | Kit | HEYKEL BİLYA VE PUL TAKIMI | WASHER KIT | | | ♦ | ♦ | ♦ |
| 11 | K21.03685 | | | Kit | ŞANZIMAN HEYKELİ (DOLU) | PLANETARY CARRIER (FULL) | | | ♦ | ♦ | ♦ |
| 12 | K21.04353 | 000472 110000 | | 1 | ÇEMBER DİŞLİ BİLYA SEKMANI | RETAINING RING | 110X4mm | | ♦ | ♦ | ♦ |
| 13 | K21.03649 | 008 981 9525 | (008 981 9925) | 1 | ÇEMBER DİŞLİ BİLYASI | ROLLER BEARING | 70X110X20mm | | ♦ | ♦ | ♦ |
| | | | (008 981 9625) | | | | | | | | |
| | | | (008 981 9725) | | | | | | | | |
| | | | (008 981 9825) | | | | | | | | |
| | | | (010 981 4501) | | | | | | | | |
| 14 | K21.03479 | 947 262 1208 | (947 262 1308) | 1 | PLANET ÇEMBER DİŞLİ 80 DİŞ | CROWN GEAR 80 T. | | | ♦ | ♦ | ♦ |
| | | | (947 262 1108) | | | | | | | | |
| | | | (400 262 0108) | | | | | | | | |
| 15 | K21.03305 | 947 260 0736 | | 1 | TABLA SENKROMENÇ | FOLLOWER RING | | (A) | ♦ | ♦ | ♦ |
| 15 | K21.03343 | 947 260 0536 | | 1 | TABLA SENKROMENÇ | FOLLOWER RING | | (B) | ♦ | ♦ | |
| 16 | K21.03185 | 947 260 0945 | | 2 | AĞIR SERİ FRENLEME (Mo) | SYNCHRONIZING CONE / Mo | | (A) | ♦ | ♦ | ♦ |
| 16 | K21.06273 | 947 260 3045 | | 2 | AĞIR SERİ FRENLEME (C) | SYNCHRONIZING CONE / C | | (A) | ♦ | ♦ | ♦ |
| 16 | K21.03017 | 389 262 0537 | (389 262 0037) | 2 | AĞIR SERİ FRENLEME (Mo) | SYNCHRONIZING CONE / Mo | | (B) | ♦ | ♦ | |
| | | | (389 262 0137) | | | | | | | | |
| | | | (389 262 3337) | | | | | | | | |
| 16 | K21.03078 | 945 260 0850 | | 2 | AĞIR SERİ FRENLEME (C) | SYNCHRONIZING CONE / C | | (B) | ♦ | ♦ | |
| 17 | K21.03077 | 389 262 0293 | | 2 | FRENLEME TELİ | SPRING | | | ♦ | ♦ | ♦ |
| 18 | K21.03079 | 389 262 4935 | (389 262 2035) | 1 | AĞIR SERİ YILDIZ DİŞLİ 73 DİŞ | SYNCHRONIZER HUB 73 T. | | | ♦ | ♦ | ♦ |
| | | | (400 262 0335) | | | | | | | | |
| 19 | K21.03033 | 945 262 6923 | (930 262 0623) | 1 | AĞIR SERİ HALKA | ENGAGING SLEEVE | | (A) | ♦ | ♦ | ♦ |
| 19 | K21.03028 | 945 262 6623 | (945 262 0823) | 1 | AĞIR SERİ HALKA 73 DİŞ | ENGAGING SLEEVE 73 T. | | (B) | ♦ | ♦ | |
| | | | (389 262 1623) | | | | | | | | |
| | | | (389 262 3823) | | | | | | | | |
| | | | (945 262 2623) | | | | | | | | |
| 20 | K21.03431 | 960 265 0049 | (947 265 0349) | 2 | AĞIR SERİ HİLAL PABUCU | SLIDING PAD | | (A) | ♦ | ♦ | ♦ |
| | | | (389 265 2749) | | | | | | | | |
| 20 | K21.03406 | 389 265 2449 | (389 265 1249) | 2 | AĞIR SERİ HİLAL PABUCU | SLIDING PAD | | (B) | ♦ | ♦ | |
| | | | (945 265 0949) | | | | | | | | |
| | | | (945 265 0349) | | | | | | | | |
| 21 | K21.06324 | 947 265 1901 | (947 265 0901) | 1 | AĞIR SERİ HİLALİ | SHIFTING FORK | | (A) | ♦ | ♦ | ♦ |
| 21 | K21.06411 | 947 265 1701 | (389 265 0901) | 1 | AĞIR SERİ HİLALİ | SHIFTING FORK | | (B) | ♦ | ♦ | |
| | | | (930 265 0001) | | | | | | | | |
| | | | (947 265 0801) | | | | | | | | |
| 22 | K21.04254 | 000 992 7703 | (389 267 2250) | 1 | AĞIR SERİ HİLAL MİL BURCU | BUSHING | 21X25X20mm | | ♦ | ♦ | ♦ |
| 23 | K21.03523 | 000 267 0197 | (000 267 0397) | 1 | AĞIR SERİ HİLAL MİL KEÇESİ | OIL SEAL | 22X32X8mm | | ♦ | ♦ | ♦ |
| 24 | K21.04178 | 387 267 0650 | (387 267 0250) | 1 | AĞIR SERİ HİLAL MİL BURCU | BUSHING | 34x22x8mm | | ♦ | ♦ | ♦ |
| 25 | | 389 267 7317 | (945 267 2117) | 1 | AĞIR SERİ HİLAL MİLİ | SHIFTING ROD | | (1) | ♦ | ♦ | ♦ |
| 25 | | 389 267 3517 | | 1 | AĞIR SERİ HİLAL MİLİ | SHIFTING ROD | | (2) | ♦ | ♦ | |
| 26 | | 930 260 2789 | | 1 | AĞIR SERİ HİLAL MİLİ KOMPLE | SHIFTING ROD COMPLETE | | (1) | ♦ | ♦ | ♦ |

NOTES :
Parts encoded alphabetic and numaric are used together.

NOTLAR :
Alfabetik ve rakam ile kodlanan parçalar birlikte kullanılır.





Original parts names, oem numbers, symbols and descriptions used in this catalogue are for reference purposes only.

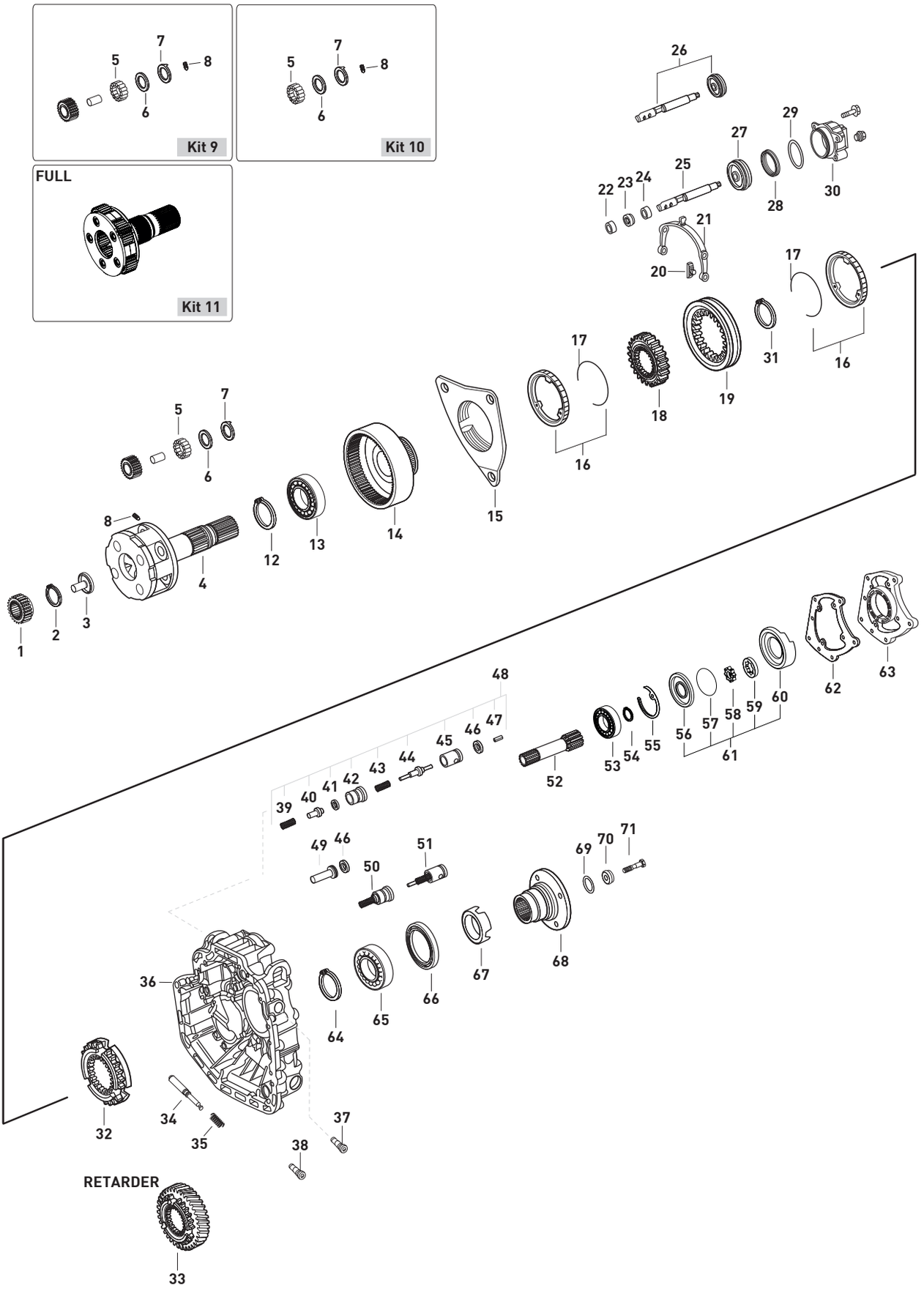






Original parts names, oem numbers, symbols and descriptions used in this catalogue are for reference purposes only.

| Fig. | Kacmaz No | Oem No | Oem Old No | Pcs. | Ürün Tanımı | Description | Sizes | Not | 715570 | 715576 | 715577 |
|---|---|---|---|---|---|---|---|---|---|---|---|
| 26 | | 930 260 2589 | | 1 | AĞIR SERİ HİLAL MİLİ KOMPLE | SHIFTING ROD COMPLETE | | (2) | ♦ | ♦ | |
| 27 | K21.06975 | 960 267 0818 | (389 267 1018) | 1 | AĞIR SERİ HİLAL MİL PİSTONU | PISTON | | | ♦ | ♦ | ♦ |
| | | | (389 267 0118) | | | | | | | | |
| 28 | K21.03525 | 024 997 8347 | (020 997 6747) | 1 | AĞIR SERİ SİLİNDİR KEÇESİ | SEAL RING | 77X90X17mm | | ♦ | ♦ | ♦ |
| | | | (014 997 3647) | | | | | | | | |
| | | | (014 997 5147) | | | | | | | | |
| 29 | K21.06399 | 013 997 7548 | | 1 | AĞIR SERİ SİLİNDİR ORİNGİ | O-RING | 89,5X3mm | | ♦ | ♦ | ♦ |
| 30 | K21.03540 | 945 267 1119 | (389 267 1319) | 1 | AĞIR SERİ SİLİNDİRİ | SHIFTING CYLINDER | | | ♦ | ♦ | ♦ |
| | | | (389 267 4219) | | | | | | | | |
| | | | (945 267 1319) | | | | | | | | |
| | | | (945 267 1619) | | | | | | | | |
| 31 | K21.04356 | 000471 120000 | | 1 | AĞIR SERİ YILDIZ DİŞLİ SEKMANI | RETAINING RING | | | ♦ | ♦ | ♦ |
| 32 | K21.03038 | 947 262 0334 | | 1 | SERİ SENKROMENÇ | ENGAGING RING | | (A) | ♦ | ♦ | ♦ |
| 32 | | 947 262 0134 | | 1 | SERİ SENKROMENÇ | ENGAGING RING | | (B) | ♦ | ♦ | |
| 33 | | 947 264 0020 | | 1 | RETARDER DİŞLİSİ | RETARDER GEAR | | | ♦ | ♦ | |
| 34 | K21.03486 | 389 267 0974 | | 1 | AĞIR SERİ KİLİTLEME MİLİ | PIN | | | ♦ | ♦ | ♦ |
| 35 | K21.06006 | 389 993 3401 | (389 993 0601) | 1 | AĞIR SERİ KİLİTLEME YAYI | SPRING | | | ♦ | ♦ | ♦ |
| 36 | | 947 260 9311 | | 1 | ŞANZIMAN ARKA GÖVDE | HOUSING | | | ♦ | | |
| 36 | | 947 260 3811 | | 1 | ŞANZIMAN ARKA GÖVDE | HOUSING | | | ♦ | ♦ | |
| 36 | | 947 260 7611 | | 1 | ŞANZIMAN ARKA GÖVDE | HOUSING | | | ♦ | ♦ | ♦ |
| 37 | K21.04307 | 960 265 0774 | (945 265 1274) | 2 | HİLAL CİVATASI | PIN | | (A) | ♦ | ♦ | ♦ |
| | | | (945 265 2974) | | | | | | | | |
| | | | (945 265 2774) | | | | | | | | |
| 38 | K21.06026 | 945 265 3074 | (945 265 1474) | 2 | HİLAL CİVATASI | PIN | | (B) | ♦ | ♦ | |
| | | | (945 265 1774) | | | | | | | | |
| | | | (945 265 2674) | | | | | | | | |
| 39 | | 389 993 5301 | | 1 | YAĞ BASINÇ YAYI | SPRING | | | ♦ | ♦ | |
| 40 | | 389 269 1026 | (389 269 0926) | 1 | YAĞ BASINÇ VALFİ | SELECTOR VALVE | | | ♦ | ♦ | |
| 41 | K21.04210 | 013 997 0148 | (020 997 8348) | 1 | YAĞ BASINÇ ORİNGİ | O-RING | 13,3X2,4mm | | ♦ | ♦ | |
| 42 | | 389 269 1444 | (389 269 0744) | 1 | YAĞ BASINÇ VALF GÖVDESİ | VALVE INSERT | | | ♦ | ♦ | |
| 43 | | 389 993 4401 | | 1 | YAĞ BASINÇ VALF MİL YAYI | SPRING | | | ♦ | ♦ | |
| 44 | | 389 269 0826 | | 1 | YAĞ BASINÇ VALF MİLİ | SELECTOR VALVE | | | ♦ | ♦ | |
| 45 | | 389 269 0844 | | 1 | YAĞ BASINÇ VALF TOPU | BALL | | | ♦ | ♦ | |
| 46 | K21.04212 | 013 997 0048 | (020 997 8248) | 1 | YAĞ BASINÇ VALF ORİNGİ | O-RING | 19,2X3mm | | ♦ | ♦ | |
| 47 | | 001481 004001 | (001481 004049) | 1 | EMNİYET PİMİ | CLAMPING SLEEVE | | | ♦ | ♦ | |
| 48 | K21.06962 | 655 260 0157 | | Kit | YAĞ BASINÇ VALFİ KOMPLE | VALVE KIT | | | ♦ | ♦ | |
| 49 | K21.06979 | 389 265 0176 | (389 265 0076) | 1 | YAĞ BASINÇ VALFİ ALIN FİBERİ | WASHER | | | ♦ | ♦ | ♦ |
| 50 | K21.06953 | 960 260 1057 | | Kit | YAĞ BASINÇ VALFİ KOMPLE | VALVE KIT | | | ♦ | ♦ | ♦ |
| 51 | K21.06973 | 960 260 1257 | | Kit | YAĞ BASINÇ VALFİ KOMPLE | VALVE KIT | | | ♦ | ♦ | ♦ |
| 52 | K21.03198 | 947 269 1010 | (945 269 1010) | 1 | YAĞ POMPA MİLİ | OIL PUMP SHAFT | | | ♦ | ♦ | ♦ |
| 52 | K21.06298 | 947 269 1110 | (945 269 1110) | 1 | YAĞ POMPA MİLİ | OIL PUMP SHAFT | | | ♦ | ♦ | ♦ |
| 53 | K21.03648 | 010 981 9025 | (010 981 8425) | 1 | PTO MİL BİLYASI | ROLLER BEARING | 17X35X10mm | | ♦ | ♦ | ♦ |
| | | | (008 981 5425) | | | | | | | | |
| | | | (008 981 3425) | | | | | | | | |
| | | | (400 981 2525) | | | | | | | | |
| 54 | | 912009 045100 | | 1 | PTO MİL BİLYA SEKMANI | RETAINING RING | 1,50mm | | ♦ | ♦ | ♦ |
| 55 | K21.94304 | | | 1 | YAĞ POMPA PULU | SPACER WASHER | 0,70mm | | ♦ | ♦ | ♦ |
| 55 | K21.04304 | 389 262 6254 | | 1 | YAĞ POMPA PULU | SPACER WASHER | 0,80mm | | ♦ | ♦ | ♦ |
| 55 | K21.04303 | 389 262 5954 | | 1 | YAĞ POMPA PULU | SPACER WASHER | 0,90mm | | ♦ | ♦ | ♦ |
| 55 | K21.04302 | 389 262 5754 | | 1 | YAĞ POMPA PULU | SPACER WASHER | 1,00mm | | ♦ | ♦ | ♦ |
| 55 | K21.04301 | 389 262 5554 | | 1 | YAĞ POMPA PULU | SPACER WASHER | 1,10mm | | ♦ | ♦ | ♦ |
| 55 | K21.04305 | 389 262 5354 | | 1 | YAĞ POMPA PULU | SPACER WASHER | 1,20mm | | ♦ | ♦ | ♦ |
| 56 | K21.03412 | 945 269 0201 | (389 269 2501) | 1 | YAĞ POMPA KAPAĞI | OIL PUMP COVER | | | ♦ | ♦ | ♦ |

NOTES :
Parts encoded alphabetic and numaric are used together.

NOTLAR :
Alfabetik ve rakam ile kodlanan parçalar birlikte kullanılır.





Original parts names, oem numbers, symbols and descriptions used in this catalogue are for reference purposes only.

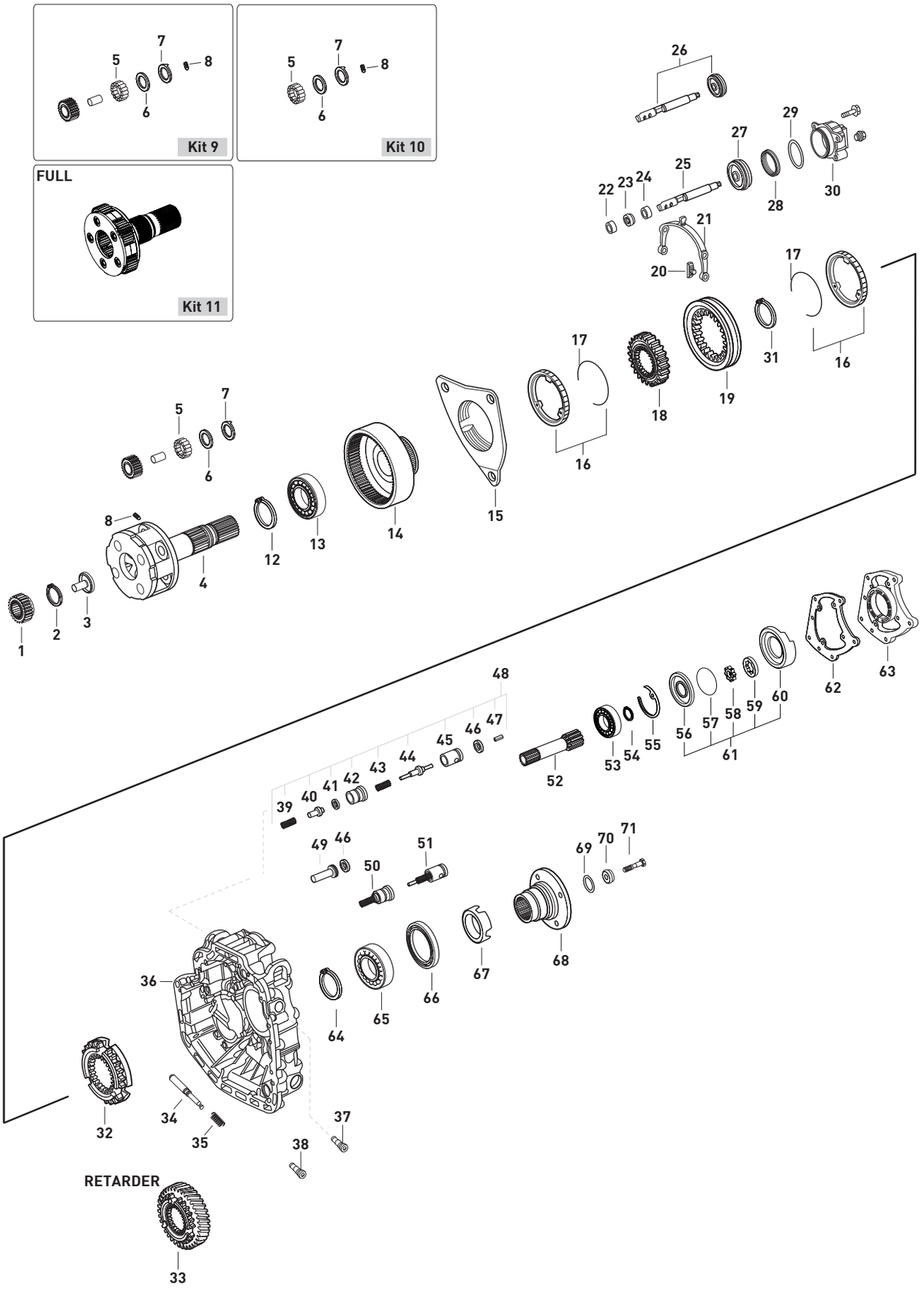






Original parts names, oem numbers, symbols and descriptions used in this catalogue are for reference purposes only.

| Fig. | Kacmaz No | Oem No | Oem Old No | Pcs. | Ürün Tanımı | Description | Sizes | Not | 715570 | 715576 | 715577 |
|---|---|---|---|---|---|---|---|---|---|---|---|
| 57 | K21.03511 | 029 997 5748 | | 1 | YAĞ POMPA ORİNGİ | O-RING | 112X2,5mm | | ♦ | ♦ | ♦ |
| 58 | K21.03413 | 389 269 1406 | (389 269 1506) | 1 | YAĞ POMPA İÇ ROTOR | OIL PUMP GEAR | | | ♦ | ♦ | ♦ |
| | | | (945 260 0090) | | | | | | | | |
| 59 | K21.03414 | 389 269 0706 | (389 269 1206) | 1 | YAĞ POMPA DIŞ ROTOR | ROTOR | | | ♦ | ♦ | ♦ |
| 60 | K21.03478 | 947 269 1001 | | 1 | YAĞ POMPA GÖVDESİ | OIL PUMP HOUSING | | | ♦ | ♦ | ♦ |
| 61 | K21.03475 | 389 260 0790 | | 1 | YAĞ POMPASI | OIL PUMP | | | ♦ | ♦ | ♦ |
| 62 | K21.03667 | 945 261 0680 | (945 261 0580) | 1 | PTO KAPAK CONTASI | GASKET | | | ♦ | ♦ | ♦ |
| | | | (945 261 0080) | | | | | | | | |
| 62 | K21.04306 | 945 261 0280 | | 1 | PTO KAPAK CONTASI | GASKET | | | ♦ | ♦ | ♦ |
| 63 | K21.03566 | 945 261 1033 | (945 261 1433) | 1 | PTO KAPAĞI | COVER | | | ♦ | ♦ | ♦ |
| | | | (400 261 1133) | | | | | | | | |
| 64 | K21.06863 | 000472 120000 | | 1 | ŞANZIMAN HEYKEL BİLYA SEKMANI | RETAINING RING | | | ♦ | ♦ | ♦ |
| 65 | K21.03650 | 010 981 9125 | (009 981 0325) | 1 | ŞANZIMAN ARKA BİLYA | ROLLER BEARING | 65X120X23mm | | ♦ | ♦ | ♦ |
| | | | (009 981 0425) | | | | | | | | |
| | | | (009 981 0025) | | | | | | | | |
| | | | (009 981 0125) | | | | | | | | |
| | | | (009 981 0225) | | | | | | | | |
| 66 | K21.03519 | 023 997 8847 | (023 997 8547) | 1 | ŞANZIMAN ARKA KEÇE | OIL SEAL | 80X100X15,5mm | | ♦ | ♦ | ♦ |
| | | | (020 997 6447) | | | | | | | | |
| 67 | K21.04144 | 387 262 0928 | | 1 | ŞANZIMAN KM DEVİR SACI | PULSE STAR | | | ♦ | ♦ | ♦ |
| 68 | K21.03346 | 947 262 0445 | | 1 | ŞANZIMAN FLANŞI | COMPANION FLANGE | 4-H, Ø180mm | | ♦ | ♦ | ♦ |
| 68 | | 947 262 0345 | (976 262 0345) | 1 | ŞANZIMAN FLANŞI | COMPANION FLANGE | 4-H, Ø150mm | | ♦ | | |
| 69 | K21.06990 | 027 997 3048 | (023 997 5548) | 1 | ŞANZIMAN FLANŞ ORİNGİ | O-RING | 56,52X5,33mm | | ♦ | ♦ | ♦ |
| | | | (023 997 6048) | | | | | | | | |
| 70 | | 976 262 0362 | (976 262 0162) | 1 | ŞANZ.FLANŞI ALIN PULU | THRUST WASHER | | | ♦ | ♦ | ♦ |
| 71 | | 000000 000963 | | 1 | ŞANZ.FLANŞI ALIN VİDASI | SCREW | M20X1,5X80mm | | ♦ | ♦ | ♦ |

NOTES :
Parts encoded alphabetic and numaric are used together.

NOTLAR :
Alfabetik ve rakam ile kodlanan parçalar birlikte kullanılır.





Original parts names, oem numbers, symbols and descriptions used in this catalogue are for reference purposes only.

SYNCHRONIZER KIT Const./3rd
NEW MODEL

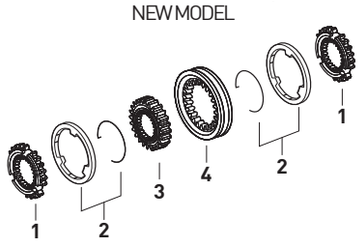


| Fig. | Kacmaz No. | Oem No | Oem Old No | Pcs. | Ürün Tanımı | Description |
|---|---|---|---|---|---|---|
| | K21.06198 | | | Kit | PRİZ./3.VİTES SENK.KİT | SYNCH.KIT Const./3rd |
| 1 | K21.03314 | 945 262 7834 | (945 262 5734) | 2 | PRİZ./3.VİT.SENKROMENÇ | ENGAGING RING |
| 2 | K21.03136 | 945 260 2245 | (946 262 6337) | 2 | PRİZ./3.VİT.FRENLEME (Mo) | SYNCHRONIZING CONE / Mo |
| 3 | K21.03316 | 947 262 0435 | | 1 | PRİZ./3.VİTES YILDIZ DİŞLİ | SYNCHRONIZER HUB |
| 4 | K21.03137 | 945 262 6823 | (945 262 6423) | 1 | PRİZ./3.VİTES HALKA | ENGAGING SLEEVE |

SYNCHRONIZER KIT Const./3rd
NEW MODEL

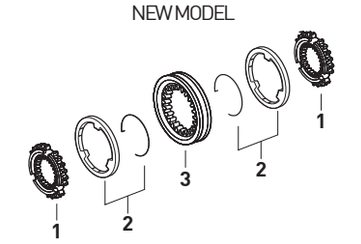


| Fig. | Kacmaz No. | Oem No | Oem Old No | Pcs. | Ürün Tanımı | Description |
|---|---|---|---|---|---|---|
| | K21.06521 | | | Kit | PRİZ./3.VİTES SENK.KİT | SYNCH.KIT Const./3rd |
| 1 | K21.03314 | 945 262 7834 | (945 262 5734) | 2 | PRİZ./3.VİT.SENKROMENÇ | ENGAGING RING |
| 2 | K21.03136 | 945 260 2245 | (946 262 6337) | 2 | PRİZ./3.VİT.FRENLEME (Mo) | SYNCHRONIZING CONE / Mo |
| 3 | K21.03137 | 945 262 6823 | (945 262 6423) | 1 | PRİZ./3.VİTES HALKA | ENGAGING SLEEVE |

SYNCHRONIZER KIT Const./3rd
OLD MODEL

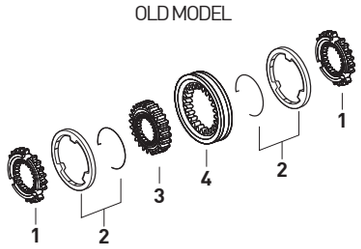


| Fig. | Kacmaz No. | Oem No | Oem Old No | Pcs. | Ürün Tanımı | Description |
|---|---|---|---|---|---|---|
| | K21.06200 | | | Kit | PRİZ./3.VİTES SENK.KİT | SYNCH.KIT Const./3rd |
| 1 | K21.03007 | 945 262 4034 | (389 262 5334) | 2 | PRİZ./3.VİTES SENKROMENÇ | ENGAGING RING |
| 2 | K21.03015 | 389 262 0637 | (387 262 0837) | 2 | PRİZ./3.VİTES FRENLEME (Mo) | SYNCHRONIZING CONE / Mo |
| 3 | K21.03316 | 947 262 0435 | | 1 | PRİZ./3.VİTES YILDIZ DİŞLİ | SYNCHRONIZER HUB |
| 4 | K21.03002 | 945 262 2823 | (945 262 0323) | 1 | PRİZDİREK VE 3.VİTES HALKA | ENGAGING SLEEVE |

SYNCHRONIZER KIT Const./3rd
OLD MODEL

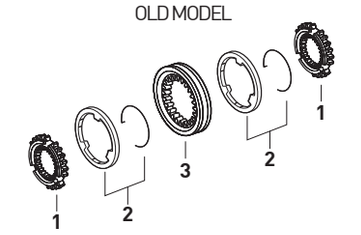


| Fig. | Kacmaz No. | Oem No | Oem Old No | Pcs. | Ürün Tanımı | Description |
|---|---|---|---|---|---|---|
| | K21.06522 | | | Kit | 3.VİTES SENKROMENÇ KİT | SYNCH.KIT Const./3rd |
| 1 | K21.03007 | 945 262 4034 | (389 262 5334) | 2 | PRİZ./3.VİTES SENKROMENÇ | ENGAGING RING |
| 2 | K21.03015 | 389 262 0637 | (387 262 0837) | 2 | PRİZ./3.VİTES FRENLEME (Mo) | SYNCHRONIZING CONE / Mo |
| 3 | K21.03002 | 945 262 2823 | (945 262 0323) | 1 | PRİZDİREK VE 3.VİTES HALKA | ENGAGING SLEEVE |

SYNCHRONIZER KIT 1st/2nd
NEW MODEL

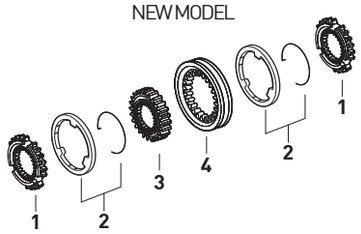


| Fig. | Kacmaz No. | Oem No | Oem Old No | Pcs. | Ürün Tanımı | Description |
|---|---|---|---|---|---|---|
| | K21.06201 | | | Kit | 1./2.VİTES SENKROMENÇ KİT | SYNCH.KIT 1st/2nd |
| 1 | K21.03147 | 945 262 7734 | (945 262 3634) | 2 | 1./2.VİTES SENKROMENÇ | ENGAGING RING |
| 2 | K21.03136 | 945 260 2245 | (946 262 6337) | 2 | 1./2.VİTES FRENLEME (Mo) | SYNCHRONIZING CONE / Mo |
| 3 | K21.03321 | 947 262 0135 | | 1 | 1./2.VİTES YILDIZ DİŞLİ | SYNCHRONIZER HUB |
| 4 | K21.03137 | 945 262 6823 | (945 262 6423) | 1 | 1./2.VİTES HALKA | ENGAGING SLEEVE |

SYNCHRONIZER KIT 1st/2nd
NEW MODEL

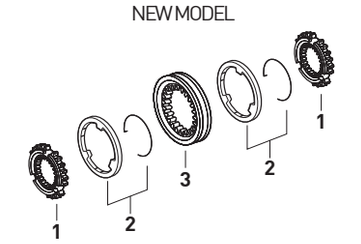


| Fig. | Kacmaz No. | Oem No | Oem Old No | Pcs. | Ürün Tanımı | Description |
|---|---|---|---|---|---|---|
| | K21.06523 | | | Kit | 1./2.VİTES SENKROMENÇ KİT | SYNCH.KIT 1st/2nd |
| 1 | K21.03147 | 945 262 7734 | (945 262 3634) | 2 | 1./2.VİTES SENKROMENÇ | ENGAGING RING |
| 2 | K21.03136 | 945 260 2245 | (946 262 6337) | 2 | 1./2.VİTES FRENLEME (Mo) | SYNCHRONIZING CONE / Mo |
| 3 | K21.03137 | 945 262 6823 | (945 262 6423) | 1 | 1./2.VİTES HALKA | ENGAGING SLEEVE |



**Original parts names, oem numbers, symbols and descriptions used in this catalogue are for reference purposes only.**

| Fig. | Kacmaz No. | Oem No | Oem Old No | Pcs. | Ürün Tanımı | Description |
|---|---|---|---|---|---|---|
| | K21.06202 | | | Kit | 1./2.VİTES SENKROMENÇ KİT | SYNCH.KIT Const./3rd |
| 1 | K21.03024 | 389 262 5434 | (945 262 0334) | 2 | 1./2.VİTES SENKROMENÇ | ENGAGING RING |
| 2 | K21.03015 | 389 262 0637 | (387 262 0837) | 2 | 1./ 2.VİTES FRENLEME (Mo) | SYNCHRONIZING CONE/Mo |
| 3 | K21.03321 | 947 262 0135 | | 1 | 1./2.VİTES YILDIZ DİŞLİ | SYNCHRONIZER HUB |
| 4 | K21.03002 | 945 262 2823 | (945 262 0323) | 1 | 1./ 2.VİTES HALKA | ENGAGING SLEEVE |

SYNCHRONIZER KIT 1st/2nd
OLD MODEL

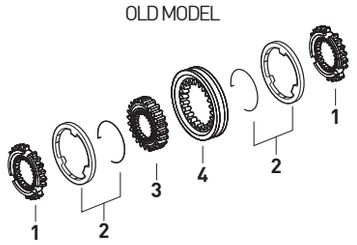


| Fig. | Kacmaz No. | Oem No | Oem Old No | Pcs. | Ürün Tanımı | Description |
|---|---|---|---|---|---|---|
| | K21.06203 | | | Kit | AĞIR SERİ SENK.KİT | SYNCH.KIT PLANETARY |
| 1 | K21.03305 | 947 260 0736 | | 1 | TABLA SENKROMENÇ | FOLLOWER RING |
| 2 | K21.03185 | 947 260 0945 | | 2 | AĞIR SERİ FRENLEME (Mo) | SYNCHRONIZING CONE/Mo |
| 3 | K21.03079 | 389 262 4935 | (389 262 2035) | 1 | AĞIR SERİ YILDIZ DİŞLİ 73 DİŞ | SYNCHRONIZER HUB 73 T. |
| 4 | K21.03033 | 945 262 6923 | (930 262 0623) | 1 | AĞIR SERİ HALKA | ENGAGING SLEEVE |
| 5 | K21.03431 | 960 265 0049 | (947 265 0349) | 2 | AĞIR SERİ HİLAL PABUCU | SLIDING PAD |
| 6 | K21.03038 | 947 262 0334 | | 1 | SERİ SENKROMENÇ | ENGAGING RING |

SYNCHRONIZER KIT PLANETARY
NEW MODEL

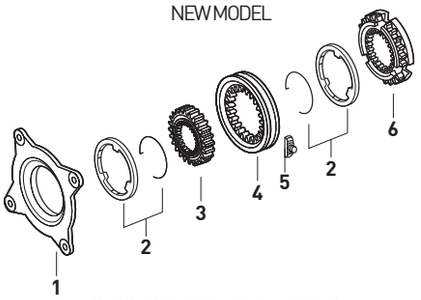


| Fig. | Kacmaz No. | Oem No | Oem Old No | Pcs. | Ürün Tanımı | Description |
|---|---|---|---|---|---|---|
| | K21.06204 | | | Kit | AĞIR SERİ SENK.KİT | SYNCH.KIT PLANETARY |
| 1 | K21.03185 | 947 260 0945 | | 2 | AĞIR SERİ FRENLEME (Mo) | SYNCHRONIZING CONE/Mo |
| 2 | K21.03079 | 389 262 4935 | (389 262 2035) | 1 | AĞIR SERİ YILDIZ DİŞLİ 73 DİŞ | SYNCHRONIZER HUB 73 T. |
| 3 | K21.03033 | 945 262 6923 | (930 262 0623) | 1 | AĞIR SERİ HALKA | ENGAGING SLEEVE |
| 4 | K21.03431 | 960 265 0049 | (947 265 0349) | 2 | AĞIR SERİ HİLAL PABUCU | SLIDING PAD |

SYNCHRONIZER KIT PLANETARY
NEW MODEL

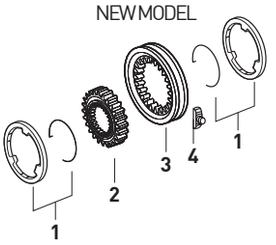


| Fig. | Kacmaz No. | Oem No | Oem Old No | Pcs. | Ürün Tanımı | Description |
|---|---|---|---|---|---|---|
| | K21.06525 | | | Kit | AĞIR SERİ SENK. KİT | SYNCH.KIT PLANETARY |
| 1 | K21.03305 | 947 260 0736 | | 1 | TABLA SENKROMENÇ | FOLLOWER RING |
| 2 | K21.03185 | 947 260 0945 | | 2 | AĞIR SERİ FRENLEME (Mo) | SYNCHRONIZING CONE/Mo |
| 3 | K21.03033 | 945 262 6923 | (930 262 0623) | 1 | AĞIR SERİ HALKA | ENGAGING SLEEVE |
| 4 | K21.03431 | 960 265 0049 | (947 265 0349) | 2 | AĞIR SERİ HİLAL PABUCU | SLIDING PAD |
| 5 | K21.03038 | 947 262 0334 | | 1 | SERİ SENKROMENÇ | ENGAGING RING |

SYNCHRONIZER KIT PLANETARY
NEW MODEL

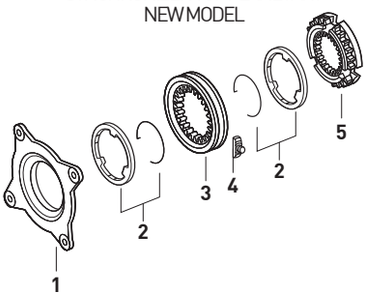


| Fig. | Kacmaz No. | Oem No | Oem Old No | Pcs. | Ürün Tanımı | Description |
|---|---|---|---|---|---|---|
| 1 | K21.03085 | 947 264 0005 | (389 269 0310) | 1 | YAĞ POMPA MİLİ | OIL PUMP SHAFT |
| 1 | K21.03670 | 947 264 0105 | | 1 | YAĞ POMPA MİLİ (RETARDER) | OIL PUMP SHAFT |
| 2 | K21.03511 | 029 997 5748 | | 1 | YAĞ POMPA KAPAK ORİNGİ | O-RING |
| 3 | K21.03558 | 947 264 0287 | | 1 | YAĞ POMPA KAPAĞI | OIL PUMP COVER |
| 4 | K21.03613 | 004 981 9225 | (004 981 8625) | 1 | PTO MİL BİLYASI | ROLLER BEARING |
| 5 | K21.06964 | 000471 045000 | (003 994 3741) | 1 | PTO MİL BİLYA SEKMANI | RETAINING RING |
| 6 | K21.06998 | 017 981 1705 | | 1 | PTO BORU DİŞLİ BİLYASI | ROLLER BEARING |
| 7 | | 947 260 4708 | | 1 | PTO BORU DİŞLİ | GEAR |
| 8 | | 017 981 1805 | | 2 | PTO BORU DİŞLİ BİLYASI | ROLLER BEARING |
| 9 | K21.04334 | 945 264 0006 | | 1 | PTO ARA ADAPTÖR MİLİ | INTERM.SHAFT |
| 10 | | 387 264 3652 | | 2 | BİLYA AYAR RAYNELİ | THRUST WASHER |
| 10 | | 387 264 3752 | | 2 | BİLYA AYAR RAYNELİ | THRUST WASHER |
| 10 | | 387 264 3852 | | 2 | BİLYA AYAR RAYNELİ | THRUST WASHER |
| 11 | | 000988 022010 | | 2 | BİLYA AYAR PULU | THRUST WASHER |
| 12 | K21.04333 | 385 993 5201 | | 1 | YAY | SPRING |
| 13 | | 912009 022100 | | 1 | BİLYA AYAR PUL SEKMANI | RETAINING RING |
| 14 | K21.04332 | 000625 000629 | | 1 | PTO MIL ŞAPKASI | PTO SHAFT CAP |
| 15 | | 016 981 6705 | | 1 | PTO BORU DİŞLİ BİLYASI | ROLLER BEARING |
| 16 | | 947 264 0621 | (947 264 0521) | 1 | PTO BORU DİŞLİ | GEAR |
| 17 | K21.04362 | | | kit | ARA ADAPTÖR MİLİ KOMPLE | INTERM.SHAFT COMP. |
| 18 | K21.06346 | 970 260 0457 | | kit | P.T.O VENTİLİ | VALVE |

P.T.O. (POWER TAKE OFF)

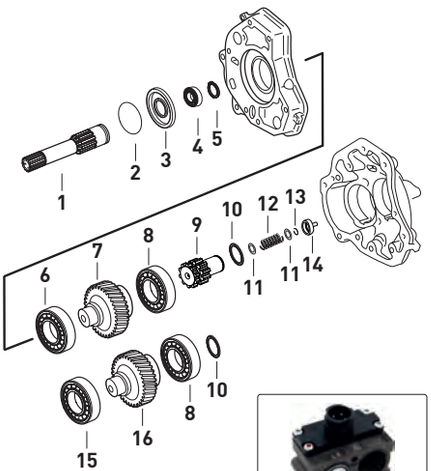





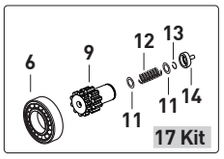




Original parts names, oem numbers, symbols and descriptions used in this catalogue are for reference purposes only.

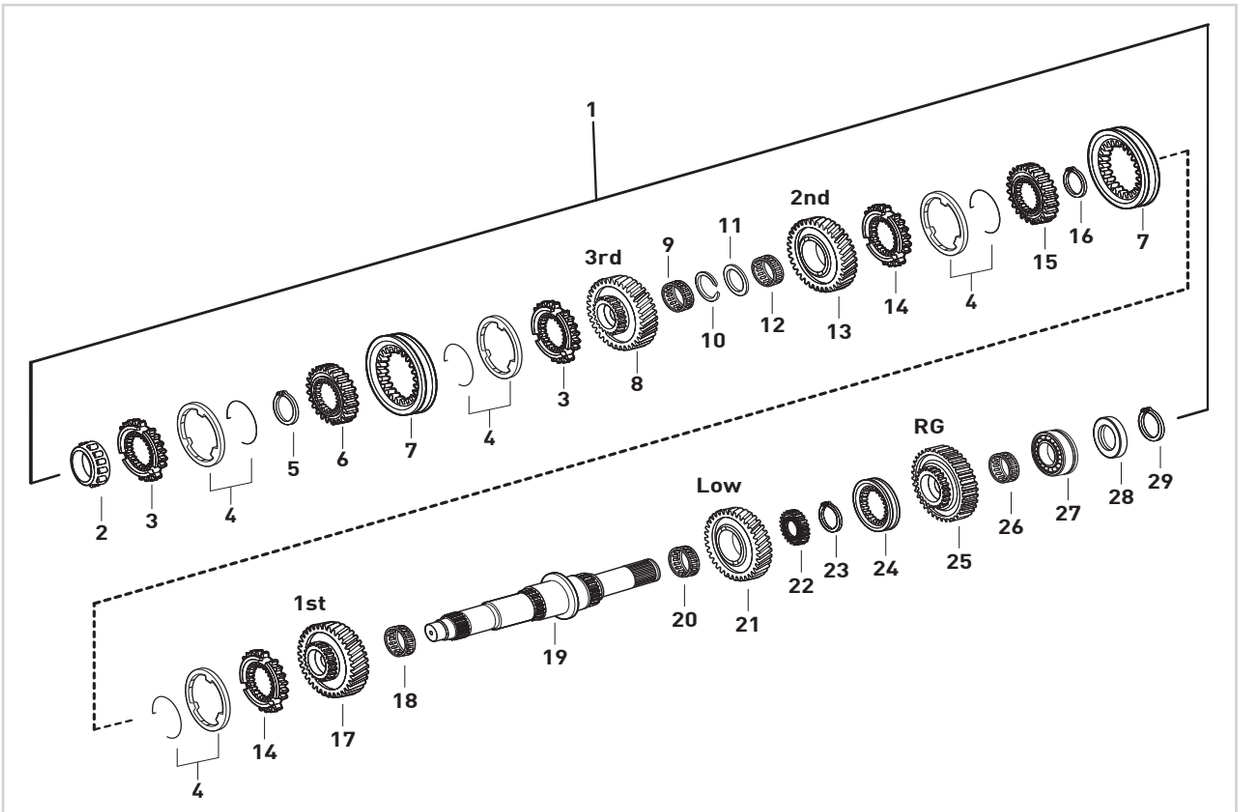


| Fig. | Kacmaz No. | Oem No | Oem Old No | Pcs. | Ürün Tanımı | Description | Sizes |
|---|---|---|---|---|---|---|---|
| 1 | K21.06449 | | | Kit | KAMALI MİL KOMPLE | MAIN SHAFT COMPLETE | |
| 2 | K21.03645 | 016 981 0505 | (016 981 1505) | 1 | KAMALI MİL UÇ BİLYA | ROLLER BEARING | 39,69X30,39mm |
| 3 | K21.03007 | 945 262 4034 | (389 262 5334) | 2 | PRİZDİREK VE 3.VİTES SENKROMENÇ | ENGAGING RING | |
| 4 | K21.03015 | 389 262 0637 | (387 262 0837) | 4 | PRİZ.VE 1./2./3.VİTES FRENLEME (Mo) | SYNCHRONIZING CONE / Mo | |
| 5 | K21.04361 | 976 262 0173 | | 1 | PRİZ.VE 3.VİT.YIL.DİŞLİ SEKMANI | RETAINING RING | 2,00mm |
| 6 | K21.03316 | 947 262 0435 | | 1 | PRİZDİREK VE 3.VİTES YILDIZ DİŞLİ | SYNCHRONIZER HUB | |
| 7 | K21.03002 | 945 262 2823 | (945 262 0323) | 2 | PRİZDİREK VE 1./2./3.VİTES HALKA | ENGAGING SLEEVE | |
| 8 | K21.03317 | 947 262 0613 | (947 262 0413) | 1 | 3.VİTES DİŞLİSİ 31 DİŞ | GEAR 3rd 31 T. | |
| 9 | K21.03833 | 019 981 6010 | (019 981 5810) | 1 | 3.VİTES MASURA BİLYA | NEEDLE CAGE | 60X68X54mm |
| 10 | K21.06913 | 389 262 3473 | | 1 | 3.VİTES MASURA BİLYA SEKMANI | RETAINING RING | 2,50mm |
| 11 | K21.04143 | 389 262 1862 | | 1 | 2./3.VİTES MASURA BİLYA PULU | THRUST WASHER | |
| 12 | K21.03834 | 021 981 5210 | (021 981 6510) | 1 | 2.VİTES MASURA BİLYA | NEEDLE CAGE | 60X76X42mm |
| 13 | K21.03319 | 947 262 0612 | (947 262 0412) | 1 | 2.VİTES DİŞLİSİ 36 DİŞ | GEAR 2nd 36 T | |
| 14 | K21.03024 | 389 262 5434 | (945 262 0334) | 2 | 1./2.VİTES SENKROMENÇ | ENGAGING RING | |
| 15 | K21.03321 | 947 262 0135 | | 1 | 1./2.VİTES YILDIZ DİŞLİ | SYNCHRONIZER HUB | |
| 16 | K21.04337 | 387 262 0873 | | 1 | R./C.VİTES YILDIZ DİŞLİ SEKMANI | RETAINING RING | 2,60mm |
| 17 | K21.03322 | 947 262 1911 | (947 262 1611) | 1 | 1.VİTES DİŞLİSİ 40 DİŞ | GEAR 1st 40 T. | |
| 18 | K21.03817 | 019 981 4410 | (007 981 4210) | 1 | 2.VİTES MASURA BİLYA | NEEDLE CAGE | 75X83X55mm |
| 19 | K21.03324 | 947 262 0305 | | 1 | KAMALI MİL | MAIN SHAFT | |
| 20 | K21.03827 | 013 981 1210 | (006 981 6410) | 1 | C.VİTES MASURA BİLYA | NEEDLE CAGE | 75X83X33mm |
| 21 | K21.03325 | 947 262 1811 | (947 262 2411) | 1 | C VİTES DİŞLİSİ 41 DİŞ | GEAR CRAWLING GEAR 41 T. | |
| 22 | K21.03328 | 947 262 0735 | (947 262 0835) | 1 | GERİ VİTES YILDIZ DİŞLİ | SYNCHRONIZER HUB | |
| 23 | K21.04352 | 387 262 0673 | | 1 | R./C.VİTES YILDIZ DİŞLİ SEKMANI | RETAINING RING | 2,50mm |
| 24 | K21.03330 | 945 262 2023 | | 1 | GERİ VİTES HALKASI | ENGAGING SLEEVE | |
| 25 | K21.03331 | 947 262 0633 | (947 262 1133) | 1 | GERİ VİTES DİŞLİSİ 39 DİŞ | REVERSE GEAR 39 T. | |
| 26 | K21.03835 | 012 981 5410 | (021 981 6310) | 1 | GERİ VİTES MASURA BİLYA | NEEDLE CAGE | 65X73X30mm |
| 27 | K21.03653 | 016 981 0105 | (016 981 0005) | 1 | KAMALI MİL ARKA BİLYA | ROLLER BEARING | 55X130X27,25mm |
| 28 | K21.04133 | 947 262 0152 | | 1 | GÜNEŞ DİŞLİ PULU | THRUST WASHER | |
| 29 | K21.04354 | 000471 050000 | | 1 | KAMALI MİL ARKA BİLYA SEKMANI | RETAINING RING | 50X2mm |



**Original parts names, oem numbers, symbols and descriptions used in this catalogue are for reference purposes only.**

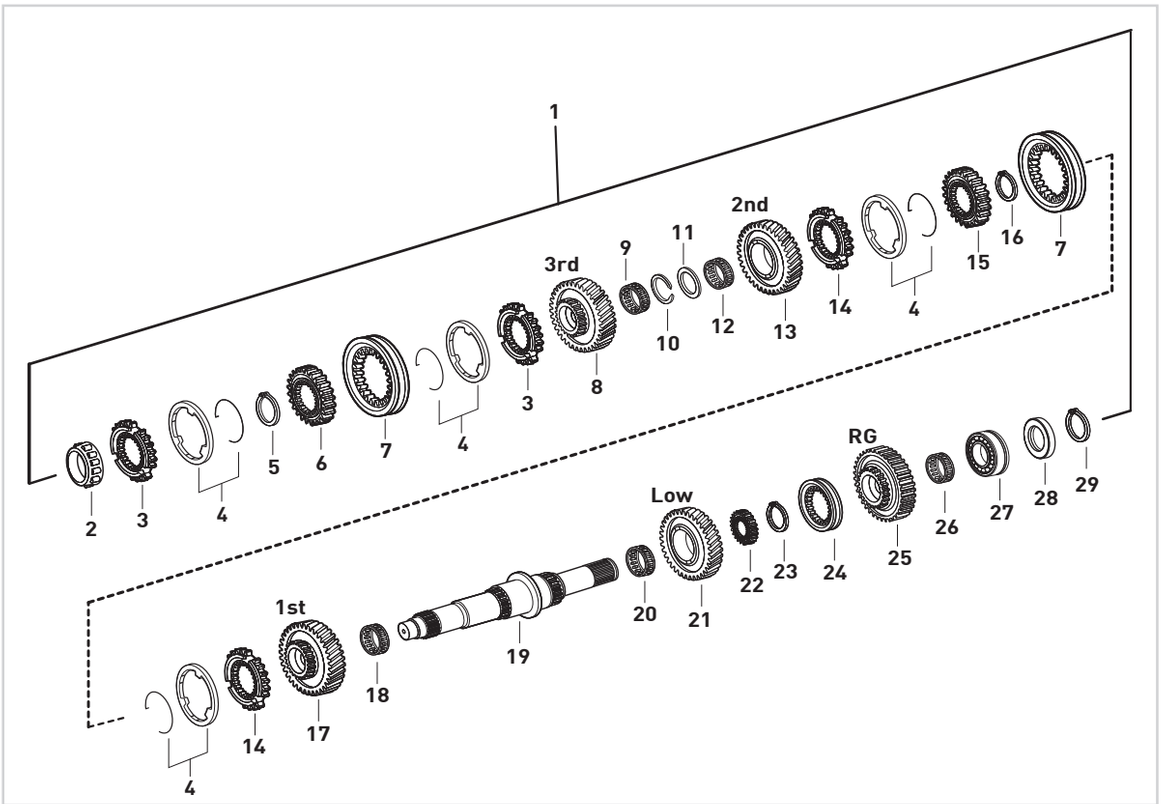


| Fig. | Kacmaz No. | Oem No | Oem Old No | Pcs. | Ürün Tanımı | Description | Sizes |
|---|---|---|---|---|---|---|---|
| 1 | K21.06381 | | | kit | KAMALI MİL KOMPLE | MAIN SHAFT COMPLETE | |
| 2 | K21.03645 | 016 981 0505 | (016 981 1505) | 1 | KAMALI MİL UÇ BİLYA | ROLLER BEARING | 39,69X30,39mm |
| 3 | K21.03314 | 945 262 7834 | (945 262 5734) | 2 | PRİZ.VE 3.VİTES SENKROMENÇ | ENGAGING RING | |
| 4 | K21.03136 | 945 260 2245 | (946 262 6337) | 4 | 1./2./3.PRİZ.SENK.FRENLEME(Mo) | SYNCHRONIZING CONE / Mo | |
| 5 | K21.06958 | 976 262 0773 | | 1 | PRİZ./3.VİTES YIL.DİŞLİ SEKMANI | RETAINING RING | 2,30mm |
| 6 | K21.03316 | 947 262 0435 | | 1 | PRİZ.VE 3.VİTES YILDIZ DİŞLİ | SYNCHRONIZER HUB | |
| 7 | K21.03137 | 945 262 6823 | (945 262 6423) | 2 | 1./2./3.PRİZ.SENKROMENÇ HALKA | ENGAGING SLEEVE | |
| 8 | K21.03317 | 947 262 0613 | (947 262 0413) | 1 | 3.VİTES DİŞLİSİ 31 DİŞ | GEAR 3rd 31 T. | |
| 9 | K21.03833 | 019 981 6010 | (019 981 5810) | 1 | 3.VİTES MASURA BİLYA | NEEDLE CAGE | 60x68x54mm |
| 10 | K21.06913 | 389 262 3473 | | 1 | 3.VİTES MASURA BİLYA SEKMANI | RETAINING RING | 2,50mm |
| 11 | K21.04143 | 389 262 1862 | | 1 | 2./3.VİTES MASURA BİLYA PULU | THRUST WASHER | |
| 12 | K21.03834 | 021 981 5210 | (021 981 6510) | 1 | 2.VİTES MASURA BİLYA | NEEDLE CAGE | 60X76X42mm |
| 13 | K21.03319 | 947 262 0612 | (947 262 0412) | 1 | 2.VİTES DİŞLİSİ 36 DİŞ | GEAR 2nd 36 T. | |
| 14 | K21.03147 | 945 262 7734 | (945 262 3634) | 2 | 1./2.VİTES SENKROMENÇ | ENGAGING RING | |
| 15 | K21.03321 | 947 262 0135 | | 1 | 1./2.VİTES YILDIZ DİŞLİ | SYNCHRONIZER HUB | |
| 16 | K21.04337 | 387 262 0873 | | 1 | R./C.VİTES YILDIZ DİŞLİ SEKMANI | RETAINING RING | 2,60mm |
| 17 | K21.03322 | 947 262 1911 | (947 262 1611) | 1 | 1.VİTES DİŞLİSİ 40 DİŞ | GEAR 1st 40 T. | |
| 18 | K21.03817 | 019 981 4410 | (007 981 4210) | 1 | 2.VİTES MASURA BİLYA | NEEDLE CAGE | 75X83X55mm |
| 19 | K21.03324 | 947 262 0305 | | 1 | KAMALI MİL | MAIN SHAFT | |
| 20 | K21.03827 | 013 981 1210 | (006 981 6410) | 1 | C.VİTES MASURA BİLYA | NEEDLE CAGE | 75X83X33mm |
| 21 | K21.03325 | 947 262 1811 | (947 262 2411) | 1 | C VİTES DİŞLİSİ 41 DİŞ | GEAR CRAWLING GEAR 41 T. | |
| 22 | K21.03328 | 947 262 0735 | (947 262 0835) | 1 | GERİ VİTES YILDIZ DİŞLİ | SYNCHRONIZER HUB | |
| 23 | K21.04352 | 387 262 0673 | | 1 | R./C.VİTES YILDIZ DİŞLİ SEKMANI | RETAINING RING | 2,50mm |
| 24 | K21.03330 | 945 262 2023 | | 1 | GERİ VİTES HALKASI | ENGAGING SLEEVE | |
| 25 | K21.03331 | 947 262 0633 | (947 262 1133) | 1 | GERİ VİTES DİŞLİSİ 39 DİŞ | REVERSE GEAR 39 T. | |
| 26 | K21.03835 | 012 981 5410 | (021 981 6310) | 1 | GERİ VİTES MASURA BİLYA | NEEDLE CAGE | 65X73X30mm |
| 27 | K21.03653 | 016 981 0105 | (016 981 0005) | 1 | KAMALI MİL ARKA BİLYA | ROLLER BEARING | 55X130X27,25mm |
| 28 | K21.04133 | 947 262 0152 | | 1 | GÜNEŞ DİŞLİ PULU | THRUST WASHER | |
| 29 | K21.04354 | 000471 050000 | | 1 | KAMALI MİL ARKA BİLYA SEKMANI | RETAINING RING | 50X2mm |



Original parts names, oem numbers, symbols and descriptions used in this catalogue are for reference purposes only.

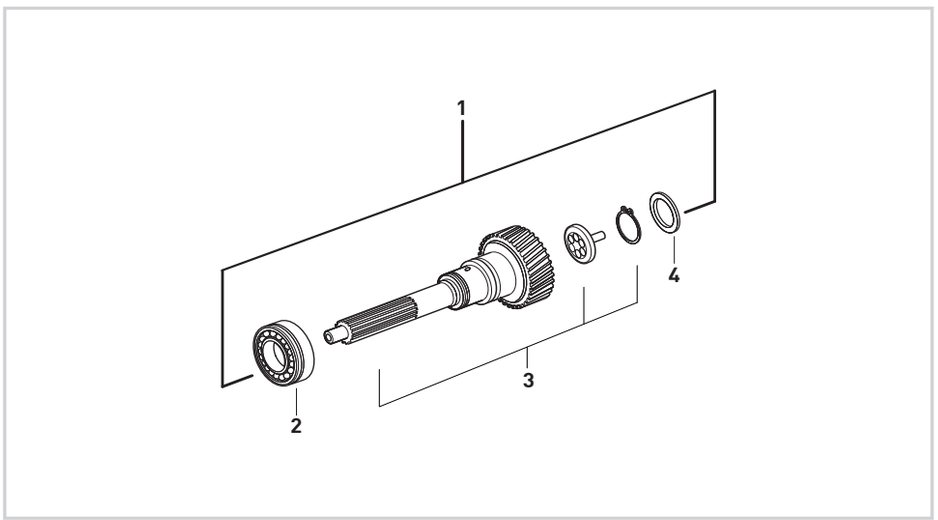


| Fig. | Kacmaz No. | Oem No | Oem Old No | Pcs. | Ürün Tanımı | Description | Sizes |
|---|---|---|---|---|---|---|---|
| 1 | K21.06447 | | | Kit | PRİZDİREK KOMPLE | INPUT SHAFT COMPLETE | |
| 2 | K21.03644 | 016 981 1405 | (016 981 1105) | 1 | PRİZDİREK ÖN BİLYA | ROLLER BEARING | 75X130X27,25mm |
| 3 | K21.03310 | 947 262 4202 | (947 262 1302) | 1 | PRİZDİREK 28 DİŞ | INPUT SHAFT 28 T. | |
| 4 | K21.04142 | 000 262 9462 | | 1 | PRİZDİREK ARKA KEÇE | OIL SEAL | 68,5X90X7,5mm |

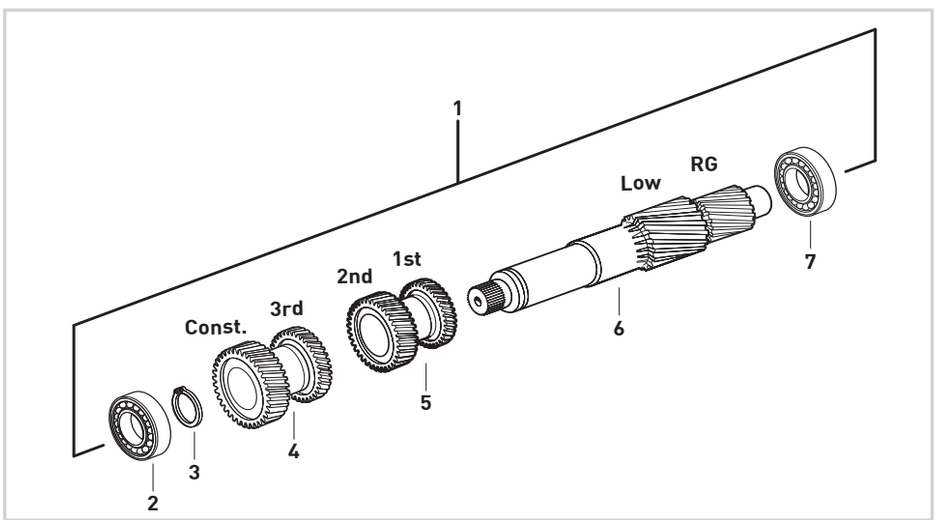


| Fig. | Kacmaz No. | Oem No | Oem Old No | Pcs. | Ürün Tanımı | Description | Sizes |
|---|---|---|---|---|---|---|---|
| 1 | K21.06448 | | | Kit | GRUP MİLİ KOMPLE | COUNTER SHAFT COMPLETE | |
| 2 | K21.03606 | 015 981 9005 | (014 981 1405) | 1 | GRUP MİLİ ÖN BİLYA | ROLLER BEARING | 50,8X100X35mm |
| 3 | K21.04355 | 000471 058000 | | 1 | GRUP MİLİ ÖN BİLYA SEKMANI | RETAINING RING | |
| 4 | K21.03336 | 947 263 0513 | (947 263 0413) | 1 | PRİZ.VE 3.VİT.DİŞ.KARŞILIĞI 32/38 DİŞ | DOUBLE GEAR Const./3rd 32/38 T. | |
| 5 | K21.06248 | 947 263 0111 | | 1 | 1./2.VİT.DİŞ.KARŞILIĞI 21/27 DİŞ | DOUBLE GEAR 1st/2nd 21/27 T. | |
| 6 | K21.03339 | 947 263 0702 | | 1 | GRUP MİLİ 14 DİŞ | COUNTER SHAFT 14 T. | |
| 7 | K21.03647 | 015 981 9705 | (015 981 9605) | 1 | GRUP MİLİ ARKA BİLYA | ROLLER BEARING | 60X110X29,75mm |



**Original parts names, oem numbers, symbols and descriptions used in this catalogue are for reference purposes only.**

# NOTES / NOTLAR



Original parts names, oem numbers, symbols and descriptions used in this catalogue are for reference purposes only.

# GEARBOX G 141- 9 / 14,57 - 1,0

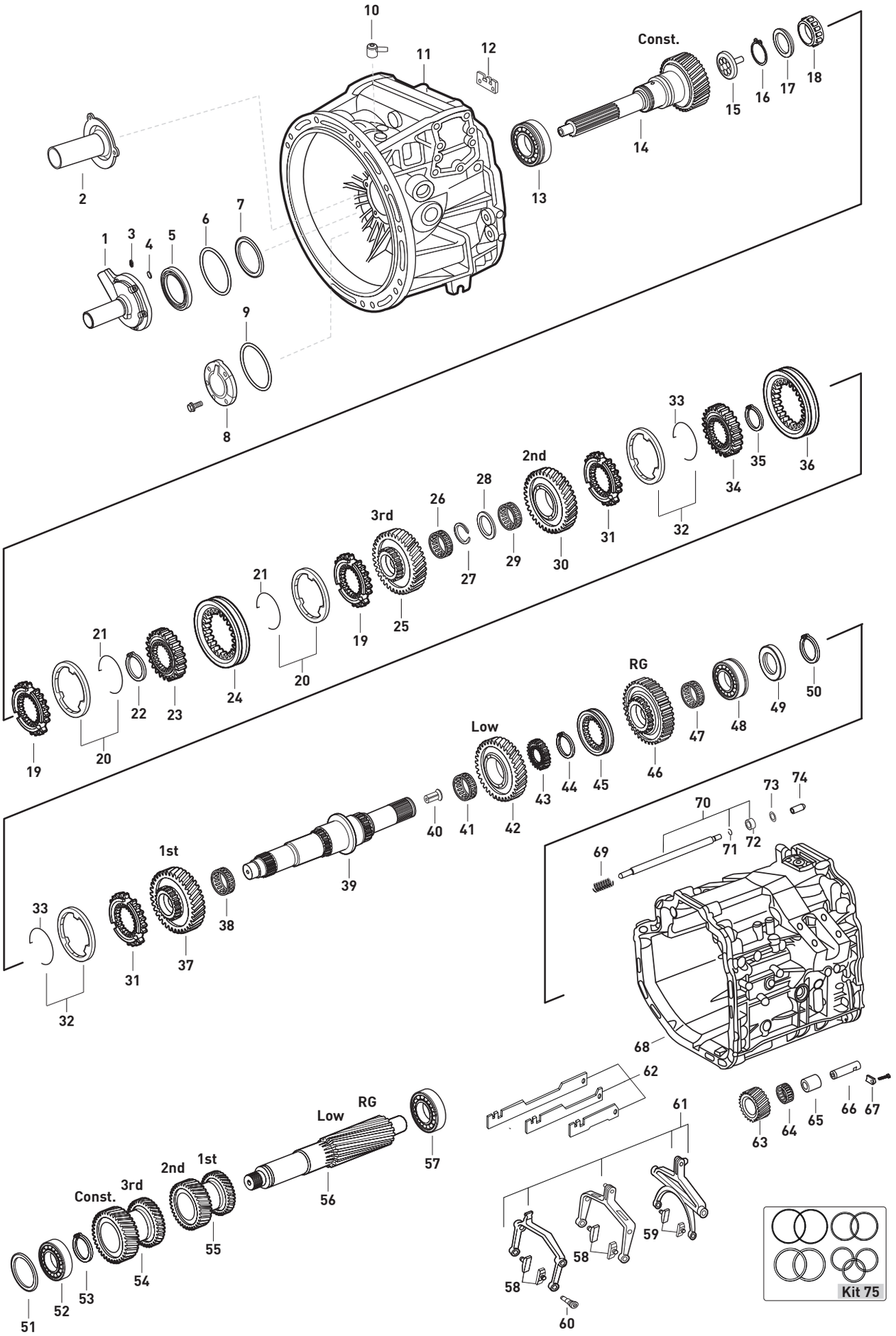




Original parts names, oem numbers, symbols and descriptions used in this catalogue are for reference purposes only.

| Fig. | Kacmaz No | Oem No | Oem Old No | Pcs. | Ürün Tanımı | Description | Sizes | Not | 715571 |
|---|---|---|---|---|---|---|---|---|---|
| 1 | K21.03473 | 947 261 0518 | | 1 | PRİZDİREK KEÇE KAPAĞI | COVER | | | ♦ |
| 1 | K21.03472 | 947 261 1618 | (947 261 1018) | 1 | PRİZDİREK KEÇE KAPAĞI | COVER | | | ♦ |
| | | | (947 261 0918) | | | | | | |
| 2 | K21.06853 | 970 261 0043 | | 1 | PRİZDİREK KEÇE KAPAĞI | COVER | | | ♦ |
| 3 | K21.06637 | 019 997 8348 | (020 997 7948) | 1 | PRİZDİREK KEÇE KAPAK ORİNGİ | O-RING | 14X4mm | | ♦ |
| 4 | K21.06636 | 015 997 4048 | (020 997 8748) | 1 | PRİZDİREK KEÇE KAPAK ORİNGİ | O-RING | 5X3mm | | ♦ |
| 5 | K21.03509 | 019 997 0547 | (023 997 7847) | 1 | PRİZDİREK KEÇESİ | OIL SEAL | 56X72X8mm | | ♦ |
| | | | (019 997 0647) | | | | | | |
| | | | (022 997 8547) | | | | | | |
| 6 | | 029 997 0448 | | 1 | PRİZDİREK KEÇE KAPAK ORİNGİ | O-RING | 129X3mm | | ♦ |
| 7 | | 947 262 2252 | | 1 | PRİZDİREK AYAR RAYNELİ | THRUST WASHER | 1,17mm | | ♦ |
| 7 | K21.04279 | 947 262 2152 | | 1 | PRİZDİREK AYAR RAYNELİ | THRUST WASHER | 1,14mm | | ♦ |
| 7 | K21.04278 | 947 262 2052 | | 1 | PRİZDİREK AYAR RAYNELİ | THRUST WASHER | 1,11mm | | ♦ |
| 7 | | 947 262 1952 | | 1 | PRİZDİREK AYAR RAYNELİ | THRUST WASHER | 1,08mm | | ♦ |
| 7 | K21.04277 | 947 262 1852 | | 1 | PRİZDİREK AYAR RAYNELİ | THRUST WASHER | 1,05mm | | ♦ |
| 7 | | 947 262 1752 | | 1 | PRİZDİREK AYAR RAYNELİ | THRUST WASHER | 1,02mm | | ♦ |
| 7 | | 947 262 1652 | | 1 | PRİZDİREK AYAR RAYNELİ | THRUST WASHER | 0,99mm | | ♦ |
| 7 | K21.04276 | 947 262 1552 | | 1 | PRİZDİREK AYAR RAYNELİ | THRUST WASHER | 0,96mm | | ♦ |
| 7 | | 947 262 1452 | | 1 | PRİZDİREK AYAR RAYNELİ | THRUST WASHER | 0,93mm | | ♦ |
| 7 | K21.04275 | 947 262 1352 | | 1 | PRİZDİREK AYAR RAYNELİ | THRUST WASHER | 0,90mm | | ♦ |
| 7 | | 947 262 1252 | | 1 | PRİZDİREK AYAR RAYNELİ | THRUST WASHER | 0,87mm | | ♦ |
| 7 | | 947 262 1152 | | 1 | PRİZDİREK AYAR RAYNELİ | THRUST WASHER | 0,84mm | | ♦ |
| 7 | K21.04274 | 947 262 1052 | | 1 | PRİZDİREK AYAR RAYNELİ | THRUST WASHER | 0,81mm | | ♦ |
| 7 | | 947 262 0952 | | 1 | PRİZDİREK AYAR RAYNELİ | THRUST WASHER | 0,78mm | | ♦ |
| 7 | K21.04273 | 947 262 0852 | | 1 | PRİZDİREK AYAR RAYNELİ | THRUST WASHER | 0,75mm | | ♦ |
| 7 | | 947 262 0752 | | 1 | PRİZDİREK AYAR RAYNELİ | THRUST WASHER | 0,72mm | | ♦ |
| 7 | | 947 262 0652 | | 1 | PRİZDİREK AYAR RAYNELİ | THRUST WASHER | 0,69mm | | ♦ |
| 7 | K21.04272 | 947 262 0552 | | 1 | PRİZDİREK AYAR RAYNELİ | THRUST WASHER | 0,66mm | | ♦ |
| 7 | | 947 262 0452 | | 1 | PRİZDİREK AYAR RAYNELİ | THRUST WASHER | 0,63mm | | |
| 7 | K21.04271 | 947 262 0352 | | 1 | PRİZDİREK AYAR RAYNELİ | THRUST WASHER | 0,60mm | | ♦ |
| 7 | K21.04358 | | | 1 | PRİZDİREK AYAR RAYNELİ | THRUST WASHER | 0,30mm | | ♦ |
| 7 | K21.04357 | | | 1 | PRİZDİREK AYAR RAYNELİ | THRUST WASHER | 0,20mm | | ♦ |
| 7 | K21.04156 | 389 263 0152 | | 1 | PRİZDİREK AYAR RAYNELİ | THRUST WASHER | 0,10mm | | ♦ |
| 8 | | 976 261 1833 | (976 261 1733) | 1 | GRUP MİLİ ÖN BİLYA KAPAĞI | COVER | | | ♦ |
| | | | (976 261 1633) | | | | | | |
| 9 | K21.06533 | 028 997 2348 | (004 997 2248) | 1 | GRUP MİLİ BİLYA KAPAK ORİNGİ | O-RING | 100X3mm | | ♦ |
| 10 | K21.06529 | 437 261 0082 | (945 261 0082) | 1 | ŞANZIMAN HAVALANDIRMA | CAP | | | ♦ |
| 11 | | 947 260 9711 | | 1 | ŞANZIMAN ÖN GÖVDE | HOUSING | | | ♦ |
| 12 | K21.06509 | 945 267 0459 | | 1 | VİTES HİLAL ÇITA KİLİTLEMESİ | BRACKET | | | ♦ |
| 13 | K21.03644 | 016 981 1405 | (016 981 1105) | 1 | PRİZDİREK ÖN BİLYA | ROLLER BEARING | 75X130X27,25mm | | ♦ |
| | | | (016 981 0805) | | | | | | |
| | | | (016 981 0905) | | | | | | |
| | | | (016 981 1005) | | | | | | |
| 14 | | 947 262 4502 | | 1 | PRİZDİREK | INPUT SHAFT | | | ♦ |
| 14 | K21.03310 | 947 262 4202 | (947 262 1302) | 1 | PRİZDİREK 28 DİŞ | INPUT SHAFT 28 T. | | | ♦ |
| 15 | K21.04001 | 976 269 0034 | (960 269 0434) | 1 | PRİZDİREK YAĞ PİPETİ | OIL COLLECTOR | | | ♦ |
| 16 | K21.04002 | 000 994 9841 | | 1 | PRİZDİREK YAĞ PİPET SEKMANI | RETAINING RING | | | ♦ |
| 17 | K21.04142 | 000 262 9462 | | 1 | PRİZDİREK ARKA KEÇE | OIL SEAL | 68,5X90X7,5mm | | ♦ |
| 18 | K21.03645 | 016 981 0505 | (016 981 1505) | 1 | KAMALI MİL UÇ BİLYA | ROLLER BEARING | 39,69X30,39mm | | ♦ |
| | | | (016 981 0405) | | | | | | |
| | | | (016 981 0605) | | | | | | |
| | | | (016 981 0705) | | | | | | |
| 19 | K21.03147 | 945 262 7734 | (945 262 3634) | 2 | PRİZ.VE 3.VİTES SENKROMENÇ | ENGAGING RING | | (A) | ♦ |

NOTES :
Parts encoded alphabetic and numaric are used together.

NOTLAR :
Alfabetik ve rakam ile kodlanan parçalar birlikte kullanılır.





Original parts names, oem numbers, symbols and descriptions used in this catalogue are for reference purposes only.

# GEARBOX G 141- 9 / 14,57 - 1,0

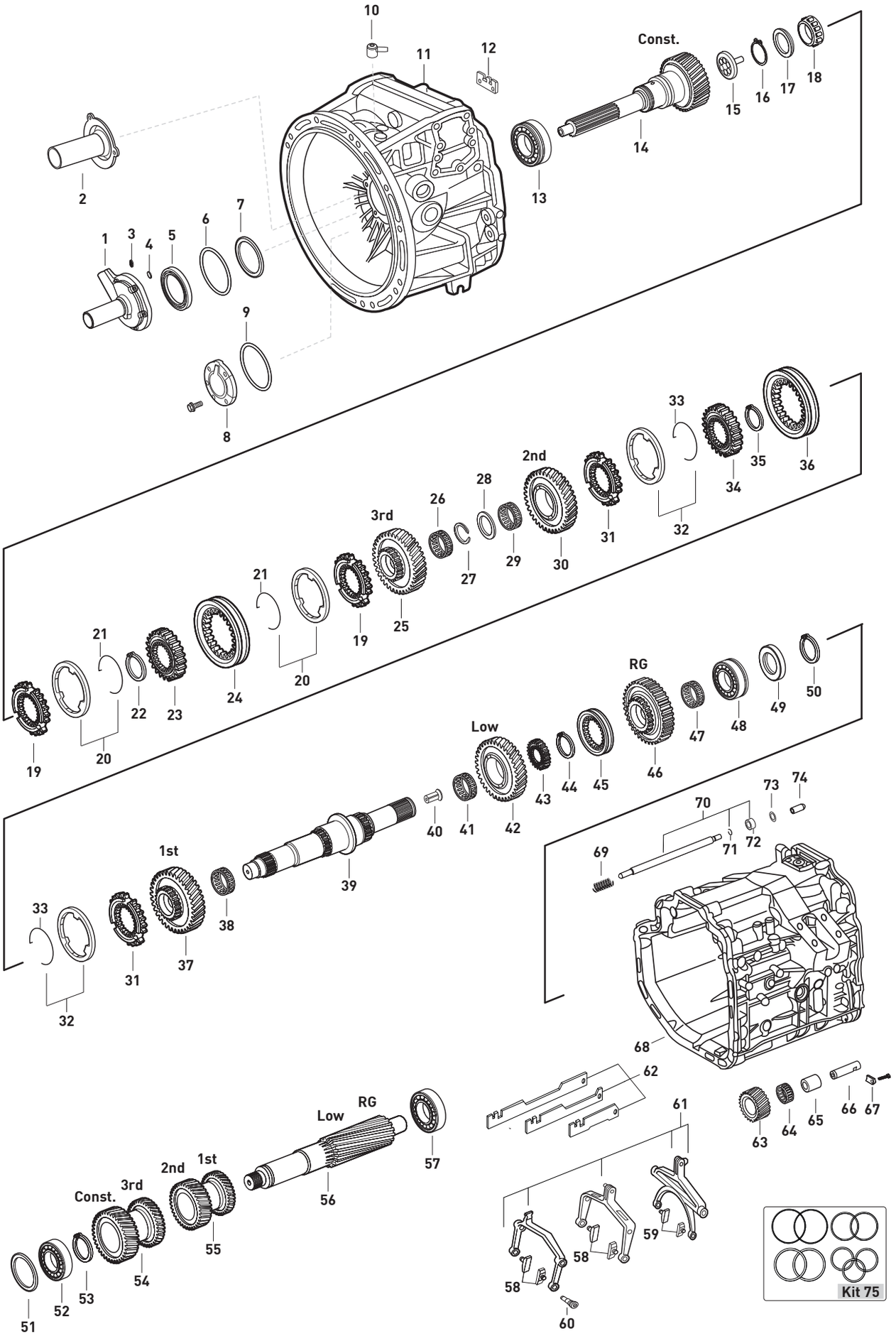




Original parts names, oem numbers, symbols and descriptions used in this catalogue are for reference purposes only.

| Fig. | Kacmaz No | Oem No | Oem Old No | Pcs. | Ürün Tanımı | Description | Sizes | Not | 715571 |
|---|---|---|---|---|---|---|---|---|---|
| 19 | K21.03314 | 945 262 7834 | (945 262 5734) | 2 | PRİZ.VE 3.VİTES SENKROMENÇ | ENGAGING RING | | (B) | ♦ |
| 20 | K21.03136 | 945 260 2245 | (946 262 6337) | 2 | PRİZ.VE 3.VİTES FRENLEME (Mo) | SYNCHRONIZING CONE / Mo | | (A)(B) | ♦ |
| 21 | K21.03044 | 387 262 1093 | (387 262 0693) | 2 | FRENLEME TELİ | SPRING | | | ♦ |
| | | | (960 262 1393) | | | | | | |
| 22 | K21.04361 | 976 262 0173 | | 1 | PRİZ./3.VİTES YILDIZ DİŞLİ SEKMANI | RETAINING RING | 2,00mm | | ♦ |
| 22 | K21.06956 | 976 262 0373 | | 1 | PRİZ./3.VİTES YILDIZ DİŞLİ SEKMANI | RETAINING RING | 2,10mm | | ♦ |
| 22 | K21.06957 | 976 262 0573 | | 1 | PRİZ./3.VİTES YILDIZ DİŞLİ SEKMANI | RETAINING RING | 2,20mm | | ♦ |
| 22 | K21.06958 | 976 262 0773 | | 1 | PRİZ./3.VİTES YILDIZ DİŞLİ SEKMANI | RETAINING RING | 2,30mm | | ♦ |
| 22 | K21.06959 | 976 262 3473 | | 1 | PRİZ./3.VİTES YILDIZ DİŞLİ SEKMANI | RETAINING RING | 2,40mm | | ♦ |
| 22 | K21.06960 | 976 262 3673 | | 1 | PRİZ./3.VİTES YILDIZ DİŞLİ SEKMANI | RETAINING RING | 2,50mm | | ♦ |
| 23 | K21.06595 | 947 262 2235 | | 1 | PRİZDİREK VE 3.VİTES YILDIZ DİŞLİ | SYNCHRONIZER HUB | | (A) | ♦ |
| 23 | K21.03316 | 947 262 0435 | | 1 | PRİZDİREK VE 3.VİTES YILDIZ DİŞLİ | SYNCHRONIZER HUB | | (B) | ♦ |
| 24 | K21.03137 | 945 262 6823 | (945 262 6423) | 1 | PRİZ.VE 3.VİTES HALKA | ENGAGING SLEEVE | | (A)(B) | ♦ |
| 25 | K21.03317 | 947 262 0613 | (947 262 0413) | 1 | 3.VİTES DİŞLİSİ 31 DİŞ | GEAR 3rd 31 T | | | ♦ |
| 26 | K21.03833 | 019 981 6010 | (019 981 5810) | 1 | 3.VİTES MASURA BİLYA | NEEDLE CAGE | 60X68X54mm | | ♦ |
| | | | (004 981 1218) | | | | | | |
| 27 | K21.06915 | 389 262 3273 | | 1 | 3.VİTES MASURA BİLYA SEKMANI | RETAINING RING | 2,40mm | | ♦ |
| 27 | K21.06914 | 389 262 3373 | | 1 | 3.VİTES MASURA BİLYA SEKMANI | RETAINING RING | 2,45mm | | ♦ |
| 27 | K21.06913 | 389 262 3473 | | 1 | 3.VİTES MASURA BİLYA SEKMANI | RETAINING RING | 2,50mm | | ♦ |
| 27 | K21.06912 | 389 262 3573 | | 1 | 3.VİTES MASURA BİLYA SEKMANI | RETAINING RING | 2,55mm | | ♦ |
| 27 | K21.06911 | 389 262 3673 | | 1 | 3.VİTES MASURA BİLYA SEKMANI | RETAINING RING | 2,60mm | | ♦ |
| 27 | K21.06910 | 389 262 3773 | | 1 | 3.VİTES MASURA BİLYA SEKMANI | RETAINING RING | 2,65mm | | ♦ |
| 27 | K21.06909 | 389 262 3873 | | 1 | 3.VİTES MASURA BİLYA SEKMANI | RETAINING RING | 2,70mm | | ♦ |
| 27 | K21.06908 | 389 262 3973 | | 1 | 3.VİTES MASURA BİLYA SEKMANI | RETAINING RING | 2,75mm | | ♦ |
| 28 | K21.04143 | 389 262 1862 | | 1 | 2./3.VİTES MASURA BİLYA PULU | THRUST WASHER | | | ♦ |
| 29 | K21.03834 | 021 981 5210 | (021 981 6510) | 1 | 2.VİTES MASURA BİLYA | NEEDLE CAGE | 60X76X42mm | | ♦ |
| | | | (021 981 5110) | | | | | | |
| | | | (021 981 6410) | | | | | | |
| 30 | K21.03319 | 947 262 0612 | (947 262 0412) | 1 | 2.VİTES DİŞLİSİ 36 DİŞ | GEAR 2nd 36 T. | | | ♦ |
| | | | (947 262 2912) | | | | | | |
| 31 | K21.03147 | 945 262 7734 | (945 262 3634) | 2 | 1./2.VİTES SENKROMENÇ | ENGAGING RING | | | ♦ |
| 32 | K21.03136 | 945 260 2245 | (946 262 6337) | 2 | 1./2.VİTES FRENLEME (Mo) | SYNCHRONIZING CONE / Mo | | | ♦ |
| 33 | K21.03044 | 387 262 1093 | (387 262 0693) | 2 | FRENLEME TELİ | SPRING | | | ♦ |
| | | | (960 262 1393) | | | | | | |
| 34 | K21.03321 | 947 262 0135 | | 1 | 1./2.VİTES YILDIZ DİŞLİ | SYNCHRONIZER HUB | | | ♦ |
| 35 | K21.06930 | 387 262 7873 | | 1 | 1./2.VİTES YILDIZ DİŞLİ SEKMANI | RETAINING RING | 2,80mm | | ♦ |
| 35 | K21.06669 | 387 262 7673 | | 1 | 1./2.VİTES YILDIZ DİŞLİ SEKMANI | RETAINING RING | 2,70mm | | ♦ |
| 35 | K21.06929 | 387 262 0973 | | 1 | 1./2.VİTES YILDIZ DİŞLİ SEKMANI | RETAINING RING | 2,65mm | | ♦ |
| 35 | K21.04337 | 387 262 0873 | | 1 | 1./2.VİTES YILDIZ DİŞLİ SEKMANI | RETAINING RING | 2,60mm | | ♦ |
| 35 | K21.07019 | 387 262 0773 | | 1 | 1./2.VİTES YILDIZ DİŞLİ SEKMANI | RETAINING RING | 2,55mm | | ♦ |
| 35 | K21.04352 | 387 262 0673 | | 1 | 1./2.VİTES YILDIZ DİŞLİ SEKMANI | RETAINING RING | 2,50mm | | ♦ |
| 35 | K21.07018 | 387 262 0573 | | 1 | 1./2.VİTES YILDIZ DİŞLİ SEKMANI | RETAINING RING | 2,45mm | | ♦ |
| 35 | K21.04336 | 387 262 0473 | | 1 | 1./2.VİTES YILDIZ DİŞLİ SEKMANI | RETAINING RING | 2,40mm | | ♦ |
| 36 | K21.03137 | 945 262 6823 | (945 262 6423) | 1 | 1./ 2.VİTES HALKA | ENGAGING SLEEVE | | | ♦ |
| 37 | K21.03322 | 947 262 1911 | (947 262 1611) | 1 | 1.VİTES DİŞLİSİ 40 DİŞ | GEAR 1st 40 T. | | | ♦ |
| 38 | K21.03817 | 019 981 4410 | (007 981 4210) | 1 | 2.VİTES MASURA BİLYA | NEEDLE CAGE | 75X83X55mm | | ♦ |
| | | | (008 981 8310) | | | | | | |
| | | | (009 981 0010) | | | | | | |
| 39 | K21.03324 | 947 262 0305 | | 1 | KAMALI MİL | MAIN SHAFT | | | ♦ |
| 40 | K21.04364 | 001 990 2759 | | 1 | KAMALI MİL YAĞ BORUSU | OIL PIPE | | | ♦ |
| 41 | K21.03827 | 013 981 1210 | (006 981 6410) | 1 | C.VİTES MASURA BİLYA | NEEDLE CAGE | 75X83X33mm | | ♦ |
| | | | (015 981 0210) | | | | | | |
| | | | (021 981 5710) | | | | | | |

NOTES :
Parts encoded alphabetic and numaric are used together.

NOTLAR :
Alfabetik ve rakam ile kodlanan parçalar birlikte kullanılır.





Original parts names, oem numbers, symbols and descriptions used in this catalogue are for reference purposes only.

# GEARBOX G 141- 9 / 14,57 - 1,0

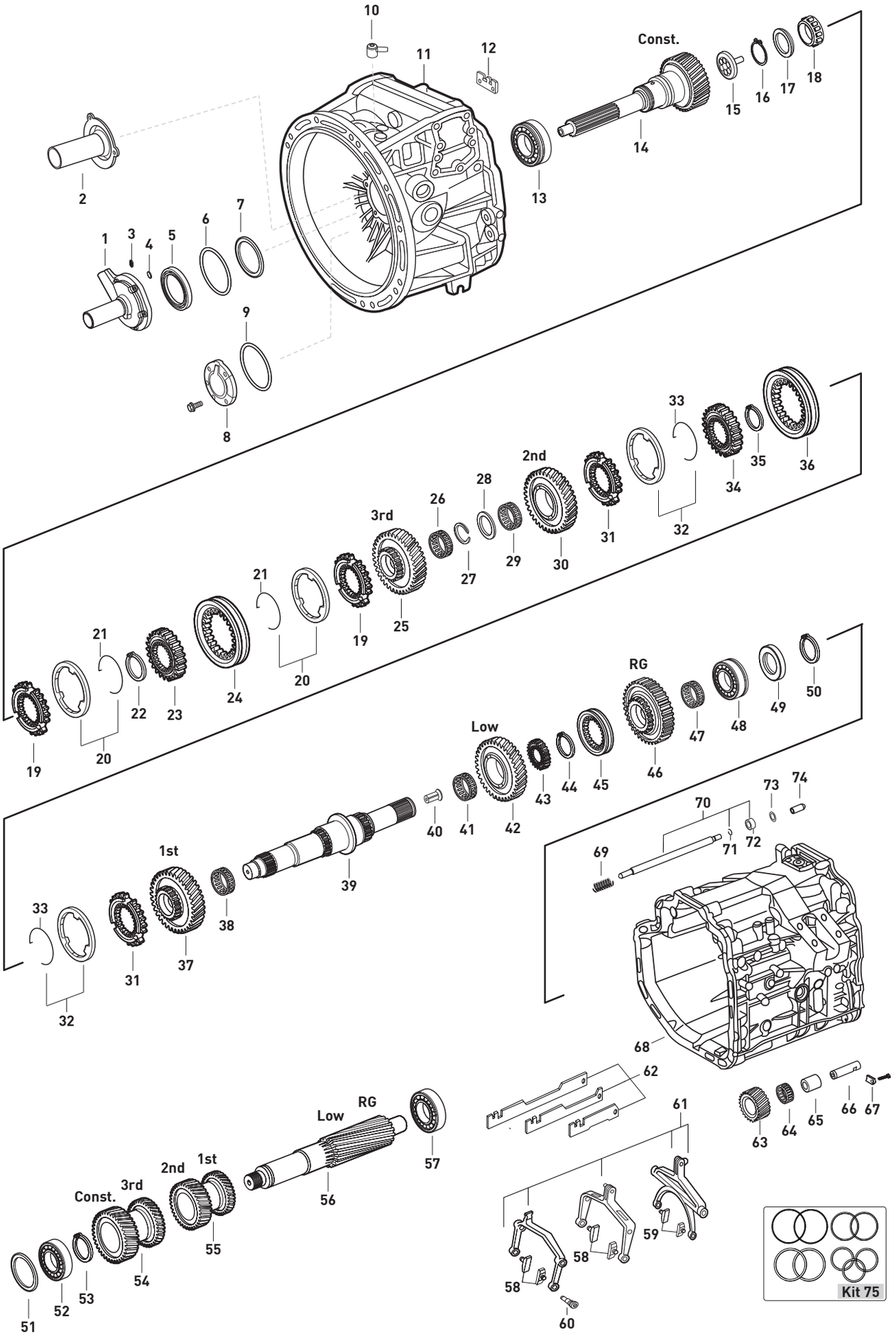




Original parts names, oem numbers, symbols and descriptions used in this catalogue are for reference purposes only.

| Fig. | Kacmaz No | Oem No | Oem Old No | Pcs. | Ürün Tanımı | Description | Sizes | Not | 715571 |
|---|---|---|---|---|---|---|---|---|---|
| 42 | K21.03325 | 947 262 1811 | (947 262 2411) | 1 | C VİTES DİŞLİSİ 41 DİŞ | GEAR CRAWLING GEAR 41 T. | | | ♦ |
| 43 | K21.03328 | 947 262 0735 | (947 262 0835) | 1 | GERİ VİTES YILDIZ DİŞLİ | SYNCHRONIZER HUB | | | ♦ |
| 44 | K21.06930 | 387 262 7873 | | 1 | R./C.VİTES YILDIZ DİŞLİ SEKMANI | RETAINING RING | 2,80mm | | ♦ |
| 44 | K21.06669 | 387 262 7673 | | 1 | R./C.VİTES YILDIZ DİŞLİ SEKMANI | RETAINING RING | 2,70mm | | ♦ |
| 44 | K21.06929 | 387 262 0973 | | 1 | R./C.VİTES YILDIZ DİŞLİ SEKMANI | RETAINING RING | 2,65mm | | ♦ |
| 44 | K21.04337 | 387 262 0873 | | 1 | R./C.VİTES YILDIZ DİŞLİ SEKMANI | RETAINING RING | 2,60mm | | ♦ |
| 44 | K21.07019 | 387 262 0773 | | 1 | R./C.VİTES YILDIZ DİŞLİ SEKMANI | RETAINING RING | 2,55mm | | ♦ |
| 44 | K21.04352 | 387 262 0673 | | 1 | R./C.VİTES YILDIZ DİŞLİ SEKMANI | RETAINING RING | 2,50mm | | ♦ |
| 44 | K21.07018 | 387 262 0573 | | 1 | R./C.VİTES YILDIZ DİŞLİ SEKMANI | RETAINING RING | 2,45mm | | ♦ |
| 44 | K21.04336 | 387 262 0473 | | 1 | R./C.VİTES YILDIZ DİŞLİ SEKMANI | RETAINING RING | 2,40mm | | ♦ |
| 45 | K21.03330 | 945 262 2023 | | 1 | GERİ VİTES HALKASI | ENGAGING SLEEVE | | | ♦ |
| 46 | K21.03331 | 947 262 0633 | (947 262 1133) | 1 | GERİ VİTES DİŞLİSİ 39 DİŞ | REVERSE GEAR 39 T. | | | ♦ |
| | | | (947 262 0433) | | | | | | |
| 47 | K21.03835 | 012 981 5410 | (021 981 6310) | 1 | GERİ VİTES MASURA BİLYA | NEEDLE CAGE | 65X73X30mm | | ♦ |
| | | | (004 981 1318) | | | | | | |
| 48 | K21.03653 | 016 981 0105 | (016 981 0005) | 1 | KAMALI MİL ARKA BİLYA | ROLLER BEARING | 55X130X27,25mm | | ♦ |
| | | | (016 981 0205) | | | | | | |
| | | | (016 981 0305) | | | | | | |
| | | | (016 981 1605) | | | | | | |
| 49 | K21.04133 | 947 262 0152 | | 1 | GÜNEŞ DİŞLİ PULU | THRUST WASHER | | | ♦ |
| 50 | K21.04354 | 000471 050000 | | 1 | KAMALI MİL ARKA BİLYA SEKMANI | RETAINING RING | 50X2mm | | ♦ |
| 51 | K21.04192 | 406 337 0252 | | 1 | GRUP MİLİ ÖN BİLYA RAYNELİ | THRUST WASHER | 0,10mm | | ♦ |
| 51 | K21.04150 | 406 337 0352 | | 1 | GRUP MİLİ ÖN BİLYA RAYNELİ | THRUST WASHER | 0,20mm | | ♦ |
| 51 | K21.94150 | | | 1 | GRUP MİLİ ÖN BİLYA RAYNELİ | THRUST WASHER | 0,25mm | | ♦ |
| 51 | K21.04338 | 406 337 0452 | | 1 | GRUP MİLİ ÖN BİLYA RAYNELİ | THRUST WASHER | 0,30mm | | ♦ |
| 51 | K21.04196 | 389 263 5352 | (389 263 3252) | 1 | GRUP MİLİ ÖN BİLYA RAYNELİ | THRUST WASHER | 0,40mm | | ♦ |
| 51 | K21.04194 | 389 263 3352 | | 1 | GRUP MİLİ ÖN BİLYA RAYNELİ | THRUST WASHER | 0,45mm | | ♦ |
| 51 | K21.06719 | 389 263 5652 | | 1 | GRUP MİLİ ÖN BİLYA RAYNELİ | THRUST WASHER | 0,49mm | | ♦ |
| 51 | K21.04197 | 389 263 5852 | (389 263 3552) | 1 | GRUP MİLİ ÖN BİLYA RAYNELİ | THRUST WASHER | 0,55mm | | ♦ |
| 51 | K21.04340 | 389 263 6052 | | 1 | GRUP MİLİ ÖN BİLYA RAYNELİ | THRUST WASHER | 0,61mm | | ♦ |
| 51 | K21.04198 | 389 263 6352 | (389 263 3852) | 1 | GRUP MİLİ ÖN BİLYA RAYNELİ | THRUST WASHER | 0,70mm | | ♦ |
| 51 | K21.04154 | 389 263 3952 | | 1 | GRUP MİLİ ÖN BİLYA RAYNELİ | THRUST WASHER | 0,75mm | | ♦ |
| 51 | K21.04199 | 389 263 6852 | | 1 | GRUP MİLİ ÖN BİLYA RAYNELİ | THRUST WASHER | 0,85mm | | ♦ |
| 51 | K21.04200 | 389 263 7352 | | 1 | GRUP MİLİ ÖN BİLYA RAYNELİ | THRUST WASHER | 1,00mm | | ♦ |
| 51 | K21.04201 | 389 263 7852 | | 1 | GRUP MİLİ ÖN BİLYA RAYNELİ | THRUST WASHER | 1,15mm | | ♦ |
| 51 | K21.04202 | 389 263 8352 | | 1 | GRUP MİLİ ÖN BİLYA RAYNELİ | THRUST WASHER | 1,30mm | | ♦ |
| 52 | K21.03606 | 015 981 9005 | (014 981 1405) | 1 | GRUP MİLİ ÖN BİLYA | ROLLER BEARING | 50,8X100X35mm | | ♦ |
| | | | (012 981 7405) | | | | | | |
| | | | (012 981 5105) | | | | | | |
| 53 | K21.04355 | 000471 058000 | | 1 | GRUP MİLİ ÖN BİLYA SEKMANI | RETAINING RING | | | ♦ |
| 54 | K21.03336 | 947 263 0513 | (947 263 0413) | 1 | PRİZ.VE 3.VİT.DİŞ.KARŞILIĞI 32/38 DİŞ | DOUBLE GEAR Const./3rd 32/38 T. | | | ♦ |
| 55 | K21.06248 | 947 263 0111 | | 1 | 1./2.VİT.DİŞ.KARŞILIĞI 21/27 DİŞ | DOUBLE GEAR 1st/2nd 21/27 T. | | | ♦ |
| 56 | K21.03339 | 947 263 0702 | | 1 | GRUP MİLİ 14 DİŞ | COUNTER SHAFT 14 T. | | | ♦ |
| 57 | K21.03647 | 015 981 9705 | (015 981 9605) | 1 | GRUP MİLİ ARKA BİLYA | ROLLER BEARING | 60X110X29,75mm | | ♦ |
| 58 | K21.03431 | 960 265 0049 | (947 265 0349) | 4 | PRİZ./3./2./1.VİTES HİLAL PABUCU | SLIDING PAD | | | ♦ |
| | | | (389 265 2749) | | | | | | |
| 59 | K21.03474 | 947 265 0649 | (947 265 0149) | 2 | GERİ VİTES HİLAL PABUCU | SLIDING PAD | | | ♦ |
| 60 | K21.04307 | 960 265 0774 | (945 265 1274) | 2 | HİLAL CİVATASI | PIN | | | ♦ |
| | | | (945 265 2974) | | | | | | |
| | | | (945 265 2774) | | | | | | |
| 61 | | 947 260 3630 | | Kit | VİTES HİLAL TAKIMI | REPAIR KIT | | | ♦ |
| 62 | | 960 260 0731 | | Kit | VİTES HİLAL ÇITA TAKIMI | REPAIR KIT | | | ♦ |
| 63 | K21.06997 | 947 263 1931 | (947 263 2031) | 1 | KÜÇÜK GERİ VİTES DİŞLİSİ 18 DİŞ | REVERSE IDLER GEAR 18 T. | | (1) | ♦ |

NOTES :
Parts encoded alphabetic and numaric are used together.

NOTLAR :
Alfabetik ve rakam ile kodlanan parçalar birlikte kullanılır.





Original parts names, oem numbers, symbols and descriptions used in this catalogue are for reference purposes only.

# GEARBOX G 141- 9 / 14,57 - 1,0

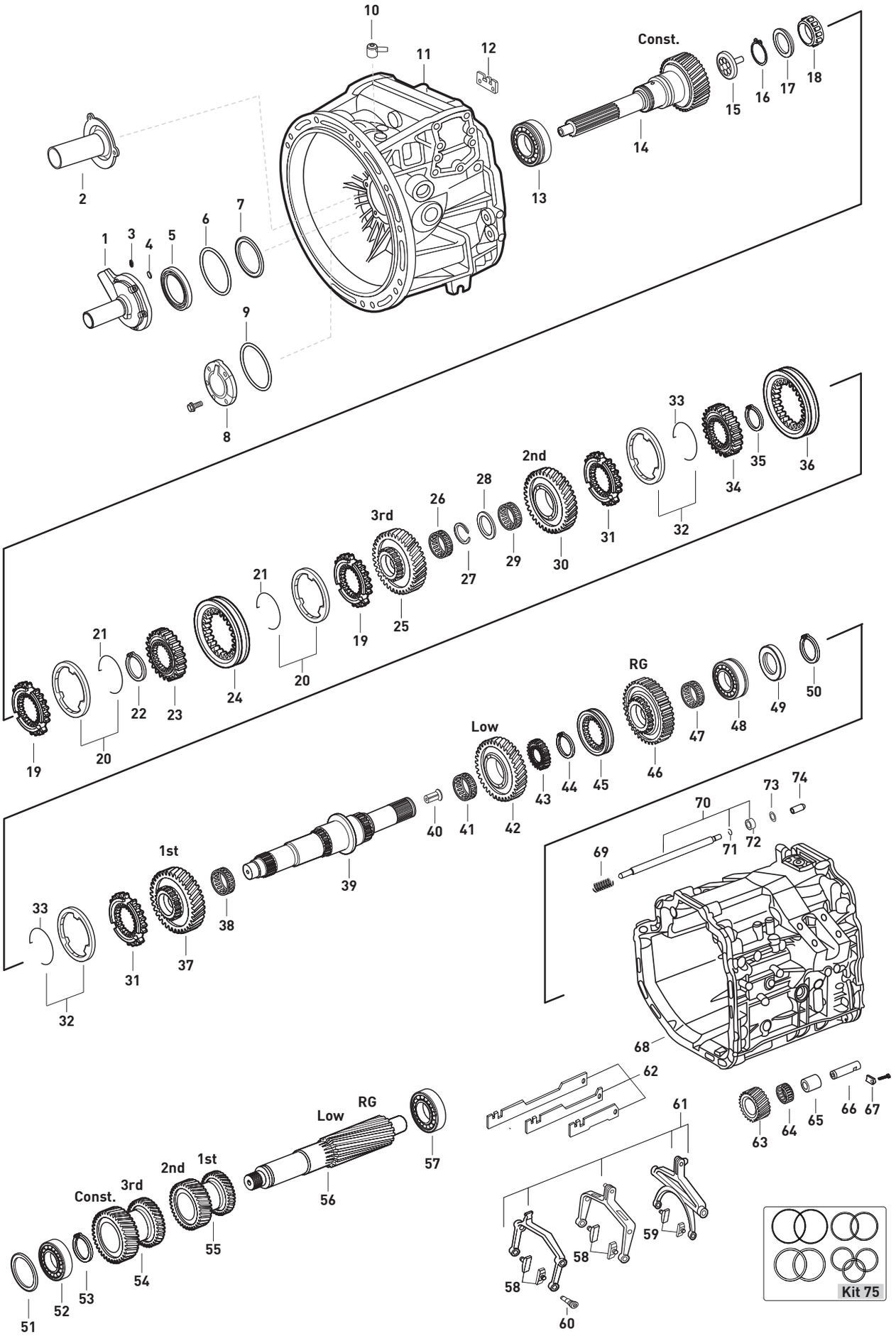




Original parts names, oem numbers, symbols and descriptions used in this catalogue are for reference purposes only.

| Fig. | Kacmaz No | Oem No | Oem Old No | Pcs. | Ürün Tanımı | Description | Sizes | Not | 715571 |
|---|---|---|---|---|---|---|---|---|---|
| 63 | K21.06068 | 947 263 0731 | | 1 | KÜÇÜK GERİ VİTES DİŞLİSİ 18 DİŞ | REVERSE IDLER GEAR 18 T. | | (2) | ♦ |
| 64 | | 023 981 3110 | (003 981 2818) | 1 | KÜÇÜK GERİ VİTES MASURA BİLYA | NEEDLE CAGE | 40X50X42mm | (1) | ♦ |
| | | | (004 981 1518) | | | | | | |
| 64 | K21.03843 | 021 981 5610 | (021 981 2010) | 1 | KÜÇÜK GERİ VİTES MASURA BİLYA | NEEDLE CAGE | 42X50X40mm | (2) | ♦ |
| 65 | K21.06495 | 947 992 0103 | | 1 | KÜÇÜK GERİ VİTES MAS.BİLYA ÇANAĞI | BUSHING | | (1) | ♦ |
| 65 | K21.06069 | 947 263 0050 | | 1 | KÜÇÜK GERİ VİTES MAS.BİLYA ÇANAĞI | BUSHING | | (2) | ♦ |
| 66 | K21.06037 | 976 263 0030 | (976 263 1230) | 1 | KÜÇÜK GERİ VİTES PİMİ | PIN | | | ♦ |
| 67 | K21.07010 | 945 263 0041 | | 1 | KÜÇÜK GERİ VİTES PİM KİLİTLEMESİ | KEY | | | ♦ |
| 68 | | 947 261 0326 | | 1 | ŞANZIMAN ORTA GÖVDE | HOUSING | | (1) | ♦ |
| 68 | | 947 261 2003 | | 1 | ŞANZIMAN ORTA GÖVDE | HOUSING | | (2) | ♦ |
| 69 | | 389 993 0501 | | 1 | KİLİTLEME MİL YAYI | SPRING | | | ♦ |
| 70 | | 947 268 0525 | | 1 | KİLİTLEME MİLİ | SHIFTING ROD | | | ♦ |
| 71 | | 007993 012200 | | 1 | KİLİTLEME MİLİ SEKMANI | RETAINING RING | | | ♦ |
| 72 | | 389 268 0051 | | 1 | KİLİTLEME MİL BURCU | SPACER RING | | | ♦ |
| 73 | | 000998 006019 | | 1 | KİLİTLEME MİLİ AYAR RAYNELİ | FITTED WASHER | 0,10mm | | ♦ |
| 73 | | 000998 006020 | | 1 | KİLİTLEME MİLİ AYAR RAYNELİ | FITTED WASHER | 0,20mm | | ♦ |
| 73 | | 000988 006021 | | 1 | KİLİTLEME MİLİ AYAR RAYNELİ | FITTED WASHER | 0,30mm | | ♦ |
| 73 | | 000988 006013 | | 1 | KİLİTLEME MİLİ AYAR RAYNELİ | FITTED WASHER | 0,50mm | | ♦ |
| 73 | | 000988 006001 | | 1 | KİLİTLEME MİLİ AYAR RAYNELİ | FITTED WASHER | 1,00mm | | ♦ |
| 74 | K21.03489 | 389 268 0674 | | 1 | KİLİTLEME MİL FİŞEĞİ | PIN | | | ♦ |
| 75 | K21.06996 | | | Kit | RAYNEL TAKIMI | SHIM KIT | | | ♦ |

NOTES :
Parts encoded alphabetic and numaric are used together.

NOTLAR :
Alfabetik ve rakam ile kodlanan parçalar birlikte kullanılır.





Original parts names, oem numbers, symbols and descriptions used in this catalogue are for reference purposes only.

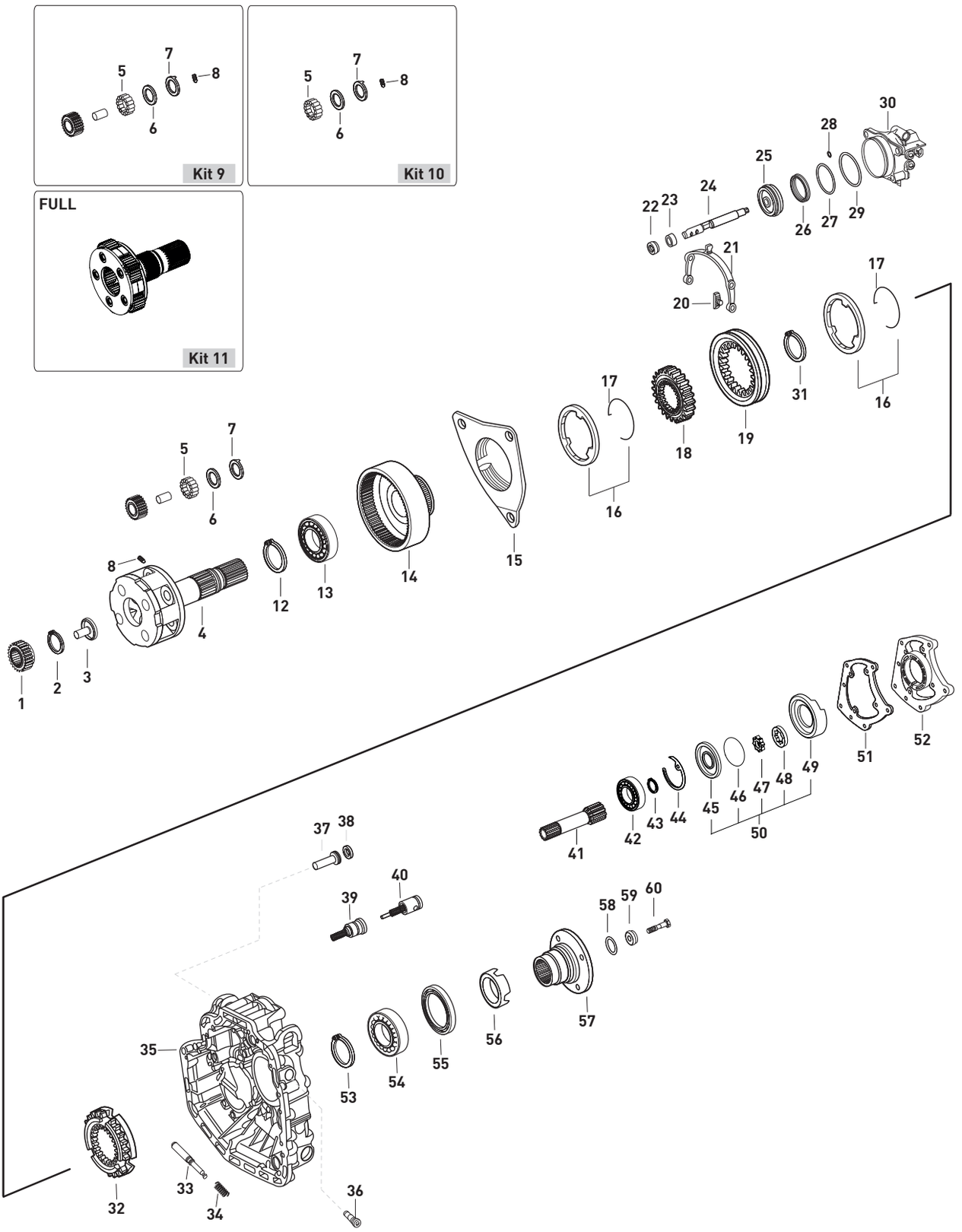






Original parts names, oem numbers, symbols and descriptions used in this catalogue are for reference purposes only.

| Fig. | Kacmaz No | Oem No | Oem Old No | Pcs. | Ürün Tanımı | Description | Sizes | Not | 715571 |
|---|---|---|---|---|---|---|---|---|---|
| 1 | K21.03334 | 947 262 0709 | (947 262 0809) | 1 | GÜNEŞ DİŞLİSİ 30 DİŞ | SUN GEAR 30 T. | | | ♦ |
| 2 | K21.04115 | 000472 060000 | | 1 | HEYKEL YAĞ PİPET SEKMANI | SNAP RING | 2,00mm | | ♦ |
| 3 | K21.03435 | 945 269 0834 | (389 269 4734) | 1 | ŞANZIMAN HEYKELİ YAĞ PİPETİ | OIL TUBE | | | ♦ |
| 4 | K21.03341 | 947 260 9361 | (947 260 1961) | 1 | ŞANZIMAN HEYKELİ (BOŞ) | PLANETARY CARRIER (EMPTY) | | | ♦ |
| | | | (947 260 4561) | | | | | | |
| 5 | K21.03844 | 000 981 6186 | (000 981 5886) | 100 | HEYKEL KOZA DİŞLİ TANE BİLYA | NEEDLE ROLLER | D5X32,7 | | ♦ |
| 6 | K21.04074 | 389 262 0162 | (389 262 6462) | 8 | HEYKEL KOZA DİŞLİ PULU | THRUST WASHER | | | ♦ |
| | | | (389 262 0562) | | | | | | |
| 7 | K21.04280 | 947 262 0262 | (947 262 0362) | 8 | HEYKEL KOZA DİŞLİ PULU | THRUST WASHER | | | ♦ |
| 8 | K21.03418 | 000914 006109 | | 4 | HEYKEL KOZA DİŞLİ VİDASI | THREADED PIN | M6X14 | | ♦ |
| 9 | K21.03340 | 947 260 0097 | | Kit | HEYKEL KOZA DİŞLİ TAKIMI | PLANETARY GEAR SET | | | ♦ |
| 10 | K21.06344 | | | Kit | HEYKEL BİLYA VE PUL TAKIMI | WASHER KIT | | | ♦ |
| 11 | K21.03685 | | | Kit | ŞANZIMAN HEYKELİ (DOLU) | PLANETARY CARRIER (FULL) | | | ♦ |
| 12 | K21.04353 | 000472 110000 | | 1 | ÇEMBER DİŞLİ BİLYA SEKMANI | RETAINING RING | 110X4mm | | ♦ |
| 13 | K21.03649 | 008 981 9525 | (008 981 9925) | 1 | ÇEMBER DİŞLİ BİLYASI | ROLLER BEARING | 70X110X20mm | | ♦ |
| | | | (008 981 9625) | | | | | | |
| | | | (008 981 9725) | | | | | | |
| | | | (008 981 9825) | | | | | | |
| | | | (010 981 4501) | | | | | | |
| 14 | K21.03479 | 947 262 1208 | (947 262 1308) | 1 | PLANET ÇEMBER DİŞLİ 80 DİŞ | CROWN GEAR 80 T. | | | ♦ |
| | | | (947 262 1108) | | | | | | |
| | | | (400 262 0108) | | | | | | |
| 15 | K21.03305 | 947 260 0736 | | 1 | TABLA SENKROMENÇ | FOLLOWER RING | | | ♦ |
| 16 | K21.03185 | 947 260 0945 | | 2 | AĞIR SERİ FRENLEME (Mo) | SYNCHRONIZING CONE / Mo | | | ♦ |
| 16 | K21.06273 | 947 260 3045 | | 2 | AĞIR SERİ FRENLEME (C) | SYNCHRONIZING CONE / C | | | ♦ |
| 17 | K21.03077 | 389 262 0293 | | 2 | FRENLEME TELİ | SPRING | | | ♦ |
| 18 | K21.03079 | 389 262 4935 | (389 262 2035) | 1 | AĞIR SERİ YILDIZ DİŞLİ 73 DİŞ | SYNCHRONIZER HUB 73 T. | | | ♦ |
| 19 | K21.03033 | 945 262 6923 | (930 262 0623) | 1 | AĞIR SERİ HALKA | ENGAGING SLEEVE | | | ♦ |
| 20 | K21.03431 | 960 265 0049 | (947 265 0349) | 2 | AĞIR SERİ HİLAL PABUCU | SLIDING PAD | | | ♦ |
| | | | (389 265 2749) | | | | | | |
| 21 | K21.06324 | 947 265 1901 | (947 265 0901) | 1 | AĞIR SERİ HİLALİ | SHIFTING FORK | | | ♦ |
| 22 | K21.03523 | 000 267 0197 | (000 267 0397) | 1 | AĞIR SERİ HİLAL MİL KEÇESİ | OIL SEAL | 22X32X8mm | | ♦ |
| 23 | K21.04178 | 387 267 0650 | (387 267 0250) | 1 | AĞIR SERİ HİLAL MİL BURCU | BUSHING | 34x22x8mm | | ♦ |
| 24 | | 945 267 2117 | (389 267 7317) | 1 | AĞIR SERİ HİLAL MİLİ | SHIFTING ROD | | | ♦ |
| 25 | K21.06975 | 960 267 0818 | (389 267 1018) | 1 | AĞIR SERİ HİLAL MİL PİSTONU | PISTON | | | ♦ |
| | | | (389 267 0118 | | | | | | |
| 26 | K21.03525 | 024 997 8347 | (020 997 6747) | 1 | AĞIR SERİ SİLİNDİR KEÇESİ | SEAL RING | 77X90X17mm | | ♦ |
| | | | (014 997 3647) | | | | | | |
| | | | (014 997 5147) | | | | | | |
| 27 | K21.06399 | 013 997 7548 | | 1 | AĞIR SERİ SİLİNDİR ORİNGİ | O-RING | 89,5X3mm | | ♦ |
| 28 | K21.06636 | 015 997 4048 | (020 997 8748) | 1 | AĞIR SERİ SİLİNDİR ORİNGİ | O-RING | 5X3mm | | ♦ |
| 29 | K21.06968 | 017 997 6545 | | 1 | AĞIR SERİ SİLİNDİR ORİNGİ | O-RING | 96X1,5mm | | ♦ |
| 30 | | 945 260 3763 | | 1 | AĞIR SERİ SİLİNDİRİ | SHIFING CYLINDER | | | ♦ |
| 31 | K21.04356 | 000471 120000 | | 1 | AĞIR SERİ YILDIZ DİŞLİ SEKMANI | RETAINING RING | | | ♦ |
| 32 | K21.03038 | 947 262 0334 | | 1 | SERİ SENKROMENÇ | ENGAGING RING | | | ♦ |
| 33 | K21.03486 | 389 267 0974 | | 1 | AĞIR SERİ KİLİTLEME MİLİ | PIN | | | ♦ |
| 34 | K21.06006 | 389 993 3401 | (389 993 0601) | 1 | AĞIR SERİ KİLİTLEME YAYI | SPRING | | | ♦ |
| 35 | | 960 260 8611 | | 1 | ŞANZIMAN ARKA GÖVDE | HOUSING | | | ♦ |
| 36 | K21.04307 | 960 265 0774 | (945 265 1274) | 2 | HİLAL CİVATASI | PIN | | | ♦ |
| | | | (945 265 2974) | | | | | | |
| | | | (945 265 2774) | | | | | | |
| 37 | K21.06979 | 389 265 0176 | (389 265 0076) | 1 | YAĞ BASINÇ VALFİ ALIN FİBERİ | WASHER | | | ♦ |
| 38 | K21.04212 | 013 997 0048 | (020 997 8248) | 1 | YAĞ BASINÇ VALF ORİNGİ | O-RING | 19,2X3mm | | ♦ |
| 39 | K21.06988 | 960 260 2257 | | Kit | YAĞ BASINÇ VALFİ KOMPLE | VALVE KIT | | | ♦ |
| 40 | K21.06989 | 960 260 2157 | (960 260 3757) | Kit | YAĞ BASINÇ VALFİ KOMPLE | VALVE KIT | | | ♦ |
| 41 | K21.03198 | 947 269 1010 | (945 269 1010) | 1 | YAĞ POMPA MİLİ | OIL PUMP SHAFT | | | ♦ |
| 41 | K21.06298 | 947 269 1110 | (945 269 1110) | 1 | YAĞ POMPA MİLİ | OIL PUMP SHAFT | | | ♦ |

NOTES :

NOTLAR :





Original parts names, oem numbers, symbols and descriptions used in this catalogue are for reference purposes only.

# GEARBOX G 141 - 9 / 14,57 - 1,0

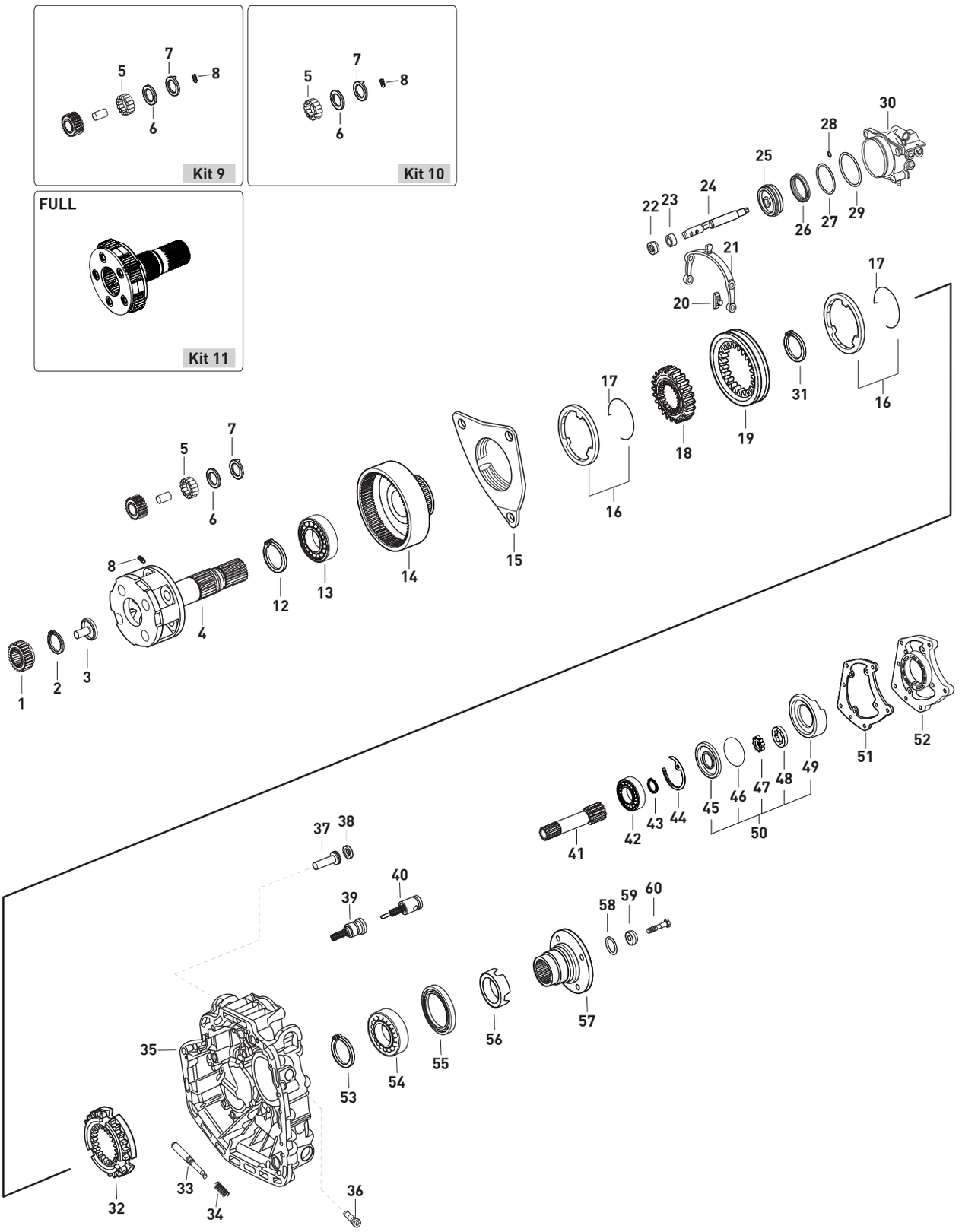




Original parts names, oem numbers, symbols and descriptions used in this catalogue are for reference purposes only.

| Fig. | Kacmaz No | Oem No | Oem Old No | Pcs. | Ürün Tanımı | Description | Sizes | Not | 715571 |
|---|---|---|---|---|---|---|---|---|---|
| 42 | K21.03648 | 010 981 9025 | (010 981 8425) | 1 | PTO MİL BİLYASI | ROLLER BEARING | 17X35X10mm | | ♦ |
| | | | (008 981 5425) | | | | | | |
| | | | (008 981 3425) | | | | | | |
| | | | (400 981 2525) | | | | | | |
| 43 | | 912009 045100 | | 1 | PTO MİL BİLYA SEKMANI | RETAINING RING | 1,5mm | | ♦ |
| 44 | K21.94304 | | | 1 | YAĞ POMPA PULU | SPACER WASHER | 0,70mm | | ♦ |
| 44 | K21.04304 | 389 262 6254 | | 1 | YAĞ POMPA PULU | SPACER WASHER | 0,80mm | | ♦ |
| 44 | K21.04303 | 389 262 5954 | | 1 | YAĞ POMPA PULU | SPACER WASHER | 0,90mm | | ♦ |
| 44 | K21.04302 | 389 262 5754 | | 1 | YAĞ POMPA PULU | SPACER WASHER | 1,00mm | | ♦ |
| 44 | K21.04301 | 389 262 5554 | | 1 | YAĞ POMPA PULU | SPACER WASHER | 1,10mm | | ♦ |
| 44 | K21.04305 | 389 262 5354 | | 1 | YAĞ POMPA PULU | SPACER WASHER | 1,20mm | | ♦ |
| 45 | K21.03412 | 945 269 0201 | (389 269 2501) | 1 | YAĞ POMPA KAPAĞI | OIL PUMP COVER | | | ♦ |
| 46 | K21.03511 | 029 997 5748 | | 1 | YAĞ POMPA ORİNGİ | O-RING | 112X2,5mm | | ♦ |
| 47 | K21.03413 | 389 269 1406 | (389 269 1506) | 1 | YAĞ POMPA İÇ ROTOR | OIL PUMP GEAR | | | ♦ |
| | | | (945 260 0090) | | | | | | |
| 48 | K21.03414 | 389 269 0706 | (389 269 1206) | 1 | YAĞ POMPA DIŞ ROTOR | ROTOR | | | ♦ |
| 49 | K21.03478 | 947 269 1001 | | 1 | YAĞ POMPA GÖVDESİ | OIL PUMP HOUSING | | | ♦ |
| 50 | K21.03475 | 389 260 0790 | | 1 | YAĞ POMPASI | OIL PUMP | | | ♦ |
| 51 | K21.03667 | 945 261 0680 | (945 261 0580) | 1 | PTO KAPAK CONTASI | GASKET | | | ♦ |
| | | | (945 261 0080) | | | | | | |
| 52 | K21.03566 | 945 261 1033 | (945 261 1433) | 1 | PTO KAPAĞI | COVER | | | ♦ |
| | | | (400 261 1133) | | | | | | |
| 53 | K21.06863 | 000472 120000 | | 1 | ŞANZIMAN HEYKEL BİLYA SEKMANI | RETAINING RING | | | ♦ |
| 54 | K21.03650 | 010 981 9125 | (009 981 0325) | 1 | ŞANZIMAN ARKA BİLYA | ROLLER BEARING | 65X120X23mm | | ♦ |
| | | | (009 981 0425) | | | | | | |
| | | | (009 981 0025) | | | | | | |
| | | | (009 981 0125) | | | | | | |
| | | | (009 981 0225) | | | | | | |
| 55 | K21.03519 | 023 997 8847 | (023 997 8547) | 1 | ŞANZIMAN ARKA KEÇE | OIL SEAL | 80X100X15,5mm | | ♦ |
| | | | (020 997 6447) | | | | | | |
| 56 | K21.04144 | 387 262 0928 | | 1 | ŞANZIMAN KM DEVİR SACI | PULSE STAR | | | |
| 57 | K21.03346 | 947 262 0445 | | 1 | ŞANZIMAN FLANŞI | COMPANION FLANGE | 4-H, Ø180mm | | ♦ |
| 57 | | 947 262 0345 | (976 262 0345) | 1 | ŞANZIMAN FLANŞI | COMPANION FLANGE | 4-H, Ø150mm | | ♦ |
| 58 | K21.06990 | 027 997 3048 | (023 997 5548) | 1 | ŞANZIMAN FLANŞ ORİNGİ | O-RING | 56,52X5,33mm | | ♦ |
| | | | (023 997 6048) | | | | | | |
| 59 | | 976 262 0362 | (976 262 0162) | 1 | ŞANZ.FLANŞI ALIN PULU | THRUST WASHER | | | ♦ |
| 60 | | 000000 000963 | | 1 | ŞANZ.FLANŞI ALIN VİDASI | SCREW | M20X1,5X80mm | | ♦ |

NOTES :

NOTLAR :





Original parts names, oem numbers, symbols and descriptions used in this catalogue are for reference purposes only.

SYNCHRONIZER KIT Const./3rd
NEW MODEL

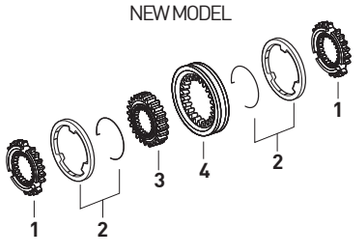


| Fig. | Kacmaz No. | Oem No | Oem Old No | Pcs. | Ürün Tanımı | Description |
|---|---|---|---|---|---|---|
| | K21.06856 | | | Kit | PRİZ./3.VİTES SENK.KİT | SYNCH.KIT Const./3rd |
| 1 | K21.03147 | 945 262 7734 | (945 262 3634) | 2 | PRİZ./3.VİTES SENKROMENÇ | ENGAGING RING |
| 2 | K21.03136 | 945 260 2245 | (946 262 6337) | 2 | PRİZ./3.VİT.FRENLEME (Mo) | SYNCHRONIZING CONE / Mo |
| 3 | K21.06595 | 947 262 2235 | | 1 | PRİZ./3.VİTES YILDIZ DİŞLİ | SYNCHRONIZER HUB |
| 4 | K21.03137 | 945 262 6823 | (945 262 6423) | 1 | PRİZ./3.VİTES HALKA | ENGAGING SLEEVE |

SYNCHRONIZER KIT 1st/2nd
NEW MODEL

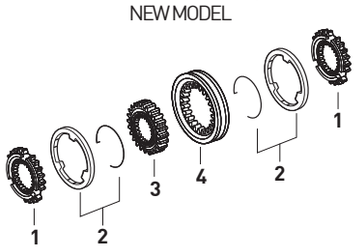


| Fig. | Kacmaz No. | Oem No | Oem Old No | Pcs. | Ürün Tanımı | Description |
|---|---|---|---|---|---|---|
| | K21.06198 | | | Kit | PRİZ./3.VİTES SENK.KİT | SYNCH.KIT Const./3rd |
| 1 | K21.03314 | 945 262 7834 | (945 262 5734) | 2 | PRİZ./3.VİTES SENKROMENÇ | ENGAGING RING |
| 2 | K21.03136 | 945 260 2245 | (946 262 6337) | 2 | PRİZ./3.VİT.FRENLEME (Mo) | SYNCHRONIZING CONE / Mo |
| 3 | K21.03316 | 947 262 0435 | | 1 | PRİZ./3.VİTES YILDIZ DİŞLİ | SYNCHRONIZER HUB |
| 4 | K21.03137 | 945 262 6823 | (945 262 6423) | 1 | PRİZ./3.VİTES HALKA | ENGAGING SLEEVE |

SYNCHRONIZER KIT PLANETARY
NEW MODEL

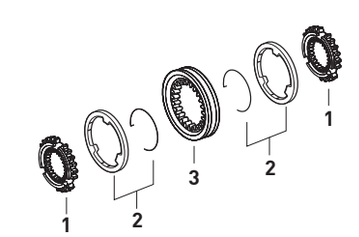


| Fig. | Kacmaz No. | Oem No | Oem Old No | Pcs. | Ürün Tanımı | Description |
|---|---|---|---|---|---|---|
| | K21.06521 | | | Kit | PRİZ./3.VİTES SENK.KİT | SYNCH.KIT Const./3rd |
| 1 | K21.03314 | 945 262 7834 | (945 262 5734) | 2 | PRİZ./3.VİTES SENKROMENÇ | ENGAGING RING |
| 2 | K21.03136 | 945 260 2245 | (946 262 6337) | 2 | PRİZ./3.VİT.FRENLEME (Mo) | SYNCHRONIZING CONE / Mo |
| 3 | K21.03137 | 945 262 6823 | (945 262 6423) | 1 | PRİZ./3.VİTES HALKA | ENGAGING SLEEVE |

SYNCHRONIZER KIT 1st/2nd
NEW MODEL

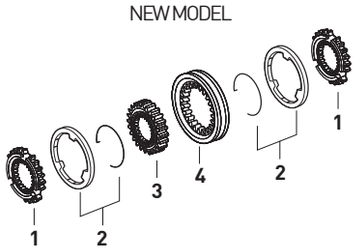


| Fig. | Kacmaz No. | Oem No | Oem Old No | Pcs. | Ürün Tanımı | Description |
|---|---|---|---|---|---|---|
| | K21.06201 | | | Kit | 1./2.VİT.SENKROMENÇ KİT | SYNCH.KIT 1st/2nd |
| 1 | K21.03147 | 945 262 7734 | (945 262 3634) | 2 | 1./2.VİTES SENKROMENÇ | ENGAGING RING |
| 2 | K21.03136 | 945 260 2245 | (946 262 6337) | 2 | 1./2.VİTES FRENLEME (Mo) | SYNCHRONIZING CONE / Mo |
| 3 | K21.03321 | 947 262 0135 | | 1 | 1./2.VİTES YILDIZ DİŞLİ | SYNCHRONIZER HUB |
| 4 | K21.03137 | 945 262 6823 | (945 262 6423) | 1 | 1./2.VİT.SENKROMENÇ HALKA | ENGAGING SLEEVE |

SYNCHRONIZER KIT PLANETARY
NEW MODEL

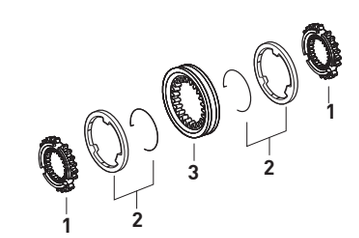


| Fig. | Kacmaz No. | Oem No | Oem Old No | Pcs. | Ürün Tanımı | Description |
|---|---|---|---|---|---|---|
| | K21.06523 | | | Kit | 1./2.VİT.SENKROMENÇ KİT | SYNCH.KIT 1st/2nd |
| 1 | K21.03147 | 945 262 7734 | (945 262 3634) | 2 | 1./2.VİTES SENKROMENÇ | ENGAGING RING |
| 2 | K21.03136 | 945 260 2245 | (946 262 6337) | 2 | 1./2.VİTES FRENLEME (Mo) | SYNCHRONIZING CONE / Mo |
| 3 | K21.03137 | 945 262 6823 | (945 262 6423) | 1 | 1./2.VİT.SENKROMENÇ HALKA | ENGAGING SLEEVE |



**Original parts names, oem numbers, symbols and descriptions used in this catalogue are for reference purposes only.**

| Fig. | Kacmaz No. | Oem No | Oem Old No | Pcs. | Ürün Tanımı | Description |
|---|---|---|---|---|---|---|
| | K21.06203 | | | Kit | AĞIR SERİ SENK.KİT | SYNCH.KIT PLANETARY |
| 1 | K21.03305 | 947 260 0736 | | 1 | TABLA SENKROMENÇ | FOLLOWER RING |
| 2 | K21.03185 | 947 260 0945 | | 2 | AĞIR SERİ FRENLEME (Mo) | SYNCHRONIZING CONE/Mo |
| 3 | K21.03079 | 389 262 4935 | (389 262 2035) | 1 | A.SERİ YILDIZ DİŞLİ 73 DİŞ | SYNCHRONIZER HUB 73 T. |
| 4 | K21.03033 | 945 262 6923 | (930 262 0623) | 1 | AĞIR SERİ HALKA | ENGAGING SLEEVE |
| 5 | K21.03431 | 960 265 0049 | (947 265 0349) | 2 | AĞIR SERİ HİLAL PABUCU | SLIDING PAD |
| 6 | K21.03038 | 947 262 0334 | | 1 | SERİ SENKROMENÇ | ENGAGING RING |

SYNCHRONIZER KIT PLANETARY
NEW MODEL

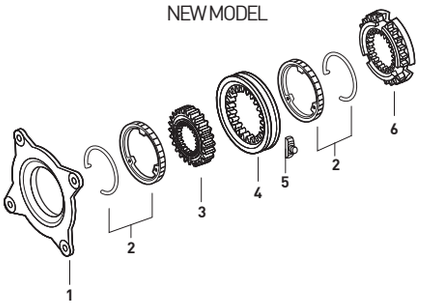


| Fig. | Kacmaz No. | Oem No | Oem Old No | Pcs. | Ürün Tanımı | Description |
|---|---|---|---|---|---|---|
| | K21.06204 | | | Kit | AĞIR SERİ SENK.KİT | SYNCH.KIT PLANETARY |
| 1 | K21.03185 | 947 260 0945 | | 2 | AĞIR SERİ FRENLEME (Mo) | SYNCHRONIZING CONE/Mo |
| 2 | K21.03079 | 389 262 4935 | (389 262 2035) | 1 | A.SERİ YILDIZ DİŞLİ 73 DİŞ | SYNCHRONIZER HUB 73 T. |
| 3 | K21.03033 | 945 262 6923 | (930 262 0623) | 1 | AĞIR SERİ HALKA | ENGAGING SLEEVE |
| 4 | K21.03431 | 960 265 0049 | (947 265 0349) | 2 | AĞIR SERİ HİLAL PABUCU | SLIDING PAD |

SYNCHRONIZER KIT PLANETARY
NEW MODEL

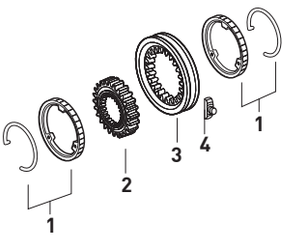


| Fig. | Kacmaz No. | Oem No | Oem Old No | Pcs. | Ürün Tanımı | Description |
|---|---|---|---|---|---|---|
| | K21.06525 | | | Kit | AĞIR SERİ SENK.KİT | SYNCH.KIT PLANETARY |
| 1 | K21.03305 | 947 260 0736 | | 1 | TABLA SENKROMENÇ | FOLLOWER RING |
| 2 | K21.03185 | 947 260 0945 | | 2 | AĞIR SERİ FRENLEME (Mo) | SYNCHRONIZING CONE/Mo |
| 3 | K21.03033 | 945 262 6923 | (930 262 0623) | 1 | AĞIR SERİ HALKA | ENGAGING SLEEVE |
| 4 | K21.03431 | 960 265 0049 | (947 265 0349) | 2 | AĞIR SERİ HİLAL PABUCU | SLIDING PAD |
| 5 | K21.03038 | 947 262 0334 | | 1 | SERİ SENKROMENÇ | ENGAGING RING |

SYNCHRONIZER KIT PLANETARY
NEW MODEL

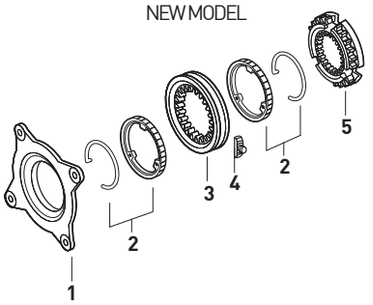


| Fig. | Kacmaz No. | Oem No | Oem Old No | Pcs. | Ürün Tanımı | Description |
|---|---|---|---|---|---|---|
| 1 | K21.06969 | 960 264 0105 | | 1 | PTO MİLİ | INTERM.SHAFT |
| 2 | K21.03558 | 947 264 0287 | | 1 | YAĞ POMPA KAPAĞI | OIL PUMP COVER |
| 3 | K21.03613 | 004 981 9225 | (004 981 8625) | 1 | PTO MİL BİLYASI | ROLLER BEARING |
| 4 | K21.06964 | 000471 045000 | (003 994 3741) | 1 | PTO MİL BİLYA SEKMANI | RETAINING RING |
| 5 | K21.06998 | 017 981 1705 | | 1 | PTO BORU DİŞLİ BİLYASI | ROLLER BEARING |
| 6 | | 947 260 4708 | | 1 | PTO BORU DİŞLİ | GEAR |
| 7 | | 017 981 1805 | | 2 | PTO BORU DİŞLİ BİLYASI | ROLLER BEARING |
| 8 | K21.04334 | 945 264 0006 | | 1 | PTO ARA ADAPTÖR MİLİ | INTERM.SHAFT |
| 9 | | 387 264 3652 | | 2 | BİLYA AYAR RAYNELİ | THRUST WASHER |
| 9 | | 387 264 3752 | | 2 | BİLYA AYAR RAYNELİ | THRUST WASHER |
| 9 | | 387 264 7152 | | 2 | BİLYA AYAR RAYNELİ | THRUST WASHER |
| 9 | | 387 264 4052 | | 2 | BİLYA AYAR RAYNELİ | THRUST WASHER |
| 10 | | 000988 022010 | | 2 | BİLYA AYAR PULU | THRUST WASHER |
| 11 | K21.04333 | 385 993 5201 | | 1 | YAY | SPRING |
| 12 | | 990 990 1700 | | 1 | BİLYA AYAR PUL SEKMANI | RETAINING RING |
| 13 | K21.04332 | 000625 000629 | | 1 | PTO MIL ŞAPKASI | PTO SHAFT CAP |
| 14 | | 990 981 0300 | | 1 | PTO BORU DİŞLİ BİLYASI | ROLLER BEARING |
| 15 | | 947 264 0921 | (947 264 0821) | 1 | PTO BORU DİŞLİ | GEAR |
| 16 | K21.04362 | | | kit | ARA ADAPTÖR MİLİ KOMPLE | INTERM.SHAFT COMP. |

P.T.O. (POWER TAKE OFF)

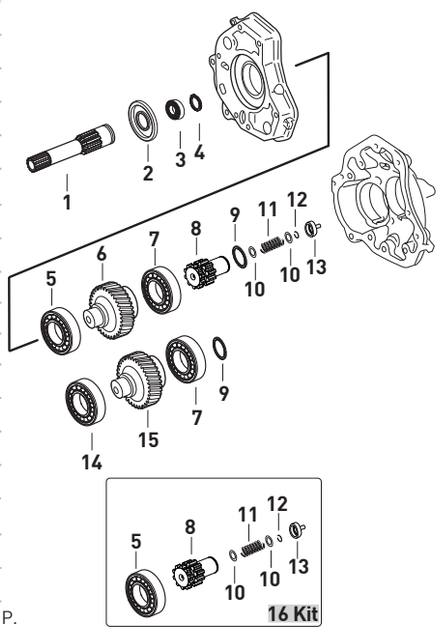




Original parts names, oem numbers, symbols and descriptions used in this catalogue are for reference purposes only.

# GEARBOX G 141- 9 / 14,57 - 1,0 MAIN SHAFT COMPLETE

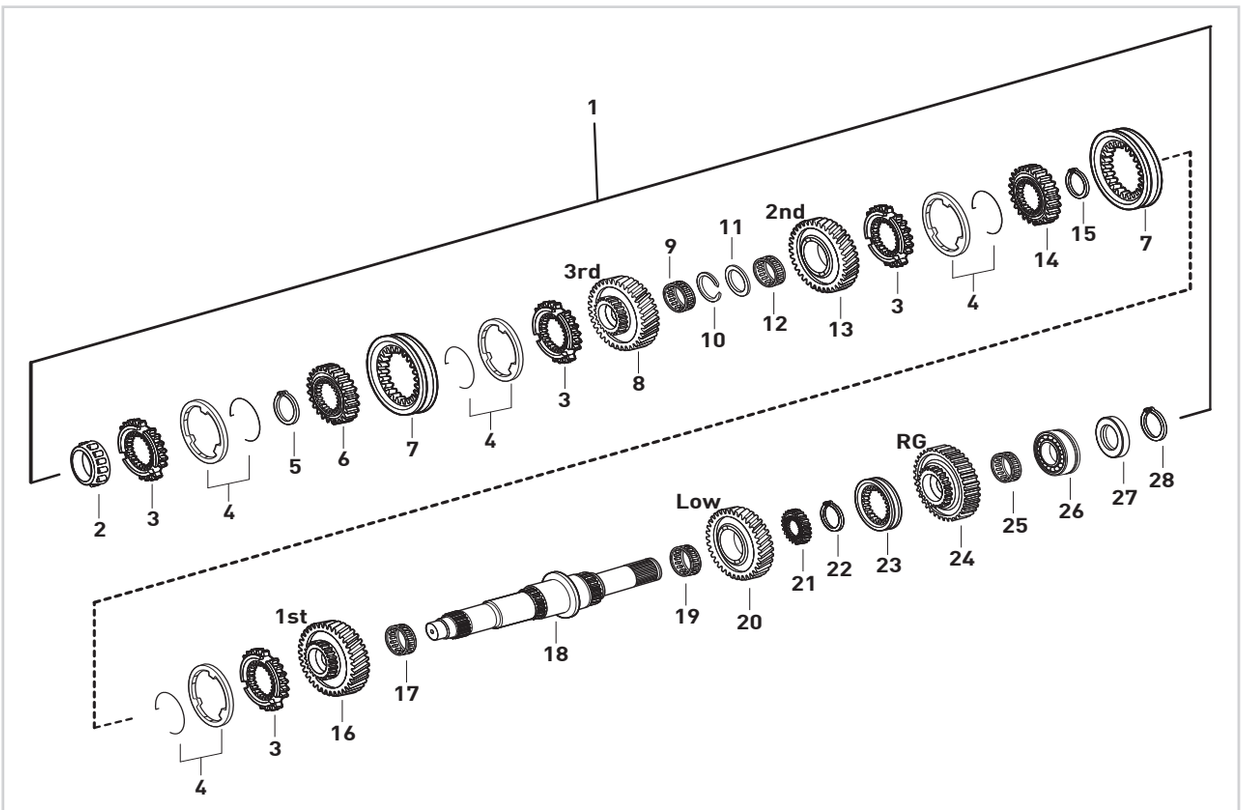


| Fig. | Kacmaz No. | Oem No | Oem Old No | Pcs. | Ürün Tanımı | Description | Sizes |
|---|---|---|---|---|---|---|---|
| 1 | K21.06857 | | | kit | KAMALI MİL KOMPLE | MAIN SHAFT COMPLETE | |
| 2 | K21.03645 | 016 981 0505 | (016 981 1505) | 1 | KAMALI MİL UÇ BİLYA | ROLLER BEARING | 39,69X30,39mm |
| 3 | K21.03147 | 945 262 7734 | (945 262 3634) | 4 | 1./2./3./PRİZ.SENKROMENÇ | ENGAGING RING | |
| 4 | K21.03136 | 945 260 2245 | (946 262 6337) | 4 | 1./2./3./PRİZ.FRENLEME (Mo) | SYNCHRONIZING CONE / Mo | |
| 5 | K21.06958 | 976 262 0773 | | 1 | PRİZ./3.VİTES YIL.DİŞLİ SEKMANI | RETAINING RING | 2,30mm |
| 6 | K21.06595 | 947 262 2235 | | 1 | PRİZ.VE 3.VİTES YILDIZ DİŞLİ | SYNCHRONIZER HUB | |
| 7 | K21.03137 | 945 262 6823 | (945 262 6423) | 2 | 1./2./3.PRİZ.SENKROMENÇ HALKA | ENGAGING SLEEVE | |
| 8 | K21.03317 | 947 262 0613 | (947 262 0413) | 1 | 3.VİTES DİŞLİSİ 31 DİŞ | GEAR 3rd 31 T | |
| 9 | K21.03833 | 019 981 6010 | (019 981 5810) | 1 | 3.VİTES MASURA BİLYA | NEEDLE CAGE | 60x68x54mm |
| 10 | K21.06913 | 389 262 3473 | | 1 | 3.VİTES MASURA BİLYA SEKMANI | RETAINING RING | 2,50mm |
| 11 | K21.04143 | 389 262 1862 | | 1 | 2./3.VİTES MASURA BİLYA PULU | THRUST WASHER | |
| 12 | K21.03834 | 021 981 5210 | (021 981 6510) | 1 | 2.VİTES MASURA BİLYA | NEEDLE CAGE | 60X76X42mm |
| 13 | K21.03319 | 947 262 0612 | (947 262 0412) | 1 | 2.VİTES DİŞLİSİ 36 DİŞ | GEAR 2nd 36 T. | |
| 14 | K21.03321 | 947 262 0135 | | 1 | 1./2.VİTES YILDIZ DİŞLİ | SYNCHRONIZER HUB | |
| 15 | K21.04337 | 387 262 0873 | | 1 | R./C.VİTES YILDIZ DİŞLİ SEKMANI | RETAINING RING | 2,60mm |
| 16 | K21.03322 | 947 262 1911 | (947 262 1611) | 1 | 1.VİTES DİŞLİSİ 40 DİŞ | GEAR 1st 40 T. | |
| 17 | K21.03817 | 019 981 4410 | (007 981 4210) | 1 | 2.VİTES MASURA BİLYA | NEEDLE CAGE | 75X83X55mm |
| 18 | K21.03324 | 947 262 0305 | | 1 | KAMALI MİL | MAIN SHAFT | |
| 19 | K21.03827 | 013 981 1210 | (006 981 6410) | 1 | C.VİTES MASURA BİLYA | NEEDLE CAGE | 75X83X33mm |
| 20 | K21.03325 | 947 262 1811 | (947 262 2411) | 1 | C VİTES DİŞLİSİ 41 DİŞ | GEAR CRAWLING GEAR 41 T. | |
| 21 | K21.03328 | 947 262 0735 | (947 262 0835) | 1 | GERİ VİTES YILDIZ DİŞLİ | SYNCHRONIZER HUB | |
| 22 | K21.04352 | 387 262 0673 | | 1 | R./C.VİTES YILDIZ DİŞLİ SEKMANI | RETAINING RING | 2,50mm |
| 23 | K21.03330 | 945 262 2023 | | 1 | GERİ VİTES HALKASI | ENGAGING SLEEVE | |
| 24 | K21.03331 | 947 262 0633 | (947 262 1133) | 1 | GERİ VİTES DİŞLİSİ 39 DİŞ | REVERSE GEAR 39 T. | |
| 25 | K21.03835 | 012 981 5410 | (021 981 6310) | 1 | GERİ VİTES MASURA BİLYA | NEEDLE CAGE | 65X73X30mm |
| 26 | K21.03653 | 016 981 0105 | (016 981 0005) | 1 | KAMALI MİL ARKA BİLYA | ROLLER BEARING | 55X130X27,25mm |
| 27 | K21.04133 | 947 262 0152 | | 1 | GÜNEŞ DİŞLİ PULU | THRUST WASHER | |
| 28 | K21.04354 | 000471 050000 | | 1 | KAMALI MİL ARKA BİLYA SEKMANI | RETAINING RING | 50X2mm |



**Original parts names, oem numbers, symbols and descriptions used in this catalogue are for reference purposes only.**

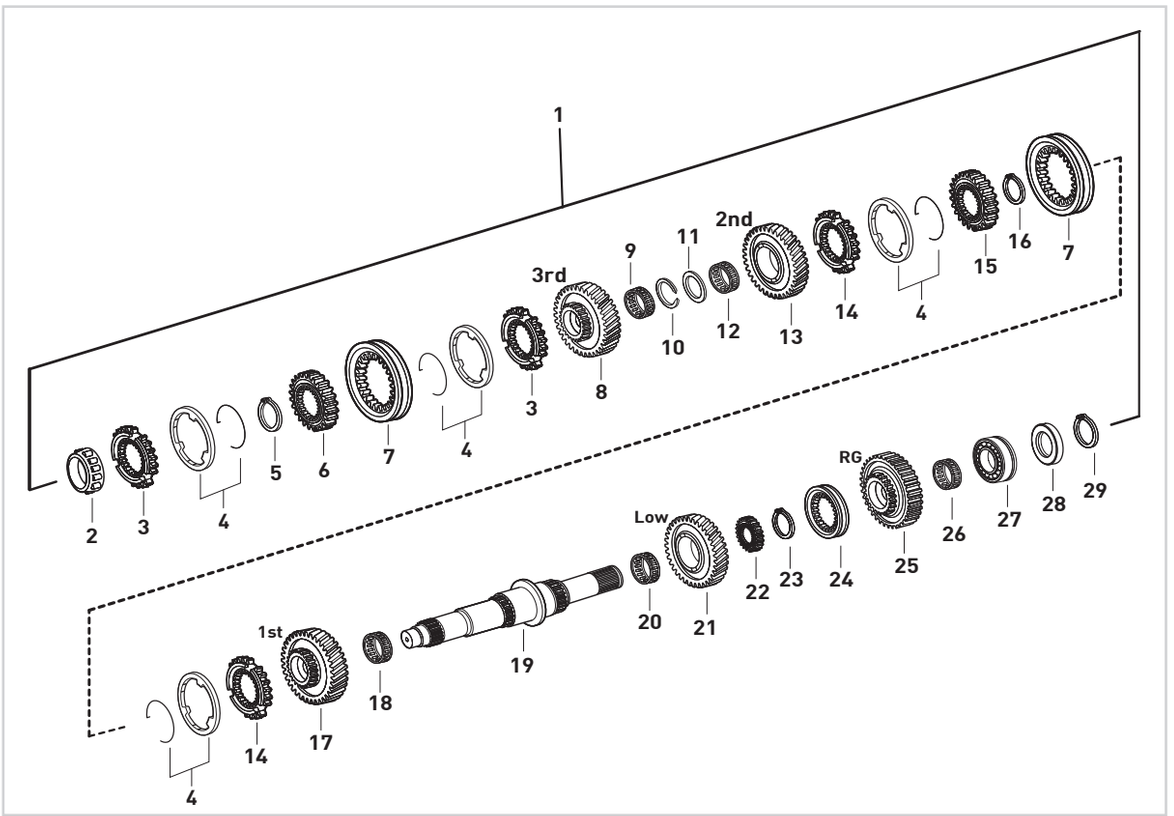


| Fig. | Kacmaz No. | Oem No | Oem Old No | Pcs. | Ürün Tanımı | Description | Sizes |
|---|---|---|---|---|---|---|---|
| 1 | K21.06381 | | | kit | KAMALI MİL KOMPLE | MAIN SHAFT COMPLETE | |
| 2 | K21.03645 | 016 981 0505 | (016 981 1505) | 1 | KAMALI MİL UÇ BİLYA | ROLLER BEARING | 39,69X30,39mm |
| 3 | K21.03314 | 945 262 7834 | (945 262 5734) | 2 | PRİZ.VE 3.VİTES SENKROMENÇ | ENGAGING RING | |
| 4 | K21.03136 | 945 260 2245 | (946 262 6337) | 4 | 1./2./3./PRİZ.FRENLEME(Mo) | SYNCHRONIZING CONE / Mo | |
| 5 | K21.06958 | 976 262 0773 | | 1 | PRİZ./3.VİTES YIL.DİŞLİ SEKMANI | RETAINING RING | 2,30mm |
| 6 | K21.03316 | 947 262 0435 | | 1 | PRİZ.VE 3.VİTES YILDIZ DİŞLİ | SYNCHRONIZER HUB | |
| 7 | K21.03137 | 945 262 6823 | (945 262 6423) | 2 | 1./2./3.PRİZ.SENKROMENÇ HALKA | ENGAGING SLEEVE | |
| 8 | K21.03317 | 947 262 0613 | (947 262 0413) | 1 | 3.VİTES DİŞLİSİ 31 DİŞ | GEAR 3rd 31 T. | |
| 9 | K21.03833 | 019 981 6010 | (019 981 5810) | 1 | 3.VİTES MASURA BİLYA | NEEDLE CAGE | 60x68x54mm |
| 10 | K21.06913 | 389 262 3473 | | 1 | 3.VİTES MASURA BİLYA SEKMANI | RETAINING RING | 2,50mm |
| 11 | K21.04143 | 389 262 1862 | | 1 | 2./3.VİTES MASURA BİLYA PULU | THRUST WASHER | |
| 12 | K21.03834 | 021 981 5210 | (021 981 6510) | 1 | 2.VİTES MASURA BİLYA | NEEDLE CAGE | 60X76X42mm |
| 13 | K21.03319 | 947 262 0612 | (947 262 0412) | 1 | 2.VİTES DİŞLİSİ 36 DİŞ | GEAR 2nd 36 T. | |
| 14 | K21.03147 | 945 262 7734 | (945 262 3634) | 2 | 1./2.VİTES SENKROMENÇ | ENGAGING RING | |
| 15 | K21.03321 | 947 262 0135 | | 1 | 1./2.VİTES YILDIZ DİŞLİ | SYNCHRONIZER HUB | |
| 16 | K21.04337 | 387 262 0873 | | 1 | R./C.VİTES YILDIZ DİŞLİ SEKMANI | RETAINING RING | 2,60mm |
| 17 | K21.03322 | 947 262 1911 | (947 262 1611) | 1 | 1.VİTES DİŞLİSİ 40 DİŞ | GEAR 1st 40 T. | |
| 18 | K21.03817 | 019 981 4410 | (007 981 4210) | 1 | 2.VİTES MASURA BİLYA | NEEDLE CAGE | 75X83X55mm |
| 19 | K21.03324 | 947 262 0305 | | 1 | KAMALI MİL | MAIN SHAFT | |
| 20 | K21.03827 | 013 981 1210 | (006 981 6410) | 1 | C.VİTES MASURA BİLYA | NEEDLE CAGE | 75X83X33mm |
| 21 | K21.03325 | 947 262 1811 | (947 262 2411) | 1 | C VİTES DİŞLİSİ 41 DİŞ | GEAR CRAWLING GEAR 41 T. | |
| 22 | K21.03328 | 947 262 0735 | (947 262 0835) | 1 | GERİ VİTES YILDIZ DİŞLİ | SYNCHRONIZER HUB | |
| 23 | K21.04352 | 387 262 0673 | | 1 | R./C.VİTES YILDIZ DİŞLİ SEKMANI | RETAINING RING | 2,50mm |
| 24 | K21.03330 | 945 262 2023 | | 1 | GERİ VİTES HALKASI | ENGAGING SLEEVE | |
| 25 | K21.03331 | 947 262 0633 | (947 262 1133) | 1 | GERİ VİTES DİŞLİSİ 39 DİŞ | REVERSE GEAR 39 T. | |
| 26 | K21.03835 | 012 981 5410 | (021 981 6310) | 1 | GERİ VİTES MASURA BİLYA | NEEDLE CAGE | 65X73X30mm |
| 27 | K21.03653 | 016 981 0105 | (016 981 0005) | 1 | KAMALI MİL ARKA BİLYA | ROLLER BEARING | 55X130X27,25mm |
| 28 | K21.04133 | 947 262 0152 | | 1 | GÜNEŞ DİŞLİ PULU | THRUST WASHER | |
| 29 | K21.04354 | 000471 050000 | | 1 | KAMALI MİL ARKA BİLYA SEKMANI | RETAINING RING | 50X2mm |



Original parts names, oem numbers, symbols and descriptions used in this catalogue are for reference purposes only.

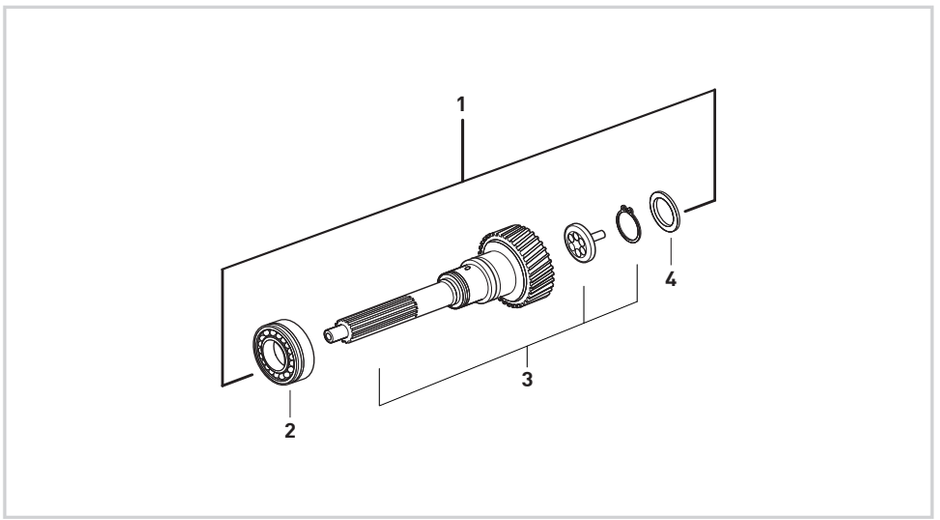


| Fig. | Kacmaz No. | Oem No | Oem Old No | Pcs. | Ürün Tanımı | Description | Sizes |
|---|---|---|---|---|---|---|---|
| 1 | K21.06447 | | | Kit | PRİZDİREK KOMPLE | INPUT SHAFT COMPLETE | |
| 2 | K21.03644 | 016 981 1405 | (016 981 1105) | 1 | PRİZDİREK ÖN BİLYA | ROLLER BEARING | 75X130X27,25mm |
| 3 | K21.03310 | 947 262 4202 | (947 262 1302) | 1 | PRİZDİREK 28 DİŞ | INPUT SHAFT 28 T. | |
| 4 | K21.04142 | 000 262 9462 | | 1 | PRİZDİREK ARKA KEÇE | OIL SEAL | 68,5X90X7,5mm |

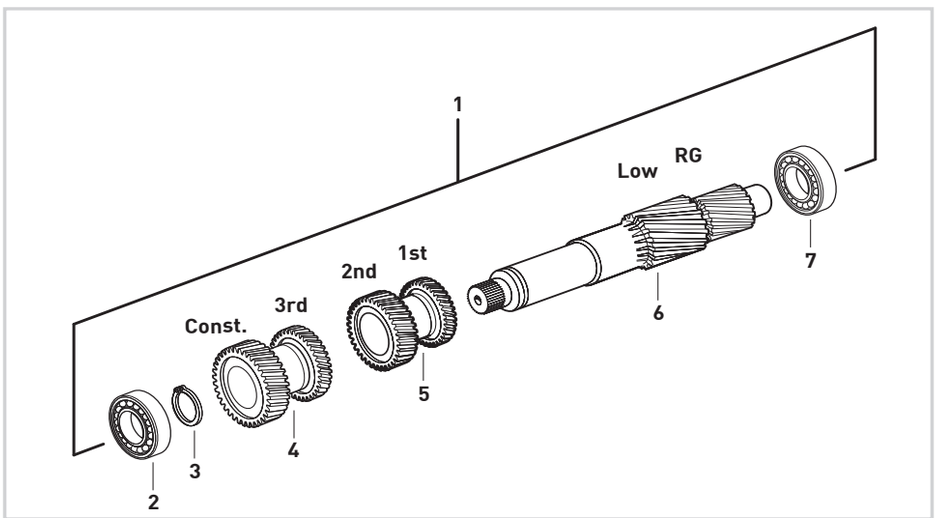


| Fig. | Kacmaz No. | Oem No | Oem Old No | Pcs. | Ürün Tanımı | Description | Sizes |
|---|---|---|---|---|---|---|---|
| 1 | K21.06448 | | | Kit | GRUP MİLİ KOMPLE | COUNTER SHAFT COMPLETE | |
| 2 | K21.03606 | 015 981 9005 | (014 981 1405) | 1 | GRUP MİLİ ÖN BİLYA | ROLLER BEARING | 50,8X100X35mm |
| 3 | K21.04355 | 000471 058000 | | 1 | GRUP MİLİ ÖN BİLYA SEKMANI | RETAINING RING | |
| 4 | K21.03336 | 947 263 0513 | (947 263 0413) | 1 | PRİZ.VE 3.VİT.DİŞ.KARŞ. 32/38 DİŞ | DOUBLE GEAR Const./3rd 32/38 T. | |
| 5 | K21.06248 | 947 263 0111 | | 1 | 1./2.VİT.DİŞ.KARŞILIĞI 21/27 DİŞ | DOUBLE GEAR 1st/2nd 21/27 T. | |
| 6 | K21.03339 | 947 263 0702 | | 1 | GRUP MİLİ 14 DİŞ | COUNTER SHAFT 14 T. | |
| 7 | K21.03647 | 015 981 9705 | (015 981 9605) | 1 | GRUP MİLİ ARKA BİLYA | ROLLER BEARING | 60X110X29,75mm |



**Original parts names, oem numbers, symbols and descriptions used in this catalogue are for reference purposes only.**

# NOTES / NOTLAR



Original parts names, oem numbers, symbols and descriptions used in this catalogue are for reference purposes only.

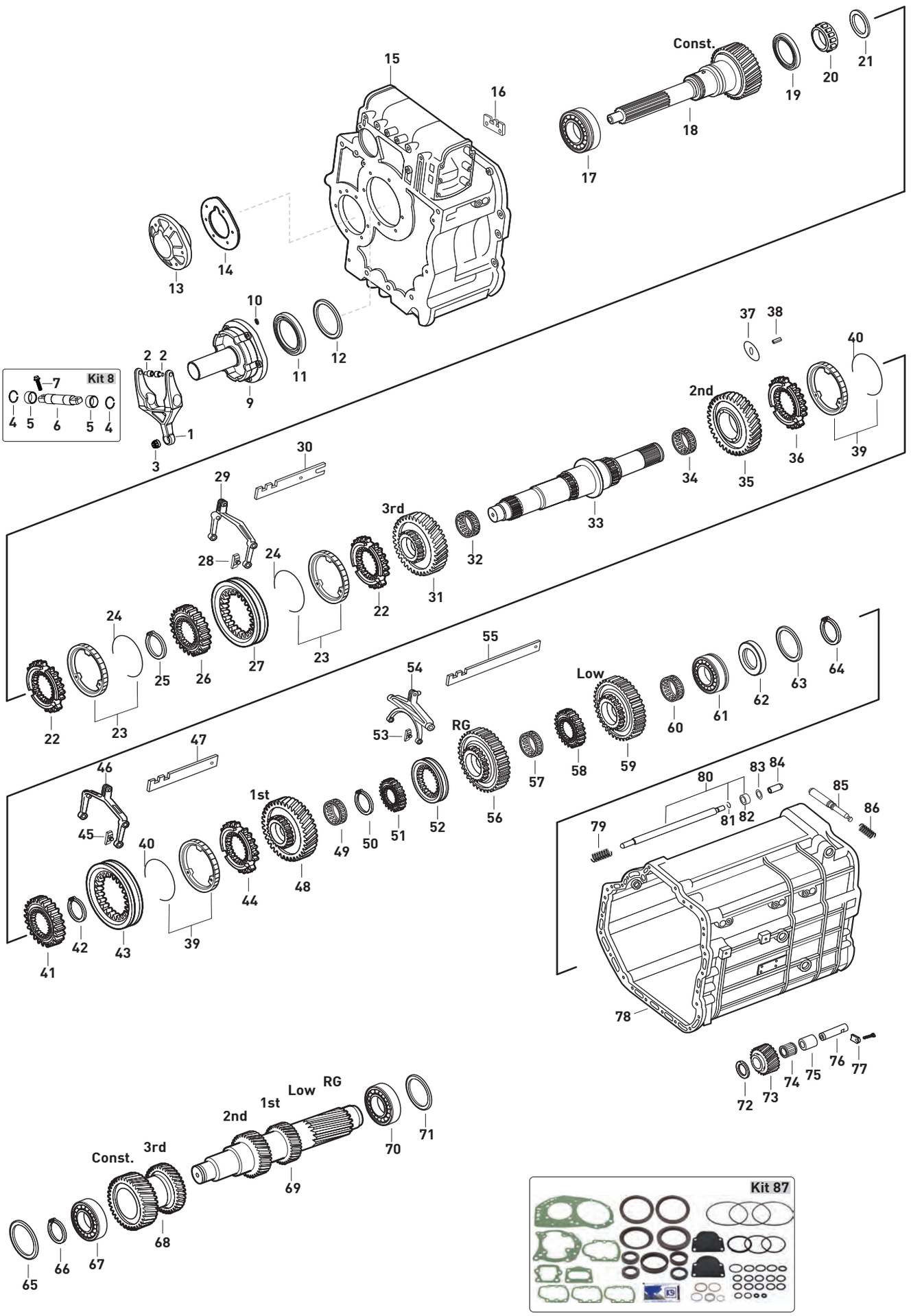




Original parts names, oem numbers, symbols and descriptions used in this catalogue are for reference purposes only.

| Fig. | Kacmaz No | Oem No | Oem Old No | Pcs. | Ürün Tanımı | Description | Sizes | Not | G155-9/15,9 | GO210-8/11,8 EPS |
|---|---|---|---|---|---|---|---|---|---|---|
| 1 | | 650 250 3813 | | 1 | DEBRİYAJ ÇATALI | RELEASE FORK | | | ♦ | ♦ |
| 2 | K21.07038 | 000 254 0017 | | 2 | DEBRİYAJ ÇATAL BURÇ VE PİMİ | CAM ROLLER | | | ♦ | ♦ |
| 3 | K21.07040 | 000 254 0335 | | 1 | DEBRİYAJ ÇATAL PLASTİK BURCU | PLASTIC BUSHING | | | ♦ | ♦ |
| 4 | | 912009 037200 | | 4 | DEBRİYAJ ÇATAL MİL SEKMANI | RETAINING RING | | | ♦ | ♦ |
| 5 | | 001 992 8401 | | 2 | DEBRİYAJ ÇATAL MİL BURCU | BUSHING | | | ♦ | ♦ |
| 6 | | 650 254 0006 | | 1 | DEBRİYAJ ÇATAL MİLİ | SHAFT | | | ♦ | ♦ |
| 7 | | 914112 010025 | | 2 | DEBRİYAJ ÇATAL MİL VİDASI | SCREW | M10X45 | | ♦ | ♦ |
| 8 | K21.04309 | | | Kit | DEBRİYAJ ÇATALI TAMİR TAKIMI | RELEASE FORK REPAIR KIT | | | ♦ | ♦ |
| 9 | K21.03403 | 389 261 3318 | (389 261 1018) | 1 | PRİZDİREK KEÇE KAPAĞI | COVER | | | ♦ | ♦ |
| 10 | K21.03520 | 015 997 2748 | (020 997 8448) | 1 | PRİZDİREK KEÇE KAPAK ORİNGİ | O-RING | 12X4,5mm | | ♦ | ♦ |
| 11 | K21.03521 | 015 997 1647 | (015 997 0647) | 1 | PRİZDİREK ÖN KEÇE | OIL SEAL | 52X68X8mm | | ♦ | ♦ |
| | | | (024 997 2147) | | | | | | | |
| 12 | K21.04162 | 389 262 4152 | (389 262 0955) | 1 | PRİZDİREK AYAR RAYNELİ | THRUST WASHER | 0,10mm | | ♦ | ♦ |
| 12 | K21.04243 | 389 262 0855 | | 1 | PRİZDİREK AYAR RAYNELİ | THRUST WASHER | 0,15mm | | ♦ | ♦ |
| 12 | K21.04151 | 389 262 0755 | | 1 | PRİZDİREK AYAR RAYNELİ | THRUST WASHER | 0,20mm | | ♦ | ♦ |
| 12 | K21.06715 | 389 262 3055 | | 1 | PRİZDİREK AYAR RAYNELİ | THRUST WASHER | 0,25mm | | ♦ | ♦ |
| 12 | K21.04221 | 389 262 3255 | | 1 | PRİZDİREK AYAR RAYNELİ | THRUST WASHER | 0,31mm | | ♦ | ♦ |
| 12 | K21.04163 | 389 262 3555 | (389 262 0655) | 1 | PRİZDİREK AYAR RAYNELİ | THRUST WASHER | 0,40mm | | ♦ | ♦ |
| | | | (389 262 4452) | | | | | | | |
| 12 | K21.04164 | 389 262 3755 | (389 262 1954) | 1 | PRİZDİREK AYAR RAYNELİ | THRUST WASHER | 0,46mm | | ♦ | ♦ |
| 12 | K21.04246 | 389 262 3855 | | 1 | PRİZDİREK AYAR RAYNELİ | THRUST WASHER | 0,49mm | | ♦ | ♦ |
| 12 | K21.04250 | 389 262 4055 | (389 262 0155) | 1 | PRİZDİREK AYAR RAYNELİ | THRUST WASHER | 0,55mm | | ♦ | ♦ |
| | | | (389 262 2154) | | | | | | | |
| 12 | K21.04167 | 389 262 4255 | (389 262 2254) | 1 | PRİZDİREK AYAR RAYNELİ | THRUST WASHER | 0,61mm | | ♦ | ♦ |
| 12 | K21.04168 | 389 262 4355 | (389 262 2354) | 1 | PRİZDİREK AYAR RAYNELİ | THRUST WASHER | 0,64mm | | ♦ | ♦ |
| 12 | K21.04169 | 389 262 4555 | (389 262 2454) | 1 | PRİZDİREK AYAR RAYNELİ | THRUST WASHER | 0,70mm | | ♦ | ♦ |
| 12 | K21.04170 | 389 262 4755 | (389 262 2554) | 1 | PRİZDİREK AYAR RAYNELİ | THRUST WASHER | 0,76mm | | ♦ | ♦ |
| 12 | K21.04281 | 389 262 4855 | (389 262 0555) | 1 | PRİZDİREK AYAR RAYNELİ | THRUST WASHER | 0,79mm | | ♦ | ♦ |
| 12 | K21.04282 | 389 262 5555 | | 1 | PRİZDİREK AYAR RAYNELİ | THRUST WASHER | 1,00mm | | ♦ | ♦ |
| 12 | K21.04171 | 389 262 9654 | (389 262 2654) | 1 | PRİZDİREK AYAR RAYNELİ | THRUST WASHER | 2,00mm | | ♦ | ♦ |
| 13 | | 389 261 1933 | (389 261 0633) | 1 | GRUP MİLİ ÖN BİLYA KAPAĞI | COVER | | | ♦ | ♦ |
| | | | (389 262 0133) | | | | | | | |
| 14 | | 387 261 4580 | | 1 | GRUP MİLİ ÖN BİLYA KAPAK CONTASI | GASKET | | | ♦ | ♦ |
| 15 | | 389 261 0208 | (389 261 9502) | 1 | ŞANZIMAN ÖN GÖVDE | HOUSING | | | ♦ | ♦ |
| 16 | | 389 267 0059 | | 1 | VİTES HİLAL ÇITA KİLİTLEMESİ | BRACKET | | | ♦ | ♦ |
| 17 | K21.03618 | 011 981 1305 | (014 981 9005) | 1 | PRİZDİREK ÖN BİLYA | ROLLER BEARING | 75X140X34,25mm | | ♦ | ♦ |
| | | | (008 981 8605) | | | | | | | |
| | | | (008 981 2605) | | | | | | | |
| 18 | K21.03347 | 389 262 3502 | | 1 | PRİZDİREK 24 DİŞ | INPUT SHAFT 24 T . | | | ♦ | ♦ |
| 19 | K21.03517 | 018 997 8347 | (018 997 8647) | 1 | PRİZDİREK ARKA KEÇE | OIL SEAL | | | ♦ | ♦ |
| 20 | K21.03643 | 008 981 2805 | (008 981 4005) | 1 | KAMALI MİL UÇ BİLYA | ROLLER BEARING | 40X91X32mm | | ♦ | ♦ |
| 21 | K21.04127 | 389 262 6454 | | 1 | KAMALI MİL UÇ BİLYA ALT PULU | THRUST WASHER | 2,50mm | | ♦ | ♦ |
| 21 | K21.04120 | 389 262 5552 | | 1 | KAMALI MİL UÇ BİLYA ALT PULU | THRUST WASHER | 1,20mm | | ♦ | ♦ |
| 21 | K21.04149 | | | 1 | KAMALI MİL UÇ BİLYA ALT PULU | THRUST WASHER | 1,10mm | | ♦ | ♦ |
| 21 | K21.04148 | | | 1 | KAMALI MİL UÇ BİLYA ALT PULU | THRUST WASHER | 1,00mm | | ♦ | ♦ |
| 21 | K21.04147 | | | 1 | KAMALI MİL UÇ BİLYA ALT PULU | THRUST WASHER | 0,90mm | | ♦ | ♦ |
| 21 | K21.04121 | 389 262 5652 | | 1 | KAMALI MİL UÇ BİLYA ALT PULU | THRUST WASHER | 0,80mm | | ♦ | ♦ |
| 21 | K21.04128 | 389 262 2954 | | 1 | KAMALI MİL UÇ BİLYA ALT PULU | THRUST WASHER | 0,70mm | | ♦ | ♦ |
| 21 | K21.04129 | 389 262 3054 | | 1 | KAMALI MİL UÇ BİLYA ALT PULU | THRUST WASHER | 0,60mm | | ♦ | ♦ |
| 21 | K21.04122 | 389 262 5752 | | 1 | KAMALI MİL UÇ BİLYA ALT PULU | THRUST WASHER | 0,50mm | | ♦ | ♦ |
| 21 | K21.04130 | 389 262 7954 | | 1 | KAMALI MİL UÇ BİLYA ALT PULU | THRUST WASHER | 0,30mm | | ♦ | ♦ |
| 21 | K21.04123 | 389 262 5852 | | 1 | KAMALI MİL UÇ BİLYA ALT PULU | THRUST WASHER | 0,20mm | | ♦ | ♦ |
| 21 | K21.04124 | 389 262 5952 | | 1 | KAMALI MİL UÇ BİLYA ALT PULU | THRUST WASHER | 0,10mm | | ♦ | ♦ |

NOTES :
Parts encoded alphabetic and numaric are used together.

NOTLAR :
Alfabetik ve rakam ile kodlanan parçalar birlikte kullanılır.





Original parts names, oem numbers, symbols and descriptions used in this catalogue are for reference purposes only.

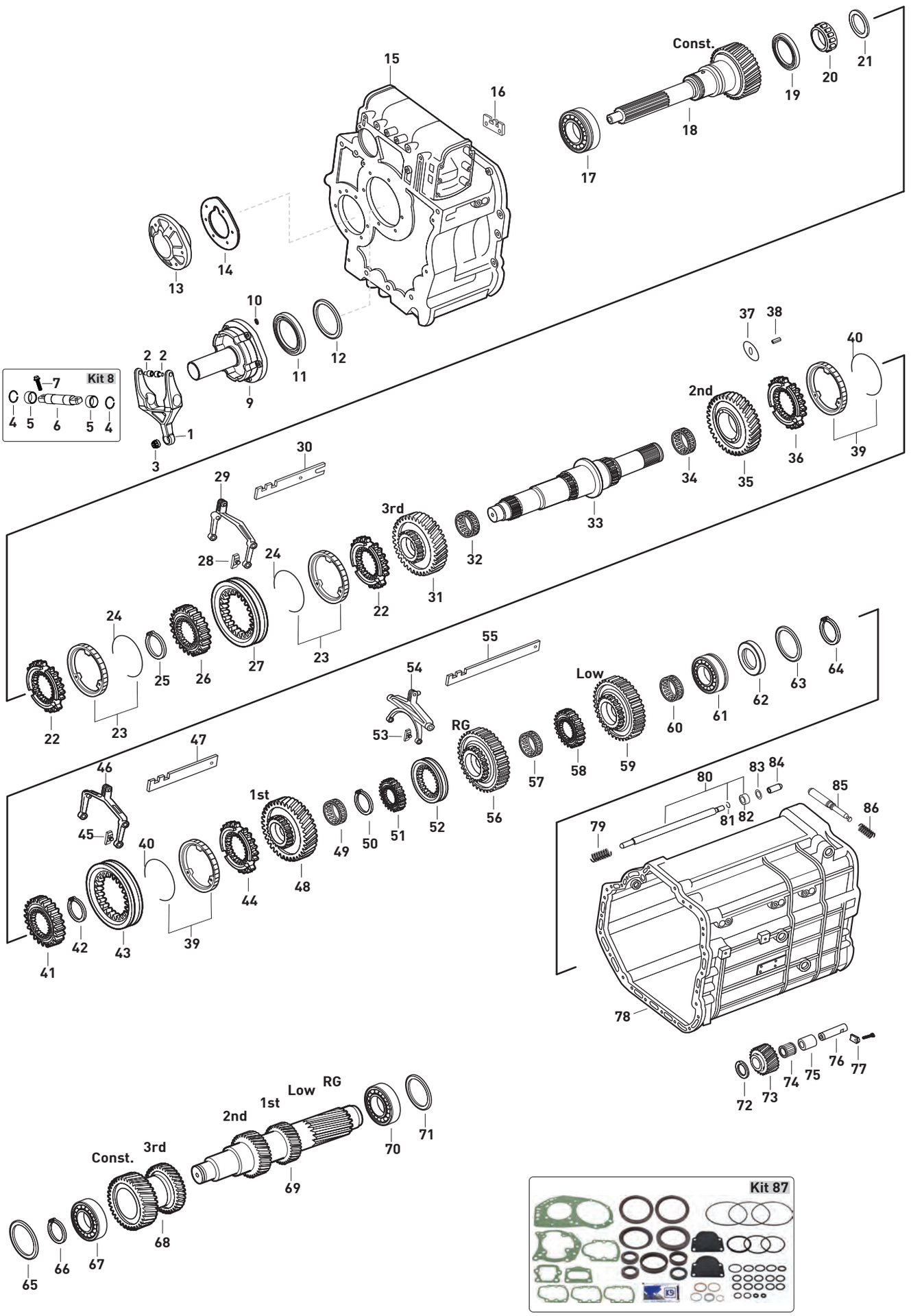




Original parts names, oem numbers, symbols and descriptions used in this catalogue are for reference purposes only.

| Fig. | Kacmaz No | Oem No | Oem Old No | Pcs. | Ürün Tanımı | Description | Sizes | Not | G155-9/15,9 | GO210-8/11,8 EPS |
|---|---|---|---|---|---|---|---|---|---|---|
| 22 | K21.03012 | 389 262 5634 | (389 262 3934) | 2 | PRİZ.VE 3.VİTES SENKROMENÇ | ENGAGING RING | | | ♦ | ♦ |
| | | | (389 262 2434) | | | | | | | |
| | | | (387 262 0834) | | | | | | | |
| 23 | K21.03015 | 389 262 0637 | (387 262 0837) | 2 | PRİZ.VE 3.VİTES FRENLEME (Mo) | SYNCHRONIZING CONE / Mo | | | ♦ | ♦ |
| | | | (389 262 1037) | | | | | | | |
| 24 | K21.03044 | 387 262 1093 | (387 262 0693) | 2 | FRENLEME TELİ | SPRING | | | ♦ | ♦ |
| | | | (960 262 1393) | | | | | | | |
| 25 | K21.04336 | 387 262 0473 | | 1 | PRİZ./3.VİTES YILDIZ DİŞLİ SEKMANI | RETAINING RING | 2,40mm | | ♦ | ♦ |
| 25 | K21.07018 | 387 262 0573 | | 1 | PRİZ./3.VİTES YILDIZ DİŞLİ SEKMANI | RETAINING RING | 2,45mm | | ♦ | ♦ |
| 25 | K21.04352 | 387 262 0673 | | 1 | PRİZ./3.VİTES YILDIZ DİŞLİ SEKMANI | RETAINING RING | 2,50mm | | ♦ | ♦ |
| 25 | K21.07019 | 387 262 0773 | | 1 | PRİZ./3.VİTES YILDIZ DİŞLİ SEKMANI | RETAINING RING | 2,55mm | | ♦ | ♦ |
| 25 | K21.04337 | 387 262 0873 | | 1 | PRİZ./3.VİTES YILDIZ DİŞLİ SEKMANI | RETAINING RING | 2,60mm | | ♦ | ♦ |
| 25 | K21.06929 | 387 262 0973 | | 1 | PRİZ./3.VİTES YILDIZ DİŞLİ SEKMANI | RETAINING RING | 2,65mm | | ♦ | ♦ |
| 25 | K21.06669 | 387 262 7673 | | 1 | PRİZ./3.VİTES YILDIZ DİŞLİ SEKMANI | RETAINING RING | 2,70mm | | ♦ | ♦ |
| 25 | K21.07020 | 387 262 7773 | | 1 | PRİZ./3.VİTES YILDIZ DİŞLİ SEKMANI | RETAINING RING | 2,75mm | | ♦ | ♦ |
| 25 | K21.06930 | 387 262 7873 | | 1 | PRİZ./3.VİTES YILDIZ DİŞLİ SEKMANI | RETAINING RING | 2,80mm | | ♦ | ♦ |
| 26 | K21.03399 | 389 262 0635 | | 1 | PRİZ.VE 3.VİTES YILDIZ DİŞLİ | SYNCHRONIZER HUB | | | ♦ | ♦ |
| 27 | K21.03011 | 389 262 3023 | (389 262 2223) | 1 | PRİZ.VE 3.VİTES HALKA | ENGAGING SLEEVE | | | ♦ | ♦ |
| | | | (389 262 0623) | | | | | | | |
| 28 | K21.03408 | 389 265 2349 | (389 265 1149) | 2 | PRİZ.VE 3.VİTES HİLAL PABUCU | SLIDING PAD | | | ♦ | ♦ |
| | | | (389 265 0849) | | | | | | | |
| | | | (945 265 0249) | | | | | | | |
| 29 | | 389 260 4030 | (389 260 2830) | 1 | PRİZ.VE 3.VİTES HİLALİ | GEAR SHIT FORK | | | ♦ | ♦ |
| | | | (389 260 0830) | | | | | | | |
| 30 | | 389 265 6604 | | 1 | PRİZ.VE 3.VİTES HİLAL ÇITASI | SHIFTING ROD | | | ♦ | ♦ |
| 31 | K21.03349 | 389 262 1013 | | 1 | 3.VİTES DİŞLİSİ 27 DİŞ | GEAR 3rd 27 T. | | | ♦ | ♦ |
| 32 | K21.03830 | 009 981 1410 | (008 981 9210) | 1 | 3.VİTES MASURA BİLYA | NEEDLE CAGE | 75X83X48mm | | ♦ | ♦ |
| 33 | K21.03350 | 389 262 1305 | | 1 | KAMALI MİL | MAIN SHAFT | | | ♦ | ♦ |
| 34 | K21.03810 | 018 981 6610 | (010 981 5310) | 1 | 2.VİTES MASURA BİLYA | NEEDLE CAGE | 85X93X53mm | | ♦ | ♦ |
| 35 | K21.03351 | 389 262 1412 | | 1 | 2.VİTES DİŞLİSİ 34 DİŞ | GEAR 2nd 34 T. | | | ♦ | ♦ |
| 36 | K21.03019 | 389 262 0534 | | 1 | 2.VİTES SENKROMENÇ | ENGAGING RING | | | ♦ | ♦ |
| 37 | | 389 262 0042 | | 3 | 2.VİTES SENKROMENÇ PLAKASI | PLATE | | | ♦ | ♦ |
| 38 | | 001481 005020 | | 3 | 2.VİTES SENKROMENÇ PLAKA PİMİ | PIN | | | ♦ | ♦ |
| 39 | K21.03016 | 389 262 0737 | (387 262 0937) | 2 | 1./2.VİTES FRENLEME (Mo) | SYNCHRONIZING CONE / Mo | | | ♦ | ♦ |
| | | | (389 262 1137) | | | | | | | |
| 40 | K21.03055 | 387 262 0893 | (387 262 0793) | 2 | FRENLEME TELİ | SPRING | | | ♦ | ♦ |
| 41 | K21.03056 | 389 262 0035 | | 1 | 1./2.VİTES YILDIZ DİŞLİ | SYNCHRONIZER HUB | | | ♦ | ♦ |
| 42 | K21.04343 | 387 262 2073 | | 1 | 1./2.VİTES YILDIZ DİŞLİ SEKMANI | RETAINING RING | 2,40mm | | ♦ | ♦ |
| 42 | K21.06687 | 387 262 2173 | | 1 | 1./2.VİTES YILDIZ DİŞLİ SEKMANI | RETAINING RING | 2,45mm | | ♦ | ♦ |
| 42 | K21.04342 | 007 994 0041 | (387 262 2273) | 1 | 1./2.VİTES YILDIZ DİŞLİ SEKMANI | RETAINING RING | 2,50mm | | ♦ | ♦ |
| 42 | K21.04359 | 387 262 2373 | | 1 | 1./2.VİTES YILDIZ DİŞLİ SEKMANI | RETAINING RING | 2,55mm | | ♦ | ♦ |
| 42 | K21.04345 | 387 262 2473 | | 1 | 1./2.VİTES YILDIZ DİŞLİ SEKMANI | RETAINING RING | 2,60mm | | ♦ | ♦ |
| 42 | K21.07021 | 387 262 2573 | | 1 | 1./2.VİTES YILDIZ DİŞLİ SEKMANI | RETAINING RING | 2,65mm | | ♦ | ♦ |
| 42 | K21.04344 | 387 262 7973 | | 1 | 1./2.VİTES YILDIZ DİŞLİ SEKMANI | RETAINING RING | 2,70mm | | ♦ | ♦ |
| 42 | K21.07022 | 387 262 8073 | | 1 | 1./2.VİTES YILDIZ DİŞLİ SEKMANI | RETAINING RING | 2,75mm | | ♦ | ♦ |
| 42 | K21.06588 | 387 262 8173 | | 1 | 1./2.VİTES YILDIZ DİŞLİ SEKMANI | RETAINING RING | 2,80mm | | ♦ | ♦ |
| 43 | K21.03010 | 389 262 2923 | (389 262 0723) | 1 | 1./2.VİTES HALKA | ENGAGING SLEEVE | | | ♦ | ♦ |
| 44 | K21.03025 | 945 262 0434 | (389 262 0034) | 1 | 1.VİTES SENKROMENÇ | ENGAGING RING | | | ♦ | ♦ |
| 45 | K21.03408 | 389 265 2349 | (389 265 1149) | 2 | 1./2.VİTES HİLAL PABUCU | SLIDING PAD | | | ♦ | ♦ |
| | | | (389 265 0849) | | | | | | | |
| | | | (945 265 0249) | | | | | | | |
| 46 | | 389 260 4330 | (389 260 0730) | 1 | 1./ 2.VİTES HİLALİ | SHIFTING FORK | | | ♦ | ♦ |
| 47 | | 389 265 3604 | | 1 | 1./ 2.VİTES HİLAL ÇITASI | SHIFTING ROD | | | ♦ | ♦ |

NOTES :
Parts encoded alphabetic and numaric are used together.

NOTLAR :
Alfabetik ve rakam ile kodlanan parçalar birlikte kullanılır.





Original parts names, oem numbers, symbols and descriptions used in this catalogue are for reference purposes only.

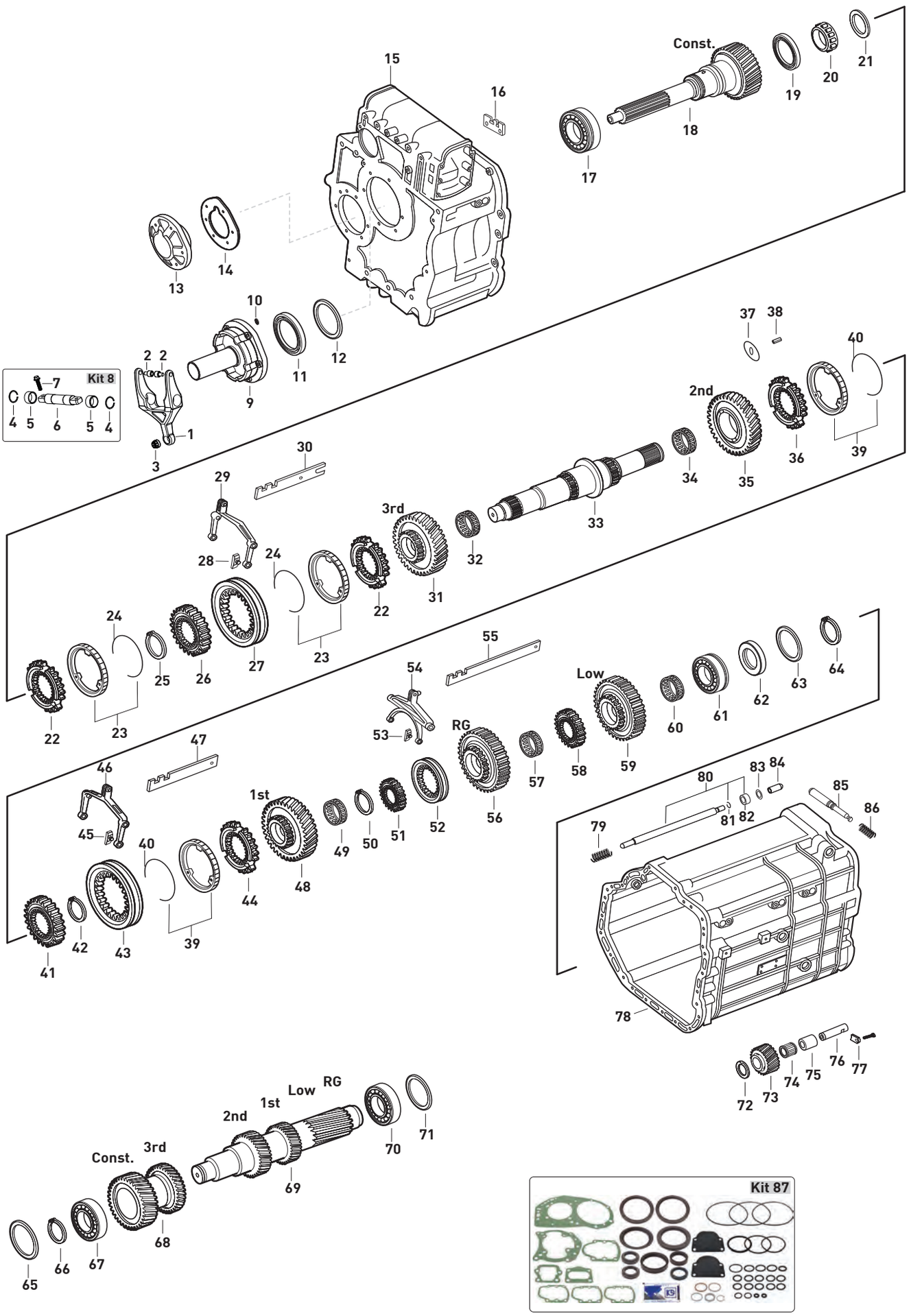




Original parts names, oem numbers, symbols and descriptions used in this catalogue are for reference purposes only.

| Fig. | Kacmaz No | Oem No | Oem Old No | Pcs. | Ürün Tanımı | Description | Sizes | Not | G155-9/15,9 | GO210-8/11,8 EPS |
|---|---|---|---|---|---|---|---|---|---|---|
| 48 | K21.03352 | 389 262 1711 | | 1 | 1.VİTES DİŞLİSİ 41 DİŞ | GEAR 1st 41 T. | | | ♦ | ♦ |
| 49 | K21.03817 | 019 981 4410 | (007 981 4210) | 1 | 1.VİTES MASURA BİLYA | NEEDLE CAGE | 75X83X55mm | | ♦ | ♦ |
| | | | (008 981 8310) | | | | | | | |
| | | | (009 981 0010) | | | | | | | |
| 50 | K21.04336 | 387 262 0473 | | 1 | R./C.VİTES YILDIZ DİŞLİ SEKMANI | RETAINING RING | 2,40mm | | ♦ | ♦ |
| 50 | K21.07018 | 387 262 0573 | | 1 | R./C.VİTES YILDIZ DİŞLİ SEKMANI | RETAINING RING | 2,45mm | | ♦ | ♦ |
| 50 | K21.04352 | 387 262 0673 | | 1 | R./C.VİTES YILDIZ DİŞLİ SEKMANI | RETAINING RING | 2,50mm | | ♦ | ♦ |
| 50 | K21.07019 | 387 262 0773 | | 1 | R./C.VİTES YILDIZ DİŞLİ SEKMANI | RETAINING RING | 2,55mm | | ♦ | ♦ |
| 50 | K21.04337 | 387 262 0873 | | 1 | R./C.VİTES YILDIZ DİŞLİ SEKMANI | RETAINING RING | 2,60mm | | ♦ | ♦ |
| 50 | K21.06929 | 387 262 0973 | | 1 | R./C.VİTES YILDIZ DİŞLİ SEKMANI | RETAINING RING | 2,65mm | | ♦ | ♦ |
| 50 | K21.06669 | 387 262 7673 | | 1 | R./C.VİTES YILDIZ DİŞLİ SEKMANI | RETAINING RING | 2,70mm | | ♦ | ♦ |
| 50 | K21.07020 | 387 262 7773 | | 1 | R./C.VİTES YILDIZ DİŞLİ SEKMANI | RETAINING RING | 2,75mm | | ♦ | ♦ |
| 50 | K21.06930 | 387 262 7873 | | 1 | R./C.VİTES YILDIZ DİŞLİ SEKMANI | RETAINING RING | 2,80mm | | ♦ | ♦ |
| 51 | K21.03353 | 389 262 0435 | | 1 | GERİ VİTES YILDIZ DİŞLİ 37 DİŞ | SYNCHRONIZER HUB 37 T. | | | ♦ | |
| 51 | | 389 262 2135 | | 1 | GERİ VİTES YILDIZ DİŞLİ | SYNCHRONIZER HUB | | | | ♦ |
| 52 | K21.03354 | 389 262 0223 | | 1 | GERİ VİTES HALKASI | ENGAGING SLEEVE | | | ♦ | |
| 52 | K21.03061 | 389 262 1823 | (389 262 0923) | 1 | GERİ VİTES HALKASI | ENGAGING SLEEVE | | | | ♦ |
| 53 | K21.03410 | 947 265 0249 | (945 265 0149) | 2 | GERİ VİTES HİLAL PABUCU | SLIDING PAD | | | ♦ | ♦ |
| 54 | | 389 260 4730 | (389 260 1630) | 1 | GERİ VİTES HİLALİ | SHIFTING FORK | | | ♦ | ♦ |
| 55 | | 389 265 3704 | | 1 | GERİ VİTES HİLAL ÇITASI | SHIFTING ROD | | | ♦ | ♦ |
| 56 | K21.03355 | 389 262 0533 | | 1 | GERİ VİTES DİŞLİSİ 36 DİŞ | REVERSE GEAR 36 T. | | | ♦ | |
| 56 | | 389 262 1833 | | 1 | GERİ VİTES DİŞLİSİ 36 DİŞ | REVERSE GEAR 36 T. | | | | ♦ |
| 57 | K21.03831 | 013 981 5310 | (013 981 5710) | 1 | GERİ VİTES MASURA BİLYA | NEEDLE BEARING | 88X100X42mm | | ♦ | |
| 58 | K21.03356 | 389 262 0040 | | 1 | C VİTES YILDIZ DİŞLİ 37 DİŞ | SYNCHRONIZER HUB 37 T. | | | ♦ | |
| 58 | | 389 262 0140 | | 1 | C VİTES YILDIZ DİŞLİ 37 DİŞ | SYNCHRONIZER HUB 37 T. | | | | ♦ |
| 59 | K21.03357 | 389 262 0211 | | 1 | C VİTES DİŞLİSİ 39 DİŞ | CRAWLING GEAR 39 T. | | | ♦ | |
| 60 | | 013 981 5210 | (013 981 6510) | 1 | C VİTES MASURA BİLYA | NEEDLE BEARING | 60X72X70mm | | ♦ | ♦ |
| 61 | K21.06277 | 012 981 3905 | | 1 | KAMALI MİL ARKA BİLYA | ROLLER BEARING | 60X130X33,2mm | (K) | ♦ | ♦ |
| 61 | K21.03623 | 014 981 6105 | (016 981 1305) | 1 | KAMALI MİL ARKA BİLYA | ROLLER BEARING | 60X130X33,2mm | | ♦ | ♦ |
| | | | (014 981 7505) | | | | | | | |
| 62 | K21.04131 | 389 262 3754 | | 1 | KAMALI MİL ARKA BİLYA PULU | THRUST WASHER | 18mm | (K) | ♦ | ♦ |
| 62 | | 389 262 0152 | | 1 | KAMALI MİL ARKA BİLYA PULU | THRUST WASHER | 20,3mm | | ♦ | ♦ |
| 63 | K21.04182 | 389 262 3552 | | 1 | KAMALI MİL ARKA BİLYA RAYNELİ | THRUST WASHER | 0,10mm | | ♦ | ♦ |
| 63 | K21.04184 | 389 262 3652 | | 1 | KAMALI MİL ARKA BİLYA RAYNELİ | THRUST WASHER | 0,15mm | | ♦ | ♦ |
| 63 | K21.04152 | 389 262 3752 | | 1 | KAMALI MİL ARKA BİLYA RAYNELİ | THRUST WASHER | 0,20mm | | ♦ | ♦ |
| 63 | K21.94152 | | | 1 | KAMALI MİL ARKA BİLYA RAYNELİ | THRUST WASHER | 0,30mm | | ♦ | ♦ |
| 63 | K21.04183 | 389 262 3852 | | 1 | KAMALI MİL ARKA BİLYA RAYNELİ | THRUST WASHER | 0,40mm | | ♦ | ♦ |
| 63 | K21.94183 | | | 1 | KAMALI MİL ARKA BİLYA RAYNELİ | THRUST WASHER | 0,50mm | | ♦ | ♦ |
| 63 | K21.04185 | 389 262 3952 | | 1 | KAMALI MİL ARKA BİLYA RAYNELİ | THRUST WASHER | 0,80mm | | ♦ | ♦ |
| 63 | K21.06718 | 010 990 8382 | | 1 | KAMALI MİL ARKA BİLYA RAYNELİ | THRUST WASHER | 1,00mm | | ♦ | ♦ |
| 64 | K21.04331 | 007 994 1841 | (006 994 9941) | 1 | KAMALI MİL ARKA BİLYA SEKMANI | RETAINING RING | 2,50mm | | ♦ | ♦ |
| 64 | | 006 994 7341 | | 1 | KAMALI MİL ARKA BİLYA SEKMANI | RETAINING RING | | | ♦ | ♦ |
| 65 | K21.04192 | 406 337 0252 | | 1 | GRUP MİLİ ÖN BİLYA RAYNELİ | THRUST WASHER | 0,10mm | | ♦ | ♦ |
| 65 | K21.04150 | 406 337 0352 | | 1 | GRUP MİLİ ÖN BİLYA RAYNELİ | THRUST WASHER | 0,20mm | | ♦ | ♦ |
| 65 | K21.94150 | | | 1 | GRUP MİLİ ÖN BİLYA RAYNELİ | THRUST WASHER | 0,25mm | | ♦ | ♦ |
| 65 | K21.04338 | 406 337 0452 | | 1 | GRUP MİLİ ÖN BİLYA RAYNELİ | THRUST WASHER | 0,30mm | | ♦ | ♦ |
| 65 | K21.04196 | 389 263 5352 | (389 263 3252) | 1 | GRUP MİLİ ÖN BİLYA RAYNELİ | THRUST WASHER | 0,40mm | | ♦ | ♦ |
| 65 | K21.04194 | 389 263 3352 | | 1 | GRUP MİLİ ÖN BİLYA RAYNELİ | THRUST WASHER | 0,45mm | | ♦ | ♦ |
| 65 | K21.06719 | 389 263 5652 | | 1 | GRUP MİLİ ÖN BİLYA RAYNELİ | THRUST WASHER | 0,49mm | | ♦ | ♦ |
| 65 | K21.04197 | 389 263 5852 | (389 263 3552) | 1 | GRUP MİLİ ÖN BİLYA RAYNELİ | THRUST WASHER | 0,55mm | | ♦ | ♦ |
| 65 | K21.04340 | 389 263 6052 | | 1 | GRUP MİLİ ÖN BİLYA RAYNELİ | THRUST WASHER | 0,61mm | | ♦ | ♦ |
| 65 | K21.04198 | 389 263 6352 | (389 263 3852) | 1 | GRUP MİLİ ÖN BİLYA RAYNELİ | THRUST WASHER | 0,70mm | | ♦ | ♦ |
| 65 | K21.04154 | 389 263 3952 | | 1 | GRUP MİLİ ÖN BİLYA RAYNELİ | THRUST WASHER | 0,75mm | | ♦ | ♦ |

NOTES :
Parts encoded alphabetic and numaric are used together.

NOTLAR :
Alfabetik ve rakam ile kodlanan parçalar birlikte kullanılır.





Original parts names, oem numbers, symbols and descriptions used in this catalogue are for reference purposes only.

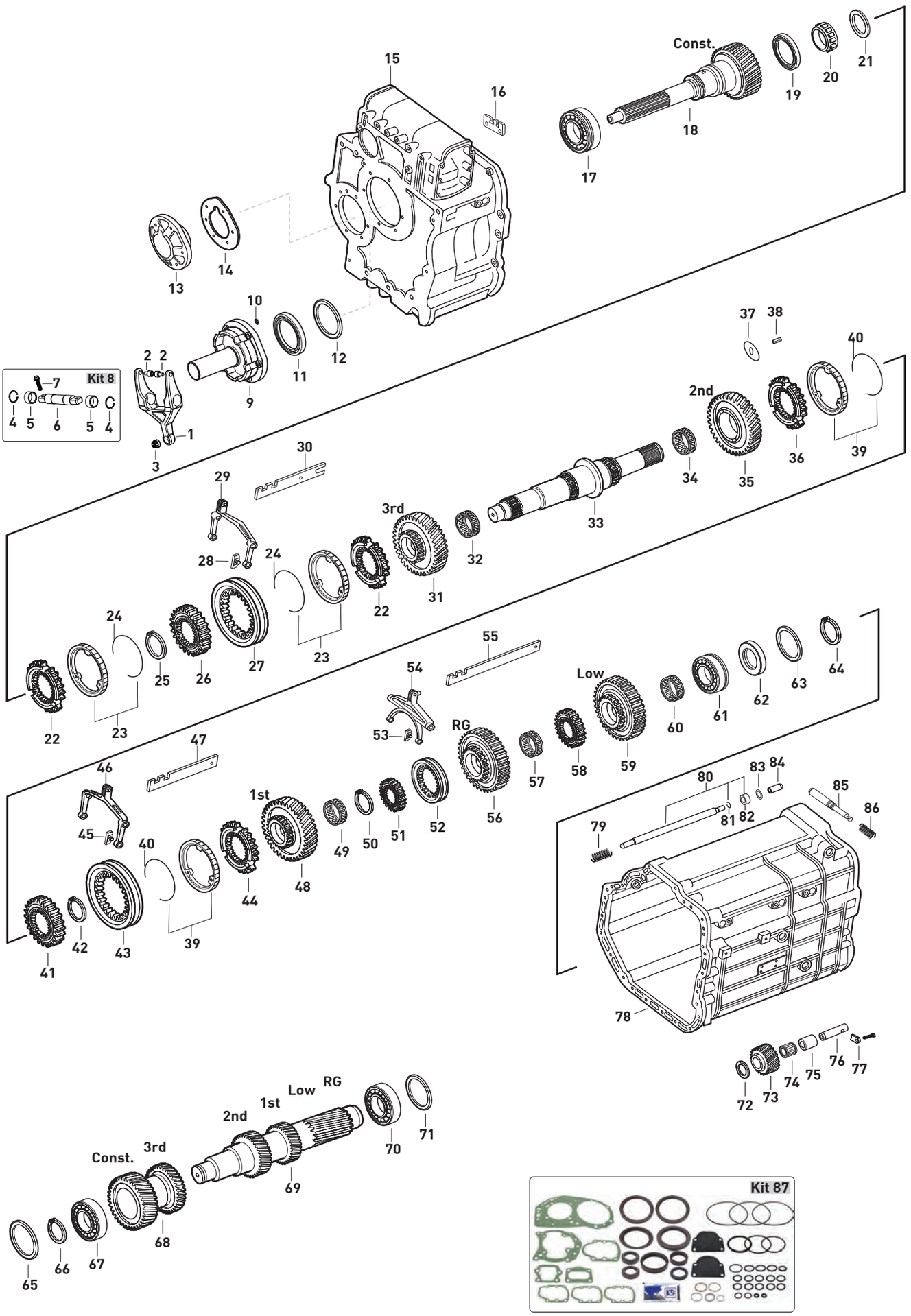




Original parts names, oem numbers, symbols and descriptions used in this catalogue are for reference purposes only.

| Fig. | Kacmaz No | Oem No | Oem Old No | Pcs. | Ürün Tanımı | Description | Sizes | Not | G155-9/15,9 | GO210-8/11,8 EPS | | |
|---|---|---|---|---|---|---|---|---|---|---|---|---|
| 65 | K21.04199 | 389 263 6852 | | 1 | GRUP MİLİ ÖN BİLYA RAYNELİ | THRUST WASHER | 0,85mm | | ♦ | ♦ | | |
| 65 | K21.04200 | 389 263 7352 | | 1 | GRUP MİLİ ÖN BİLYA RAYNELİ | THRUST WASHER | 1,00mm | | ♦ | ♦ | | |
| 65 | K21.04201 | 389 263 7852 | | 1 | GRUP MİLİ ÖN BİLYA RAYNELİ | THRUST WASHER | 1,15mm | | ♦ | ♦ | | |
| 65 | K21.04202 | 389 263 8352 | | 1 | GRUP MİLİ ÖN BİLYA RAYNELİ | THRUST WASHER | 1,30mm | | ♦ | ♦ | | |
| 66 | K21.07029 | 387 994 1541 | | 1 | GRUP MİLİ ÖN BİLYA SEKMANI | RETAINING RING | 2,35mm | | ♦ | ♦ | | |
| 66 | K21.07030 | 387 994 1341 | | 1 | GRUP MİLİ ÖN BİLYA SEKMANI | RETAINING RING | 2,45mm | | ♦ | ♦ | | |
| 66 | K21.07031 | 387 994 1141 | | 1 | GRUP MİLİ ÖN BİLYA SEKMANI | RETAINING RING | 2,55mm | | ♦ | ♦ | | |
| 66 | K21.07032 | 387 994 0941 | | 1 | GRUP MİLİ ÖN BİLYA SEKMANI | RETAINING RING | 2,65mm | | ♦ | ♦ | | |
| 66 | K21.07033 | 387 994 0741 | | 1 | GRUP MİLİ ÖN BİLYA SEKMANI | RETAINING RING | 2,75mm | | ♦ | ♦ | | |
| 66 | K21.07034 | 387 994 0541 | | 1 | GRUP MİLİ ÖN BİLYA SEKMANI | RETAINING RING | 2,85mm | | ♦ | ♦ | | |
| 66 | K21.07035 | 387 994 0341 | | 1 | GRUP MİLİ ÖN BİLYA SEKMANI | RETAINING RING | 2,95mm | | ♦ | ♦ | | |
| 67 | K21.03606 | 015 981 9005 | (014 981 1405) | 1 | GRUP MİLİ ÖN BİLYA | ROLLER BEARING | 50,8X100X35mm | | ♦ | ♦ | | |
| | | | (012 981 7405) | | | | | | | | | |
| | | | (012 981 5105) | | | | | | | | | |
| 68 | K21.03358 | 389 263 1113 | | 1 | PRİZ.VE 3.VİTES DİŞ.KARŞILIĞI | DOUBLE GEAR Const./3rd | | | ♦ | ♦ | | |
| 69 | K21.03359 | 389 263 0902 | | 1 | GRUP MİLİ 12/17/21 DİŞ | COUNTER SHAFT 12/17/21 T. | | | ♦ | ♦ | | |
| 70 | K21.03624 | 016 981 1205 | (012 981 9405) | 1 | GRUP MİLİ ARKA BİLYA | ROLLER BEARING | 60X130X33,8mm | | ♦ | ♦ | | |
| | | | (012 981 9205) | | | | | | | | | |
| 71 | K21.06697 | | | 1 | GRUP MİLİ ARKA BİLYA RAYNELİ | THRUST WASHER | 1,30mm | | ♦ | ♦ | | |
| 71 | K21.04232 | 389 263 5052 | | 1 | GRUP MİLİ ARKA BİLYA RAYNELİ | THRUST WASHER | 1,15mm | | ♦ | ♦ | | |
| 71 | K21.04231 | 389 263 4952 | | 1 | GRUP MİLİ ARKA BİLYA RAYNELİ | THRUST WASHER | 1,10mm | | ♦ | ♦ | | |
| 71 | K21.04230 | 389 263 4852 | | 1 | GRUP MİLİ ARKA BİLYA RAYNELİ | THRUST WASHER | 1,05mm | | ♦ | ♦ | | |
| 71 | K21.04229 | 389 263 4752 | | 1 | GRUP MİLİ ARKA BİLYA RAYNELİ | THRUST WASHER | 1,00mm | | ♦ | ♦ | | |
| 71 | K21.04228 | 389 263 4652 | | 1 | GRUP MİLİ ARKA BİLYA RAYNELİ | THRUST WASHER | 0,95mm | | ♦ | ♦ | | |
| 71 | K21.04227 | 389 263 4552 | | 1 | GRUP MİLİ ARKA BİLYA RAYNELİ | THRUST WASHER | 0,90mm | | ♦ | ♦ | | |
| 71 | K21.04226 | 389 263 4452 | | 1 | GRUP MİLİ ARKA BİLYA RAYNELİ | THRUST WASHER | 0,85mm | | ♦ | ♦ | | |
| 71 | K21.04225 | 389 263 0552 | | 1 | GRUP MİLİ ARKA BİLYA RAYNELİ | THRUST WASHER | 0,80mm | | ♦ | ♦ | | |
| 71 | K21.04224 | 389 263 4352 | | 1 | GRUP MİLİ ARKA BİLYA RAYNELİ | THRUST WASHER | 0,75mm | | ♦ | ♦ | | |
| 71 | K21.04155 | 389 263 4252 | | 1 | GRUP MİLİ ARKA BİLYA RAYNELİ | THRUST WASHER | 0,70mm | | ♦ | ♦ | | |
| 71 | K21.04223 | 389 263 4152 | | 1 | GRUP MİLİ ARKA BİLYA RAYNELİ | THRUST WASHER | 0,65mm | | ♦ | ♦ | | |
| 71 | K21.04153 | 389 263 4052 | | 1 | GRUP MİLİ ARKA BİLYA RAYNELİ | THRUST WASHER | 0,60mm | | ♦ | ♦ | | |
| 71 | K21.06695 | | | 1 | GRUP MİLİ ARKA BİLYA RAYNELİ | THRUST WASHER | 0,55mm | | ♦ | ♦ | | |
| 71 | K21.06692 | | | 1 | GRUP MİLİ ARKA BİLYA RAYNELİ | THRUST WASHER | 0,50mm | | ♦ | ♦ | | |
| 71 | K21.06694 | | | 1 | GRUP MİLİ ARKA BİLYA RAYNELİ | THRUST WASHER | 0,45mm | | ♦ | ♦ | | |
| 71 | K21.06693 | 389 263 0452 | | 1 | GRUP MİLİ ARKA BİLYA RAYNELİ | THRUST WASHER | 0,40mm | | ♦ | ♦ | | |
| 71 | K21.04358 | | | 1 | GRUP MİLİ ARKA BİLYA RAYNELİ | THRUST WASHER | 0,30mm | | ♦ | ♦ | | |
| 71 | K21.04357 | | | 1 | GRUP MİLİ ARKA BİLYA RAYNELİ | THRUST WASHER | 0,20mm | | ♦ | ♦ | | |
| 71 | K21.04156 | 389 263 0152 | | 1 | GRUP MİLİ ARKA BİLYA RAYNELİ | THRUST WASHER | 0,10mm | | ♦ | ♦ | | |
| 72 | K21.04209 | 389 263 0062 | | 2 | KÜÇÜK GERİ VİTES PULU | THRUST WASHER | 1,00mm | | ♦ | ♦ | | |
| 73 | | 389 263 1631 | | 1 | KÜÇÜK GERİ VİTES DİŞLİSİ 19 DİŞ | REV.IDLER GEAR 19 T | | (5) | ♦ | ♦ | | |
| 73 | | 389 263 0531 | | 1 | KÜÇÜK GERİ VİTES DİŞLİSİ 19 DİŞ | REV.IDLER GEAR 19 T | | (6) | ♦ | ♦ | | |
| 74 | K21.03838 | 012 981 8910 | (012 981 9010) | 1 | KÜÇÜK GERİ VİTES MASURA BİLYA | NEEDLE CAGE | 42X50X51mm | | ♦ | ♦ | | |
| | | | (019 981 1310) | | | | | | | | | |
| 75 | K21.06031 | 389 263 0850 | | 1 | K.GERİ VİTES MASURA BİLYA ÇANAĞI | BUSHING | 18mm | (5) | ♦ | ♦ | | |
| 75 | | 389 263 0050 | | 1 | K.GERİ VİTES MASURA BİLYA ÇANAĞI | BUSHING | 19mm | (6) | ♦ | ♦ | | |
| 76 | | 389 263 0330 | | 1 | KÜÇÜK GERİ VİTES PİMİ | PIN | | | ♦ | ♦ | | |
| 77 | K21.07010 | 945 263 0041 | | 1 | KÜÇÜK GERİ VİTES PİM KİLİTLEMESİ | KEY | | | ♦ | ♦ | | |
| 78 | | 389 261 7303 | | 1 | ŞANZIMAN ORTA GÖVDE | HOUSING | | | ♦ | ♦ | | |
| 79 | | 389 993 0501 | | 1 | KİLİTLEME MİL YAYI | SPRING | | | ♦ | | | |
| 80 | | 389 268 4925 | | 1 | KİLİTLEME MİLİ | SHIFTING ROD | | | ♦ | | | |
| 81 | | 007993 012200 | | 1 | KİLİTLEME MİLİ SEKMANI | RETAINING RING | | | ♦ | | | |
| 82 | | 389 268 0051 | | 1 | KİLİTLEME MİL BURCU | SPACER RING | | | ♦ | | | |
| 83 | | 000998 006019 | | 1 | KİLİTLEME MİLİ AYAR RAYNELİ | FITTED WASHER | 0,10mm | | ♦ | | | |

NOTES :
Parts encoded alphabetic and numaric are used together.

NOTLAR :
Alfabetik ve rakam ile kodlanan parçalar birlikte kullanılır.





Original parts names, oem numbers, symbols and descriptions used in this catalogue are for reference purposes only.

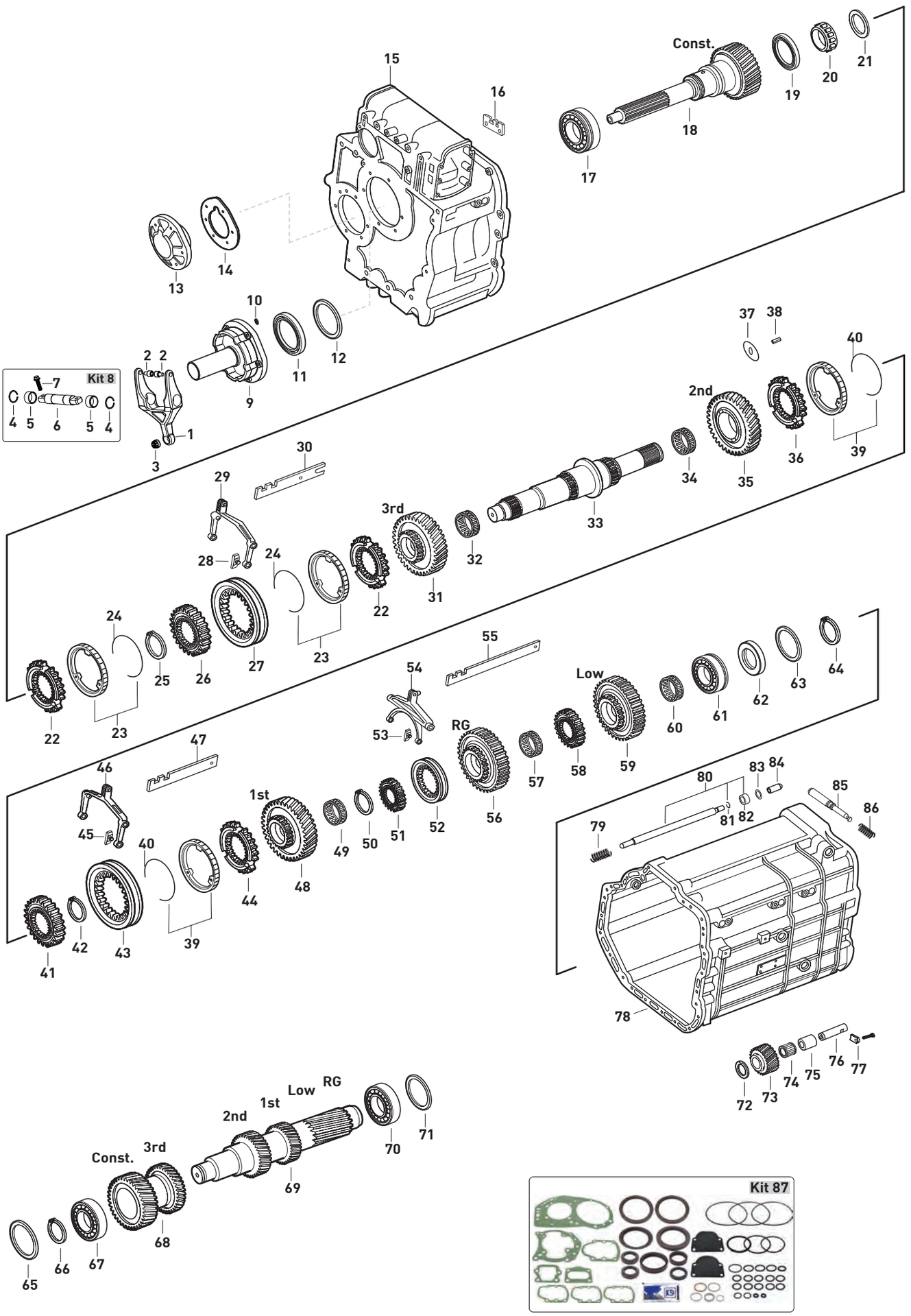




Original parts names, oem numbers, symbols and descriptions used in this catalogue are for reference purposes only.

| Fig. | Kacmaz No | Oem No | Oem Old No | Pcs. | Ürün Tanımı | Description | Sizes | Not | G155-9/15,9 | GO210-8/11,8 EPS |
|---|---|---|---|---|---|---|---|---|---|---|
| 83 | | 000998 006020 | | 1 | KİLİTLEME MİLİ AYAR RAYNELİ | FITTED WASHER | 0,20mm | | ♦ | |
| 83 | | 000988 006021 | | 1 | KİLİTLEME MİLİ AYAR RAYNELİ | FITTED WASHER | 0,30mm | | ♦ | |
| 83 | | 000988 006013 | | 1 | KİLİTLEME MİLİ AYAR RAYNELİ | FITTED WASHER | 0,50mm | | ♦ | |
| 83 | | 000988 006001 | | 1 | KİLİTLEME MİLİ AYAR RAYNELİ | FITTED WASHER | 1,00mm | | ♦ | |
| 84 | K21.03489 | 389 268 0674 | | 1 | KİLİTLEME MİL FİŞEĞİ | PIN | | | ♦ | |
| 85 | K21.03486 | 389 267 0974 | | 1 | AĞIR SERİ KİLİTLEME MİLİ | PIN | | | ♦ | |
| 86 | K21.06006 | 389 993 3401 | (389 993 0601) | 1 | AĞIR SERİ KİLİTLEME YAYI | SPRING | | | ♦ | |
| 87 | K21.03543 | | | Kit | CONTA TAKIMI | GASKET KIT | | | ♦ | ♦ |

NOTES :
Parts encoded alphabetic and numaric are used together.

NOTLAR :
Alfabetik ve rakam ile kodlanan parçalar birlikte kullanılır.





Original parts names, oem numbers, symbols and descriptions used in this catalogue are for reference purposes only.

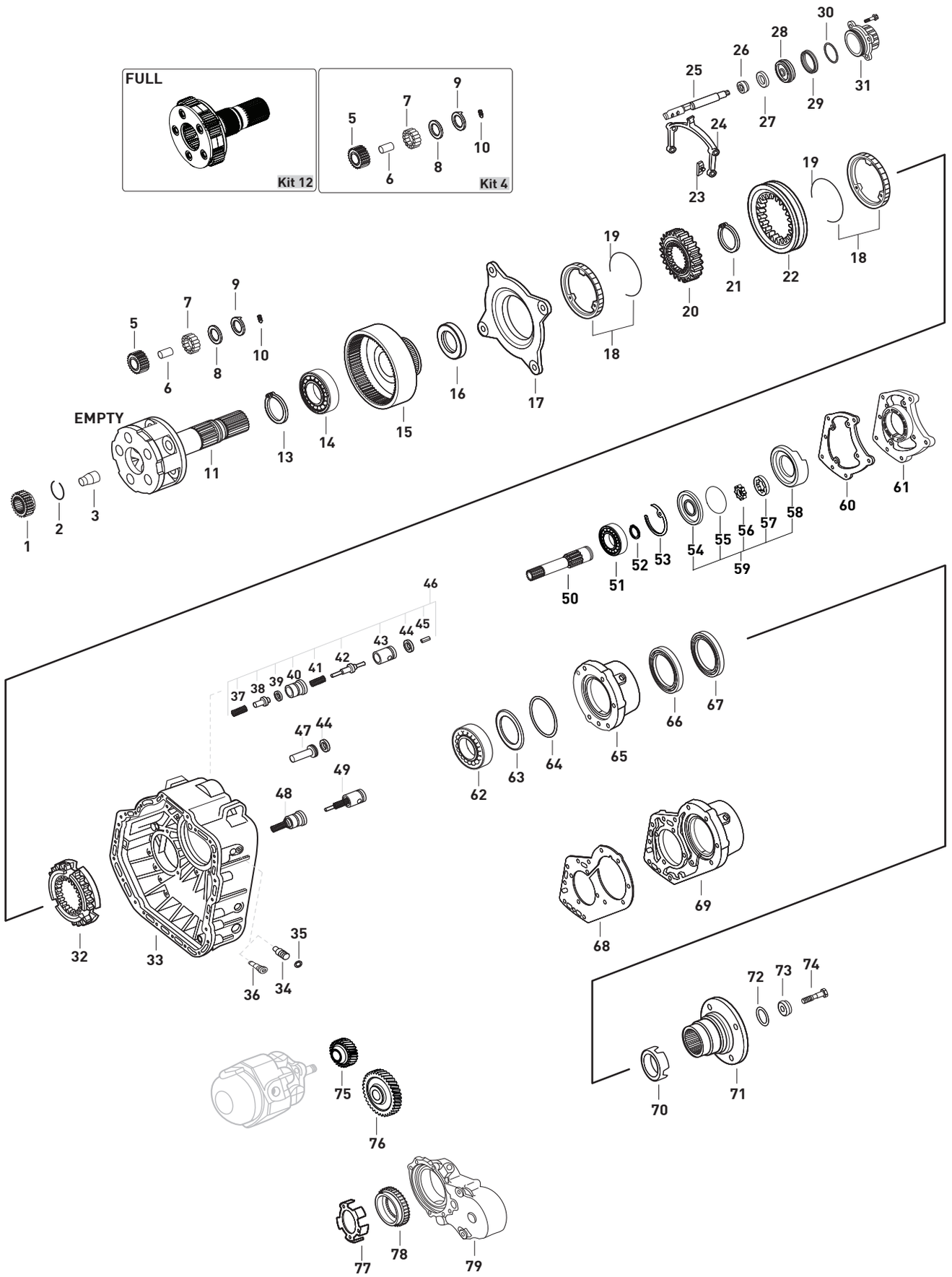






Original parts names, oem numbers, symbols and descriptions used in this catalogue are for reference purposes only.

| Fig. | Kacmaz No | Oem No | Oem Old No | Pcs. | Ürün Tanımı | Description | Sizes | Not | G155-9/15,9 | GO210-8/11,8 EPS |
|---|---|---|---|---|---|---|---|---|---|---|
| 1 | K21.03113 | 389 262 0209 | | 1 | GÜNEŞ DİŞLİ 25 DİŞ | SUN GEAR 25 T. | | (A) | ♦ | ♦ |
| 1 | K21.03014 | 389 262 0409 | | 1 | GÜNEŞ DİŞLİ 25 DİŞ | SUN GEAR 25 T . | | (B) | ♦ | ♦ |
| 1 | K21.03127 | 389 262 0009 | | 1 | GÜNEŞ DİŞLİ 25 DİŞ | SUN GEAR 25 T. | | (C) | ♦ | ♦ |
| 2 | | 007993 040200 | | 1 | ŞANZ.HEYKEL YAĞ BORU SEKMANI | SNAP RING | | | ♦ | ♦ |
| 3 | | 389 269 0134 | | 1 | ŞANZ.HEYKEL YAĞ BORUSU | OIL TUBE | | | ♦ | ♦ |
| 4 | K21.03123 | 389 260 0497 | | 1 | HEYKEL KOZA DİŞLİ TAKIMI | PLANETARY GEAR SET | | (A) | ♦ | ♦ |
| 4 | K21.03124 | 389 260 0297 | | 1 | HEYKEL KOZA DİŞLİ TAKIMI | PLANETARY GEAR SET | | (B) | ♦ | ♦ |
| 4 | | 389 260 0097 | | 1 | HEYKEL KOZA DİŞLİ TAKIMI | PLANETARY GEAR SET | | (C) | ♦ | ♦ |
| 5 | K21.06034 | 389 262 0906 | | 5 | HEYKEL KOZA DİŞLİ 26 DİŞ | PLANETARY GEAR 26 T. | | (A) | ♦ | ♦ |
| 6 | K21.03437 | 389 262 0407 | | 5 | HEYKEL KOZA DİŞLİ PİMİ | PLANETARY GEAR PIN | | (A) | ♦ | ♦ |
| 7 | K21.03816 | 000 981 4186 | (000 981 4386) | 125 | HEYKEL KOZA DİŞLİ TANE BİLYA | NEEDLE ROLLER | D5X39,6 | (A) | ♦ | ♦ |
| 7 | K21.03836 | 001 981 2787 | (001 981 2887) | 125 | HEYKEL KOZA DİŞLİ TANE BİLYA | NEEDLE ROLLER | D5X36,8 | (B)(C) | ♦ | ♦ |
| | | | (001 981 2987) | | | | | | | |
| 8 | K21.04074 | 389 262 0162 | (389 262 6462) | 10 | HEYKEL KOZA DİŞLİ PULU | THRUST WASHER | | | ♦ | ♦ |
| | | | (389 262 0562) | | | | | | | |
| 9 | K21.06982 | 389 262 0262 | | 10 | HEYKEL KOZA DİŞLİ PULU | THRUST WASHER | | | ♦ | ♦ |
| 10 | K21.03418 | 000914 006109 | | 5 | HEYKEL KOZA DİŞLİ VİDASI | THREADED PIN | M6X14 | | ♦ | ♦ |
| 11 | K21.03125 | 389 260 9061 | (389 260 8961) | 1 | ŞANZIMAN HEYKELİ (BOŞ) | PLANETARY CARRIER (EMPTY) | | (A) | ♦ | ♦ |
| | | | (389 260 7661) | | | | | | | |
| | | | (389 260 1361) | | | | | | | |
| 11 | K21.03360 | 389 260 0661 | | 1 | ŞANZIMAN HEYKELİ (BOŞ) | PLANETARY CARRIER (EMPTY) | | (B)(C) | ♦ | ♦ |
| 12 | K21.03682 | | | Kit | ŞANZIMAN HEYKELİ (DOLU) | PLANETARY CARRIER (FULL) | | (A) | ♦ | ♦ |
| 13 | K21.06864 | 000472 130000 | | 1 | ÇEMBER DİŞLİ BİLYA SEKMANI | RETAINING RING | 130X4mm | | ♦ | ♦ |
| 14 | K21.03614 | 008 981 1325 | (004 981 8725) | 1 | ÇEMBER DİŞLİ BİLYASI | ROLLER BEARING | 90X130X14mm | | ♦ | ♦ |
| | | | (004 981 8825) | | | | | | | |
| | | | (004 981 9425) | | | | | | | |
| 15 | K21.03425 | 389 262 0208 | | 1 | ÇEMBER DİŞLİ 80 DİŞ | RING GEAR 80 T. | | | ♦ | ♦ |
| 16 | K21.04076 | 389 262 0251 | | 1 | ŞANZIMAN HEYKELİ ARA PULU | SPACER RING | | | ♦ | ♦ |
| 17 | K21.03018 | 389 260 2036 | | 1 | TABLA SENKROMENÇ | FOLLOWER RING | | (1) | ♦ | ♦ |
| 17 | K21.03076 | 389 260 0936 | | 1 | TABLA SENKROMENÇ | FOLLOWER RING | | (2) | ♦ | ♦ |
| 18 | K21.03017 | 389 262 0537 | (389 262 0037) | 2 | AĞIR SERİ FRENLEME (Mo) | SYNCHRONIZING CONE / Mo | | | ♦ | ♦ |
| | | | (389 262 0137) | | | | | | | |
| | | | (389 262 3337) | | | | | | | |
| 18 | K21.03078 | 945 260 0850 | | 2 | AĞIR SERİ FRENLEME (C) | SYNCHRONIZING CONE / C | | | ♦ | ♦ |
| 19 | K21.03077 | 389 262 0293 | | 2 | FRENLEME TELİ | SPRING | | | ♦ | ♦ |
| 20 | K21.03079 | 389 262 4935 | (389 262 2035) | 1 | AĞIR SERİ YILDIZ DİŞLİ 73 DİŞ | SYNCHRONIZER HUB 73 T. | | (1) | ♦ | ♦ |
| | | | (400 262 0335) | | | | | | | |
| 20 | K21.03081 | 389 262 0535 | | 1 | AĞIR SERİ YILDIZ DİŞLİ 72 DİŞ | SYNCHRONIZER HUB 72 T. | | (2) | ♦ | ♦ |
| 21 | K21.04356 | 000471 120000 | | 1 | AĞIR SERİ YILDIZ DİŞLİ SEKMANI | RETAINING RING | | | ♦ | ♦ |
| 22 | K21.03028 | 945 262 6623 | (945 262 0823) | 1 | AĞIR SERİ HALKA 73 DİŞ | ENGAGING SLEEVE 73 T. | | (1) | ♦ | ♦ |
| | | | (389 262 1623) | | | | | | | |
| | | | (389 262 3823) | | | | | | | |
| | | | (945 262 2623) | | | | | | | |
| 22 | K21.03420 | 389 262 1523 | (389 262 0123) | 1 | AĞIR SERİ HALKA 72 DİŞ | ENGAGING SLEEVE 72 T. | | (2) | ♦ | ♦ |
| 23 | K21.03406 | 389 265 2449 | (945 265 0349) | 2 | AĞIR SERİ HİLAL PABUCU | SLIDING PAD | | | ♦ | ♦ |
| | | | (387 265 0049) | | | | | | | |
| | | | (389 265 0949) | | | | | | | |
| | | | (389 265 1249) | | | | | | | |
| 24 | K21.06411 | 947 265 1701 | (389 265 0901) | 1 | AĞIR SERİ HİLALİ | SHIFTING FORK | | | ♦ | ♦ |
| | | | (930 265 0001) | | | | | | | |
| | | | (947 265 0801) | | | | | | | |
| 25 | | 389 267 7217 | (389 267 3917) | 1 | AĞIR SERİ HİLALİ MİLİ | SHIFTING ROD | | MPS | ♦ | ♦ |
| 26 | K21.03523 | 000 267 0197 | (000 267 0397) | 1 | AĞIR SERİ HİLAL MİL KEÇESİ | OIL SEAL | 22X32X8mm | | ♦ | ♦ |

NOTES :
Parts encoded alphabetic and numaric are used together.

NOTLAR :
Alfabetik ve rakam ile kodlanan parçalar birlikte kullanılır.





Original parts names, oem numbers, symbols and descriptions used in this catalogue are for reference purposes only.

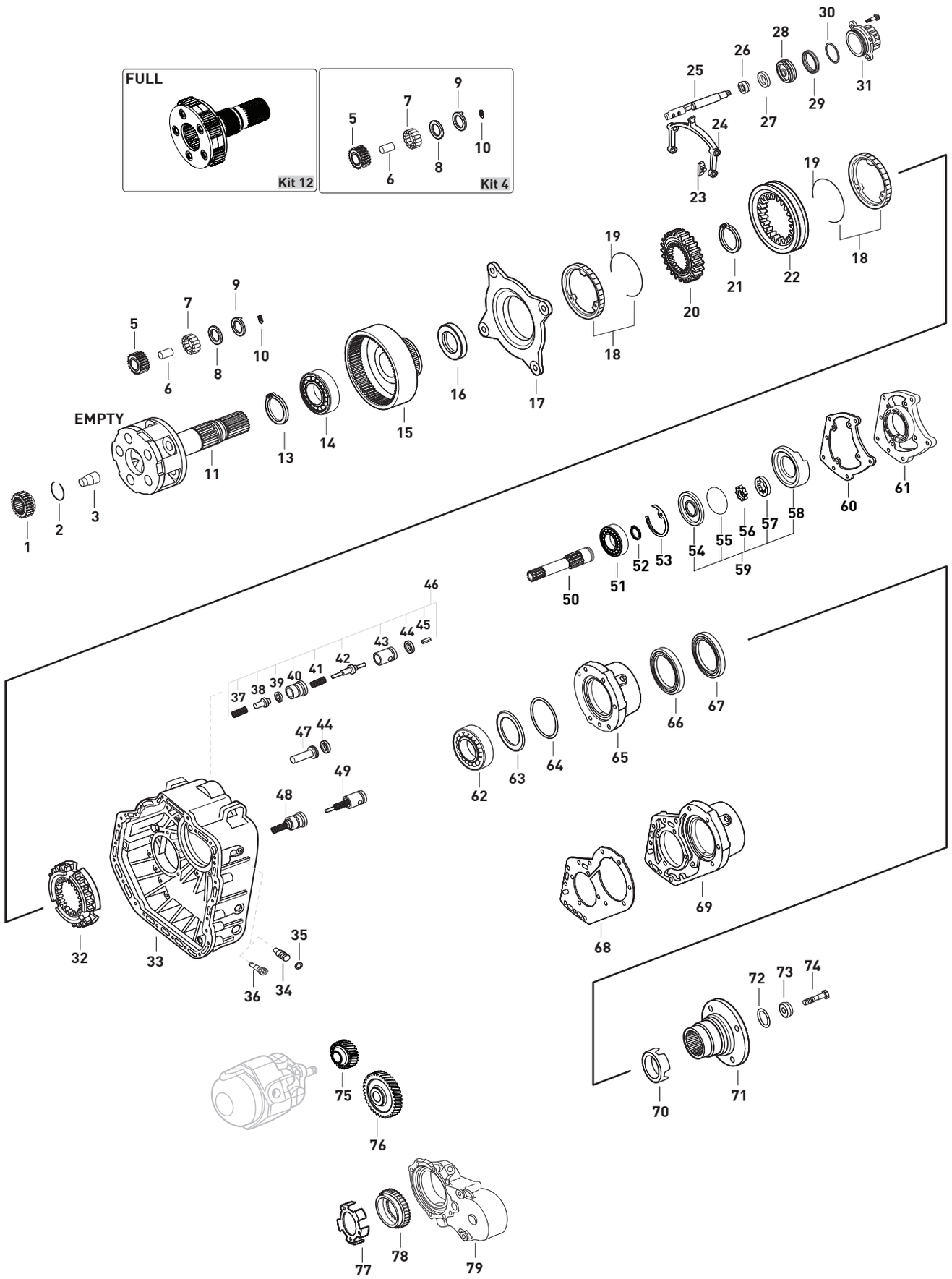




Original parts names, oem numbers, symbols and descriptions used in this catalogue are for reference purposes only.

| Fig. | Kacmaz No | Oem No | Oem Old No | Pcs. | Ürün Tanımı | Description | Sizes | Not | G155-9/15,9 | GO210-8/11,8 EPS |
|---|---|---|---|---|---|---|---|---|---|---|
| 27 | K21.04178 | 387 267 0650 | (387 267 0250) | 1 | HİLAL MİL BURCU | BUSHING | 34X22X8mm | | ♦ | ♦ |
| 28 | K21.06975 | 960 267 0818 | (389 267 1018) | 1 | AĞIR SERİ HİLAL MİL PİSTONU | PISTON | | | ♦ | ♦ |
| | | | (389 267 0118) | | | | | | | |
| 29 | K21.03525 | 024 997 8347 | (020 997 6747) | 1 | AĞIR SERİ SİLİNDİR KEÇESİ | SEAL RING | 77X90X17mm | | ♦ | ♦ |
| | | | (014 997 3647) | | | | | | | |
| | | | (014 997 5147) | | | | | | | |
| 30 | K21.06399 | 013 997 7548 | | 1 | AĞIR SERİ SİLİNDİR ORİNGİ | O-RING | 89,5X3mm | | ♦ | ♦ |
| 31 | K21.06469 | 389 267 1419 | | 1 | AĞIR SERİ SİLİNDİRİ | SHIFTING CYLINDER | | | ♦ | ♦ |
| 32 | K21.03022 | 389 262 9134 | | 1 | SERİ SENKROMENÇ | ENGAGING RING | | (1) | ♦ | ♦ |
| 32 | K21.03020 | 389 262 4034 | | 1 | SERİ SENKROMENÇ | ENGAGING RING | | (2) | ♦ | ♦ |
| 32 | K21.03082 | 389 262 2334 | (389 262 1934) | 1 | SERİ SENKROMENÇ | ENGAGING RING | | (2) | ♦ | ♦ |
| | | | (389 262 0934) | | | | | | | |
| 33 | | 389 261 5126 | (389 261 4926) | 1 | ŞANZIMAN ARKA GÖVDE | HOUSING | | (1) | ♦ | ♦ |
| 33 | | 389 261 4603 | (389 261 2703) | 1 | ŞANZIMAN ARKA GÖVDE | HOUSING | | (2) | ♦ | ♦ |
| 34 | | 389 265 0974 | | 2 | AĞIR SERİ HİLAL CİVATASI | PIN | | (2) | ♦ | ♦ |
| 35 | K21.04212 | 013 997 0048 | (020 997 8248) | 2 | HİLAL CİVATA ORİNGİ | O-RING | 19,2X3mm | (2) | ♦ | ♦ |
| 36 | K21.06026 | 945 265 3074 | (945 265 1474) | 2 | AĞIR SERİ HİLAL CİVATASI | PIN | | (1) | ♦ | ♦ |
| | | | (945 265 1774) | | | | | | | |
| | | | (945 265 2674) | | | | | | | |
| 37 | | 389 993 5301 | | 1 | YAĞ BASINÇ YAYI | SPRING | | | ♦ | ♦ |
| 38 | | 389 269 1026 | (389 269 0926) | 1 | YAĞ BASINÇ VALFİ | SELECTOR VALVE | | | ♦ | ♦ |
| 39 | K21.04210 | 013 997 0148 | (020 997 8348) | 1 | YAĞ BASINÇ ORİNGİ | O-RING | 13,3X2,4mm | | ♦ | ♦ |
| 40 | | 389 269 1444 | (389 269 0744) | 1 | YAĞ BASINÇ VALF GÖVDESİ | VALVE INSERT | | | ♦ | ♦ |
| 41 | | 389 993 4401 | | 1 | YAĞ BASINÇ VALF MİL YAYI | SPRING | 11,5X41,9X1mm | | ♦ | ♦ |
| 42 | | 389 269 0826 | | 1 | YAĞ BASINÇ VALF MİLİ | SELECTOR VALVE | | | ♦ | ♦ |
| 43 | | 389 269 0844 | | 1 | YAĞ BASINÇ VALF TOPU | BALL | | | ♦ | ♦ |
| 44 | K21.04212 | 013 997 0048 | (020 997 8248) | 1 | YAĞ BASINÇ VALF ORİNGİ | O-RING | 19,2X3mm | | ♦ | ♦ |
| 45 | | 001481 004001 | (001481 004049) | 1 | EMNİYET PİMİ | CLAMPING SLEEVE | | | ♦ | ♦ |
| 46 | K21.06962 | 655 260 0157 | | Kit | YAĞ BASINÇ VALFİ KOMPLE | VALVE KIT | | | ♦ | ♦ |
| 47 | K21.06979 | 389 265 0176 | (389 265 0076) | 1 | YAĞ BASINÇ VALFİ ALIN FİBERİ | WASHER | | | ♦ | ♦ |
| 48 | K21.06953 | 960 260 1057 | | Kit | YAĞ BASINÇ VALFİ KOMPLE | VALVE KIT | | | ♦ | ♦ |
| 49 | K21.06973 | 960 260 1257 | | Kit | YAĞ BASINÇ VALFİ KOMPLE | VALVE KIT | | | ♦ | ♦ |
| 50 | K21.03085 | 947 264 0005 | (389 269 0310) | 1 | YAĞ POMPA MİLİ | OIL PUMP SHAFT | | | ♦ | ♦ |
| | | | (389 269 1210) | | | | | | | |
| 51 | K21.03613 | 004 981 9225 | (004 981 8625) | 1 | PTO MİL BİLYASI | ROLLER BEARING | 45X75X16mm | | ♦ | ♦ |
| | | | (004 981 9025) | | | | | | | |
| 52 | K21.06964 | 000471 045000 | (003 994 3741) | 1 | PTO MİL BİLYA SEKMANI | RETAINING RING | 1,75mm | | ♦ | ♦ |
| 53 | K21.94304 | | | 1 | YAĞ POMPA PULU | SPACER WASHER | 0,70mm | | ♦ | ♦ |
| 53 | K21.04304 | 389 262 6254 | | 1 | YAĞ POMPA PULU | SPACER WASHER | 0,80mm | | ♦ | ♦ |
| 53 | K21.04303 | 389 262 5954 | | 1 | YAĞ POMPA PULU | SPACER WASHER | 0,90mm | | ♦ | ♦ |
| 53 | K21.04302 | 389 262 5754 | | 1 | YAĞ POMPA PULU | SPACER WASHER | 1,00mm | | ♦ | ♦ |
| 53 | K21.04301 | 389 262 5554 | | 1 | YAĞ POMPA PULU | SPACER WASHER | 1,10mm | | ♦ | ♦ |
| 53 | K21.04305 | 389 262 5354 | | 1 | YAĞ POMPA PULU | SPACER WASHER | 1,20mm | | ♦ | ♦ |
| 54 | K21.03412 | 945 269 0201 | (389 269 2501) | 1 | YAĞ POMPA KAPAĞI | OIL PUMP COVER | | | ♦ | ♦ |
| 55 | K21.03511 | 029 997 5748 | | 1 | YAĞ POMPA ORİNGİ | O-RING | 112X2,5mm | | ♦ | ♦ |
| 56 | K21.03413 | 389 269 1406 | (389 269 1506) | 1 | YAĞ POMPA İÇ ROTOR | OIL PUMP GEAR | | | ♦ | ♦ |
| | | | (945 260 0090) | | | | | | | |
| 57 | K21.03414 | 389 269 0706 | (389 269 1206) | 1 | YAĞ POMPA DIŞ ROTOR | ROTOR | | | ♦ | ♦ |
| 58 | K21.03415 | 389 269 3801 | | 1 | YAĞ POMPA GÖVDESİ | OIL PUMP HOUSING | | | ♦ | ♦ |
| 59 | K21.03411 | 389 260 0690 | (389 260 0590) | 1 | YAĞ POMPASI | OIL PUMP | | | ♦ | ♦ |
| 60 | K21.06587 | 389 261 1980 | (389 261 1480) | 1 | PTO KAPAK CONTASI | GASKET | | | ♦ | ♦ |
| 60 | | 389 261 1280 | (389 261 0380) | 1 | PTO KAPAK CONTASI | GASKET | | | ♦ | ♦ |
| 60 | K21.03667 | 945 261 0680 | (945 261 0580) | 1 | PTO KAPAK CONTASI | GASKET | | | ♦ | ♦ |

NOTES :
Parts encoded alphabetic and numaric are used together.

NOTLAR :
Alfabetik ve rakam ile kodlanan parçalar birlikte kullanılır.





Original parts names, oem numbers, symbols and descriptions used in this catalogue are for reference purposes only.

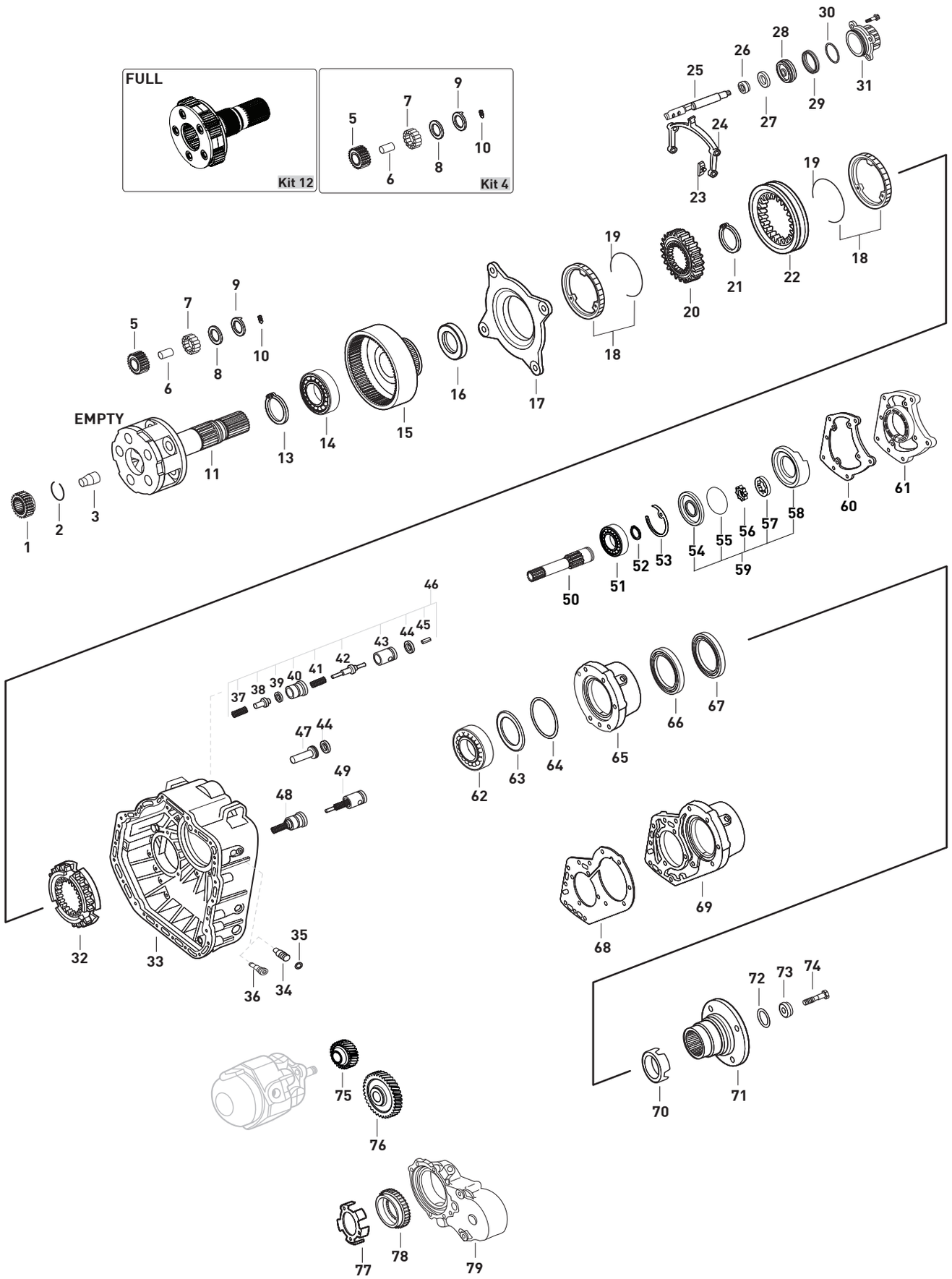






Original parts names, oem numbers, symbols and descriptions used in this catalogue are for reference purposes only.

| Fig. | Kacmaz No | Oem No | Oem Old No | Pcs. | Ürün Tanımı | Description | Sizes | Not | G155-9/15,9 | GO210-8/11,8 EPS |
|---|---|---|---|---|---|---|---|---|---|---|
| 61 | K21.06260 | 389 261 2433 | (389 261 2333) | 1 | PTO KAPAĞI | COVER | | | ♦ | ♦ |
| | | | (389 261 0933) | | | | | | | |
| 61 | | 389 261 0433 | | 1 | PTO KAPAĞI | COVER | | | ♦ | ♦ |
| 62 | K21.03617 | 004 981 9325 | (004 981 8925) | 1 | ŞANZIMAN ARKA BİLYA | ROLLER BEARING | 85X150X28mm | | ♦ | ♦ |
| | | | (004 981 8525) | | | | | | | |
| 63 | K21.04077 | 389 262 3954 | | 1 | ŞANZIMAN HEYKEL AYAR PULU | THRUST WASHER | 3,50mm | | ♦ | ♦ |
| 64 | K21.04081 | 389 262 7754 | | 1 | ŞANZIMAN HEYKELİ AYAR PULU | THRUST WASHER | 1,40mm | | ♦ | ♦ |
| 64 | K21.04139 | 389 262 5152 | | 1 | ŞANZIMAN HEYKELİ AYAR PULU | THRUST WASHER | 0,80mm | | ♦ | ♦ |
| 64 | K21.04080 | 389 262 5052 | | 1 | ŞANZIMAN HEYKELİ AYAR PULU | THRUST WASHER | 0,40mm | | ♦ | ♦ |
| 64 | K21.04079 | 389 262 7654 | | 1 | ŞANZIMAN HEYKELİ AYAR PULU | THRUST WASHER | 0,25mm | | ♦ | ♦ |
| 64 | K21.04140 | 389 262 4952 | | 1 | ŞANZIMAN HEYKELİ AYAR PULU | THRUST WASHER | 0,20mm | | ♦ | ♦ |
| 64 | K21.04141 | 389 262 4852 | | 1 | ŞANZIMAN HEYKELİ AYAR PULU | THRUST WASHER | 0,15mm | | ♦ | ♦ |
| 64 | K21.04078 | 389 262 4752 | | 1 | ŞANZIMAN HEYKELİ AYAR PULU | THRUST WASHER | 0,10mm | | ♦ | ♦ |
| 65 | K21.06237 | 389 261 0420 | (389 261 0520) | 1 | ŞANZIMAN ARKA KAPAK | COVER | | | ♦ | ♦ |
| 66 | K21.03507 | 013 997 7347 | (015 997 4247) | 1 | ŞANZIMAN ARKA KEÇE | OIL SEAL | 95X115X13/12mm | | ♦ | ♦ |
| | | | (013 997 5647) | | | | | | | |
| 67 | K21.03528 | 013 997 7247 | (014 997 1947) | 1 | ŞANZIMAN ARKA KEÇE | OIL SEAL | 95X115X13mm | | ♦ | ♦ |
| | | | (013 997 5547) | | | | | | | |
| 68 | | 389 261 1180 | (389 261 0280) | 1 | ŞANZIMAN ARKA KAPAK CONTASI | GASKET | | (3) | ♦ | ♦ |
| 69 | | 389 261 0320 | (389 261 0220) | 1 | ŞANZIMAN ARKA KAPAK | COVER | | (3) | ♦ | ♦ |
| 70 | | 945 262 0528 | (389 260 0150) | 1 | ŞANZIMAN KM DEVİR SACI | PULSE STAR | | | ♦ | ♦ |
| 71 | K21.03084 | 389 262 0445 | | 1 | ŞANZIMAN FLANŞI | COMPANION FLANGE | 4-H, Ø180mm | | ♦ | ♦ |
| 72 | K21.04310 | 014 997 5148 | (020 997 8648) | 1 | ŞANZIMAN FLANŞ ORİNGİ | O-RING | 72,4X5,3mm | | ♦ | ♦ |
| 73 | K21.06977 | 389 262 0362 | (945 262 0062) | 1 | ŞANZIMAN FLANŞI ALIN PULU | THRUST WASHER | 95X24mm | | ♦ | ♦ |
| 74 | K21.06028 | 945 990 0019 | (389 990 2019) | 1 | ŞANZIMAN FLANŞI ALIN VİDASI | SCREW | M24X2X85 | | ♦ | ♦ |
| | | | (389 990 0219) | | | | | | | |
| 75 | K21.03672 | 387 264 2821 | | 1 | DİREKSİYON POMPA DİŞLİSİ | GEAR | | (4) | ♦ | ♦ |
| 76 | | 387 264 3021 | | 1 | DİREKSİYON POMPA DİŞLİ KARŞILIĞI | GEAR | | (4) | ♦ | ♦ |
| 76 | | 387 264 4721 | | 1 | DİREKSİYON POMPA DİŞLİ KARŞILIĞI | GEAR | | (4) | ♦ | ♦ |
| 77 | K21.04083 | 387 262 0828 | (387 262 0428) | 1 | ŞANZIMAN KM DEVİR SACI | PULSE STAR | | (4) | ♦ | ♦ |
| 78 | | 389 264 0021 | (945 264 0121) | 1 | ŞANZIMAN KM DİŞLİSİ 64 DİŞ | GEAR 64 T | | (4) | ♦ | ♦ |
| 79 | K21.06279 | 389 261 1120 | | 1 | ŞANZIMAN ARKA KAPAK | COVER | | (4) | ♦ | ♦ |

NOTES :
Parts encoded alphabetic and numaric are used together.

NOTLAR :
Alfabetik ve rakam ile kodlanan parçalar birlikte kullanılır.





Original parts names, oem numbers, symbols and descriptions used in this catalogue are for reference purposes only.

SYNCHRONIZER KIT Const./3rd

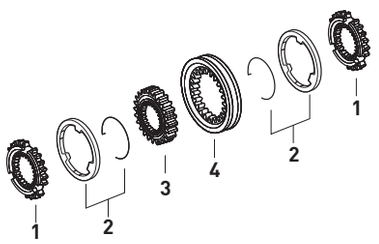


| Fig. | Kacmaz No. | Oem No | Oem Old No | Pcs. | Ürün Tanımı | Description |
|---|---|---|---|---|---|---|
| | K21.06205 | | | Kit | PRİZ./3.VİTES SENK.KİT | SYNCH.KIT Const./3rd |
| 1 | K21.03012 | 389 262 5634 | (389 262 3934) | 2 | PRİZ./3.VİT.SENKROMENÇ | ENGAGING RING |
| 2 | K21.03015 | 389 262 0637 | (387 262 0837) | 2 | PRİZ./3.VİT.FRENLEME (Mo) | SYNCHRONIZING CONE / Mo |
| 3 | K21.03399 | 389 262 0635 | | 1 | PRİZ./3.VİTES YILDIZ DİŞLİ | SYNCHRONIZER HUB |
| 4 | K21.03011 | 389 262 3023 | (389 262 2223) | 1 | PRİZ./3.VİTES HALKA | ENGAGING SLEEVE |
| | | | (389 262 0623) | | | |

SYNCHRONIZER KIT 1st/2nd

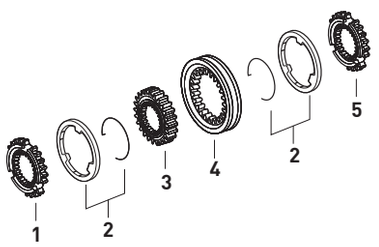


| Fig. | Kacmaz No. | Oem No | Oem Old No | Pcs. | Ürün Tanımı | Description |
|---|---|---|---|---|---|---|
| | K21.06206 | | | Kit | 1./2.VİTES SENK.KİT | SYNCH.KIT 1st/2nd |
| 1 | K21.03019 | 389 262 0534 | | 1 | 2.VİTES SENKROMENÇ | ENGAGING RING |
| 2 | K21.03016 | 389 262 0737 | (387 262 0937) | 2 | 1./2.VİTES FRENLEME (Mo) | SYNCHRONIZING CONE / Mo |
| 3 | K21.03056 | 389 262 0035 | | 1 | 1./2.VİTES YILDIZ DİŞLİ | SYNCHRONIZER HUB |
| 4 | K21.03010 | 389 262 2923 | (389 262 0723) | 1 | 1./2.VİTES HALKA | ENGAGING SLEEVE |
| 5 | K21.03025 | 945 262 0434 | (389 262 0034) | 1 | 1.VİTES SENKROMENÇ | ENGAGING RING |

SYNCHRONIZER KIT PLANETARY
NEW MODEL

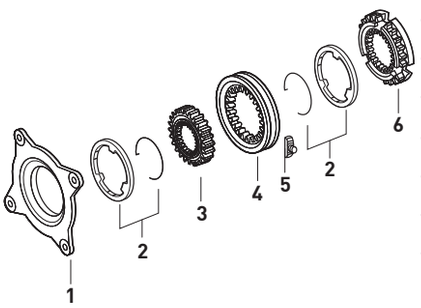


| Fig. | Kacmaz No. | Oem No | Oem Old No | Pcs. | Ürün Tanımı | Description |
|---|---|---|---|---|---|---|
| | K21.06195 | | | Kit | AĞIR SERİ SENK.KİT | SYNCH.KIT PLANETARY |
| 1 | K21.03018 | 389 260 2036 | | 1 | TABLA SENKROMENÇ | FOLLOWER RING |
| 2 | K21.03017 | 389 262 0537 | (389 262 0037) | 2 | AĞIR SERİ FRENLEME (Mo) | SYNCHRONIZING CONE / Mo |
| 3 | K21.03079 | 389 262 4935 | (389 262 2035) | 1 | A.SERİ YILDIZ DİŞLİ 73 DİŞ | SYNCHRONIZER HUB 73 T. |
| 4 | K21.03028 | 945 262 6623 | (945 262 0823) | 1 | AĞIR SERİ HALKA 73 DİŞ | ENGAGING SLEEVE 73 T. |
| | | | (389 262 1623) | | | |
| 5 | K21.03406 | 389 265 2449 | (389 265 1249) | 2 | A.SERİ HİLAL PABUCU | SLIDING PAD |
| 6 | K21.03020 | 389 262 4034 | | 1 | SERİ SENKROMENÇ | ENGAGING RING |

SYNCHRONIZER KIT PLANETARY
NEW MODEL

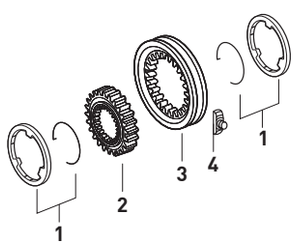


| Fig. | Kacmaz No. | Oem No | Oem Old No | Pcs. | Ürün Tanımı | Description |
|---|---|---|---|---|---|---|
| | K21.06194 | | | Kit | AĞIR SERİ SENK.KİT | SYNCH.KIT PLANETARY |
| 1 | K21.03017 | 389 262 0537 | (389 262 0037) | 2 | AĞIR SERİ FRENLEME (Mo) | SYNCHRONIZING CONE / Mo |
| 2 | K21.03079 | 389 262 4935 | (389 262 2035) | 1 | A.SERİ YILDIZ DİŞLİ 73 DİŞ | SYNCHRONIZER HUB 73 T. |
| 3 | K21.03028 | 945 262 6623 | (945 262 2623) | 1 | AĞIR SERİ HALKA 73 DİŞ | ENGAGING SLEEVE 73 T. |
| | | | (945 262 0823) | | | |
| 4 | K21.03406 | 389 265 2449 | (945 265 0349) | 2 | A.SERİ HİLAL PABUCU | SLIDING PAD |

SYNCHRONIZER KIT PLANETARY

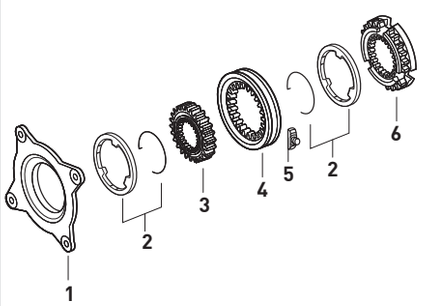


| Fig. | Kacmaz No. | Oem No | Oem Old No | Pcs. | Ürün Tanımı | Description |
|---|---|---|---|---|---|---|
| | K21.06197 | | | Kit | AĞIR SERİ SENK.KİT | SYNCH.KIT PLANETARY |
| 1 | K21.03076 | 389 260 0936 | | 1 | TABLA SENKROMENÇ | FOLLOWER RING |
| 2 | K21.03017 | 389 262 0537 | (389 262 0037) | 2 | AĞIR SERİ FRENLEME (Mo) | SYNCHRONIZING CONE / Mo |
| 3 | K21.03081 | 389 262 0535 | | 1 | A.SERİ YILDIZ DİŞLİ 72 DİŞ | SYNCHRONIZER HUB 72 T. |
| 4 | K21.03420 | 389 262 1523 | (389 262 0123) | 1 | AĞIR SERİ HALKA 72 DİŞ | ENGAGING SLEEVE 72 T. |
| 5 | K21.03406 | 389 265 2449 | (389 265 1249) | 2 | A.SERİ HİLAL PABUCU | SLIDING PAD |
| 6 | K21.03082 | 389 262 2334 | (389 262 1934) | 1 | SERİ SENKROMENÇ | ENGAGING RING |

SYNCHRONIZER KIT PLANETARY

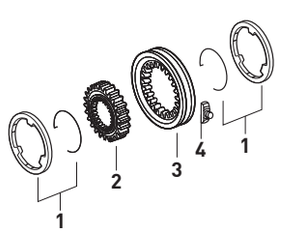


| Fig. | Kacmaz No. | Oem No | Oem Old No | Pcs. | Ürün Tanımı | Description |
|---|---|---|---|---|---|---|
| | K21.06196 | | | Kit | AĞIR SERİ SENK.KİT | SYNCH.KIT PLANETARY |
| 1 | K21.03017 | 389 262 0537 | (389 262 0037) | 2 | AĞIR SERİ FRENLEME (Mo) | SYNCHRONIZING CONE / Mo |
| 2 | K21.03081 | 389 262 0535 | | 1 | A.SERİ YILDIZ DİŞLİ 72 DİŞ | SYNCHRONIZER HUB 72 T. |
| 3 | K21.03420 | 389 262 1523 | (389 262 0123) | 1 | AĞIR SERİ HALKA 72 DİŞ | ENGAGING SLEEVE 72 T. |
| 4 | K21.03406 | 389 265 2449 | (389 265 1249) | 2 | A.SERİ HİLAL PABUCU | SLIDING PAD |



**Original parts names, oem numbers, symbols and descriptions used in this catalogue are for reference purposes only.**

# NOTES / NOTLAR



Original parts names, oem numbers, symbols and descriptions used in this catalogue are for reference purposes only.

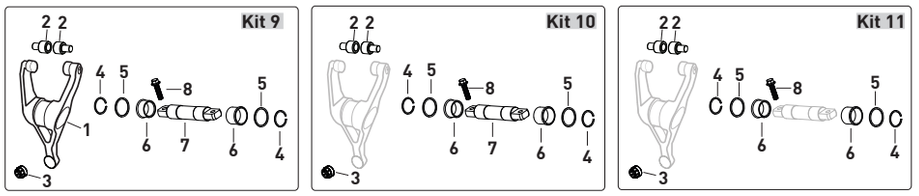


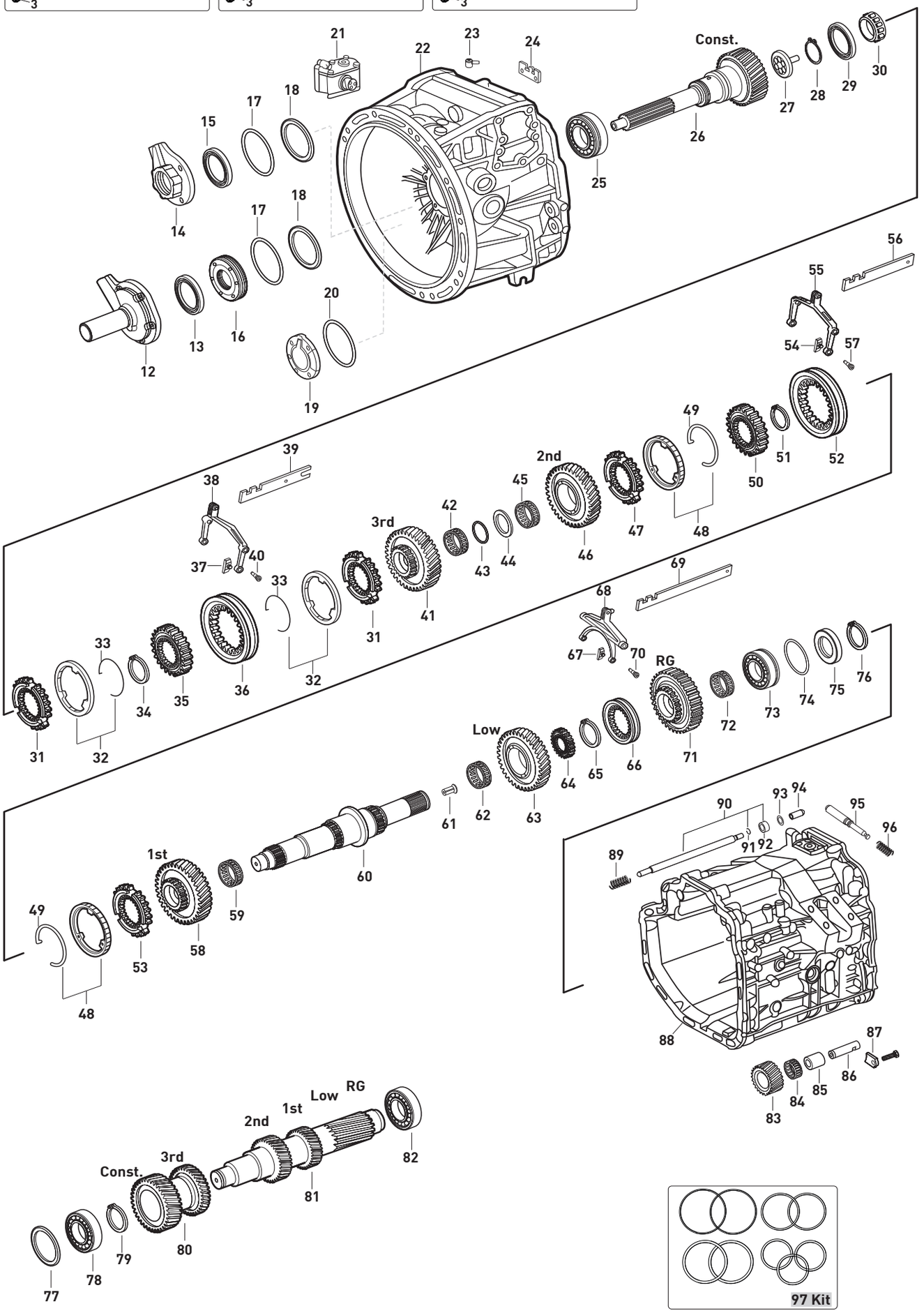







Original parts names, oem numbers, symbols and descriptions used in this catalogue are for reference purposes only.

| Fig. | Kacmaz No | Oem No | Oem Old No | Pcs. | Ürün Tanımı | Description | Sizes | Not | G 221-9/10.19-1.0 | G 181-9/10.19-1.0 | | |
|---|---|---|---|---|---|---|---|---|---|---|---|---|
| 1 | | 655 250 1513 | | 1 | DEBRİYAJ ÇATALI | RELEASE FORK | | | ♦ | ♦ | | |
| 2 | K21.07038 | 000 254 0017 | | 2 | DEBRİYAJ ÇATAL BURÇ VE PİMİ | CAM ROLLER | | | ♦ | ♦ | | |
| 3 | K21.07040 | 000 254 0335 | | 1 | DEBRİYAJ ÇATAL PLASTİK BURCU | PLASTIC BUSHING | | | ♦ | ♦ | | |
| 4 | | 912009 035100 | | 2 | DEBRİYAJ ÇATAL MİL SEKMANI | RETAINING RING | | | ♦ | ♦ | | |
| 5 | | 000988 036100 | | 2 | DEBRİYAJ ÇATAL MİL AYAR PULU | WASHER | | | ♦ | ♦ | | |
| 6 | | 002 992 1501 | | 2 | DEBRİYAJ ÇATAL MİL BURCU | BUSHING | 36,5X43X16mm | | ♦ | ♦ | | |
| 7 | | 655 254 0206 | | 1 | DEBRİYAJ ÇATAL MİLİ | SHAFT | | | ♦ | ♦ | | |
| 8 | | 910105 012026 | | 2 | DEBRİYAJ ÇATAL MİL VİDASI | SCREW | M12X40mm | | ♦ | ♦ | | |
| 9 | K21.07036 | 655 250 1813 | | Kit | DEBRİYAJ ÇATALI KOMPLE | RELEASE FORK COMPLETE | | | ♦ | ♦ | | |
| 9 | K21.97036 | 655 250 1813-S | | Kit | DEB.ÇATALI KOMPLE (BİLYALI TİP) | RELEASE FORK COMPLETE | | WITH BEARING | ♦ | ♦ | | |
| 10 | K21.07037 | | | Kit | DEBRİYAJ ÇATALI TAMİR TAKIMI | RELEASE FORK REPAIR KIT | | | ♦ | ♦ | | |
| 11 | K21.07039 | | | Kit | DEBRİYAJ ÇATALI TAMİR TK.MİLSİZ | RELEASE FORK REPAIR KIT | | W/OUT SHAFT | ♦ | ♦ | | |
| 12 | K21.03429 | 945 261 1118 | (945 261 0118) | 1 | PRİZDİREK KEÇE KAPAĞI | COVER | | | ♦ | ♦ | | |
| | | | (945 261 0818) | | | | | | | | | |
| 13 | K21.03509 | 019 997 0547 | (023 997 7847) | 1 | PRİZDİREK KEÇESİ | OIL SEAL | 56X72X8mm | | ♦ | ♦ | | |
| | | | (019 997 0647) | | | | | | | | | |
| | | | (022 997 8547) | | | | | | | | | |
| 14 | | 945 261 3318 | (945 261 2518) | 1 | PRİZDİREK KEÇE KAPAĞI | COVER | | | ♦ | | | |
| 15 | K21.03521 | 015 997 1647 | (015 997 0647) | 1 | PRİZDİREK ÖN KEÇE | OIL SEAL | 52X68X8mm | | ♦ | | | |
| | | | (024 997 2147) | | | | | | | | | |
| 16 | K21.06038 | 389 261 0665 | (389 261 0765) | 1 | YAĞ TUTUCU DİSK | OIL BAFFLE | 75X16mm | | ♦ | ♦ | | |
| | | | (389 261 0865) | | | | | | | | | |
| 17 | K21.06635 | 020 997 7848 | | 1 | PRİZDİREK KEÇE KAPAK ORİNGİ | O-RING | 138X3mm | | ♦ | ♦ | | |
| 18 | K21.04162 | 389 262 4152 | (389 262 0955) | 1 | PRİZDİREK AYAR RAYNELİ | THRUST WASHER | 0,10mm | | ♦ | ♦ | | |
| 18 | K21.04243 | 389 262 0855 | | 1 | PRİZDİREK AYAR RAYNELİ | THRUST WASHER | 0,15mm | | ♦ | ♦ | | |
| 18 | K21.04151 | 389 262 0755 | | 1 | PRİZDİREK AYAR RAYNELİ | THRUST WASHER | 0,20mm | | ♦ | ♦ | | |
| 18 | K21.06715 | 389 262 3055 | | 1 | PRİZDİREK AYAR RAYNELİ | THRUST WASHER | 0,25mm | | ♦ | ♦ | | |
| 18 | K21.04221 | 389 262 3255 | | 1 | PRİZDİREK AYAR RAYNELİ | THRUST WASHER | 0,31mm | | ♦ | ♦ | | |
| 18 | K21.04163 | 389 262 3555 | (389 262 0655) | 1 | PRİZDİREK AYAR RAYNELİ | THRUST WASHER | 0,40mm | | ♦ | ♦ | | |
| | | | (389 262 4452) | | | | | | | | | |
| 18 | K21.04164 | 389 262 3755 | (389 262 1954) | 1 | PRİZDİREK AYAR RAYNELİ | THRUST WASHER | 0,46mm | | ♦ | ♦ | | |
| 18 | K21.04246 | 389 262 3855 | | 1 | PRİZDİREK AYAR RAYNELİ | THRUST WASHER | 0,49mm | | ♦ | ♦ | | |
| 18 | K21.04250 | 389 262 4055 | (389 262 0155) | 1 | PRİZDİREK AYAR RAYNELİ | THRUST WASHER | 0,55mm | | ♦ | ♦ | | |
| | | | (389 262 2154) | | | | | | | | | |
| 18 | K21.04167 | 389 262 4255 | (389 262 2254) | 1 | PRİZDİREK AYAR RAYNELİ | THRUST WASHER | 0,61mm | | ♦ | ♦ | | |
| 18 | K21.04168 | 389 262 4355 | (389 262 2354) | 1 | PRİZDİREK AYAR RAYNELİ | THRUST WASHER | 0,64mm | | ♦ | ♦ | | |
| 18 | K21.04169 | 389 262 4555 | (389 262 2454) | 1 | PRİZDİREK AYAR RAYNELİ | THRUST WASHER | 0,70mm | | ♦ | ♦ | | |
| 18 | K21.04170 | 389 262 4755 | (389 262 2554) | 1 | PRİZDİREK AYAR RAYNELİ | THRUST WASHER | 0,76mm | | ♦ | ♦ | | |
| 18 | K21.04281 | 389 262 4855 | (389 262 0555) | 1 | PRİZDİREK AYAR RAYNELİ | THRUST WASHER | 0,79mm | | ♦ | ♦ | | |
| 18 | K21.04282 | 389 262 5555 | | 1 | PRİZDİREK AYAR RAYNELİ | THRUST WASHER | 1,00mm | | ♦ | ♦ | | |
| 18 | K21.04171 | 389 262 9654 | (389 262 2654) | 1 | PRİZDİREK AYAR RAYNELİ | THRUST WASHER | 2,00mm | | ♦ | ♦ | | |
| 19 | | 976 261 1833 | (976 261 1733) | 1 | GRUP MİLİ ÖN BİLYA KAPAĞI | COVER | | | ♦ | ♦ | | |
| | | | (976 261 1633) | | | | | | | | | |
| 20 | K21.06533 | 028 997 2348 | (004 997 2248) | 1 | GRUP MİLİ BİLYA KAPAK ORİNGİ | O-RING | 100X3mm | | ♦ | ♦ | | |
| 21 | K21.06345 | 945 260 1457 | (945 260 0057) | 1 | PİSTON VALFİ | VALVE | | | ♦ | | | |
| 22 | | 945 260 8811 | (945 260 2612) | 1 | ŞANZIMAN ÖN GÖVDE | HOUSING | | | ♦ | ♦ | | |
| | | | (945 260 9411) | | | | | | | | | |
| | | | (945 260 9311) | | | | | | | | | |
| | | | (945 260 9211) | | | | | | | | | |
| 22 | | 945 260 2812 | | 1 | ŞANZIMAN ÖN GÖVDE | HOUSING | | | ♦ | | | |
| 23 | K21.06529 | 437 261 0082 | (945 261 0082) | 1 | ŞANZIMAN HAVALANDIRMA | CAP | | | ♦ | ♦ | | |
| 24 | K21.06509 | 945 267 0459 | | 1 | VİTES HİLAL ÇITA KİLİTLEMESİ | BRACKET | | | ♦ | ♦ | | |
| 25 | K21.03618 | 011 981 1305 | (014 981 9005) | 1 | PRİZDİREK ÖN BİLYA | ROLLER BEARING | 75X140X34,25mm | | ♦ | ♦ | | |

NOTES :
Parts encoded alphabetic and numaric are used together.

NOTLAR :
Alfabetik ve rakam ile kodlanan parçalar birlikte kullanılır.





Original parts names, oem numbers, symbols and descriptions used in this catalogue are for reference purposes only.

# GEARBOX G 221-9/10,19-1,0 & G 181-9/10,19-1,0

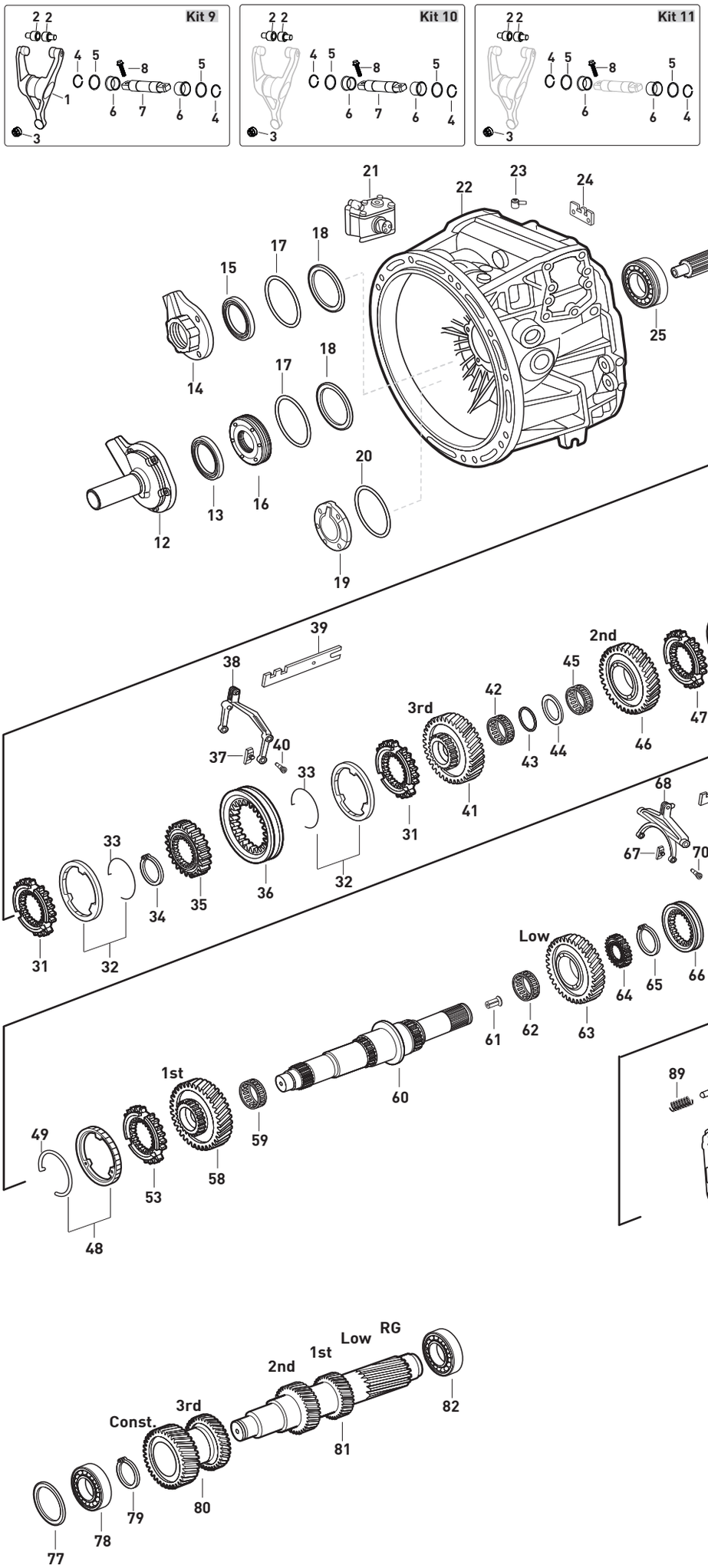




Original parts names, oem numbers, symbols and descriptions used in this catalogue are for reference purposes only.

| Fig. | Kacmaz No | Oem No | Oem Old No | Pcs. | Ürün Tanımı | Description | Sizes | Not | G 221-9/10.19-1.0 | G 181-9/10.19-1.0 | | |
|---|---|---|---|---|---|---|---|---|---|---|---|---|
| 26 | K21.03361 | 945 262 2602 | (945 262 7502) | 1 | PRİZDİREK 27 DİŞ | INPUT SHAFT 27 T. | | (A) | ♦ | | | |
| | | | (945 262 2702) | | | | | | | | | |
| | | | (945 262 2902) | | | | | | | | | |
| | | | (945 262 3002) | | | | | | | | | |
| | | | (945 262 3102) | | | | | | | | | |
| | | | (945 262 3202) | | | | | | | | | |
| 26 | K21.03364 | 945 262 1602 | (945 262 6702) | 1 | PRİZDİREK 27 DİŞ | INPUT SHAFT 27 T. | | (B) | ♦ | | | |
| | | | (945 262 1502) | | | | | | | | | |
| | | | (945 262 1702) | | | | | | | | | |
| | | | (945 262 1802) | | | | | | | | | |
| 26 | K21.03481 | 945 262 4082 | | 1 | PRİZDİREK 27 DİŞ | INPUT SHAFT 27 T. | | (C) | ♦ | | | |
| 26 | K21.06235 | 945 262 4182 | (945 262 4282) | 1 | PRİZDİREK 27 DİŞ | INPUT SHAFT 27 T. | | (D) | ♦ | | | |
| 26 | | 945 262 4202 | | 1 | PRİZDİREK | INPUT SHAFT | | | ♦ | | | |
| 26 | | 945 262 4382 | | 1 | PRİZDİREK | INPUT SHAFT | | (E) | | ♦ | | |
| 27 | K21.04001 | 976 269 0034 | (960 269 0434) | 1 | PRİZDİREK YAĞ PİPETİ | OIL COLLECTOR | | | ♦ | ♦ | | |
| 28 | K21.04002 | 000 994 9841 | | 1 | PRİZDİREK YAĞ PİPET SEKMANI | RETAINING RING | | | ♦ | ♦ | | |
| 29 | K21.03539 | 017 997 9947 | (018 997 7347) | 1 | PRİZDİREK ARKA KEÇE | OIL SEAL | 75X94X11,50mm | (C)(D)(E) | ♦ | ♦ | | |
| | | | (018 997 4947) | | | | | | | | | |
| 30 | K21.03634 | 015 981 1705 | (014 981 8805) | 1 | KAMALI MİL UÇ BİLYA | ROLLER BEARING | 39,7X43,1mm | (A) | ♦ | | | |
| | | | (021 981 2205) | | | | | | | | | |
| | | | (021 981 6105) | | | | | | | | | |
| 30 | K21.03619 | 015 981 1605 | (013 981 1105) | 1 | KAMALI MİL UÇ BİLYA | ROLLER BEARING | 39,69X40,39mm | (B) | ♦ | | | |
| 30 | K21.03632 | 020 981 5205 | (017 981 1305) | 1 | KAMALI MİL UÇ BİLYA | ROLLER BEARING | 39,69X40,39mm | (C)(D)(E) | ♦ | ♦ | | |
| | | | (015 981 8505) | | | | | | | | | |
| 31 | K21.03147 | 945 262 7734 | (945 262 3634) | 2 | PRİZ.VE 3.VİTES SENKROMENÇ | ENGAGING RING | | (1) | ♦ | ♦ | | |
| 31 | K21.03024 | 389 262 5434 | (945 262 0334) | 2 | PRİZ.VE 3.VİTES SENKROMENÇ | ENGAGING RING | | (2) | ♦ | | | |
| | | | (945 262 0134) | | | | | | | | | |
| 32 | K21.03136 | 945 260 2245 | (946 262 6337) | 2 | PRİZ.VE 3.VİTES FRENLEME (Mo) | SYNCHRONIZING CONE / Mo | | (1) | ♦ | ♦ | | |
| 32 | K21.03015 | 389 262 0637 | (387 262 0837) | 2 | PRİZ.VE 3.VİTES FRENLEME (Mo) | SYNCHRONIZING CONE / Mo | | (2) | ♦ | | | |
| | | | (389 262 1037) | | | | | | | | | |
| 33 | K21.03044 | 387 262 1093 | (387 262 0693) | 2 | FRENLEME TELİ | SPRING | | | ♦ | ♦ | | |
| | | | (960 262 1393) | | | | | | | | | |
| 34 | | 945 262 0973 | | 1 | PRİZ.VE 3.VİT.YILDIZ DİŞLİ SEKMANI | RETAINING RING | 2,80mm | | ♦ | ♦ | | |
| 34 | | 387 262 4873 | | 1 | PRİZ.VE 3.VİT.YILDIZ DİŞLİ SEKMANI | RETAINING RING | 2,90mm | | ♦ | ♦ | | |
| 34 | | 945 262 1373 | | 1 | PRİZ.VE 3.VİT.YILDIZ DİŞLİ SEKMANI | RETAINING RING | 3,00mm | | ♦ | ♦ | | |
| 34 | | 387 262 5273 | | 1 | PRİZ.VE 3.VİT.YILDIZ DİŞLİ SEKMANI | RETAINING RING | 3,10mm | | ♦ | ♦ | | |
| 35 | K21.03366 | 945 262 1835 | (945 262 1935) | 1 | PRİZ.VE 3.VİTES YILDIZ DİŞLİ | SYNCHRONIZER HUB | | (B) | ♦ | | | |
| 35 | K21.06077 | 945 262 3735 | | 1 | PRİZ.VE 3.VİTES YILDIZ DİŞLİ | SYNCHRONIZER HUB | | (A)(C) (D)(E) | ♦ | ♦ | | |
| 36 | K21.03137 | 945 262 6823 | (945 262 6423) | 1 | PRİZDİREK VE 3.VİTES HALKA | ENGAGING SLEEVE | | (1) | ♦ | ♦ | | |
| 36 | K21.03002 | 945 262 2823 | (945 262 0323) | 1 | PRİZDİREK VE 3.VİTES HALKA | ENGAGING SLEEVE | | (2) | ♦ | | | |
| | | | (945 262 0623) | | | | | | | | | |
| | | | (389 262 4123) | | | | | | | | | |
| | | | (389 262 2723) | | | | | | | | | |
| 37 | K21.03431 | 960 265 0049 | (947 265 0349) | 2 | 1./3.VİTES HİLAL PABUCU | SLIDING PAD | | | ♦ | ♦ | | |
| | | | (389 265 2749) | | | | | | | | | |
| 38 | | 945 260 2230 | | 1 | PRİZ.VE 3.VİTES HİLALİ | GEAR SHIT FORK | | | ♦ | ♦ | | |
| 39 | | 945 265 2204 | | 1 | PRİZ.VE 3.VİT.HİLAL ÇITASI | SHIFTING ROD | | | ♦ | ♦ | | |
| 40 | K21.04307 | 960 265 0774 | (945 265 1274) | 2 | HİLAL CİVATASI | PIN | | | ♦ | ♦ | | |
| | | | (945 265 2974) | | | | | | | | | |
| | | | (945 265 2774) | | | | | | | | | |
| 41 | K21.03367 | 945 262 1617 | (945 262 1717) | 1 | 3.VİTES DİŞLİSİ 32 DİŞ | GEAR 3rd 32 T. | | | ♦ | ♦ | | |
| | | | (945 262 1913) | | | | | | | | | |
| | | | (945 262 1413) | | | | | | | | | |

NOTES :
Parts encoded alphabetic and numaric are used together.

NOTLAR :
Alfabetik ve rakam ile kodlanan parçalar birlikte kullanılır.





Original parts names, oem numbers, symbols and descriptions used in this catalogue are for reference purposes only.

# GEARBOX G 221-9/10,19-1,0 & G 181-9/10,19-1,0

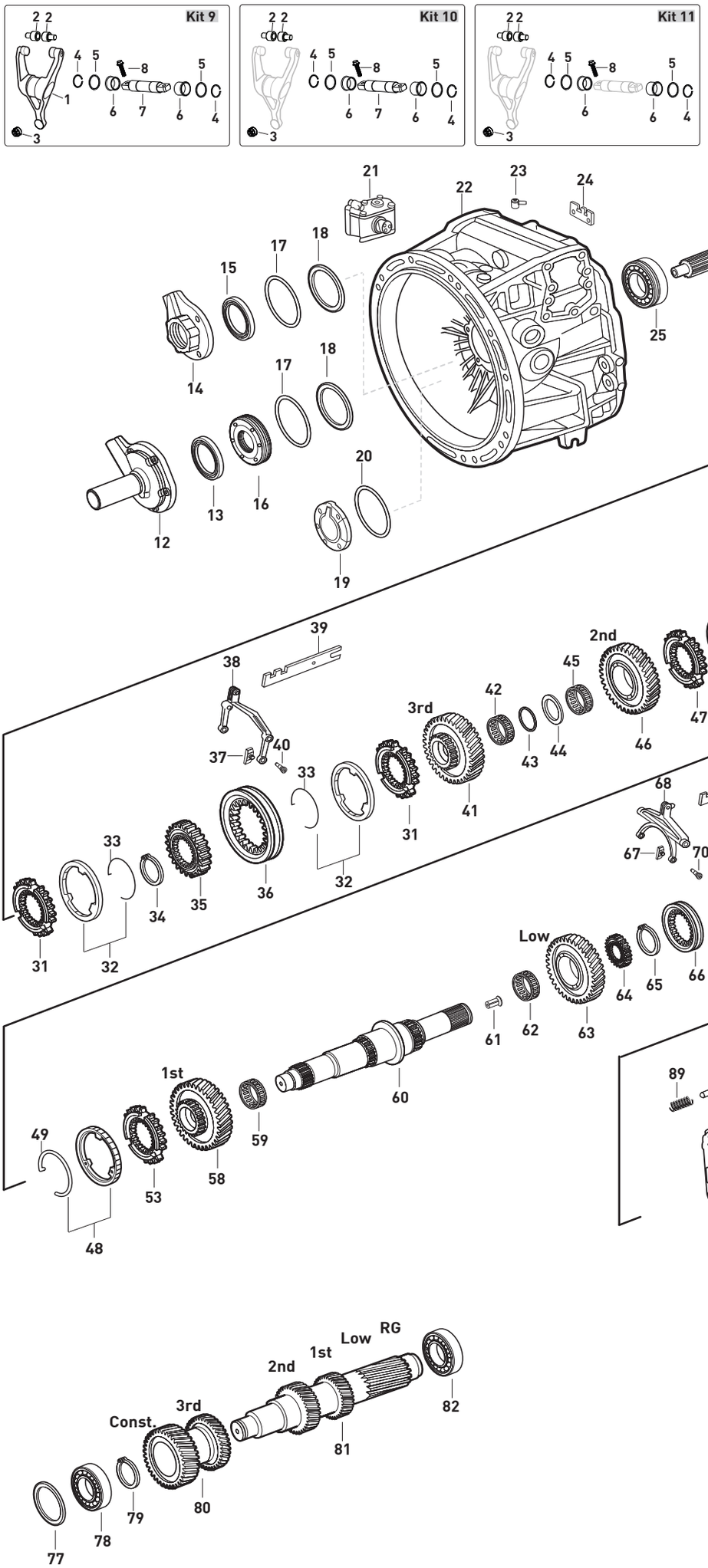




Original parts names, oem numbers, symbols and descriptions used in this catalogue are for reference purposes only.

| Fig. | Kacmaz No | Oem No | Oem Old No | Pcs. | Ürün Tanımı | Description | Sizes | Not | G 221-9/10.19-1.0 | G 181-9/10.19-1.0 | | |
|---|---|---|---|---|---|---|---|---|---|---|---|---|
| 42 | K21.03822 | 009 981 4510 | (019 981 1910) | 1 | 3.VİT.MASURA BİLYA | NEEDLE CAGE | 68X76X55mm | | ♦ | ♦ | | |
| | | | (019 981 9110) | | | | | | | | | |
| 43 | | 945 262 0273 | | 1 | 3.VİTES MASURA BİLYA SEKMANI | | 2,85mm | | ♦ | ♦ | | |
| 43 | | 945 262 0473 | | 1 | 3.VİTES MASURA BİLYA SEKMANI | | 2,95mm | | ♦ | ♦ | | |
| 43 | | 945 262 0673 | | 1 | 3.VİTES MASURA BİLYA SEKMANI | | 3,05mm | | ♦ | ♦ | | |
| 44 | K21.04132 | 945 262 0362 | (945 262 0462) | 1 | 2./ 3.VİTES MASURA BİLYA PULU | THRUST WASHER | | | ♦ | ♦ | | |
| 45 | K21.03823 | 019 981 9210 | (023 981 1210) | 1 | 2.VİTES MASURA BİLYA | NEEDLE CAGE | 78X86X48mm | | ♦ | ♦ | | |
| | | | (023 981 5110) | | | | | | | | | |
| 46 | K21.03369 | 945 262 5912 | (945 262 6112) | 1 | 2.VİTES DİŞLİSİ 36 DİŞ | GEAR 2nd 36 T. | | | ♦ | ♦ | | |
| | | | (945 262 0912) | | | | | | | | | |
| | | | (945 262 6012) | | | | | | | | | |
| | | | (945 262 0512) | | | | | | | | | |
| | | | (945 262 0412) | | | | | | | | | |
| 47 | K21.03146 | 945 262 8234 | (945 262 5434) | 1 | 2.VİTES SENKROMENÇ | ENGAGING RING | | (1) | ♦ | ♦ | | |
| 47 | K21.03027 | 945 262 0534 | (389 262 5034) | 1 | 2.VİTES SENKROMENÇ | ENGAGING RING | | (2) | ♦ | | | |
| 48 | K21.03148 | 947 260 1945 | (947 260 4645) | 2 | 1./2.VİTES FRENLEME (Mo) | SYNCHRONIZING CONE / Mo | | (1) | ♦ | ♦ | | |
| | | | (946 262 6137) | | | | | | | | | |
| 48 | K21.03016 | 389 262 0737 | (387 262 0937) | 2 | 1./2.VİTES FRENLEME (Mo) | SYNCHRONIZING CONE / Mo | | (2) | ♦ | | | |
| | | | (389 262 1137) | | | | | | | | | |
| 49 | K21.03055 | 387 262 0893 | (387 262 0793) | 2 | FRENLEME TELİ | SPRING | | | ♦ | ♦ | | |
| 50 | K21.03161 | 389 262 2535 | (945 262 0135) | 1 | 1./2.VİTES YILDIZ DİŞLİ | SYNCHRONIZER HUB | | | ♦ | ♦ | | |
| 51 | K21.04343 | 387 262 2073 | | 1 | 1./2.VİTES YILDIZ DİŞLİ SEKMANI | RETAINING RING | 2,40mm | | ♦ | ♦ | | |
| 51 | K21.06687 | 387 262 2173 | | 1 | 1./2.VİTES YILDIZ DİŞLİ SEKMANI | RETAINING RING | 2,45mm | | ♦ | ♦ | | |
| 51 | K21.04342 | 007 994 0041 | (387 262 2273) | 1 | 1./2.VİTES YILDIZ DİŞLİ SEKMANI | RETAINING RING | 2,50mm | | ♦ | ♦ | | |
| 51 | K21.04359 | 387 262 2373 | | 1 | 1./2.VİTES YILDIZ DİŞLİ SEKMANI | RETAINING RING | 2,55mm | | ♦ | ♦ | | |
| 51 | K21.04345 | 387 262 2473 | | 1 | 1./2.VİTES YILDIZ DİŞLİ SEKMANI | RETAINING RING | 2,60mm | | ♦ | ♦ | | |
| 51 | K21.07021 | 387 262 2573 | | 1 | 1./2.VİTES YILDIZ DİŞLİ SEKMANI | RETAINING RING | 2,65mm | | ♦ | ♦ | | |
| 51 | K21.04344 | 387 262 7973 | | 1 | 1./2.VİTES YILDIZ DİŞLİ SEKMANI | RETAINING RING | 2,70mm | | ♦ | ♦ | | |
| 51 | K21.07022 | 387 262 8073 | | 1 | 1./2.VİTES YILDIZ DİŞLİ SEKMANI | RETAINING RING | 2,75mm | | ♦ | ♦ | | |
| 51 | K21.06588 | 387 262 8173 | | 1 | 1./2.VİTES YILDIZ DİŞLİ SEKMANI | RETAINING RING | 2,80mm | | ♦ | ♦ | | |
| 52 | K21.03151 | 945 262 6523 | (930 262 0523) | 1 | 1./2.VİTES HALKA | ENGAGING SLEEVE | | (1) | ♦ | ♦ | | |
| 52 | K21.03009 | 945 262 2723 | (945 262 0423) | 1 | 1./2.VİTES HALKA | ENGAGING SLEEVE | | (2) | ♦ | | | |
| | | | (389 262 2623) | | | | | | | | | |
| 53 | K21.03160 | 945 262 5534 | | 1 | 1.VİTES SENKROMENÇ | ENGAGING RING | | (1) | ♦ | ♦ | | |
| 53 | K21.03025 | 945 262 0434 | (389 262 0034) | 1 | 1.VİTES SENKROMENÇ | ENGAGING RING | | (2) | ♦ | | | |
| 54 | K21.03431 | 960 265 0049 | (947 265 0349) | 2 | 1./ 2.VİTES HİLAL PABUCU | SLIDING PAD | | | ♦ | ♦ | | |
| | | | (389 265 2749) | | | | | | | | | |
| 55 | | 945 260 2330 | | 1 | 1./ 2.VİTES HİLALİ | SHIFTING FORK | | | ♦ | ♦ | | |
| 56 | | 945 265 2504 | | 1 | 1./ 2.VİTES HİLAL ÇITASI | SHIFTING ROD | | | ♦ | ♦ | | |
| 57 | K21.04307 | 960 265 0774 | (945 265 1274) | 2 | HİLAL CİVATASI | PIN | | | ♦ | ♦ | | |
| | | | (945 265 2974) | | | | | | | | | |
| | | | (945 265 2774) | | | | | | | | | |
| 58 | K21.03370 | 945 262 2711 | (945 262 2911) | 1 | 1.VİTES DİŞLİSİ 41 DİŞ | GEAR 1st 41 T. | | | ♦ | ♦ | | |
| | | | (945 262 2811) | | | | | | | | | |
| | | | (945 262 2511) | | | | | | | | | |
| | | | (945 262 2411) | | | | | | | | | |
| | | | (945 262 2311) | | | | | | | | | |
| 59 | K21.03824 | 021 981 1710 | (019 981 9910) | 1 | 1.VİTES MASURA BİLYA | NEEDLE CAGE | 89X97X68mm | | ♦ | ♦ | | |
| 60 | K21.03483 | 930 262 2105 | (930 262 1305) | 1 | KAMALI MİL | MAIN SHAFT | | (K) | ♦ | ♦ | | |
| 60 | K21.03371 | 945 262 1205 | | 1 | KAMALI MİL | MAIN SHAFT | | (L)(M) | ♦ | | | |
| 61 | K21.04364 | 001 990 2759 | | 1 | KAMALI MİL YAĞ BORUSU | OIL PIPE | | (K) | ♦ | ♦ | | |
| 62 | K21.03815 | 016 981 0010 | (018 981 8710) | 1 | C VİTES MASURA BİLYA | NEEDLE CAGE | 89X97X40mm | | ♦ | ♦ | | |
| | | | (019 981 5110) | | | | | | | | | |

NOTES :
Parts encoded alphabetic and numaric are used together.

NOTLAR :
Alfabetik ve rakam ile kodlanan parçalar birlikte kullanılır.

# GEARBOX G 221-9/10,19-1,0 & G 181-9/10,19-1,0

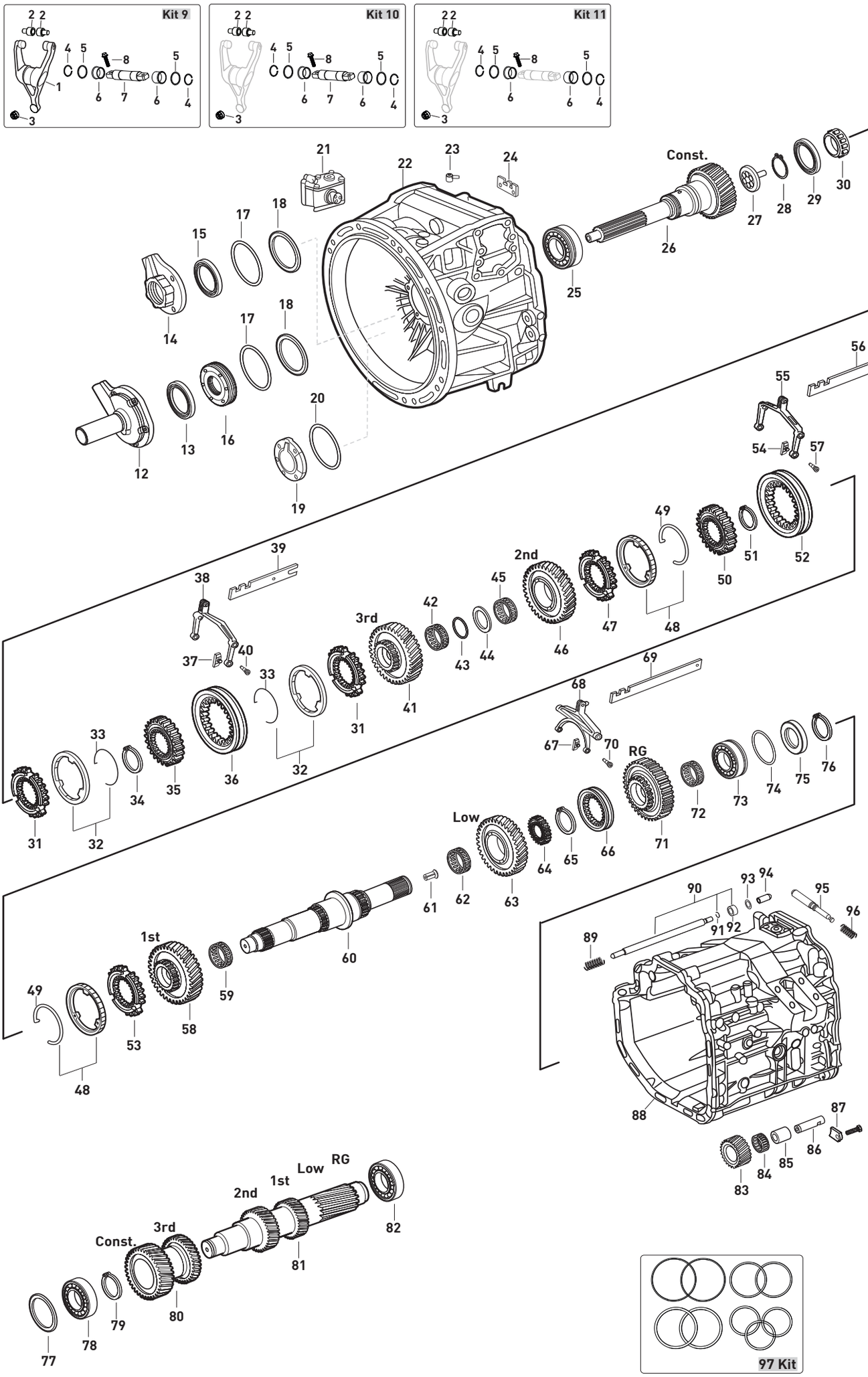




Original parts names, oem numbers, symbols and descriptions used in this catalogue are for reference purposes only.

| Fig. | Kacmaz No | Oem No | Oem Old No | Pcs. | Ürün Tanımı | Description | Sizes | Not | G 221-9/10.19-1.0 | G 181-9/10.19-1.0 | | |
|---|---|---|---|---|---|---|---|---|---|---|---|---|
| 63 | K21.03372 | 945 262 7711 | (945 262 0511) | 1 | C VİTES DİŞLİSİ 39 DİŞ | GEAR CRAWLING GEAR 39 T. | | | ♦ | ♦ | | |
| | | | (945 262 7911) | | | | | | | | | |
| | | | (945 262 0911) | | | | | | | | | |
| | | | (945 262 7811) | | | | | | | | | |
| | | | (945 262 0611) | | | | | | | | | |
| 63 | | 945 262 8111 | (945 262 8211) | 1 | C VİTES DİŞLİSİ | GEAR CRAWLING GEAR | | (X) | ♦ | | | |
| | | | (945 262 8311) | | | | | | | | | |
| 64 | K21.03376 | 945 262 2035 | (945 262 2135) | 1 | GERİ VİTES YILDIZ DİŞLİ | SYNCHRONIZER HUB | | | ♦ | ♦ | | |
| 65 | K21.04343 | 387 262 2073 | | 1 | R./C.VİTES YILDIZ DİŞLİ SEKMANI | RETAINING RING | 2,40mm | | ♦ | ♦ | | |
| 65 | K21.06687 | 387 262 2173 | | 1 | R./C.VİTES YILDIZ DİŞLİ SEKMANI | RETAINING RING | 2,45mm | | ♦ | ♦ | | |
| 65 | K21.04342 | 007 994 0041 | (387 262 2273) | 1 | R./C.VİTES YILDIZ DİŞLİ SEKMANI | RETAINING RING | 2,50mm | | ♦ | ♦ | | |
| 65 | K21.04359 | 387 262 2373 | | 1 | R./C.VİTES YILDIZ DİŞLİ SEKMANI | RETAINING RING | 2,55mm | | ♦ | ♦ | | |
| 65 | K21.04345 | 387 262 2473 | | 1 | R./C.VİTES YILDIZ DİŞLİ SEKMANI | RETAINING RING | 2,60mm | | ♦ | ♦ | | |
| 65 | K21.07021 | 387 262 2573 | | 1 | R./C.VİTES YILDIZ DİŞLİ SEKMANI | RETAINING RING | 2,65mm | | ♦ | ♦ | | |
| 65 | K21.04344 | 387 262 7973 | | 1 | R./C.VİTES YILDIZ DİŞLİ SEKMANI | RETAINING RING | 2,70mm | | ♦ | ♦ | | |
| 65 | K21.07022 | 387 262 8073 | | 1 | R./C.VİTES YILDIZ DİŞLİ SEKMANI | RETAINING RING | 2,75mm | | ♦ | ♦ | | |
| 65 | K21.06588 | 387 262 8173 | | 1 | R./C.VİTES YILDIZ DİŞLİ SEKMANI | RETAINING RING | 2,80mm | | ♦ | ♦ | | |
| 66 | K21.03330 | 945 262 2023 | | 1 | GERİ VİTES HALKASI | ENGAGING SLEEVE | | | ♦ | ♦ | | |
| 66 | | 945 262 2123 | | 1 | GERİ VİTES HALKASI | ENGAGING SLEEVE | | (X) | ♦ | | | |
| 67 | K21.03410 | 947 265 0249 | (945 265 0149) | 2 | GERİ VİTES HİLAL PABUCU | SLIDING PAD | | | ♦ | ♦ | | |
| 68 | | 945 260 2530 | | 1 | GERİ VİTES HİLALİ | SHIFTING FORK | | | ♦ | ♦ | | |
| 69 | | 945 265 1104 | | 1 | GERİ VİTES HİLAL ÇITASI | SHIFTING ROD | | | ♦ | ♦ | | |
| 70 | K21.04307 | 960 265 0774 | (945 265 1274) | 2 | HİLAL CİVATASI | PIN | | | ♦ | ♦ | | |
| | | | (945 265 2974) | | | | | | | | | |
| | | | (945 265 2774) | | | | | | | | | |
| 71 | K21.03484 | 930 262 0333 | | 1 | GERİ VİTES DİŞLİSİ 36 DİŞ | REVERSE GEAR 36 T. | | (K) | ♦ | ♦ | | |
| 71 | K21.03378 | 945 262 3533 | (945 262 0633) | 1 | GERİ VİTES DİŞLİSİ 36 DİŞ | REVERSE GEAR 36 T. | | (L)(M) | ♦ | | | |
| | | | (945 262 3933) | | | | | | | | | |
| | | | (945 262 3733) | | | | | | | | | |
| | | | (945 262 3633) | | | | | | | | | |
| | | | (945 262 0833) | | | | | | | | | |
| | | | (945 262 0733) | | | | | | | | | |
| 72 | K21.03825 | 019 981 9010 | (020 981 0010) | 1 | GERİ VİTES MASURA BİLYA | NEEDLE CAGE | 84X90X48mm | | ♦ | ♦ | | |
| 73 | K21.03661 | 002 981 8181 | | 1 | KAMALI MİL ARKA BİLYA | ROLLER BEARING | 60X130X35,2mm | (K) | ♦ | ♦ | | |
| 73 | K21.03623 | 014 981 6105 | (016 981 1305) | 1 | KAMALI MİL ARKA BİLYA | ROLLER BEARING | 60X130X33,2mm | (L) | ♦ | | | |
| | | | (014 981 7505) | | | | | | | | | |
| 73 | K21.06277 | 012 981 3905 | | 1 | KAMALI MİL ARKA BİLYA | ROLLER BEARING | 60X130X33,2mm | (M) | ♦ | | | |
| 74 | K21.04182 | 389 262 3552 | | 1 | KAMALI MİL ARKA BİLYA RAYNELİ | THRUST WASHER | 0,10mm | | ♦ | ♦ | | |
| 74 | K21.04184 | 389 262 3652 | | 1 | KAMALI MİL ARKA BİLYA RAYNELİ | THRUST WASHER | 0,15mm | | ♦ | ♦ | | |
| 74 | K21.04152 | 389 262 3752 | | 1 | KAMALI MİL ARKA BİLYA RAYNELİ | THRUST WASHER | 0,20mm | | ♦ | ♦ | | |
| 74 | K21.94152 | | | 1 | KAMALI MİL ARKA BİLYA RAYNELİ | THRUST WASHER | 0,30mm | | ♦ | ♦ | | |
| 74 | K21.04183 | 389 262 3852 | | 1 | KAMALI MİL ARKA BİLYA RAYNELİ | THRUST WASHER | 0,40mm | | ♦ | ♦ | | |
| 74 | K21.94183 | | | 1 | KAMALI MİL ARKA BİLYA RAYNELİ | THRUST WASHER | 0,50mm | | ♦ | ♦ | | |
| 74 | K21.84183 | | | 1 | KAMALI MİL ARKA BİLYA RAYNELİ | THRUST WASHER | 0,60mm | | ♦ | ♦ | | |
| 74 | K21.74183 | | | 1 | KAMALI MİL ARKA BİLYA RAYNELİ | THRUST WASHER | 0,70mm | | ♦ | ♦ | | |
| 74 | K21.04185 | 389 262 3952 | | 1 | KAMALI MİL ARKA BİLYA RAYNELİ | THRUST WASHER | 0,80mm | | ♦ | ♦ | | |
| 74 | K21.06718 | 010 990 8382 | | 1 | KAMALI MİL ARKA BİLYA RAYNELİ | THRUST WASHER | 1,00mm | | ♦ | ♦ | | |
| 75 | K21.04131 | 389 262 3754 | | 1 | KAMALI MİL ARKA BİLYA PULU | THRUST WASHER | 18mm | (M) | ♦ | | | |
| 76 | K21.04331 | 007 994 1841 | (006 994 9941) | 1 | KAMALI MİL ARKA BİLYA SEKMANI | RETAINING RING | 2,50mm | | ♦ | ♦ | | |
| 77 | K21.04192 | 406 337 0252 | | 1 | GRUP MİLİ ÖN BİLYA RAYNELİ | THRUST WASHER | 0,10mm | | ♦ | ♦ | | |
| 77 | K21.04150 | 406 337 0352 | | 1 | GRUP MİLİ ÖN BİLYA RAYNELİ | THRUST WASHER | 0,20mm | | ♦ | ♦ | | |
| 77 | K21.94150 | | | 1 | GRUP MİLİ ÖN BİLYA RAYNELİ | THRUST WASHER | 0,25mm | | ♦ | ♦ | | |
| 77 | K21.04338 | 406 337 0452 | | 1 | GRUP MİLİ ÖN BİLYA RAYNELİ | THRUST WASHER | 0,30mm | | ♦ | ♦ | | |

NOTES :
Parts encoded alphabetic and numaric are used together.

NOTLAR :
Alfabetik ve rakam ile kodlanan parçalar birlikte kullanılır.





Original parts names, oem numbers, symbols and descriptions used in this catalogue are for reference purposes only.

# GEARBOX G 221-9/10,19-1,0 & G 181-9/10,19-1,0

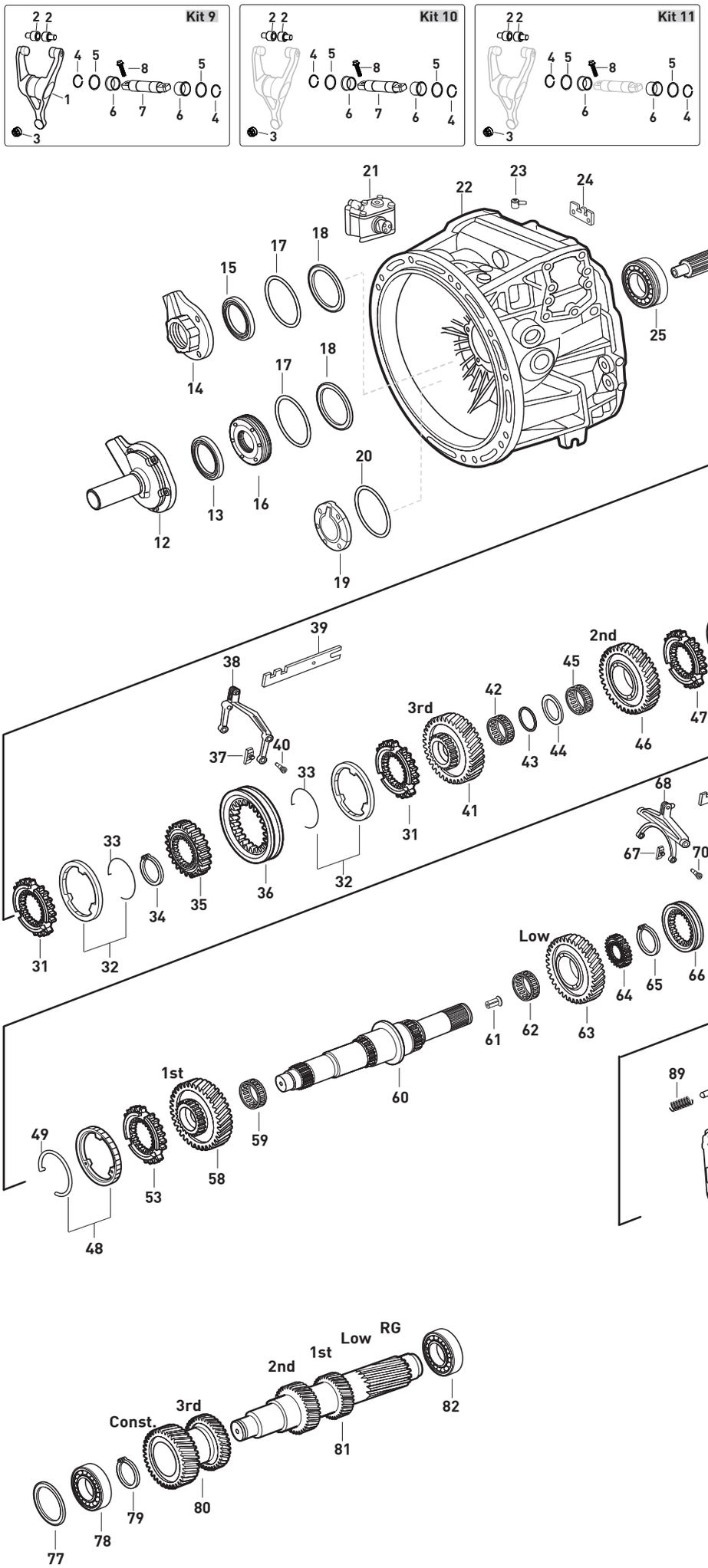




Original parts names, oem numbers, symbols and descriptions used in this catalogue are for reference purposes only.

| Fig. | Kacmaz No | Oem No | Oem Old No | Pcs. | Ürün Tanımı | Description | Sizes | Not | G 221-9/10.19-1.0 | G 181-9/10.19-1.0 | | |
|---|---|---|---|---|---|---|---|---|---|---|---|---|
| 77 | K21.04196 | 389 263 5352 | (389 263 3252) | 1 | GRUP MİLİ ÖN BİLYA RAYNELİ | THRUST WASHER | 0,40mm | | ♦ | ♦ | | |
| 77 | K21.04194 | 389 263 3352 | | 1 | GRUP MİLİ ÖN BİLYA RAYNELİ | THRUST WASHER | 0,45mm | | ♦ | ♦ | | |
| 77 | K21.06719 | 389 263 5652 | | 1 | GRUP MİLİ ÖN BİLYA RAYNELİ | THRUST WASHER | 0,49mm | | ♦ | ♦ | | |
| 77 | K21.04197 | 389 263 5852 | (389 263 3552) | 1 | GRUP MİLİ ÖN BİLYA RAYNELİ | THRUST WASHER | 0,55mm | | ♦ | ♦ | | |
| 77 | K21.04340 | 389 263 6052 | | 1 | GRUP MİLİ ÖN BİLYA RAYNELİ | THRUST WASHER | 0,61mm | | ♦ | ♦ | | |
| 77 | K21.04198 | 389 263 6352 | (389 263 3852) | 1 | GRUP MİLİ ÖN BİLYA RAYNELİ | THRUST WASHER | 0,70mm | | ♦ | ♦ | | |
| 77 | K21.04154 | 389 263 3952 | | 1 | GRUP MİLİ ÖN BİLYA RAYNELİ | THRUST WASHER | 0,75mm | | ♦ | ♦ | | |
| 77 | K21.04199 | 389 263 6852 | | 1 | GRUP MİLİ ÖN BİLYA RAYNELİ | THRUST WASHER | 0,85mm | | ♦ | ♦ | | |
| 77 | K21.04200 | 389 263 7352 | | 1 | GRUP MİLİ ÖN BİLYA RAYNELİ | THRUST WASHER | 1,00mm | | ♦ | ♦ | | |
| 77 | K21.04201 | 389 263 7852 | | 1 | GRUP MİLİ ÖN BİLYA RAYNELİ | THRUST WASHER | 1,15mm | | ♦ | ♦ | | |
| 77 | K21.04202 | 389 263 8352 | | 1 | GRUP MİLİ ÖN BİLYA RAYNELİ | THRUST WASHER | 1,30mm | | ♦ | ♦ | | |
| 78 | K21.03606 | 015 981 9005 | (014 981 1405) | 1 | GRUP MİLİ ÖN BİLYA | ROLLER BEARING | 50,8X100X35mm | | ♦ | ♦ | | |
| | | | (012 981 7405) | | | | | | | | | |
| | | | (012 981 5105) | | | | | | | | | |
| 79 | K21.06425 | 389 994 0041 | | 1 | GRUP MİLİ ÖN BİLYA SEKMANI | RETAINING RING | 2,50mm | | ♦ | ♦ | | |
| 80 | K21.03381 | 945 263 1813 | (945 263 1913) | 1 | MAKARA DİŞLİ 31/35 DİŞ | DOUBLE GEAR 31/35 T | | | ♦ | | | |
| | | | (945 263 1213) | | | | | | | | | |
| | | | (945 263 1313) | | | | | | | | | |
| 80 | | 945 263 5113 | | 1 | MAKARA DİŞLİ | DOUBLE GEAR Const-3rd | | | | ♦ | | |
| 81 | K21.03385 | 945 263 2202 | (945 263 0302) | 1 | GRUP MİLİ 12/20/25 DİŞ | COUNTER SHAFT 12/20/25 T. | | | ♦ | ♦ | | |
| | | | (945 263 0402) | | | | | | | | | |
| | | | (945 263 2302) | | | | | | | | | |
| 82 | K21.03624 | 016 981 1205 | (012 981 9405) | 1 | GRUP MİLİ ARKA BİLYA | ROLLER BEARING | 60X130X33,8mm | | ♦ | ♦ | | |
| | | | (012 981 9205) | | | | | | | | | |
| 83 | | 945 263 0231 | | 1 | KÜÇÜK GERİ VİTES 19 DİŞ | REVERSE IDLER GEAR 19 T. | | | ♦ | ♦ | | |
| 84 | K21.03838 | 012 981 8910 | (012 981 9010) | 1 | KÜÇÜK GERİ VİTES MASURA BİLYA | NEEDLE CAGE | 42X50X51mm | | ♦ | ♦ | | |
| | | | (019 981 1310) | | | | | | | | | |
| 85 | K21.06031 | 389 263 0850 | | 1 | K.GERİ VİTES MASURA BİLYA ÇANAĞI | BUSHING | 18mm | | ♦ | ♦ | | |
| 86 | K21.06037 | 976 263 0030 | (976 263 1230) | 1 | KÜÇÜK GERİ VİTES PİMİ | PIN | | | ♦ | ♦ | | |
| 87 | K21.07010 | 945 263 0041 | | 1 | KÜÇÜK GERİ VİTES PİM KİLİTLEMESİ | KEY | | | ♦ | ♦ | | |
| 88 | | 945 261 5126 | (945 261 8403) | 1 | ŞANZIMAN ORTA GÖVDE | HOUSING | | | ♦ | ♦ | | |
| 89 | | 389 993 0501 | | 1 | KİLİTLEME MİL YAYI | SPRING | | | ♦ | ♦ | | |
| 90 | K21.06046 | 945 268 0225 | | 1 | KİLİTLEME MİLİ | SHIFTING ROD | | | ♦ | ♦ | | |
| 91 | | 007993 012200 | | 1 | KİLİTLEME MİLİ SEKMANI | RETAINING RING | | | ♦ | ♦ | | |
| 92 | | 389 268 0051 | | 1 | KİLİTLEME MİL BURCU | SPACER RING | | | ♦ | ♦ | | |
| 93 | | 000998 006019 | | 1 | KİLİTLEME MİLİ AYAR RAYNELİ | FITTED WASHER | 0,10mm | | ♦ | ♦ | | |
| 93 | | 000998 006020 | | 1 | KİLİTLEME MİLİ AYAR RAYNELİ | FITTED WASHER | 0,20mm | | ♦ | ♦ | | |
| 93 | | 000988 006021 | | 1 | KİLİTLEME MİLİ AYAR RAYNELİ | FITTED WASHER | 0,30mm | | ♦ | ♦ | | |
| 93 | | 000988 006013 | | 1 | KİLİTLEME MİLİ AYAR RAYNELİ | FITTED WASHER | 0,50mm | | ♦ | ♦ | | |
| 93 | | 000988 006001 | | 1 | KİLİTLEME MİLİ AYAR RAYNELİ | FITTED WASHER | 1,00mm | | ♦ | ♦ | | |
| 94 | K21.03489 | 389 268 0674 | | 1 | KİLİTLEME MİL FİŞEĞİ | PIN | | | ♦ | ♦ | | |
| 95 | K21.03486 | 389 267 0974 | | 1 | AĞIR SERİ KİLİTLEME MİLİ | PIN | | | ♦ | ♦ | | |
| 96 | K21.06006 | 389 993 3401 | (389 993 0601) | 1 | AĞIR SERİ KİLİTLEME YAYI | SPRING | | | ♦ | ♦ | | |
| 97 | K21.04317 | | | Kit | RAYNEL TAKIMI | WASHER KIT | | | ♦ | ♦ | | |

NOTES :
Parts encoded alphabetic and numaric are used together.

NOTLAR :
Alfabetik ve rakam ile kodlanan parçalar birlikte kullanılır.





Original parts names, oem numbers, symbols and descriptions used in this catalogue are for reference purposes only.

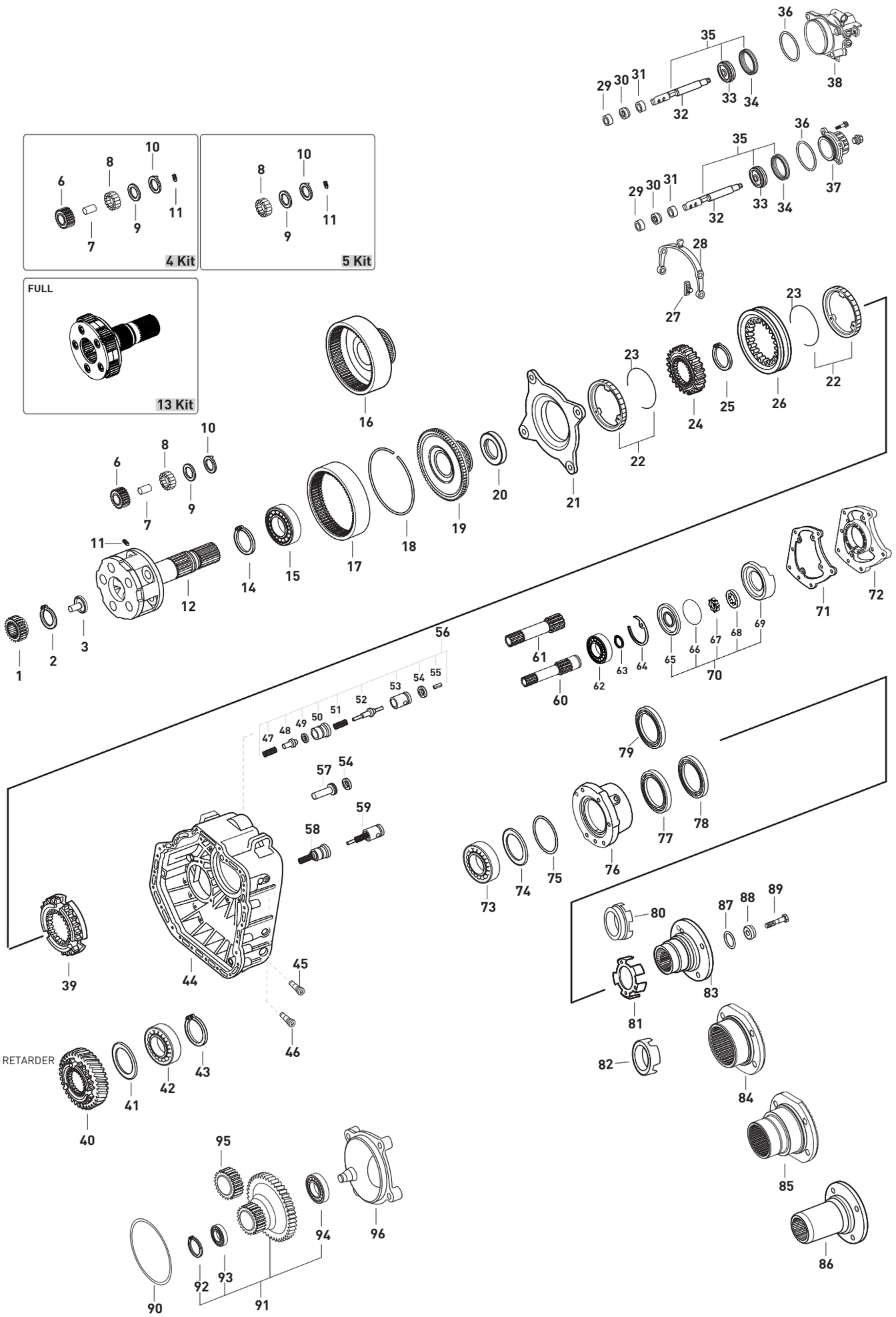




Original parts names, oem numbers, symbols and descriptions used in this catalogue are for reference purposes only.

| Fig. | Kacmaz No | Oem No | Oem Old No | Pcs. | Ürün Tanımı | Description | Sizes | Not | G 221-9/10.19-1.0 | G 181-9/10.19-1.0 |
|---|---|---|---|---|---|---|---|---|---|---|
| 1 | K21.03379 | 945 262 0109 | (945 262 0209) | 1 | GÜNEŞ DİŞLİ 30 DİŞ | SUN GEAR 30 T. | | (A) | ♦ | |
| 1 | K21.03169 | 945 262 0909 | (389 262 0809) | 1 | GÜNEŞ DİŞLİ 25 DİŞ | SUN GEAR 25 T. | | (B) | | ♦ |
| | | | (389 262 0909) | | | | | | | |
| 2 | K21.04115 | 000472 060000 | | 1 | HEYKEL YAĞ PİPET SEKMANI | SNAP RING | 2,00mm | | ♦ | ♦ |
| 3 | K21.03435 | 945 269 0834 | (389 269 4734) | 1 | ŞANZIMAN HEYKELİ YAĞ PİPETİ | OIL TUBE | | | ♦ | ♦ |
| 4 | K21.03387 | 945 260 0197 | | Kit | HEYKEL KOZA DİŞLİ TAKIMI | PLANETARY GEAR SET | | (A) | ♦ | |
| 4 | K21.03178 | 946 260 0097 | (655 260 0197) | Kit | HEYKEL KOZA DİŞLİ TAKIMI | PLANETARY GEAR SET | | (B) | | ♦ |
| 5 | K21.03663 | | | Kit | HEYKEL BİLYA VE PUL TAKIMI | WASHER KIT | | | ♦ | ♦ |
| 6 | K21.06081 | 945 262 0206 | | 5 | HEYKEL KOZA DİŞLİSİ 26 DİŞ | PLANETARY GEAR 26 T. | | (A) | ♦ | |
| 6 | K21.03436 | 945 262 0006 | | 5 | HEYKEL KOZA DİŞLİSİ 28 DİŞ | PLANETARY GEAR 28 T. | | (B) | | ♦ |
| 7 | K21.03437 | 389 262 0407 | | 5 | HEYKEL KOZA DİŞLİ PİMİ | PLANETARY GEAR PIN | | | ♦ | ♦ |
| 8 | K21.03816 | 000 981 4186 | (000 981 4386) | 125 | HEYKEL KOZA DİŞLİ TANE BİLYA | NEEDLE ROLLER | D5X39,6 | | ♦ | ♦ |
| 9 | K21.04074 | 389 262 0162 | (389 262 6462) | 10 | HEYKEL KOZA DİŞLİ PULU | THRUST WASHER | | | ♦ | ♦ |
| | | | (389 262 0562) | | | | | | | |
| 10 | K21.04075 | 945 262 1162 | (945 262 0162) | 10 | HEYKEL KOZA DİŞLİ PULU | THRUST WASHER | | | ♦ | ♦ |
| | | | (389 262 1462) | | | | | | | |
| 11 | K21.03418 | 000914 006109 | | 5 | HEYKEL KOZA DİŞLİ VİDASI | THREADED PIN | M6X14 | | ♦ | ♦ |
| 12 | K21.03388 | 946 260 4061 | (946 260 4161) | 1 | ŞANZIMAN HEYKELİ (BOŞ) | PLANETARY CARRIER (EMPTY) | | | ♦ | ♦ |
| | | | (945 260 1961) | | | | | | | |
| | | | (945 260 2061) | | | | | | | |
| 13 | K21.03686 | | | Kit | ŞANZIMAN HEYKELİ (DOLU) | PLANETARY CARRIER (FULL) | | (A) | ♦ | |
| 14 | K21.06864 | 000472 130000 | | 1 | ÇEMBER DİŞLİ BİLYA SEKMANI | RETAINING RING | 130X4mm | | ♦ | ♦ |
| 15 | K21.03614 | 008 981 1325 | (004 981 8725) | 1 | ÇEMBER DİŞLİ BİLYASI | ROLLER BEARING | 90X130X14mm | | ♦ | ♦ |
| | | | (004 981 8825) | | | | | | | |
| | | | (004 981 9425) | | | | | | | |
| 16 | K21.03438 | 945 262 0108 | (389 262 0808) | 1 | ÇEMBER DİŞLİ 85 DİŞ | RING WHEEL 85 T. | | | ♦ | |
| 17 | K21.03440 | 945 262 0208 | | 1 | ÇEMBER DİŞLİ 85 DİŞ | RING WHEEL 85 T. | | | ♦ | |
| 17 | K21.03449 | 945 262 1208 | (945 262 0808) | 1 | ÇEMBER DİŞLİ 85 DİŞ | RING WHEEL 85 T. | | | | ♦ |
| 18 | K21.04253 | 389 262 0773 | | 1 | ÇEMBER DİŞLİ SEKMANI | LOCK RING | | | ♦ | ♦ |
| 19 | K21.03442 | 930 262 0125 | (389 262 1425) | 1 | PLANET ÇAN DİŞLİ 85 DİŞ | CARRIER HUB 85 T. | | | ♦ | ♦ |
| 20 | K21.04076 | 389 262 0251 | | 1 | ŞANZIMAN HEYKELİ ARA PULU | SPACER RING | | | ♦ | ♦ |
| 21 | K21.03018 | 389 260 2036 | | 1 | TABLA SENKROMENÇ | FOLLOWER RING | | (1) | ♦ | |
| 21 | K21.03037 | 947 260 3036 | | 1 | TABLA SENKROMENÇ | FOLLOWER RING | | (2) | ♦ | ♦ |
| 22 | K21.03017 | 389 262 0537 | (389 262 0037) | 2 | AĞIR SERİ FRENLEME (Mo) | SYNCHRONIZING CONE / Mo | | (1) | ♦ | |
| | | | (389 262 0137) | | | | | | | |
| | | | (389 262 3337) | | | | | | | |
| 22 | K21.03078 | 945 260 0850 | | 2 | AĞIR SERİ FRENLEME (C) | SYNCHRONIZING CONE / C | | (1) | ♦ | |
| 22 | K21.03185 | 947 260 0945 | | 2 | AĞIR SERİ FRENLEME (Mo) | SYNCHRONIZING CONE / Mo | | (2) | ♦ | ♦ |
| 22 | K21.06273 | 947 260 3045 | | 2 | AĞIR SERİ FRENLEME (C) | SYNCHRONIZING CONE / C | | (2) | ♦ | ♦ |
| 23 | K21.03077 | 389 262 0293 | | 2 | FRENLEME TELİ | SPRING | | | ♦ | ♦ |
| 24 | K21.03079 | 389 262 4935 | (389 262 2035) | 1 | AĞIR SERİ YILDIZ DİŞLİ 73 DİŞ | SYNCHRONIZER HUB 73 T. | | | ♦ | ♦ |
| | | | (400 262 0335) | | | | | | | |
| 25 | K21.04356 | 000471 120000 | | 1 | AĞIR SERİ YILDIZ DİŞLİ SEKMANI | RETAINING RING | | | ♦ | ♦ |
| 26 | K21.03028 | 945 262 6623 | (945 262 0823) | 1 | AĞIR SERİ HALKA 73 DİŞ | ENGAGING SLEEVE 73 T. | | (1) | ♦ | |
| | | | (389 262 1623) | | | | | | | |
| | | | (389 262 3823) | | | | | | | |
| | | | (945 262 2623) | | | | | | | |
| 26 | K21.03033 | 945 262 6923 | (930 262 0623) | 1 | AĞIR SERİ HALKA | ENGAGING SLEEVE | | (2) | ♦ | ♦ |
| 27 | K21.03406 | 389 265 2449 | (945 265 0349) | 2 | AĞIR SERİ HİLAL PABUCU | SLIDING PAD | | (1) | ♦ | |
| | | | (387 265 0049) | | | | | | | |
| | | | (389 265 0949) | | | | | | | |
| | | | (389 265 1249) | | | | | | | |
| 27 | K21.03431 | 960 265 0049 | (947 265 0349) | 2 | AĞIR SERİ HİLAL PABUCU | SLIDING PAD | | (2) | ♦ | ♦ |

NOTES :
Parts encoded alphabetic and numaric are used together.

NOTLAR :
Alfabetik ve rakam ile kodlanan parçalar birlikte kullanılır.





Original parts names, oem numbers, symbols and descriptions used in this catalogue are for reference purposes only.

# GEARBOX G 221-9/10,19-1,0 & G 181-9/10,19-1,0

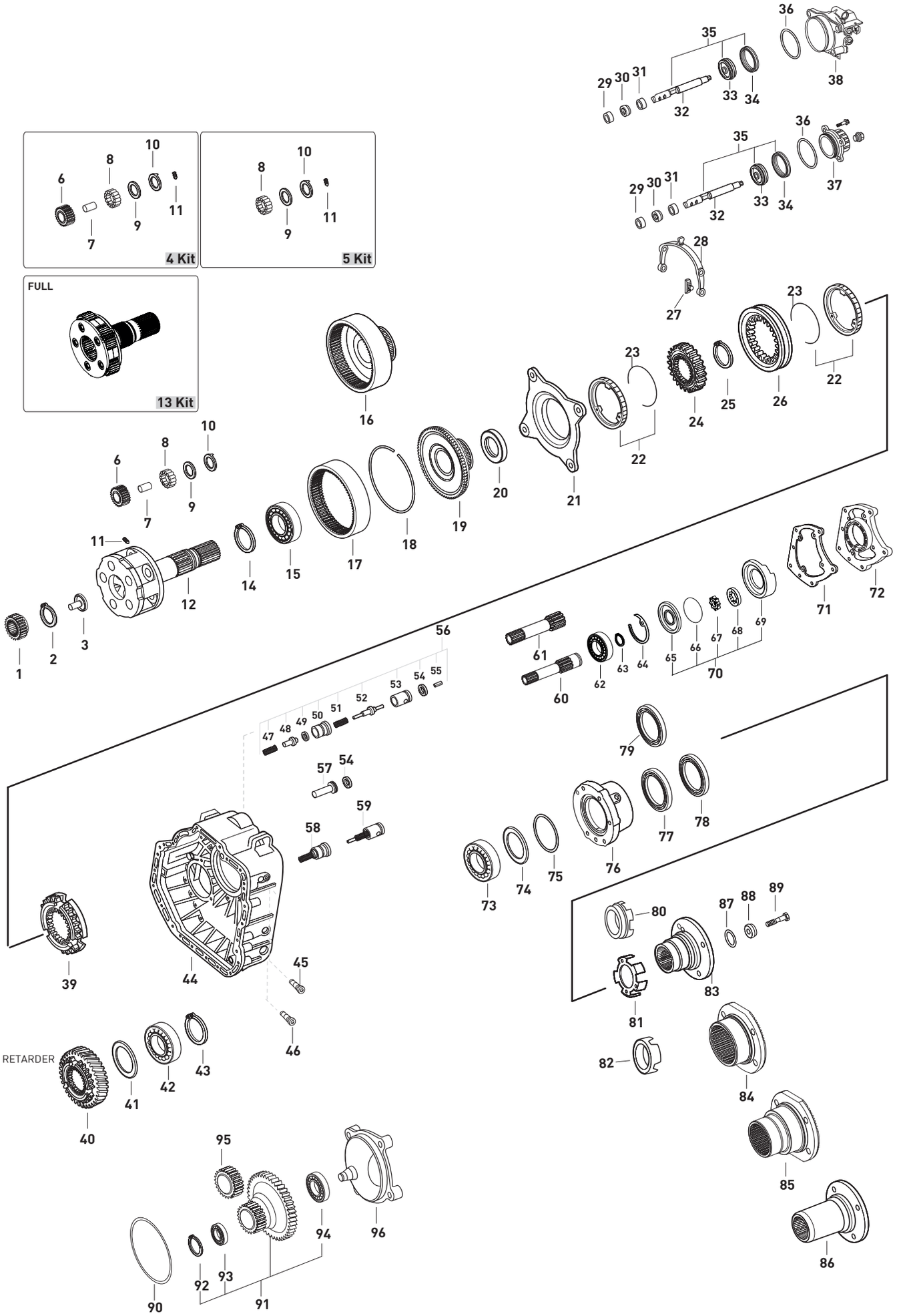




Original parts names, oem numbers, symbols and descriptions used in this catalogue are for reference purposes only.

| Fig. | Kacmaz No | Oem No | Oem Old No | Pcs. | Ürün Tanımı | Description | Sizes | Not | G 221-9/10.19-1.0 | G 181-9/10.19-1.0 | | |
|---|---|---|---|---|---|---|---|---|---|---|---|---|
| 28 | K21.06411 | 947 265 1701 | (389 265 0901) | 1 | AĞIR SERİ HİLALİ | SHIFTING FORK | | (1) | ♦ | | | |
| | | | (930 265 0001) | | | | | | | | | |
| | | | (947 265 0801) | | | | | | | | | |
| 28 | K21.06324 | 947 265 1901 | (947 265 0901) | 1 | AĞIR SERİ HİLALİ | SHIFTING FORK | | (2) | ♦ | ♦ | | |
| 29 | K21.04254 | 000 992 7703 | (389 267 2250) | 1 | AĞIR SERİ HİLAL MİL BURCU | BUSHING | 21X25X20mm | | ♦ | ♦ | | |
| 30 | K21.03523 | 000 267 0197 | (000 267 0397) | 1 | AĞIR SERİ HİLAL MİL KEÇESİ | OIL SEAL | 22X32X8mm | | ♦ | ♦ | | |
| 31 | K21.04178 | 387 267 0650 | (387 267 0250) | 1 | AĞIR SERİ HİLAL MİL BURCU | BUSHING | 34X22X8mm | | ♦ | ♦ | | |
| 32 | | 930 267 2617 | | 1 | AĞIR SERİ HİLAL MİLİ | SHIFTING ROD | | (K) | ♦ | | | |
| 32 | | 945 267 2117 | (389 267 7317) | 1 | AĞIR SERİ HİLAL MİLİ | SHIFTING ROD | | (L) | ♦ | | | |
| 32 | | 389 267 3517 | | 1 | AĞIR SERİ HİLAL MİLİ | SHIFTING ROD | | (M) | ♦ | ♦ | | |
| 33 | K21.06975 | 389 267 0118 | (389 267 1018) | 1 | AĞIR SERİ HİLAL MİL PİSTONU | PISTON | | | ♦ | ♦ | | |
| 34 | K21.03525 | 024 997 8347 | (020 997 6747) | 1 | AĞIR SERİ SİLİNDİR KEÇESİ | SEAL RING | 77X90X17mm | | ♦ | ♦ | | |
| | | | (014 997 3647) | | | | | | | | | |
| | | | (014 997 5147) | | | | | | | | | |
| 35 | | 930 260 2989 | | 1 | AĞIR SERİ HİLAL MİLİ KOMPLE | SHIFTING ROD COMPLETE | | (K) | ♦ | | | |
| 35 | | 930 260 2789 | | 1 | AĞIR SERİ HİLAL MİLİ KOMPLE | SHIFTING ROD COMPLETE | | (L) | ♦ | | | |
| 35 | | 930 260 2589 | | 1 | AĞIR SERİ HİLAL MİLİ KOMPLE | SHIFTING ROD COMPLETE | | (M) | ♦ | | | |
| 36 | K21.06399 | 013 997 7548 | | 1 | AĞIR SERİ SİLİNDİR ORİNGİ | O-RING | 89,5X3mm | | ♦ | ♦ | | |
| 37 | K21.03540 | 945 267 1119 | (389 267 1319) | 1 | AĞIR SERİ SİLİNDİRİ | SHIFTING CYLINDER | | | ♦ | ♦ | | |
| | | | (389 267 4219) | | | | | | | | | |
| | | | (945 267 1319) | | | | | | | | | |
| | | | (945 267 1619) | | | | | | | | | |
| 38 | K21.03541 | 001 260 4963 | | 1 | AĞIR SERİ SİLİNDİRİ | SHIFTING CYLINDER | | | ♦ | ♦ | | |
| 39 | K21.03187 | 389 262 9234 | (945 262 1234) | 1 | SERİ SENKROMENÇ | ENGAGING RING | | (1) | ♦ | | | |
| 39 | K21.03186 | 945 262 3834 | | 1 | SERİ SENKROMENÇ | ENGAGING RING | | (2) | ♦ | ♦ | | |
| 40 | K21.06050 | 945 264 0130 | (389 264 0730) | 1 | RETARDER DİŞLİSİ 63 DİŞ | RETARDER GEAR 63 T. | | (1) | ♦ | | | |
| 40 | K21.03188 | 930 264 0320 | | 1 | RETARDER DİŞLİSİ 64 DİŞ | RETARDER GEAR 64 T. | | (2) | ♦ | ♦ | | |
| 40 | | 945 264 0520 | | 1 | RETARDER DİŞLİSİ 63 DİŞ | RETARDER GEAR 63 T. | | (2) | ♦ | | | |
| 41 | | 387 264 0064 | | 1 | YAĞ TOPLAMA SACI | OIL BAFFLE | | | ♦ | | | |
| 42 | | 007 981 8201 | (007 981 8701) | 1 | ŞANZIMAN HEYKEL BİLYASI | BEARING | 103X140X26mm | (U) | ♦ | | | |
| 43 | | 000472 140000 | | 1 | HEYKEL BİLYA SEKMANI | LOCK RING | 140X4mm | | ♦ | | | |
| 44 | | 945 260 6812 | | 1 | ŞANZIMAN ARKA GÖVDE | HOUSING | | | ♦ | ♦ | | |
| 45 | K21.06026 | 945 265 3074 | (945 265 1474) | 2 | HİLAL CİVATASI | PIN | | (1) | ♦ | | | |
| | | | (945 265 1774) | | | | | | | | | |
| | | | (945 265 2674) | | | | | | | | | |
| 46 | K21.04307 | 960 265 0774 | (945 265 1974) | 2 | HİLAL CİVATASI | PIN | | (2) | ♦ | ♦ | | |
| | | | (945 265 1574) | | | | | | | | | |
| | | | (945 265 1274) | | | | | | | | | |
| 47 | | 389 993 5301 | | 1 | YAĞ BASINÇ YAYI | SPRING | | | ♦ | ♦ | | |
| 48 | | 389 269 1026 | (389 269 0926) | 1 | YAĞ BASINÇ VALFİ | SELECTOR VALVE | | | ♦ | ♦ | | |
| 49 | K21.04210 | 013 997 0148 | (020 997 8348) | 1 | YAĞ BASINÇ ORİNGİ | O-RING | 13,3X2,4mm | | ♦ | ♦ | | |
| 50 | | 389 269 1444 | (389 269 0744) | 1 | YAĞ BASINÇ VALF GÖVDESİ | VALVE INSERT | | | ♦ | ♦ | | |
| 51 | | 389 993 4401 | | 1 | YAĞ BASINÇ VALF MİL YAYI | SPRING | 11,5X41,9X1mm | | ♦ | ♦ | | |
| 52 | | 389 269 0826 | | 1 | YAĞ BASINÇ VALF MİLİ | SELECTOR VALVE | | | ♦ | ♦ | | |
| 53 | | 389 269 0844 | | 1 | YAĞ BASINÇ VALF TOPU | BALL | | | ♦ | ♦ | | |
| 54 | K21.04212 | 013 997 0048 | (020 997 8248) | 1 | YAĞ BASINÇ VALF ORİNGİ | O-RING | 19,2X3mm | | ♦ | ♦ | | |
| 55 | | 001481 004049 | (001481 004001) | 1 | EMNİYET PİMİ | CLAMPING SLEEVE | | | ♦ | ♦ | | |
| 56 | K21.06962 | 655 260 0157 | | Kit | YAĞ BASINÇ VALFİ KOMPLE | VALVE KIT | | | ♦ | ♦ | | |
| 57 | K21.06979 | 389 265 0176 | (389 265 0076) | 1 | YAĞ BASINÇ VALFİ ALIN FİBERİ | WASHER | | | ♦ | ♦ | | |
| 58 | K21.06953 | 960 260 1057 | | Kit | YAĞ BASINÇ VALFİ KOMPLE | VALVE KIT | | | ♦ | ♦ | | |
| 58 | K21.06988 | 960 260 2257 | | Kit | YAĞ BASINÇ VALFİ KOMPLE | VALVE KIT | | | | ♦ | | |
| 59 | K21.06973 | 960 260 1257 | | Kit | YAĞ BASINÇ VALFİ KOMPLE | VALVE KIT | | | ♦ | ♦ | | |
| 59 | K21.06989 | 960 260 2157 | (960 260 3757) | Kit | YAĞ BASINÇ VALFİ KOMPLE | VALVE KIT | | | | ♦ | | |

NOTES :
Parts encoded alphabetic and numaric are used together.

NOTLAR :
Alfabetik ve rakam ile kodlanan parçalar birlikte kullanılır.





Original parts names, oem numbers, symbols and descriptions used in this catalogue are for reference purposes only.

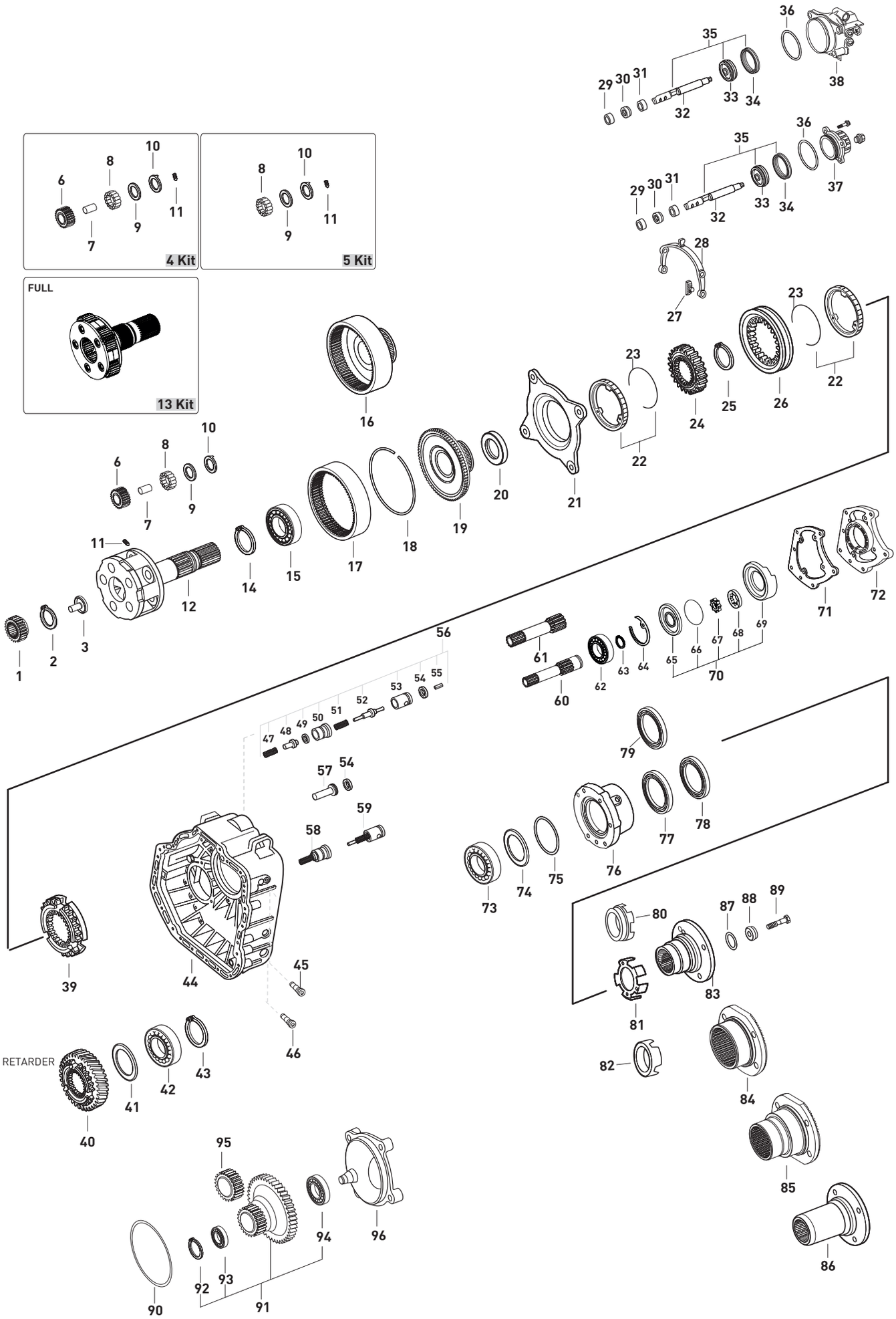




Original parts names, oem numbers, symbols and descriptions used in this catalogue are for reference purposes only.

| Fig. | Kacmaz No | Oem No | Oem Old No | Pcs. | Ürün Tanımı | Description | Sizes | Not | G 221-9/10.19-1.0 | G 181-9/10.19-1.0 | | |
|---|---|---|---|---|---|---|---|---|---|---|---|---|
| 60 | K21.03085 | 947 264 0005 | (389 269 0310) | 1 | YAĞ POMPA MİLİ | OIL PUMP SHAFT | | (3) | ♦ | | | |
| | | | (389 269 1210) | | | | | | | | | |
| 61 | K21.03198 | 947 269 1010 | (945 269 1010) | 1 | YAĞ POMPA MİLİ | OIL PUMP SHAFT | | (4) | ♦ | ♦ | | |
| 61 | K21.06298 | 947 269 1110 | (945 269 1110) | 1 | YAĞ POMPA MİLİ | OIL PUMP SHAFT | | (4) | ♦ | ♦ | | |
| 61 | K21.06310 | 389 269 1310 | | 1 | YAĞ POMPA MİLİ | OIL PUMP SHAFT | | (4) | ♦ | | | |
| 62 | K21.03613 | 004 981 9225 | (004 981 8625) | 1 | PTO MİL BİLYASI | ROLLER BEARING | 45X75X16mm | (3) | ♦ | | | |
| | | | (004 981 9025) | | | | | | | | | |
| 62 | K21.03648 | 010 981 9025 | (010 981 8425) | 1 | PTO MİL BİLYASI | ROLLER BEARING | 17X35X10mm | (4) | ♦ | ♦ | | |
| | | | (008 981 5425) | | | | | | | | | |
| | | | (008 981 3425) | | | | | | | | | |
| 63 | K21.06964 | 000471 045000 | (003 994 3741) | 1 | PTO MİL BİLYA SEKMANI | RETAINING RING | 1,75mm | (3) | ♦ | | | |
| 63 | | 912009 045100 | | 1 | PTO MİL BİLYA SEKMANI | RETAINING RING | | (4) | ♦ | ♦ | | |
| 64 | K21.94304 | | | 1 | YAĞ POMPA PULU | SPACER WASHER | 0,70mm | | ♦ | ♦ | | |
| 64 | K21.04304 | 389 262 6254 | | 1 | YAĞ POMPA PULU | SPACER WASHER | 0,80mm | | ♦ | ♦ | | |
| 64 | K21.04303 | 389 262 5954 | | 1 | YAĞ POMPA PULU | SPACER WASHER | 0,90mm | | ♦ | ♦ | | |
| 64 | K21.04302 | 389 262 5754 | | 1 | YAĞ POMPA PULU | SPACER WASHER | 1,00mm | | ♦ | ♦ | | |
| 64 | K21.04301 | 389 262 5554 | | 1 | YAĞ POMPA PULU | SPACER WASHER | 1,10mm | | ♦ | ♦ | | |
| 64 | K21.04305 | 389 262 5354 | | 1 | YAĞ POMPA PULU | SPACER WASHER | 1,20mm | | ♦ | ♦ | | |
| 65 | K21.03412 | 945 269 0201 | (389 269 2501) | 1 | YAĞ POMPA KAPAĞI | OIL PUMP COVER | | | ♦ | ♦ | | |
| 65 | K21.03558 | 947 264 0287 | | 1 | YAĞ POMPA KAPAĞI | OIL PUMP COVER | | PTO | ♦ | | | |
| 66 | K21.03511 | 029 997 5748 | | 1 | YAĞ POMPA ORİNGİ | O-RING | 112X2,5mm | | ♦ | ♦ | | |
| 67 | K21.03413 | 389 269 1406 | (389 269 1506) | 1 | YAĞ POMPA İÇ ROTOR | OIL PUMP GEAR | | | ♦ | ♦ | | |
| | | | (945 260 0090) | | | | | | | | | |
| 68 | K21.03414 | 389 269 0706 | (389 269 1206) | 1 | YAĞ POMPA DIŞ ROTOR | ROTOR | | | ♦ | ♦ | | |
| 69 | K21.03478 | 947 269 1001 | | 1 | YAĞ POMPA GÖVDESİ | OIL PUMP HOUSING | | (M) | ♦ | ♦ | | |
| 69 | K21.03415 | 389 269 3801 | | 1 | YAĞ POMPA GÖVDESİ | OIL PUMP HOUSING | | (N) | ♦ | | | |
| 70 | K21.03475 | 389 260 0790 | | 1 | YAĞ POMPASI | OIL PUMP | | (M) | ♦ | ♦ | | |
| 70 | K21.03411 | 389 260 0690 | (389 260 0590) | 1 | YAĞ POMPASI | OIL PUMP | | (N) | ♦ | | | |
| 71 | K21.04306 | 945 261 0280 | | 1 | PTO KAPAK CONTASI | GASKET | | | ♦ | | | |
| 71 | K21.03667 | 945 261 0680 | (945 261 0580) | 1 | PTO KAPAK CONTASI | GASKET | | | | ♦ | | |
| | | | (945 261 0080) | | | | | | | | | |
| 72 | K21.03566 | 945 261 1033 | (945 261 1433) | 1 | PTO KAPAĞI | COVER | | | ♦ | ♦ | | |
| | | | (400 261 1133) | | | | | | | | | |
| 73 | K21.03625 | 008 981 3025 | (008 981 5225) | 1 | ŞANZIMAN ARKA BİLYA | ROLLER BEARING | 80X150X28mm | | ♦ | ♦ | | |
| | | | (007 981 3325) | | | | | | | | | |
| 74 | K21.04081 | 389 262 7754 | | 1 | ŞANZIMAN HEYKEL AYAR PULU | THRUST WASHER | 1,40mm | | ♦ | | | |
| 74 | K21.04139 | 389 262 5152 | | 1 | ŞANZIMAN HEYKEL AYAR PULU | THRUST WASHER | 0,80mm | | ♦ | | | |
| 74 | K21.04080 | 389 262 5052 | | 1 | ŞANZIMAN HEYKEL AYAR PULU | THRUST WASHER | 0,40mm | | ♦ | | | |
| 74 | K21.04079 | 389 262 7654 | | 1 | ŞANZIMAN HEYKEL AYAR PULU | THRUST WASHER | 0,25mm | | ♦ | | | |
| 74 | K21.04140 | 389 262 4952 | | 1 | ŞANZIMAN HEYKEL AYAR PULU | THRUST WASHER | 0,20mm | | ♦ | | | |
| 74 | K21.04141 | 389 262 4852 | | 1 | ŞANZIMAN HEYKEL AYAR PULU | THRUST WASHER | 0,15mm | | ♦ | | | |
| 74 | K21.04078 | 389 262 4752 | | 1 | ŞANZIMAN HEYKEL AYAR PULU | THRUST WASHER | 0,10mm | | ♦ | | | |
| 75 | K21.06713 | 015 997 2848 | (020 997 8548) | 1 | ŞANZIMAN ARKA KAPAK ORİNGİ | O-RING | 149,5X3mm | | ♦ | ♦ | | |
| 76 | K21.06238 | 389 261 1920 | (389 261 2020) | 1 | ŞANZIMAN ARKA KAPAK | COVER | | | ♦ | ♦ | | |
| 76 | K21.06239 | 930 261 0420 | (930 261 0520) | 1 | ŞANZIMAN ARKA KAPAK | COVER | | RETARDER | ♦ | ♦ | | |
| | | | (389 261 1820) | | | | | | | | | |
| 77 | K21.03507 | 013 997 7347 | (015 997 4247) | 1 | ŞANZIMAN ARKA KEÇE | OIL SEAL | 95X115X13/12mm | | ♦ | | | |
| | | | (013 997 5647) | | | | | | | | | |
| 78 | K21.03528 | 013 997 7247 | (014 997 1947) | 1 | ŞANZIMAN ARKA KEÇE | OIL SEAL | 95X115X13mm | | ♦ | | | |
| | | | (013 997 5547) | | | | | | | | | |
| 78 | | 015 997 6647 | (015 997 6447) | 1 | ŞANZIMAN ARKA KEÇE | OIL SEAL | 115X140X12mm | (U) | ♦ | | | |
| 79 | K21.03512 | 015 997 7846 | (023 997 1647) | 1 | ŞANZIMAN ARKA KEÇE | OIL SEAL | 95X115X15,5mm | | ♦ | ♦ | | |
| 80 | | 945 262 0628 | (389 260 0350) | 1 | ŞANZIMAN KM DEVİR SACI | PULSE STAR | | (8) | ♦ | | | |

NOTES :
Parts encoded alphabetic and numaric are used together.

NOTLAR :
Alfabetik ve rakam ile kodlanan parçalar birlikte kullanılır.





Original parts names, oem numbers, symbols and descriptions used in this catalogue are for reference purposes only.

# GEARBOX G 221-9/10,19-1,0 & G 181-9/10,19-1,0

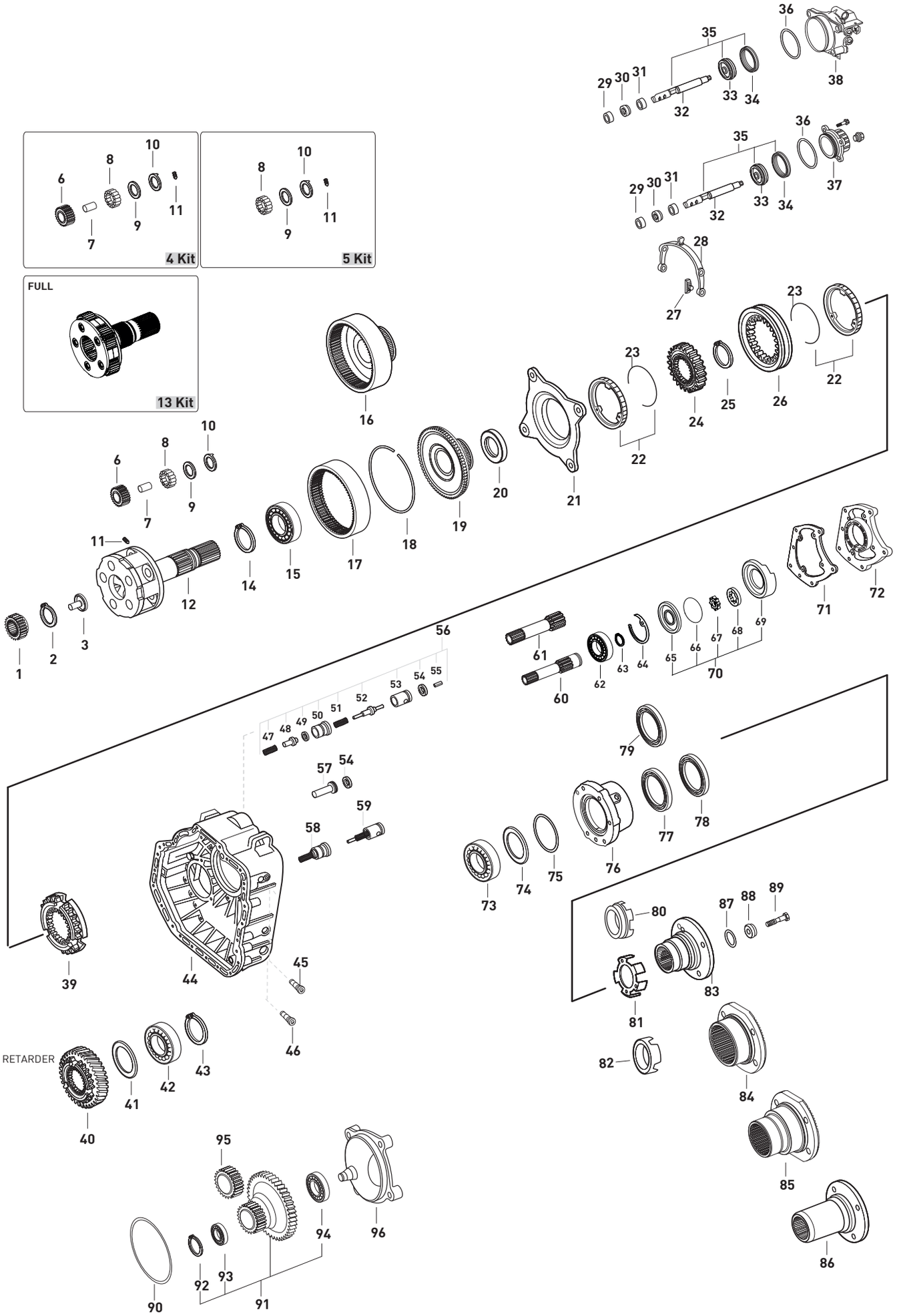




Original parts names, oem numbers, symbols and descriptions used in this catalogue are for reference purposes only.

| Fig. | Kacmaz No | Oem No | Oem Old No | Pcs. | Ürün Tanımı | Description | Sizes | Not | G 221-9/10.19-1.0 | G 181-9/10.19-1.0 | | |
|---|---|---|---|---|---|---|---|---|---|---|---|---|
| 81 | K21.04134 | 930 262 0028 | | 1 | ŞANZIMAN KM DEVİR SACI | PULSE STAR | | (6)(10) | ♦ | ♦ | | |
| 82 | | 945 262 0228 | | 1 | ŞANZIMAN KM DEVİR SACI | PULSE STAR | | (9) | ♦ | | | |
| 83 | K21.03196 | 945 262 0045 | | 1 | ŞANZIMAN FLANŞI | COMPANION FLANGE | 4-H, Ø180mm | (6) | ♦ | ♦ | | |
| 84 | K21.03129 | 389 262 0645 | | 1 | ŞANZIMAN FLANŞI | COMPANION FLANGE | 4-H, Ø200mm | (8)(9) | ♦ | | | |
| 84 | | 389 262 0945 | | 1 | ŞANZIMAN FLANŞI | COMPANION FLANGE | 4-H, Ø200mm | (8) | ♦ | | | |
| 85 | | 389 262 0545 | | 1 | ŞANZIMAN FLANŞI | COMPANION FLANGE | 4-H, Ø180mm | (8) | ♦ | | | |
| 85 | K21.03443 | 930 262 0245 | | 1 | ŞANZIMAN FLANŞI | COMPANION FLANGE | 4-H, Ø180mm | (10) | ♦ | | | |
| 86 | | 387 264 1945 | | 1 | ŞANZIMAN FLANŞI | COMPANION FLANGE | Ø198mm | (8)(U) | ♦ | | | |
| 86 | | 387 264 2045 | | 1 | ŞANZIMAN FLANŞI | COMPANION FLANGE | Ø198mm | (8)(U) | ♦ | | | |
| 86 | | 945 262 0445 | | 1 | ŞANZIMAN FLANŞI | COMPANION FLANGE | Ø200mm | (8)(U) | ♦ | | | |
| 86 | | 945 262 0545 | | 1 | ŞANZIMAN FLANŞI | COMPANION FLANGE | Ø200mm | (8)(U) | ♦ | | | |
| 87 | K21.04310 | 014 997 5148 | (020 997 8648) | 1 | ŞANZIMAN FLANŞ ORİNGİ | O-RING | 72,4X5,3mm | | ♦ | | | |
| 87 | | 025 997 5345 | | 1 | ŞANZIMAN FLANŞ ORİNGİ | O-RING | 70,8X5,1mm | | ♦ | ♦ | | |
| 87 | K21.06978 | 015 997 4348 | | 1 | ŞANZIMAN FLANŞ ORİNGİ | O-RING | 25X3mm | (M) | ♦ | ♦ | | |
| 88 | K21.04214 | 945 262 0762 | | 1 | ŞANZIMAN FLANŞI ALIN PULU | THRUST WASHER | 93X20mm | (K) | ♦ | ♦ | | |
| 88 | K21.06977 | 389 262 0362 | (945 262 0062) | 1 | ŞANZIMAN FLANŞI ALIN PULU | THRUST WASHER | 95X24mm | (L) | ♦ | ♦ | | |
| 88 | K21.06283 | 387 264 1162 | | 1 | ŞANZIMAN FLANŞI ALIN PULU | THRUST WASHER | | (M) | ♦ | ♦ | | |
| 89 | K21.06280 | 000000 006750 | (000000 005728) | 1 | ŞANZIMAN FLANŞI ALIN VİDASI | SCREW | M20X1,5X80 | (K) | ♦ | ♦ | | |
| 89 | K21.06028 | 945 990 0019 | (389 990 2019) | 1 | ŞANZIMAN FLANŞI ALIN VİDASI | SCREW | M24X2X85 | (L) | ♦ | ♦ | | |
| | | | (389 990 0219) | | | | | | | | | |
| 89 | K21.06281 | 387 990 1719 | | 1 | ŞANZIMAN FLANŞI ALIN VİDASI | SCREW | M24X2X95 | (M) | ♦ | ♦ | | |
| 90 | | 017 997 9145 | (028 997 8148) | 1 | ŞANZIMAN ARKA KAPAK ORİNGİ | O-RING | 198X3mm | | ♦ | | | |
| 91 | K21.06311 | 930 264 0921 | | 1 | DİREKSİYON POMPA DİŞLİSİ | GEAR | | | ♦ | | | |
| 92 | | 000983 020000 | | 1 | DİREK.POMPA DİŞLİ BİLYA SEKMANI | RETAINING RING | | | ♦ | | | |
| 93 | | 000625 006004 | | 1 | DİREKSİYON POMPA DİŞLİ ÖN BİLYA | ROLLER BEARING | | | ♦ | | | |
| 94 | | 000625 506007 | | 1 | DİREKSİYON POMPA DİŞLİ ARKA BİLYA | ROLLER BEARING | | | ♦ | | | |
| 95 | K21.03671 | 930 264 0721 | | 1 | DİREKSİYON POMPA DİŞLİ KARŞILIĞI | GEAR | | | ♦ | | | |
| 96 | K21.06300 | 930 264 0111 | (930 264 0211) | 1 | DİREKSİYON POMPA KAPAĞI | HOUSING | | | ♦ | | | |

NOTES :
Parts encoded alphabetic and numaric are used together.

NOTLAR :
Alfabetik ve rakam ile kodlanan parçalar birlikte kullanılır.





Original parts names, oem numbers, symbols and descriptions used in this catalogue are for reference purposes only.

SYNCHRONIZER KIT Const./3rd
OLD MODEL (1)

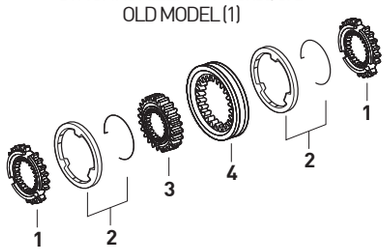


| Fig. | Kacmaz No. | Oem No | Oem Old No | Pcs. | Ürün Tanımı | Description |
|---|---|---|---|---|---|---|
| | K21.06483 | | | Kit | PRİZ./3.VİTES SENK.KİT | SYNCH.KIT Const./3rd |
| 1 | K21.03024 | 389 262 5434 | (945 262 0334) | 2 | PRİZ./3.VİTES SENKROMENÇ | ENGAGING RING |
| 2 | K21.03015 | 389 262 0637 | (387 262 0837) | 2 | PRİZ./3.VİT.FRENLEME(Mo) | SYNCHRONIZING CONE/Mo |
| 3 | K21.06077 | 945 262 3735 | | 1 | PRİZ./3.VİTES YILDIZ DİŞLİ | SYNCHRONIZER HUB |
| 4 | K21.03002 | 945 262 2823 | (945 262 0323) | 1 | PRİZDİREK VE 3.VİTES HALKA | ENGAGING SLEEVE |

SYNCHRONIZER KIT Const./3rd
OLD MODEL (2)

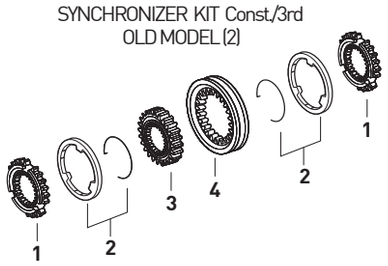


| Fig. | Kacmaz No. | Oem No | Oem Old No | Pcs. | Ürün Tanımı | Description |
|---|---|---|---|---|---|---|
| | K21.06221 | | | Kit | PRİZ./3.VİTES SENK.KİT | SYNCH.KIT Const./3rd |
| 1 | K21.03024 | 389 262 5434 | (945 262 0334) | 2 | PRİZ./3.VİTES SENKROMENÇ | ENGAGING RING |
| 2 | K21.03015 | 389 262 0637 | (387 262 0837) | 2 | PRİZ./3.VİT.FRENLEME(Mo) | SYNCHRONIZING CONE/Mo |
| 3 | K21.03366 | 945 262 1835 | (945 262 1935) | 1 | PRİZ./3.VİTES YILDIZ DİŞLİ | SYNCHRONIZER HUB |
| 4 | K21.03002 | 945 262 2823 | (945 262 0323) | 1 | PRİZDİREK VE 3.VİTES HALKA | ENGAGING SLEEVE |

SYNCHRONIZER KIT Const./3rd
OLD MODEL

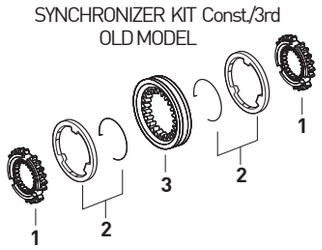


| Fig. | Kacmaz No. | Oem No | Oem Old No | Pcs. | Ürün Tanımı | Description |
|---|---|---|---|---|---|---|
| | K21.06524 | | | Kit | PRİZ./3.VİTES SENK.KİT | SYNCH.KIT Const./3rd |
| 1 | K21.03024 | 389 262 5434 | (945 262 0334) | 2 | PRİZ./3.VİT.SENKROMENÇ | ENGAGING RING |
| 2 | K21.03015 | 389 262 0637 | (387 262 0837) | 2 | PRİZ./3.VİT.FRENLEME(Mo) | SYNCHRONIZING CONE/Mo |
| 3 | K21.03002 | 945 262 2823 | (945 262 0323) | 1 | PRİZDİREK VE 3.VİTES HALKA | ENGAGING SLEEVE |

SYNCHRONIZER KIT Const./3rd
NEW MODEL (1)

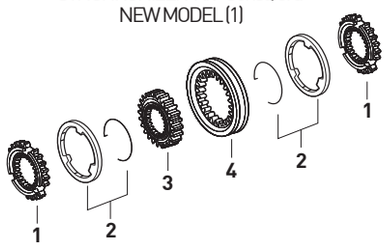


| Fig. | Kacmaz No. | Oem No | Oem Old No | Pcs. | Ürün Tanımı | Description |
|---|---|---|---|---|---|---|
| | K21.06220 | | | Kit | PRİZ./3.VİTES SENK.KİT | SYNCH.KIT Const./3rd |
| 1 | K21.03147 | 945 262 7734 | (945 262 3634) | 2 | PRİZ./3.VİT.SENKROMENÇ | ENGAGING RING |
| 2 | K21.03136 | 945 260 2245 | (946 262 6337) | 2 | PRİZ./3.VİT.FRENLEME(Mo) | SYNCHRONIZING CONE/Mo |
| 3 | K21.06077 | 945 262 3735 | | 1 | PRİZ./3.VİTES YILDIZ DİŞLİ | SYNCHRONIZER HUB |
| 4 | K21.03137 | 945 262 6823 | (945 262 6423) | 1 | PRİZDİREK VE 3.VİTES HALKA | ENGAGING SLEEVE |

SYNCHRONIZER KIT Const./3rd
NEW MODEL (2)

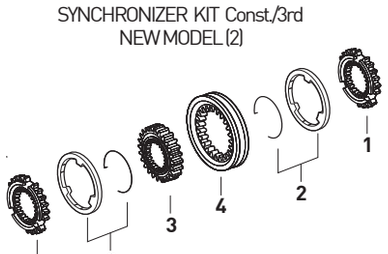


| Fig. | Kacmaz No. | Oem No | Oem Old No | Pcs. | Ürün Tanımı | Description |
|---|---|---|---|---|---|---|
| | K21.06484 | | | Kit | PRİZ./3.VİTES SENK.KİT | SYNCH.KIT Const./3rd |
| 1 | K21.03147 | 945 262 7734 | (945 262 3634) | 2 | PRİZ./3.VİT.SENKROMENÇ | ENGAGING RING |
| 2 | K21.03136 | 945 260 2245 | (946 262 6337) | 2 | PRİZ./3.VİT.FRENLEME(Mo) | SYNCHRONIZING CONE/Mo |
| 3 | K21.03366 | 945 262 1835 | (945 262 1935) | 1 | PRİZ./3.VİTES YILDIZ DİŞLİ | SYNCHRONIZER HUB |
| 4 | K21.03137 | 945 262 6823 | (945 262 6423) | 1 | PRİZDİREK VE 3.VİTES HALKA | ENGAGING SLEEVE |

SYNCHRONIZER KIT Const./3rd
NEW MODEL

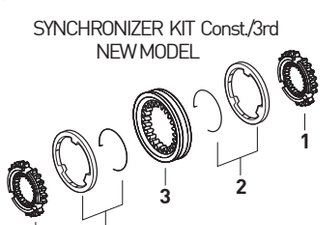


| Fig. | Kacmaz No. | Oem No | Oem Old No | Pcs. | Ürün Tanımı | Description |
|---|---|---|---|---|---|---|
| | K21.06523 | | | Kit | PRİZ./3.VİTES SENK.KİT | SYNCH.KIT Const./3rd |
| 1 | K21.03147 | 945 262 7734 | (945 262 3634) | 2 | PRİZ./3.VİT.SENKROMENÇ | ENGAGING RING |
| 2 | K21.03136 | 945 260 2245 | (946 262 6337) | 2 | PRİZ./3.VİT.FRENLEME(Mo) | SYNCHRONIZING CONE/Mo |
| 3 | K21.03137 | 945 262 6823 | (945 262 6423) | 1 | PRİZDİREK VE 3.VİTES HALKA | ENGAGING SLEEVE |

SYNCHRONIZER KIT 1st/2nd
NEW MODEL




| Fig. | Kacmaz No. | Oem No | Oem Old No | Pcs. | Ürün Tanımı | Description |
|---|---|---|---|---|---|---|
| | K21.06222 | | | Kit | 1./2.VİT.SENKROMENÇ KİT | SYNCH.KIT 1st/2nd |
| 1 | K21.03146 | 945 262 8234 | (945 262 5434) | 1 | 2.VİTES SENKROMENÇ | ENGAGING RING |
| 2 | K21.03148 | 947 260 1945 | (947 260 4645) | 2 | 1./2.VİTES FRENLEME (Mo) | SYNCHRONIZING CONE/Mo |
| | | | (946 262 6137) | | | |
| 3 | K21.03161 | 389 262 2535 | (945 262 0135) | 1 | 1./2.VİTES YILDIZ DİŞLİ | SYNCHRONIZER HUB |
| 4 | K21.03151 | 945 262 6523 | (930 262 0523) | 1 | 1./2.VİTES HALKA | ENGAGING SLEEVE |
| 5 | K21.03160 | 945 262 5534 | | 1 | 1./2.VİTES SENKROMENÇ | ENGAGING RING |



**Original parts names, oem numbers, symbols and descriptions used in this catalogue are for reference purposes only.**

| Fig. | Kacmaz No. | Oem No | Oem Old No | Pcs. | Ürün Tanımı | Description |
|---|---|---|---|---|---|---|
| | K21.06859 | | | Kit | 1./2.VİTES SENK.KİT | SYNCH.KIT 1st/2nd |
| 1 | K21.03146 | 945 262 8234 | (945 262 5434) | 1 | 2.VİTES SENKROMENÇ | ENGAGING RING |
| 2 | K21.03148 | 947 260 1945 | (947 260 4645) | 2 | 1./2.VİTES FRENLEME (Mo) | SYNCHRONIZING CONE / Mo |
| | | | (946 262 6137) | | | |
| 3 | K21.03151 | 945 262 6523 | (930 262 0523) | 1 | 1./2.VİTES HALKA | ENGAGING SLEEVE |
| 4 | K21.03160 | 945 262 5534 | | 1 | 1./2.VİTES SENKROMENÇ | ENGAGING RING |

SYNCHRONIZER KIT 1st/2nd
NEW MODEL

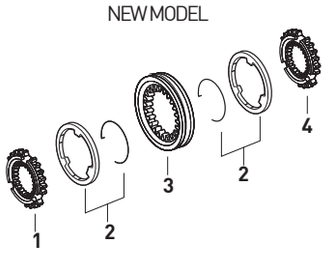


| Fig. | Kacmaz No. | Oem No | Oem Old No | Pcs. | Ürün Tanımı | Description |
|---|---|---|---|---|---|---|
| | K21.06223 | | | Kit | 1./2.VİTES SENK.KİT | SYNCH.KIT 1st/2nd |
| 1 | K21.03027 | 945 262 0534 | (389 262 5034) | 1 | 2.VİTES SENKROMENÇ | ENGAGING RING |
| 2 | K21.03016 | 389 262 0737 | (387 262 0937) | 2 | 1./2.VİT.FRENLEME (Mo) | SYNCHRONIZING CONE / Mo |
| 3 | K21.03161 | 389 262 2535 | (945 262 0135) | 1 | 1./2.VİTES YILDIZ DİŞLİ | SYNCHRONIZER HUB |
| 4 | K21.03009 | 945 262 2723 | (945 262 0423) | 1 | 1./2.VİTES HALKA | ENGAGING SLEEVE |
| | | | (389 262 2623) | | | |
| 5 | K21.03025 | 945 262 0434 | (389 262 0034) | 1 | 1.VİTES SENKROMENÇ | ENGAGING RING |

SYNCHRONIZER KIT 1st/2nd
OLD MODEL

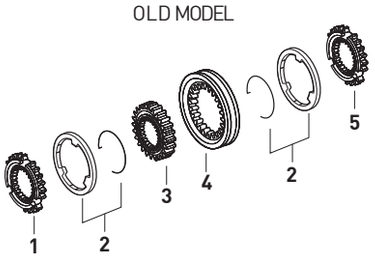


| Fig. | Kacmaz No. | Oem No | Oem Old No | Pcs. | Ürün Tanımı | Description |
|---|---|---|---|---|---|---|
| | K21.06216 | | | Kit | AĞIR SERİ SENK.KİT | SYNCH.KIT PLANETARY |
| 1 | K21.03037 | 947 260 3036 | (947 260 0836) | 1 | TABLA SENKROMENÇ | FOLLOWER RING |
| 2 | K21.03185 | 947 260 0945 | | 2 | AĞIR SERİ FRENLEME (Mo) | SYNCHRONIZING CONE / Mo |
| 3 | K21.03079 | 389 262 4935 | (389 262 2035) | 1 | A.SERİ YILDIZ DİŞLİ 73 DİŞ | SYNCHRONIZER HUB 73 T. |
| 4 | K21.03033 | 945 262 6923 | (930 262 0623) | 1 | AĞIR SERİ HALKA | ENGAGING SLEEVE |
| 5 | K21.03431 | 960 265 0049 | (947 265 0349) | 2 | A.SERİ HİLAL PABUCU | SLIDING PAD |
| 6 | K21.03186 | 945 262 3834 | | 1 | SERİ SENKROMENÇ | ENGAGING RING |

SYNCHRONIZER KIT PLANETARY
NEW MODEL

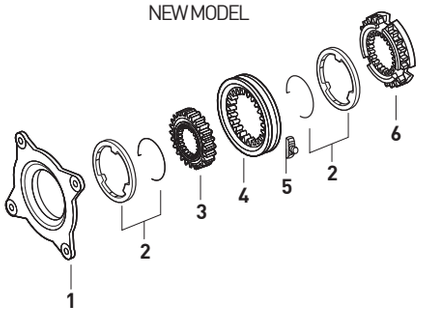


| Fig. | Kacmaz No. | Oem No | Oem Old No | Pcs. | Ürün Tanımı | Description |
|---|---|---|---|---|---|---|
| | K21.06518 | | | Kit | AĞIR SERİ.SENK.KİT | SYNCH.KIT PLANETARY |
| 1 | K21.03037 | 947 260 3036 | (947 260 0836) | 1 | TABLA SENKROMENÇ | FOLLOWER RING |
| 2 | K21.03185 | 947 260 0945 | | 2 | AĞIR SERİ FRENLEME (Mo) | SYNCHRONIZING CONE /Mo |
| 3 | K21.03033 | 945 262 6923 | (930 262 0623) | 1 | AĞIR SERİ HALKA | ENGAGING SLEEVE |
| 4 | K21.03431 | 960 265 0049 | (947 265 0349) | 2 | A.SERİ HİLAL PABUCU | SLIDING PAD |
| 5 | K21.03186 | 945 262 3834 | | 1 | SERİ SENKROMENÇ | ENGAGING RING |

SYNCHRONIZER KIT PLANETARY
NEW MODEL

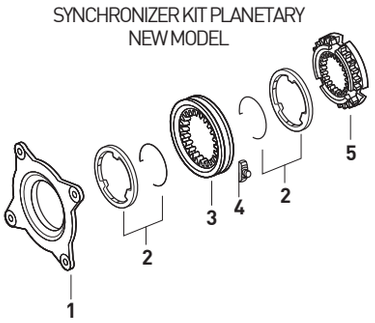


| Fig. | Kacmaz No. | Oem No | Oem Old No | Pcs. | Ürün Tanımı | Description |
|---|---|---|---|---|---|---|
| | K21.06204 | | | Kit | AĞIR SERİ SENK.KİT | SYNCH.KIT PLANETARY |
| 1 | K21.03185 | 947 260 0945 | | 2 | AĞIR SERİ FRENLEME (Mo) | SYNCHRONIZING CONE / Mo |
| 2 | K21.03079 | 389 262 4935 | (389 262 2035) | 1 | A.SERİ YILDIZ DİŞLİ 73 DİŞ | SYNCHRONIZER HUB 73 T. |
| 3 | K21.03033 | 945 262 6923 | (930 262 0623) | 1 | AĞIR SERİ HALKA | ENGAGING SLEEVE |
| 4 | K21.03431 | 960 265 0049 | (947 265 0349) | 2 | A.SERİ HİLAL PABUCU | SLIDING PAD |

SYNCHRONIZER KIT PLANETARY
NEW MODEL

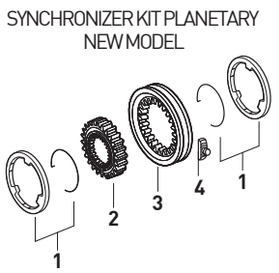


| Fig. | Kacmaz No. | Oem No | Oem Old No | Pcs. | Ürün Tanımı | Description |
|---|---|---|---|---|---|---|
| | K21.06217 | | | Kit | AĞIR SERİ SENK.KİT | SYNCH.KIT PLANETARY |
| 1 | K21.03018 | 389 260 2036 | | 1 | TABLA SENKROMENÇ | FOLLOWER RING |
| 2 | K21.03017 | 389 262 0537 | (389 262 0037) | 2 | AĞIR SERİ FRENLEME (Mo) | SYNCHRONIZING CONE / Mo |
| 3 | K21.03079 | 389 262 4935 | (389 262 2035) | 1 | A.SERİ YILDIZ DİŞLİ 73 DİŞ | SYNCHRONIZER HUB 73 T. |
| 4 | K21.03028 | 945 262 6623 | (945 262 0823) | 1 | AĞIR SERİ HALKA 73 DİŞ | ENGAGING SLEEVE 73 T. |
| | | | (389 262 1623) | | | |
| 5 | K21.03406 | 389 265 2449 | (389 265 1249) | 2 | A.SERİ HİLAL PABUCU | SLIDING PAD |
| 6 | K21.03187 | 389 262 9234 | (945 262 1234) | 1 | SERİ SENKROMENÇ | ENGAGING RING |

SYNCHRONIZER KIT PLANETARY
OLD MODEL

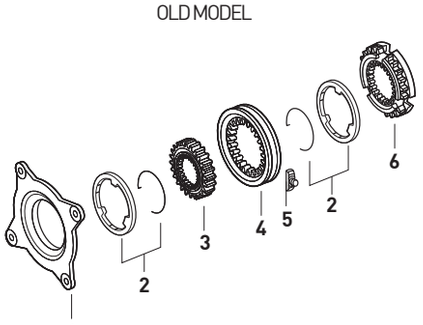




Original parts names, oem numbers, symbols and descriptions used in this catalogue are for reference purposes only.

SYNCHRONIZER KIT PLANETARY
OLD MODEL

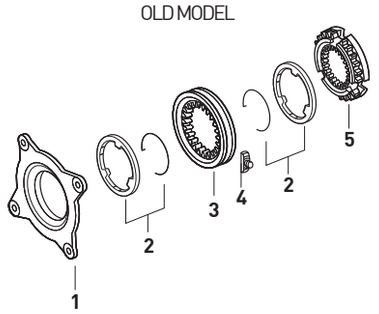


| Fig. | Kacmaz No. | Oem No | Oem Old No | Pcs. | Ürün Tanımı | Description |
|---|---|---|---|---|---|---|
| | K21.06520 | | | Kit | AĞIR SERİ SENK.KİT | SYNCH.KIT PLANETARY |
| 1 | K21.03018 | 389 260 2036 | | 1 | TABLA SENKROMENÇ | FOLLOWER RING |
| 2 | K21.03017 | 389 262 0537 | (389 262 0037) | 2 | AĞIR SERİ FRENLEME (Mo) | SYNCHRONIZING CONE / Mo |
| 3 | K21.03028 | 945 262 6623 | (945 262 2623) | 1 | AĞIR SERİ HALKA 73 DİŞ | ENGAGING SLEEVE 73 T. |
| | | | (945 262 0823) | | | |
| 4 | K21.03406 | 389 265 2449 | (389 265 1249) | 2 | A.SERİ HİLAL PABUCU | SLIDING PAD |
| 5 | K21.03187 | 389 262 9234 | (945 262 1234) | 1 | SERİ SENKROMENÇ | ENGAGING RING |

SYNCHRONIZER KIT PLANETARY
OLD MODEL

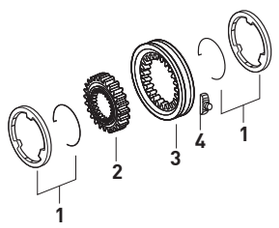


| Fig. | Kacmaz No. | Oem No | Oem Old No | Pcs. | Ürün Tanımı | Description |
|---|---|---|---|---|---|---|
| | K21.06194 | | | Kit | AĞIR SERİ SENK.KİT | SYNCH.KIT PLANETARY |
| 1 | K21.03017 | 389 262 0537 | (389 262 0037) | 2 | AĞIR SERİ FRENLEME | SYNCHRONIZING CONE |
| 2 | K21.03079 | 389 262 4935 | (389 262 2035) | 1 | A.SERİ YILDIZ DİŞLİ 73 DİŞ | SYNCHRONIZER HUB 73 T. |
| 3 | K21.03028 | 945 262 6623 | (945 262 0823) | 1 | AĞIR SERİ HALKA 73 DİŞ | ENGAGING SLEEVE 73 T. |
| | | | (389 262 1623) | | | |
| 4 | K21.03406 | 389 265 2449 | (389 265 1249) | 2 | A.SERİ HİLAL PABUCU | SLIDING PAD |

P.T.O. (POWER TAKE OFF)

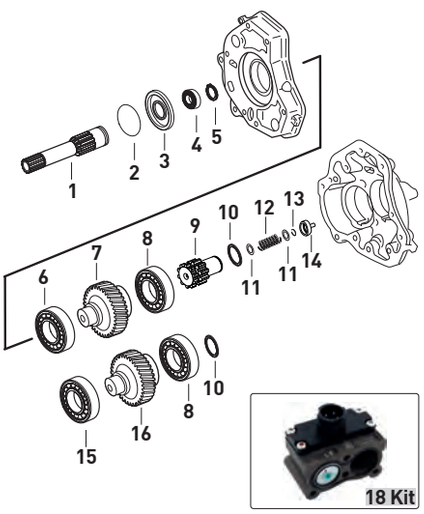


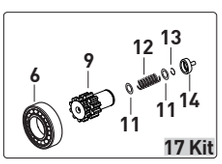


| Fig. | Kacmaz No. | Oem No | Oem Old No | Pcs. | Ürün Tanımı | Description |
|---|---|---|---|---|---|---|
| 1 | K21.03085 | 947 264 0005 | (389 269 0310) | 1 | YAĞ POMPA MİLİ | OIL PUMP SHAFT |
| 1 | K21.03670 | 947 264 0105 | | 1 | YAĞ POMPA MİLİ (RETARDER) | OIL PUMP SHAFT |
| 2 | K21.03511 | 029 997 5748 | | 1 | YAĞ POMPA KAPAK ORİNGİ | O-RING |
| 3 | K21.03558 | 947 264 0287 | | 1 | YAĞ POMPA KAPAĞI | OIL PUMP COVER |
| 4 | K21.03613 | 004 981 9225 | (004 981 8625) | 1 | PTO MİL BİLYASI | ROLLER BEARING |
| 5 | K21.06964 | 000471 045000 | (003 994 3741) | 1 | PTO MİL BİLYA SEKMANI | RETAINING RING |
| 6 | K21.06998 | 017 981 1705 | | 1 | PTO BORU DİŞLİ BİLYASI | ROLLER BEARING |
| 7 | | 947 260 4708 | | 1 | PTO BORU DİŞLİ | GEAR |
| 8 | | 017 981 1805 | | 2 | PTO BORU DİŞLİ BİLYASI | ROLLER BEARING |
| 9 | K21.04334 | 945 264 0006 | | 1 | PTO ARA ADAPTÖR MİLİ | INTERM.SHAFT |
| 10 | | 387 264 3652 | | 2 | BİLYA AYAR RAYNELİ | THRUST WASHER |
| 10 | | 387 264 3752 | | 2 | BİLYA AYAR RAYNELİ | THRUST WASHER |
| 10 | | 387 264 3852 | | 2 | BİLYA AYAR RAYNELİ | THRUST WASHER |
| 11 | | 000988 022010 | | 2 | BİLYA AYAR PULU | THRUST WASHER |
| 12 | K21.04333 | 385 993 5201 | | 1 | YAY | SPRING |
| 13 | | 912009 022100 | | 1 | BİLYA AYAR PUL SEKMANI | RETAINING RING |
| 14 | K21.04332 | 000625 000629 | | 1 | PTO MİL ŞAPKASI | PTO SHAFT CAP |
| 15 | | 016 981 6705 | | 1 | PTO BORU DİŞLİ BİLYASI | ROLLER BEARING |
| 16 | | 947 264 0621 | (947 264 0521) | 1 | PTO BORU DİŞLİ | GEAR |
| 17 | K21.04362 | | | kit | ARA ADAPTÖR MİLİ KOMPLE | INTERM.SHAFT COMP. |
| 18 | K21.06346 | 970 260 0457 | | kit | P.T.O VENTİLİ | VALVE |



**Original parts names, oem numbers, symbols and descriptions used in this catalogue are for reference purposes only.**

# NOTES / NOTLAR



Original parts names, oem numbers, symbols and descriptions used in this catalogue are for reference purposes only.

# GEARBOX G 140-8 / 9,30 - 0,79

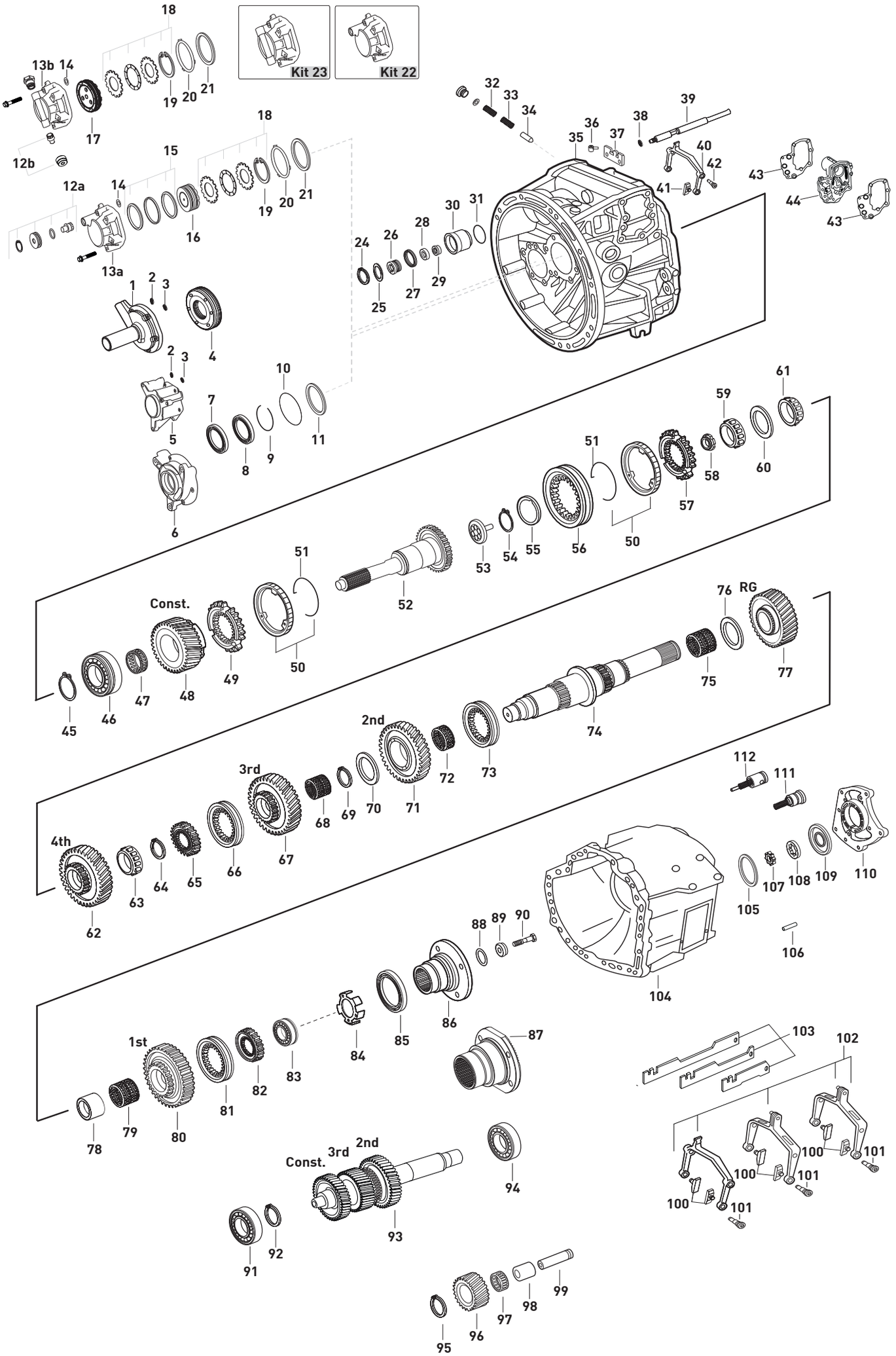




Original parts names, oem numbers, symbols and descriptions used in this catalogue are for reference purposes only.

| Fig. | Kacmaz No | Oem No | Oem Old No | Pcs. | Ürün Tanımı | Description | Sizes | Not | G140-8 |
|---|---|---|---|---|---|---|---|---|---|
| 1 | K21.03429 | 945 261 1118 | (945 261 0118) | 1 | PRİZDİREK KEÇE KAPAĞI | COVER | | | ♦ |
| | | | (945 261 0818) | | | | | | ♦ |
| 2 | K21.06637 | 019 997 8348 | (020 997 7948) | 1 | PRİZDİREK KEÇE KAPAK ORİNGİ | O-RING | 14X4mm | | ♦ |
| 3 | K21.06636 | 015 997 4048 | (020 997 8748) | 1 | PRİZDİREK KEÇE KAPAK ORİNGİ | O-RING | 5X3mm | | ♦ |
| 3 | | 023 997 7748 | (021 997 4548) | 1 | PRİZDİREK KEÇE KAPAK ORİNGİ | O-RING | 13X2mm | | ♦ |
| | | | (022 997 7748) | | | | | | |
| 4 | K21.06038 | 389 261 0665 | (389 261 0765) | 1 | YAĞ TUTUCU DİSK | OIL BAFFLE | 75X16mm | | ♦ |
| | | | (389 261 0865) | | | | | | |
| 5 | | 960 261 2818 | | 1 | PRİZDİREK KEÇE KAPAĞI | COVER | | | ♦ |
| 6 | | 960 261 2518 | (960 261 2318) | 1 | PRİZDİREK KEÇE KAPAĞI | COVER | | | ♦ |
| 7 | K21.03509 | 019 997 0547 | (023 997 7847) | 1 | PRİZDİREK KEÇESİ | OIL SEAL | 56X72X8mm | | ♦ |
| | | | (019 997 0647) | | | | | | |
| | | | (022 997 8547) | | | | | | |
| 8 | | 014 997 9946 | | 1 | YAĞ TUTUCU KEÇE | OIL SEAL | 56X72X6mm | | ♦ |
| 9 | | 003 994 3240 | | 1 | YAĞ TUTUCU KEÇE SEKMANI | RETAINING RING | | | ♦ |
| 10 | K21.06635 | 020 997 7848 | | 1 | PRİZDİREK KEÇE KAPAK ORİNGİ | O-RING | 138X3mm | | ♦ |
| 11 | K21.04162 | 389 262 4152 | (389 262 0955) | 1 | PRİZDİREK AYAR RAYNELİ | THRUST WASHER | 0,10mm | | ♦ |
| 11 | K21.04243 | 389 262 0855 | | 1 | PRİZDİREK AYAR RAYNELİ | THRUST WASHER | 0,15mm | | ♦ |
| 11 | K21.04151 | 389 262 0755 | | 1 | PRİZDİREK AYAR RAYNELİ | THRUST WASHER | 0,20mm | | ♦ |
| 11 | K21.06715 | 389 262 3055 | | 1 | PRİZDİREK AYAR RAYNELİ | THRUST WASHER | 0,25mm | | ♦ |
| 11 | K21.04221 | 389 262 3255 | | 1 | PRİZDİREK AYAR RAYNELİ | THRUST WASHER | 0,31mm | | ♦ |
| 11 | K21.04163 | 389 262 3555 | (389 262 0655) | 1 | PRİZDİREK AYAR RAYNELİ | THRUST WASHER | 0,40mm | | ♦ |
| | | | (389 262 4452) | | | | | | |
| 11 | K21.04164 | 389 262 3755 | (389 262 1954) | 1 | PRİZDİREK AYAR RAYNELİ | THRUST WASHER | 0,46mm | | ♦ |
| 11 | K21.04246 | 389 262 3855 | | 1 | PRİZDİREK AYAR RAYNELİ | THRUST WASHER | 0,49mm | | ♦ |
| 11 | K21.04250 | 389 262 4055 | (389 262 0155) | 1 | PRİZDİREK AYAR RAYNELİ | THRUST WASHER | 0,55mm | | ♦ |
| | | | (389 262 2154) | | | | | | |
| 11 | K21.04167 | 389 262 4255 | (389 262 2254) | 1 | PRİZDİREK AYAR RAYNELİ | THRUST WASHER | 0,61mm | | ♦ |
| 11 | K21.04168 | 389 262 4355 | (389 262 2354) | 1 | PRİZDİREK AYAR RAYNELİ | THRUST WASHER | 0,64mm | | ♦ |
| 11 | K21.04169 | 389 262 4555 | (389 262 2454) | 1 | PRİZDİREK AYAR RAYNELİ | THRUST WASHER | 0,70mm | | ♦ |
| 11 | K21.04170 | 389 262 4755 | (389 262 2554) | 1 | PRİZDİREK AYAR RAYNELİ | THRUST WASHER | 0,76mm | | ♦ |
| 11 | K21.04281 | 389 262 4855 | (389 262 0555) | 1 | PRİZDİREK AYAR RAYNELİ | THRUST WASHER | 0,79mm | | ♦ |
| 11 | K21.04282 | 389 262 5555 | | 1 | PRİZDİREK AYAR RAYNELİ | THRUST WASHER | 1,00mm | | ♦ |
| 11 | K21.04171 | 389 262 9654 | (389 262 2654) | 1 | PRİZDİREK AYAR RAYNELİ | THRUST WASHER | 2,00mm | | ♦ |
| 12a | K21.06498 | 930 260 0058 | | 1 | HAVALANDIRMA TAMİR TAKIMI | REPAIR KIT | | (K) | ♦ |
| 12b | K21.07027 | 960 260 0058 | | 1 | HAVALANDIRMA TAMİR TAKIMI | REPAIR KIT | | (L) | ♦ |
| 13a | K21.06301 | 960 261 1933 | | 1 | GRUP DURDURUCU KAPAĞI | COVER | | (K) | ♦ |
| 13b | K21.06949 | 960 261 4133 | | 1 | GRUP DURDURUCU KAPAĞI | COVER | | (L) | ♦ |
| 14 | K21.06636 | 015 997 4048 | (020 997 8748) | 1 | GRUP DURDURUCU PİSTON ORİNGİ | O-RING | 5X3mm | | ♦ |
| 15 | K21.06396 | 947 260 0718 | (960 260 3318) | 1 | GRUP DURD.PİSTON TAMİR TAKIMI | REPAIR KIT | | | ♦ |
| 16 | K21.06302 | 960 260 1718 | | 1 | GRUP DURDURUCU KAPAK PİSTONU | PISTON | | (K) | ♦ |
| 17 | K21.06967 | 960 260 3418 | | 1 | GRUP DURDURUCU KAPAK PİSTONU | PISTON | | (L) | ♦ |
| 18 | K21.06431 | 960 262 0291 | (960 262 0191) | 1 | KAVRAMA HALKA SETİ | PARTS KIT | | | ♦ |
| | | | (960 262 0091) | | | | | | |
| | | | (947 260 4036) | | | | | | |
| 19 | K21.06730 | 970 994 3541 | (000472 100000) | 1 | GRUP DURDURUCU KİLİT SEKMANI | RETAINING RING | 3,00mm | | ♦ |
| 20 | K21.06533 | 028 997 2348 | (004 997 2248) | 1 | GRUP DURDURUCU KAPAK ORİNGİ | O-RING | 100X3mm | | ♦ |
| 21 | K21.04192 | 406 337 0252 | | 1 | GRUP MİLİ ÖN BİLYA RAYNELİ | THRUST WASHER | 0,10mm | | ♦ |
| 21 | K21.04150 | 406 337 0352 | | 1 | GRUP MİLİ ÖN BİLYA RAYNELİ | THRUST WASHER | 0,20mm | | ♦ |
| 21 | K21.94150 | | | 1 | GRUP MİLİ ÖN BİLYA RAYNELİ | THRUST WASHER | 0,25mm | | ♦ |
| 21 | K21.04338 | 406 337 0452 | | 1 | GRUP MİLİ ÖN BİLYA RAYNELİ | THRUST WASHER | 0,30mm | | ♦ |
| 21 | K21.04196 | 389 263 5352 | (389 263 3252) | 1 | GRUP MİLİ ÖN BİLYA RAYNELİ | THRUST WASHER | 0,40mm | | ♦ |
| 21 | K21.04194 | 389 263 3352 | | 1 | GRUP MİLİ ÖN BİLYA RAYNELİ | THRUST WASHER | 0,45mm | | ♦ |

NOTES :
Parts encoded alphabetic and numaric are used together.

NOTLAR :
Alfabetik ve rakam ile kodlanan parçalar birlikte kullanılır.





Original parts names, oem numbers, symbols and descriptions used in this catalogue are for reference purposes only.

# GEARBOX G 140-8 / 9,30 - 0,79

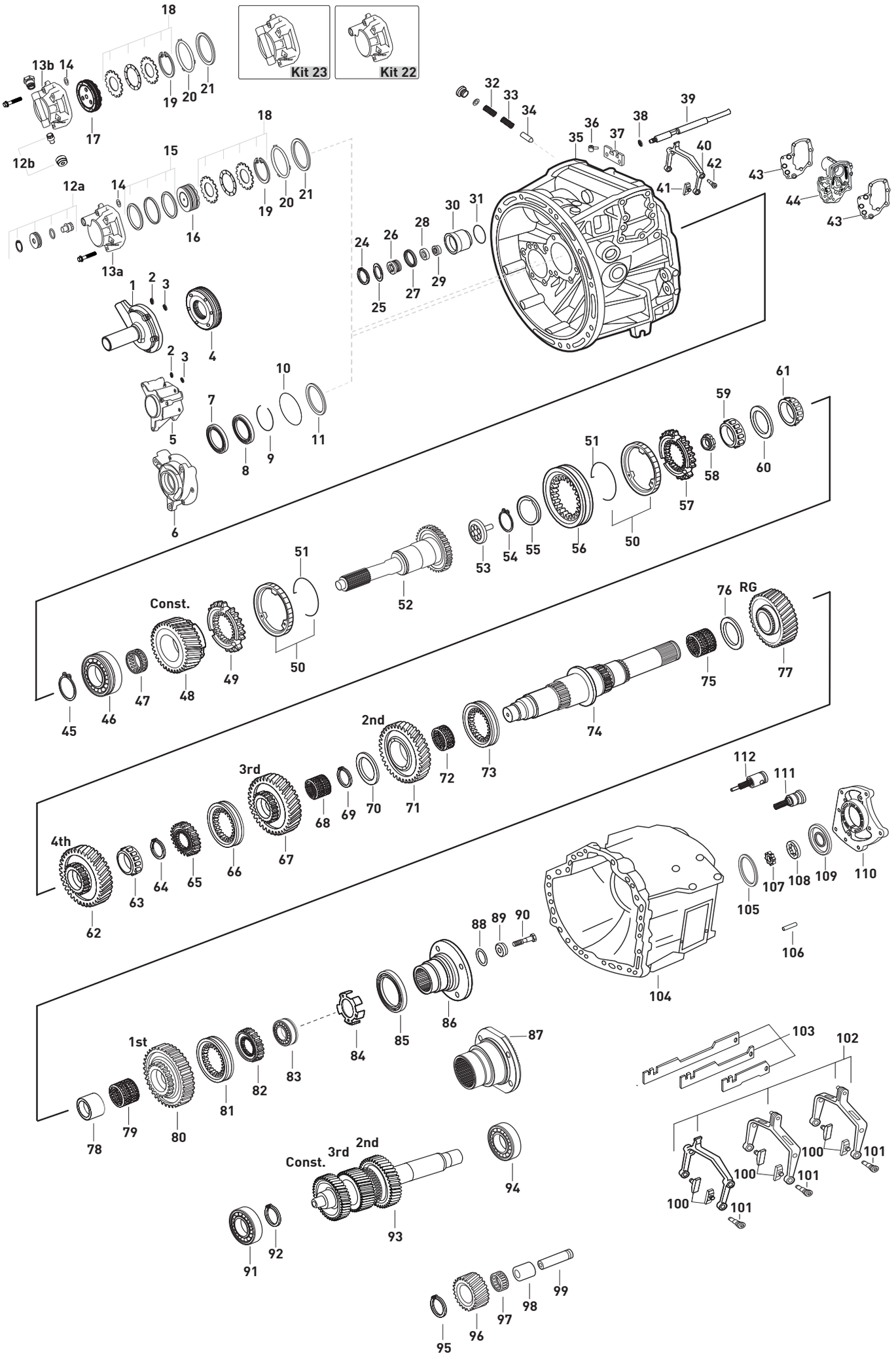




Original parts names, oem numbers, symbols and descriptions used in this catalogue are for reference purposes only.

| Fig. | Kacmaz No | Oem No | Oem Old No | Pcs. | Ürün Tanımı | Description | Sizes | Not | G140-8 |
|---|---|---|---|---|---|---|---|---|---|
| 21 | K21.06719 | 389 263 5652 | | 1 | GRUP MİLİ ÖN BİLYA RAYNELİ | THRUST WASHER | 0,49mm | | ♦ |
| 21 | K21.04197 | 389 263 5852 | (389 263 3552) | 1 | GRUP MİLİ ÖN BİLYA RAYNELİ | THRUST WASHER | 0,55mm | | ♦ |
| 21 | K21.04340 | 389 263 6052 | | 1 | GRUP MİLİ ÖN BİLYA RAYNELİ | THRUST WASHER | 0,61mm | | ♦ |
| 21 | K21.04198 | 389 263 6352 | (389 263 3852) | 1 | GRUP MİLİ ÖN BİLYA RAYNELİ | THRUST WASHER | 0,70mm | | ♦ |
| 21 | K21.04154 | 389 263 3952 | | 1 | GRUP MİLİ ÖN BİLYA RAYNELİ | THRUST WASHER | 0,75mm | | ♦ |
| 21 | K21.04199 | 389 263 6852 | | 1 | GRUP MİLİ ÖN BİLYA RAYNELİ | THRUST WASHER | 0,85mm | | ♦ |
| 21 | K21.04200 | 389 263 7352 | | 1 | GRUP MİLİ ÖN BİLYA RAYNELİ | THRUST WASHER | 1,00mm | | ♦ |
| 21 | K21.04201 | 389 263 7852 | | 1 | GRUP MİLİ ÖN BİLYA RAYNELİ | THRUST WASHER | 1,15mm | | ♦ |
| 21 | K21.04202 | 389 263 8352 | | 1 | GRUP MİLİ ÖN BİLYA RAYNELİ | THRUST WASHER | 1,30mm | | ♦ |
| 22 | K21.06487 | | | 1 | GRUP DURDURUCU KAPAĞI KOMPLE | REPAIR KIT | | (K) | ♦ |
| 23 | K21.06948 | 960 260 5965 | (960 260 4865) | 1 | GRUP DURDURUCU KAPAĞI KOMPLE | REPAIR KIT | | (L) | ♦ |
| 24 | | 006 994 4241 | (000472 065001) | 1 | TAKVİYE PİSTON SEKMANI | RETAINING RING | 65X2,5mm | | ♦ |
| 25 | K21.04233 | 389 262 2555 | | 1 | TAKVİYE SİLİNDİR PULU | SPACER WASHER | 0,70mm | | ♦ |
| 25 | K21.04234 | 389 262 2655 | | 1 | TAKVİYE SİLİNDİR PULU | SPACER WASHER | 0,90mm | | ♦ |
| 25 | K21.04112 | 389 262 3254 | | 1 | TAKVİYE SİLİNDİR PULU | SPACER WASHER | 1,05mm | | ♦ |
| 25 | K21.04111 | 389 262 3354 | | 1 | TAKVİYE SİLİNDİR PULU | SPACER WASHER | 1,10mm | | ♦ |
| 25 | K21.04109 | 389 262 3554 | | 1 | TAKVİYE SİLİNDİR PULU | SPACER WASHER | 1,20mm | | ♦ |
| 25 | K21.04105 | 389 262 2052 | | 1 | TAKVİYE SİLİNDİR PULU | SPACER WASHER | 1,40mm | | ♦ |
| 25 | K21.04093 | 389 262 2355 | | 1 | TAKVİYE SİLİNDİR PULU | SPACER WASHER | 1,79mm | | ♦ |
| 25 | K21.04025 | 389 262 3252 | | 1 | TAKVİYE SİLİNDİR PULU | SPACER WASHER | 2,00mm | | ♦ |
| 25 | K21.04024 | 389 262 3352 | | 1 | TAKVİYE SİLİNDİR PULU | SPACER WASHER | 2,50mm | | ♦ |
| 26 | K21.06994 | 945 267 0218 | (387 267 0918) | 1 | TAKVİYE MİL PİSTONU | PISTON | | | ♦ |
| | | | (387 267 0618) | | | | | | |
| 27 | K21.03524 | 006 997 6447 | (020 997 6647) | 1 | TAKVİYE HAVA KEÇESİ | OIL SEAL | 41X48X11,5mm | | ♦ |
| | | | (012 997 3347) | | | | | | |
| 28 | K21.04178 | 387 267 0650 | (387 267 0250) | 1 | TAKVİYE SİLİNDİR BURCU | BUSHING | 34X22X8mm | | ♦ |
| 29 | K21.03523 | 000 267 0197 | (000 267 0397) | 1 | TAKVİYE HİLAL MİL KEÇESİ | OIL SEAL | 22X32X8mm | | ♦ |
| 30 | K21.06036 | 945 267 0819 | (945 267 0119) | 1 | TAKVİYE SİLİNDİR GÖVDESİ | CYLINDER | | | ♦ |
| | | | (945 267 0719) | | | | | | |
| | | | (945 267 0019) | | | | | | |
| 31 | K21.06534 | 022 997 4248 | | 1 | TAKVİYE SİLİNDİR ORİNGİ | O-RING | 55,6X3mm | | ♦ |
| 32 | K21.06015 | 387 993 4501 | | 1 | ŞANZ.TAKVİYE KİLİT FİŞEK YAYI | SPRING | 6,2X63mm | | ♦ |
| 33 | K21.03500 | 387 993 4401 | (387 993 2501) | 1 | KİLİT YAYI | SPRING | 9,8X63,3mm | | ♦ |
| 34 | K21.03492 | 389 267 1174 | (387 267 0074) | 1 | KİLİT FİŞEĞİ | PIN | | | ♦ |
| 35 | | 940 260 2111 | (940 260 1811) | 1 | ŞANZIMAN ÖN GÖVDE | HOUSING | | | ♦ |
| 36 | K21.06529 | 437 261 0082 | (945 261 0082) | 1 | ŞANZIMAN HAVALANDIRMA | CAP | | | ♦ |
| 37 | | 930 265 0345 | | 1 | VİTES HİLAL ÇITA KİLİTLEMESİ | BRACKET | | | ♦ |
| 38 | K21.04160 | 387 263 2652 | | 1 | TAKVİYE HİLAL MİL PULU | SPACER WASHER | 0,20mm | | ♦ |
| 38 | K21.04161 | 387 263 2752 | | 1 | TAKVİYE HİLAL MİL PULU | SPACER WASHER | 0,40mm | | ♦ |
| 38 | | 387 263 2852 | | 1 | TAKVİYE HİLAL MİL PULU | SPACER WASHER | 0,60mm | | ♦ |
| 38 | | 387 263 3052 | | 1 | TAKVİYE HİLAL MİL PULU | SPACER WASHER | 1,00mm | | ♦ |
| 39 | | 960 267 1817 | | 1 | TAKVİYE HİLAL MİLİ | G.SHIFT RAIL | | | ♦ |
| 40 | | 656 265 0801 | | 1 | TAKVİYE HİLALİ | GEAR SHIFT FORK | | | ♦ |
| 41 | K21.03431 | 960 265 0049 | (947 265 0349) | 2 | TAKVİYE HİLAL PABUCU | SLIDING PAD | | | ♦ |
| | | | (389 265 2749) | | | | | | |
| 42 | K21.04307 | 960 265 0774 | (945 265 1274) | 2 | HİLAL CİVATASI | PIN | | | ♦ |
| | | | (945 265 2974) | | | | | | |
| | | | (945 265 2774) | | | | | | |
| 43 | | 960 261 0680 | | 2 | KULE CONTASI | GASKET | | | ♦ |
| 44 | | 960 260 1213 | | 1 | KULE KAPAĞI | COVER | | | ♦ |
| 45 | K21.04361 | 976 262 0173 | | 1 | PRİZDİREK ÖN BİLYA SEKMANI | RETAINING RING | 2,00mm | | ♦ |
| 45 | K21.06956 | 976 262 0373 | | 1 | PRİZDİREK ÖN BİLYA SEKMANI | RETAINING RING | 2,10mm | | ♦ |
| 45 | K21.06957 | 976 262 0573 | | 1 | PRİZDİREK ÖN BİLYA SEKMANI | RETAINING RING | 2,20mm | | ♦ |

NOTES :
Parts encoded alphabetic and numaric are used together.

NOTLAR :
Alfabetik ve rakam ile kodlanan parçalar birlikte kullanılır.





Original parts names, oem numbers, symbols and descriptions used in this catalogue are for reference purposes only.

# GEARBOX G 140-8 / 9,30 - 0,79

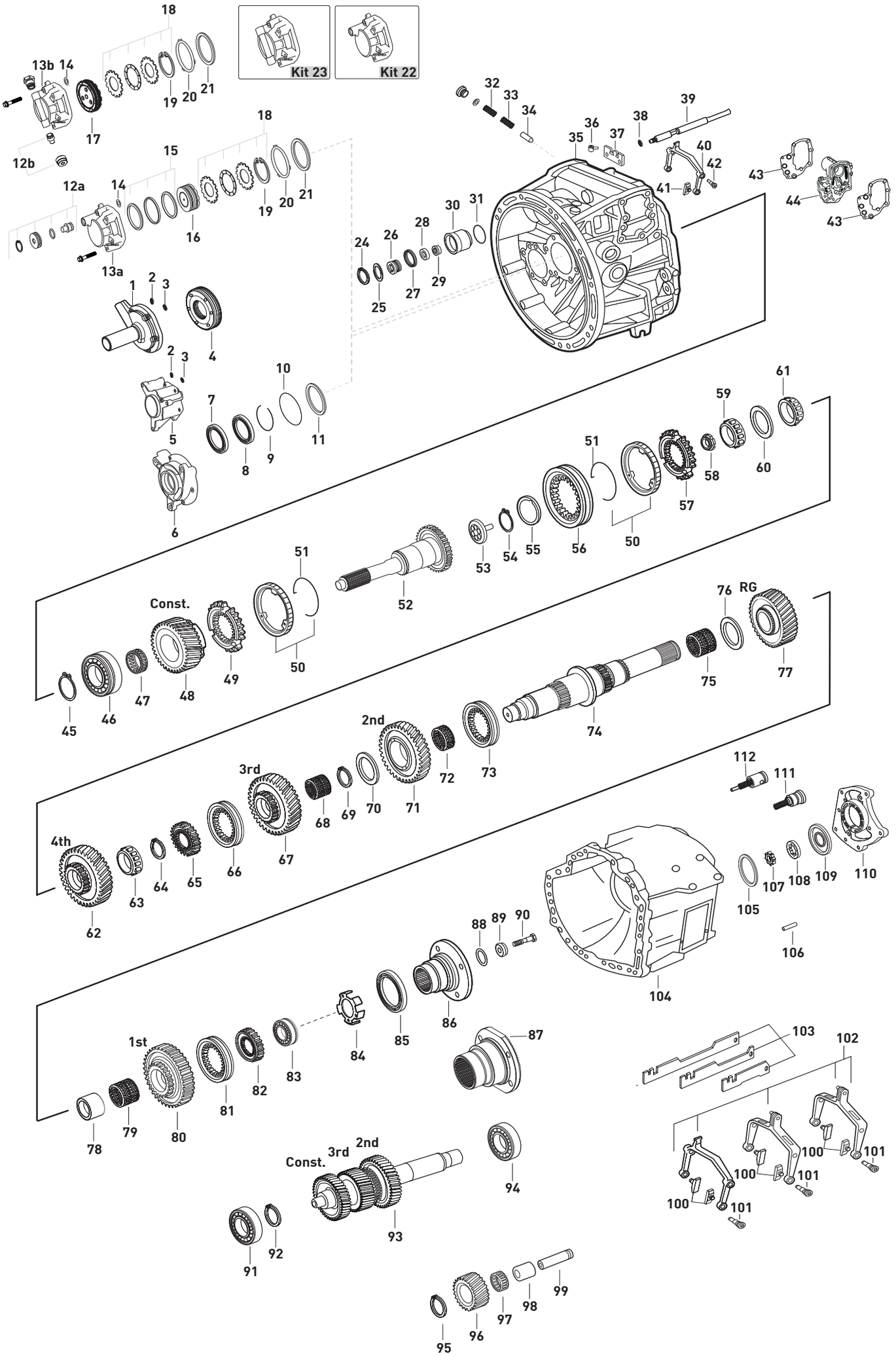




Original parts names, oem numbers, symbols and descriptions used in this catalogue are for reference purposes only.

| Fig. | Kacmaz No | Oem No | Oem Old No | Pcs. | Ürün Tanımı | Description | Sizes | Not | G140-8 |
|---|---|---|---|---|---|---|---|---|---|
| 45 | K21.06958 | 976 262 0773 | | 1 | PRİZDİREK ÖN BİLYA SEKMANI | RETAINING RING | 2,30mm | | ♦ |
| 45 | K21.06959 | 976 262 3473 | | 1 | PRİZDİREK ÖN BİLYA SEKMANI | RETAINING RING | 2,40mm | | ♦ |
| 45 | K21.06960 | 976 262 3673 | | 1 | PRİZDİREK ÖN BİLYA SEKMANI | RETAINING RING | 2,50mm | | ♦ |
| 45 | | 976 994 4141 | | 1 | PRİZDİREK ÖN BİLYA SEKMANI | RETAINING RING | 3,15mm | (1) | ♦ |
| 45 | | 976 994 4241 | | 1 | PRİZDİREK ÖN BİLYA SEKMANI | RETAINING RING | 3,20mm | (1) | ♦ |
| 45 | | 976 994 4341 | | 1 | PRİZDİREK ÖN BİLYA SEKMANI | RETAINING RING | 3,25mm | (1) | ♦ |
| 45 | | 976 994 4441 | | 1 | PRİZDİREK ÖN BİLYA SEKMANI | RETAINING RING | 3,30mm | (1) | ♦ |
| 45 | | 976 994 4541 | | 1 | PRİZDİREK ÖN BİLYA SEKMANI | RETAINING RING | 3,35mm | (1) | ♦ |
| 45 | | 976 994 4641 | | 1 | PRİZDİREK ÖN BİLYA SEKMANI | RETAINING RING | 3,40mm | (1) | ♦ |
| 45 | | 976 994 4741 | | 1 | PRİZDİREK ÖN BİLYA SEKMANI | RETAINING RING | 3,45mm | (1) | ♦ |
| 45 | | 976 994 4841 | | 1 | PRİZDİREK ÖN BİLYA SEKMANI | RETAINING RING | 3,50mm | (1) | ♦ |
| 46 | | 017 981 9705 | (017 981 9905) | 1 | PRİZDİREK ÖN BİLYA | ROLLER BEARING | | | ♦ |
| 47 | | 023 981 0810 | (023 981 0610) | 1 | TAKVİYE MASURA BİLYA | NEEDLE CAGE | | | ♦ |
| 48 | | 960 262 0110 | (960 262 0210) | 1 | TAKVİYE DİŞLİSİ 23 DİŞ | CONSTANT GEAR 23 T. | | | ♦ |
| 49 | | 960 262 1034 | | 1 | TAKVİYE SENKROMENÇ | ENGAGING RING | | | ♦ |
| 50 | K21.06299 | 947 260 3545 | (947 260 5145) | 2 | TAKVİYE FRENLEME (C) | SYNCHRONIZING CONE / C | | | ♦ |
| | | | (947 260 2945) | | | | | | |
| | | | (947 260 0745) | | | | | | |
| 51 | K21.03055 | 387 262 0893 | (387 262 0793) | 2 | FRENLEME TELİ | SPRING | | | ♦ |
| 52 | | 960 262 6002 | (948 262 1002) | 1 | PRİZDİREK | INPUT SHAFT | | (1) | ♦ |
| 52 | | 960 262 4402 | | 1 | PRİZDİREK | INPUT SHAFT | | | ♦ |
| 53 | K21.04001 | 976 269 0034 | (960 269 0434) | 1 | PRİZDİREK YAĞ PİPETİ | OIL COLLECTOR | | | ♦ |
| 54 | K21.04002 | 000 994 9841 | | 1 | PRİZDİREK YAĞ PİPET SEKMANI | RETAINING RING | | | ♦ |
| 55 | | 001 262 2562 | | 1 | PRİZDİREK ARKA KEÇE | OIL SEAL | | | ♦ |
| 56 | K21.03151 | 945 262 6523 | (930 262 0523) | 1 | TAKVİYE HALKA | ENGAGING SLEEVE | | | ♦ |
| 57 | | 960 262 0934 | | 1 | TAKVİYE SENKROMENÇ | ENGAGING RING | | | ♦ |
| 58 | | 000 990 5553 | | 1 | KAMALI MİL SOMUNU | NUT | | | ♦ |
| 59 | | 019 981 5805 | | 1 | KAMALI MİL UÇ BİLYA | ROLLER BEARING | 35X39,25mm | | ♦ |
| 60 | | 960 990 4582 | | 1 | KAMALI MİL AYAR PULU | THRUST WASHER | 2,00mm | | ♦ |
| 60 | | 960 990 4482 | | 1 | KAMALI MİL AYAR PULU | THRUST WASHER | 1,95mm | | ♦ |
| 60 | | 960 990 4382 | | 1 | KAMALI MİL AYAR PULU | THRUST WASHER | 1,90mm | | ♦ |
| 60 | | 960 990 4282 | | 1 | KAMALI MİL AYAR PULU | THRUST WASHER | 1,85mm | | ♦ |
| 60 | | 960 990 4182 | | 1 | KAMALI MİL AYAR PULU | THRUST WASHER | 1,80mm | | ♦ |
| 60 | | 960 990 4082 | | 1 | KAMALI MİL AYAR PULU | THRUST WASHER | 1,75mm | | ♦ |
| 60 | | 960 990 3982 | | 1 | KAMALI MİL AYAR PULU | THRUST WASHER | 1,70mm | | ♦ |
| 60 | | 960 990 3882 | | 1 | KAMALI MİL AYAR PULU | THRUST WASHER | 1,65mm | | ♦ |
| 60 | | 960 990 3782 | | 1 | KAMALI MİL AYAR PULU | THRUST WASHER | 1,60mm | | ♦ |
| 61 | | 019 981 5905 | (019 981 9305) | 1 | 4.VİTES DİŞLİSİ ÖN BİLYA | ROLLER BEARING | 46X32mm | | ♦ |
| 62 | | 960 262 0510 | (960 262 0610) | 1 | 4.VİTES DİŞLİSİ | GEAR 4th | | | ♦ |
| 63 | K21.03636 | 017 981 8305 | | 1 | 3.VİTES DİŞLİ ARKA BİLYA | ROLLER BEARING | 52X24mm | | ♦ |
| 64 | K21.06930 | 387 262 7873 | | 1 | 3./4.VİTES YILDIZ DİŞLİ SEKMANI | RETAINING RING | 2,80mm | | ♦ |
| 64 | K21.07020 | 387 262 7773 | | 1 | 3./4.VİTES YILDIZ DİŞLİ SEKMANI | RETAINING RING | 2,75mm | | ♦ |
| 64 | K21.06669 | 387 262 7673 | | 1 | 3./4.VİTES YILDIZ DİŞLİ SEKMANI | RETAINING RING | 2,70mm | | ♦ |
| 64 | K21.06929 | 387 262 0973 | | 1 | 3./4.VİTES YILDIZ DİŞLİ SEKMANI | RETAINING RING | 2,65mm | | ♦ |
| 64 | K21.04337 | 387 262 0873 | | 1 | 3./4.VİTES YILDIZ DİŞLİ SEKMANI | RETAINING RING | 2,60mm | | ♦ |
| 64 | K21.07019 | 387 262 0773 | | 1 | 3./4.VİTES YILDIZ DİŞLİ SEKMANI | RETAINING RING | 2,55mm | | ♦ |
| 64 | K21.04352 | 387 262 0673 | | 1 | 3./4.VİTES YILDIZ DİŞLİ SEKMANI | RETAINING RING | 2,50mm | | ♦ |
| 64 | K21.07018 | 387 262 0573 | | 1 | 3./4.VİTES YILDIZ DİŞLİ SEKMANI | RETAINING RING | 2,45mm | | ♦ |
| 64 | K21.04336 | 387 262 0473 | | 1 | 3./4.VİTES YILDIZ DİŞLİ SEKMANI | RETAINING RING | 2,40mm | | ♦ |
| 65 | | 960 262 1935 | (960 262 1135) | 1 | 3./4.VİTES YILDIZ DİŞLİ | SYNCHRONIZER HUB | | | ♦ |
| 66 | K21.03282 | 947 262 2223 | (947 262 1423) | 1 | 3./4.VİTES HALKASI | ENGAGING SLEEVE | | | ♦ |
| | | | (947 262 1123) | | | | | | |
| | | | (947 262 0423) | | | | | | |

NOTES :
Parts encoded alphabetic and numaric are used together.

NOTLAR :
Alfabetik ve rakam ile kodlanan parçalar birlikte kullanılır.





Original parts names, oem numbers, symbols and descriptions used in this catalogue are for reference purposes only.

# GEARBOX G 140-8 / 9,30 - 0,79

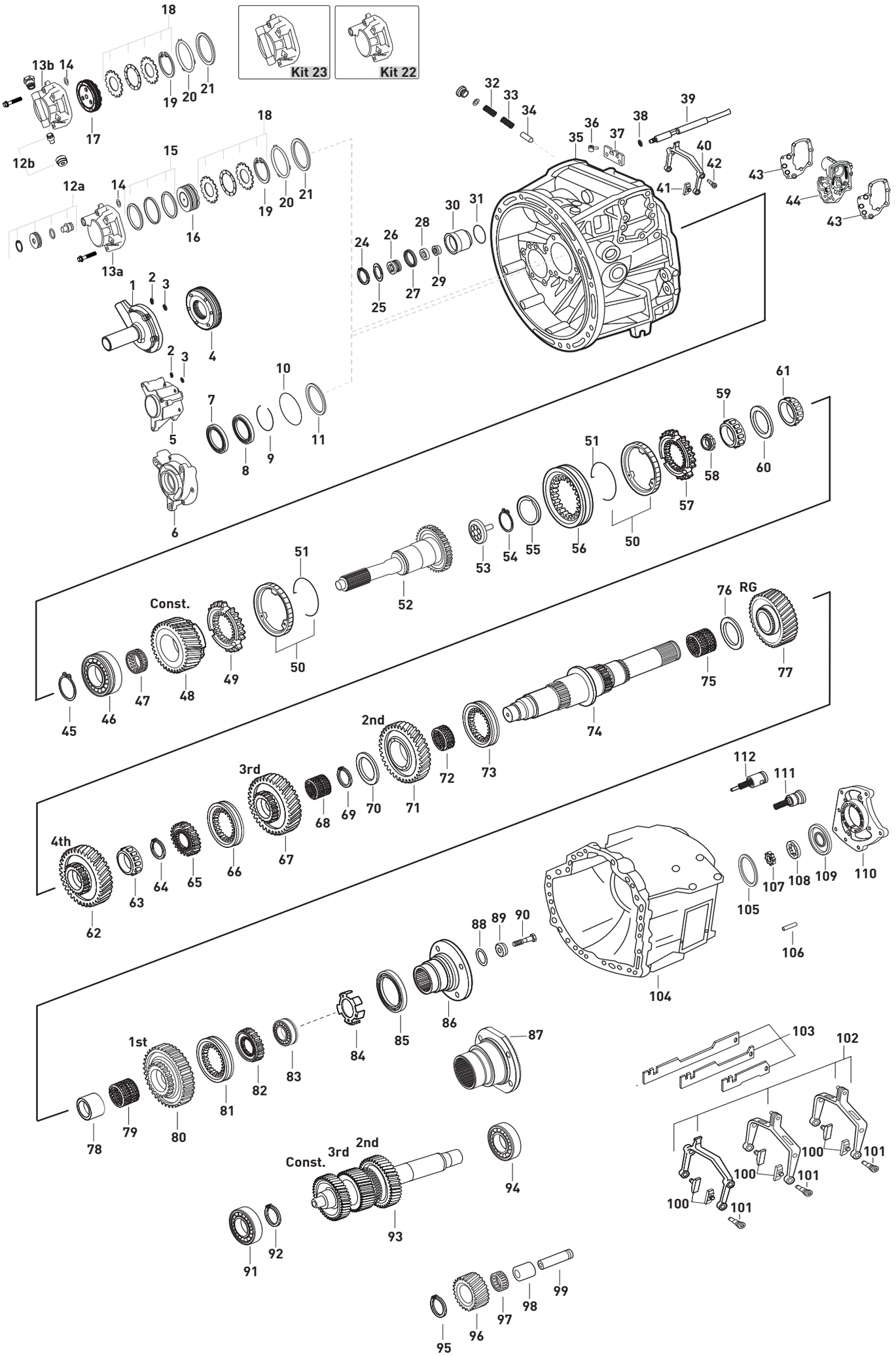




Original parts names, oem numbers, symbols and descriptions used in this catalogue are for reference purposes only.

| Fig. | Kacmaz No | Oem No | Oem Old No | Pcs. | Ürün Tanımı | Description | Sizes | Not | G140-8 |
|---|---|---|---|---|---|---|---|---|---|
| 67 | | 960 262 0113 | (960 262 0213) | 1 | 3.VİTES DİŞLİSİ | GEAR 3rd | | | ♦ |
| | | | (960 262 0013) | | | | | | |
| 68 | K21.03823 | 019 981 9210 | (023 981 1210) | 1 | 3.VİTES MASURA BİLYA | NEEDLE CAGE | 78X86X48mm | | ♦ |
| | | | (023 981 5110) | | | | | | |
| 69 | | 001 994 3340 | | 1 | 3.VİT.MASURA BİLYA SEKMANI | RETAINING RING | 2,70mm | | ♦ |
| 69 | | 001 994 3240 | | 1 | 3.VİT.MASURA BİLYA SEKMANI | RETAINING RING | 2,65mm | | ♦ |
| 69 | | 001 994 3140 | | 1 | 3.VİT.MASURA BİLYA SEKMANI | RETAINING RING | 2,60mm | | ♦ |
| 69 | | 001 994 3040 | | 1 | 3.VİT.MASURA BİLYA SEKMANI | RETAINING RING | 2,55mm | | ♦ |
| 69 | | 001 994 2940 | | 1 | 3.VİT.MASURA BİLYA SEKMANI | RETAINING RING | 2,50mm | | ♦ |
| 69 | | 001 994 2840 | | 1 | 3.VİT.MASURA BİLYA SEKMANI | RETAINING RING | 2,45mm | | ♦ |
| 69 | | 001 994 2740 | | 1 | 3.VİT.MASURA BİLYA SEKMANI | RETAINING RING | 2,40mm | | ♦ |
| 70 | K21.04284 | 389 262 2855 | | 1 | 2./3.VİTES MASURA BİLYA PULU | THRUST WASHER | 5,50mm | | ♦ |
| 71 | | 960 262 0112 | (960 262 0212) | 1 | 2.VİTES DİŞLİSİ | GEAR 2nd | | | ♦ |
| 72 | K21.03810 | 018 981 6610 | (010 981 5310) | 1 | 2.VİTES MASURA BİLYA | NEEDLE CAGE | 85X93X53mm | | ♦ |
| 73 | K21.03582 | 960 262 1523 | (930 262 0123) | 1 | 2./GERİ VİTES HALKASI | ENGAGING SLEEVE | | | ♦ |
| | | | (930 262 0723) | | | | | | |
| | | | (945 262 5223) | | | | | | |
| 74 | | 960 262 5305 | (960 262 2805) | 1 | KAMALI MİL | MAIN SHAFT | | | ♦ |
| | | | (960 262 2905) | | | | | | |
| | | | (960 262 5405) | | | | | | |
| 75 | K21.03810 | 018 981 6610 | (010 981 5310) | 1 | GERİ VİTES MASURA BİLYA | NEEDLE CAGE | 85X93X53mm | | ♦ |
| 76 | K21.04284 | 389 262 2855 | | 1 | GERİ VİTES MASURA BİLYA PULU | THRUST WASHER | 5,50mm | | ♦ |
| 77 | | 960 262 0633 | (960 262 0733) | 1 | GERİ VİTES DİŞLİSİ | REVERSE GEAR | | | ♦ |
| 78 | | 656 262 0050 | | 1 | 1. VİTES MASURA BİLYA ÇANAĞI | BEARING RACE | | | ♦ |
| 79 | K21.03859 | 023 981 5210 | (022 981 5810) | 1 | 1.VİTES MASURA BİLYA | NEEDLE CAGE | 85X93X60mm | | ♦ |
| 80 | | 960 262 0111 | (960 262 0211) | 1 | 1.VİTES DİŞLİSİ | GEAR 1st | | | ♦ |
| 81 | K21.03582 | 960 262 1523 | (930 262 0123) | 1 | 1. VİTES HALKASI | ENGAGING SLEEVE | | | ♦ |
| | | | (930 262 0723) | | | | | | |
| | | | (945 262 5223) | | | | | | |
| 82 | | 656 262 0235 | | 1 | 1. VİTES YILDIZ DİŞLİ | SYNCHRONIZER HUB | | | ♦ |
| 83 | | 017 981 8805 | (017 981 9005) | 1 | KAMALI MİL ARKA BİLYA | ROLLER BEARING | | | ♦ |
| 84 | | 960 262 2228 | | 1 | ŞANZIMAN KM DEVİR SACI | PULSE STAR | | | ♦ |
| 85 | K21.03519 | 023 997 8847 | (023 997 8547) | 1 | ŞANZIMAN ARKA KEÇE | OIL SEAL | 80X100X15,5mm | | ♦ |
| | | | (020 997 6447) | | | | | | |
| 86 | | 960 262 0245 | | 1 | ŞANZIMAN FLANŞI | COMPANION FLANGE | | | ♦ |
| 87 | | 960 262 0345 | | 1 | ŞANZIMAN FLANŞI | COMPANION FLANGE | | | ♦ |
| 88 | K21.06990 | 027 997 3048 | (023 997 5548) | 1 | ŞANZIMAN FLANŞ ORİNGİ | O-RING | 56,52X5,33mm | | ♦ |
| | | | (023 997 6048) | | | | | | |
| 89 | K21.06977 | 389 262 0362 | (945 262 0062) | 1 | ŞANZIMAN FLANŞI ALIN PULU | THRUST WASHER | 95X24mm | | ♦ |
| 90 | K21.06280 | 000000 006750 | (000000 005728) | 1 | ŞANZ.FLANŞI ALIN VİDASI | SCREW | M20X1,5X80mm | | ♦ |
| 91 | K21.03606 | 015 981 9005 | (014 981 1405) | 1 | GRUP MİLİ ÖN BİLYA | ROLLER BEARING | 50,8X100X35mm | | ♦ |
| | | | (012 981 7405) | | | | | | |
| | | | (012 981 5105) | | | | | | |
| 92 | K21.06426 | 900055 060300 | (000 264 5351) | 1 | GRUP MİLİ ÖN BİLYA SEKMANI | RETAINING RING | 3,00mm | | ♦ |
| 93 | | 960 260 1224 | | 1 | GRUP MİLİ | COUNTER SHAFT | | | ♦ |
| 94 | | 018 981 8605 | (018 981 8505) | 1 | GRUP MİLİ ARKA BİLYA | ROLLER BEARING | | | ♦ |
| 95 | | 000472 030000 | | 1 | K.GERİ VİTES DİŞLİ SEKMANI | RETAINING RING | | | ♦ |
| 96 | | 963 263 0131 | (960 263 0231) | 1 | K.GERİ VİTES DİŞLİSİ | REV.IDLER GEAR | | | ♦ |
| 97 | | 017 981 7510 | (019 981 4610) | 1 | K.GERİ VİTES DİŞLİ MASURA BİLYA | NEEDLE CAGE | 48X60X50mm | | ♦ |
| 98 | | 976 263 0050 | | 1 | K.GERİ VİT. MASURA BİLYA ÇANAĞI | BUSHING | | | ♦ |
| 99 | K21.06037 | 976 263 0030 | (976 263 1230) | 1 | KÜÇÜK GERİ VİTES PİMİ | PIN | | | ♦ |
| 100 | K21.03565 | 947 265 0449 | | 6 | 1./2./3./4./GERİ VİTES HİLAL PABUCU | SLIDING PAD | | | ♦ |
| 101 | K21.04308 | 960 265 0874 | (945 265 1374) | 6 | HİLAL CİVATASI | PIN | | | ♦ |

NOTES :
Parts encoded alphabetic and numaric are used together.

NOTLAR :
Alfabetik ve rakam ile kodlanan parçalar birlikte kullanılır.





Original parts names, oem numbers, symbols and descriptions used in this catalogue are for reference purposes only.

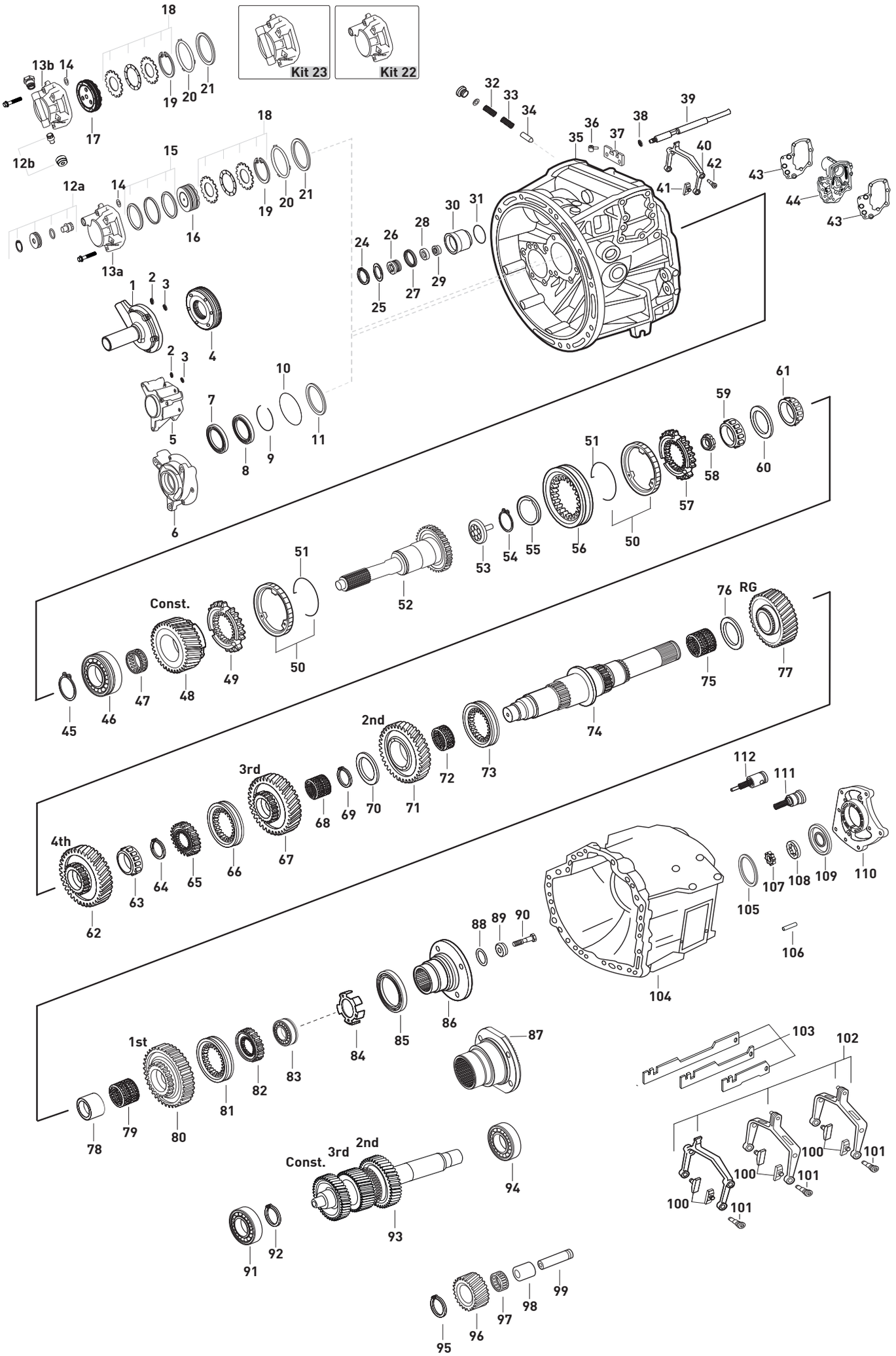






Original parts names, oem numbers, symbols and descriptions used in this catalogue are for reference purposes only.

| Fig. | Kacmaz No | Oem No | Oem Old No | Pcs. | Ürün Tanımı | Description | Sizes | Not | G140 - 8 |
|---|---|---|---|---|---|---|---|---|---|
| 102 | | 960 260 3930 | | Kit | VİTES HİLAL TAKIMI | REPAIR KIT | | | ♦ |
| 103 | | 960 260 0431 | | Kit | VİTES HİLAL ÇITA TAKIMI | REPAIR KIT | | | ♦ |
| 104 | | 940 261 1403 | | 1 | ŞANZIMAN ORTA GÖVDE | HOUSING | | | ♦ |
| 105 | K21.04289 | 389 263 1352 | | 1 | YAĞ POMPA AYAR RAYNELİ | THRUST WASHER | 0,10mm | | ♦ |
| 105 | K21.04290 | 389 263 1452 | | 1 | YAĞ POMPA AYAR RAYNELİ | THRUST WASHER | 0,15mm | | ♦ |
| 105 | K21.04291 | 389 263 1552 | | 1 | YAĞ POMPA AYAR RAYNELİ | THRUST WASHER | 0,25mm | | ♦ |
| 105 | K21.04292 | 389 263 1652 | | 1 | YAĞ POMPA AYAR RAYNELİ | THRUST WASHER | 0,30mm | | ♦ |
| 105 | K21.04293 | 389 263 1752 | | 1 | YAĞ POMPA AYAR RAYNELİ | THRUST WASHER | 0,50mm | | ♦ |
| 106 | | 389 261 0674 | | 1 | YAĞ POMPA KAPAK PİMİ | PIN | | | ♦ |
| 107 | K21.03459 | 389 269 1606 | (389 269 1706) | 1 | YAĞ POMPA İÇ ROTOR | OIL PUMP GEAR | | | ♦ |
| 108 | K21.03414 | 389 269 0706 | (389 269 1206) | 1 | YAĞ POMPA DIŞ ROTOR | ROTOR | | | ♦ |
| 109 | | 389 269 4401 | (389 269 4201) | 1 | YAĞ POMPA KAPAĞI | OIL PUMP COVER | | | ♦ |
| 110 | | 656 261 0333 | | 1 | YAĞ POMPA GÖVDESİ | OIL PUMP COVER | | | ♦ |
| 111 | K21.06988 | 960 260 2257 | | Kit | YAĞ BASINÇ VALFİ KOMPLE | VALVE KIT | | | ♦ |
| 112 | K21.06989 | 960 260 2157 | (960 260 3757) | Kit | YAĞ BASINÇ VALFİ KOMPLE | VALVE KIT | | | ♦ |

NOTES :
Parts encoded alphabetic and numaric are used together.

NOTLAR :
Alfabetik ve rakam ile kodlanan parçalar birlikte kullanılır.





Original parts names, oem numbers, symbols and descriptions used in this catalogue are for reference purposes only.

# GEARBOX GO 240-8 / 6,57 - 0,63

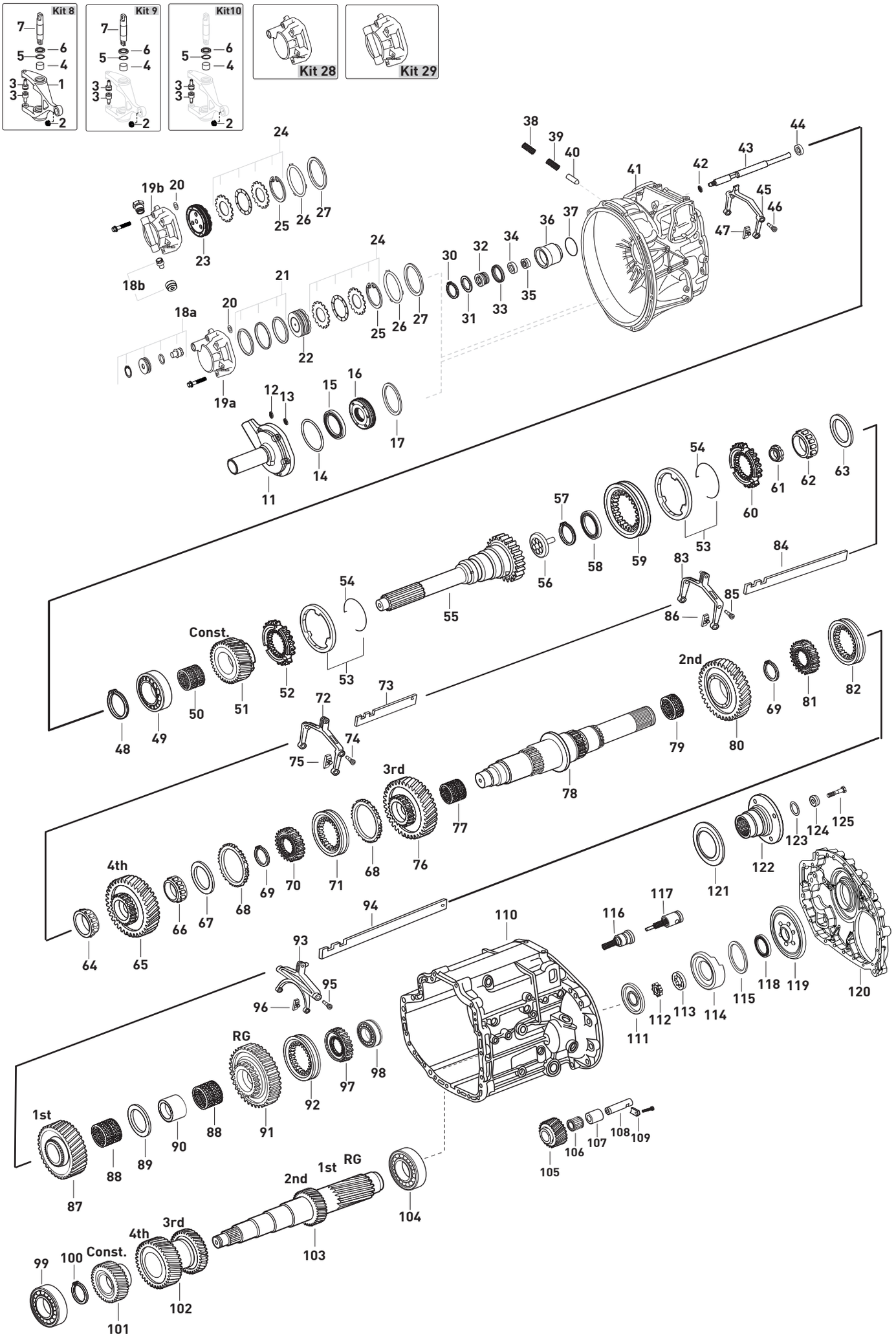




Original parts names, oem numbers, symbols and descriptions used in this catalogue are for reference purposes only.

| Fig. | Kacmaz No | Oem No | Oem Old No | Pcs. | Ürün Tanımı | Description | Sizes | Not | 714180 | 714183 |
|---|---|---|---|---|---|---|---|---|---|---|
| 1 | K21.07042 | 656 250 0613 | (656 250 0813) | kit | DEBRİYAJ ÇATALI BOŞ | RELEASE FORK EMPTY | | | ♦ | ♦ |
| 2 | K21.07040 | 000 254 0335 | | 1 | DEBRİYAJ ÇATAL PLASTİK TAPASI | PLASTIC BUSHING | | | ♦ | ♦ |
| 3 | K21.07038 | 000 254 0017 | | 2 | DEBRİYAJ ÇATAL BURÇ VE PİMİ | CAM ROLLER | | | ♦ | ♦ |
| 4 | | 002 992 9301 | | 2 | DEBRİYAJ ÇATAL MİL BURCU | BUSHING | | | ♦ | ♦ |
| 5 | | 912009 037200 | | 2 | DEBRİYAJ ÇATAL MİL SEKMANI | RETAINING RING | | | ♦ | ♦ |
| 6 | | 025 997 2347 | (025 997 2247) | 2 | DEBRİYAJ ÇATAL MİL KEÇESİ | OIL SEAL | | | ♦ | ♦ |
| 7 | | 656 254 0506 | (389 254 0006) | 1 | DEBRİYAJ ÇATAL MİLİ | SHAFT | | | ♦ | ♦ |
| 8 | K21.07041 | | | kit | DEBRİYAJ ÇATALI KOMPLE | RELEASE FORK COMPLETE | | | ♦ | ♦ |
| 9 | K21.07043 | | | kit | DEBRİYAJ ÇATALI TAMİR TAKIMI | RELEASE FORK REPAIR KIT | | | ♦ | ♦ |
| 10 | K21.07044 | | | kit | DEBRİYAJ ÇATALI TAMİR TK.MİLSİZ | RELEASE FORK REPAIR KIT | | W/OUT SHAFT | ♦ | ♦ |
| 11 | K21.06082 | 656 261 0018 | | 1 | PRİZDİREK KEÇE KAPAĞI | COVER | | | ♦ | ♦ |
| 12 | K21.06637 | 019 997 8348 | (020 997 7948) | 1 | PRİZDİREK KEÇE KAPAK ORİNGİ | O-RING | 14X4mm | | ♦ | ♦ |
| 13 | K21.06636 | 015 997 4048 | (020 997 8748) | 1 | PRİZDİREK KEÇE KAPAK ORİNGİ | O-RING | 5X3mm | | ♦ | ♦ |
| 14 | K21.06635 | 020 997 7848 | | 1 | PRİZDİREK KEÇE KAPAK ORİNGİ | O-RING | 138X3mm | | ♦ | ♦ |
| 15 | K21.03509 | 019 997 0547 | (023 997 7847) | 1 | PRİZDİREK KEÇESİ | OIL SEAL | 56X72X8mm | | ♦ | ♦ |
| | | | (019 997 0647) | | | | | | | |
| | | | (022 997 8547) | | | | | | | |
| 16 | K21.06038 | 389 261 0665 | (389 261 0765) | 1 | YAĞ TUTUCU DİSK | OIL BAFFLE | 75X16mm | | ♦ | ♦ |
| | | | (389 261 0865) | | | | | | | |
| 17 | K21.04162 | 389 262 4152 | (389 262 0955) | 1 | PRİZDİREK AYAR RAYNELİ | THRUST WASHER | 0,10mm | | ♦ | ♦ |
| 17 | K21.04243 | 389 262 0855 | | 1 | PRİZDİREK AYAR RAYNELİ | THRUST WASHER | 0,15mm | | ♦ | ♦ |
| 17 | K21.04151 | 389 262 0755 | | 1 | PRİZDİREK AYAR RAYNELİ | THRUST WASHER | 0,20mm | | ♦ | ♦ |
| 17 | K21.06715 | 389 262 3055 | | 1 | PRİZDİREK AYAR RAYNELİ | THRUST WASHER | 0,25mm | | ♦ | ♦ |
| 17 | K21.04221 | 389 262 3255 | | 1 | PRİZDİREK AYAR RAYNELİ | THRUST WASHER | 0,31mm | | ♦ | ♦ |
| 17 | K21.04163 | 389 262 3555 | (389 262 0655) | 1 | PRİZDİREK AYAR RAYNELİ | THRUST WASHER | 0,40mm | | ♦ | ♦ |
| | | | (389 262 4452) | | | | | | | |
| 17 | K21.04164 | 389 262 3755 | (389 262 1954) | 1 | PRİZDİREK AYAR RAYNELİ | THRUST WASHER | 0,46mm | | ♦ | ♦ |
| 17 | K21.04246 | 389 262 3855 | | 1 | PRİZDİREK AYAR RAYNELİ | THRUST WASHER | 0,49mm | | ♦ | ♦ |
| 17 | K21.04250 | 389 262 4055 | (389 262 0155) | 1 | PRİZDİREK AYAR RAYNELİ | THRUST WASHER | 0,55mm | | ♦ | ♦ |
| | | | (389 262 2154) | | | | | | | |
| 17 | K21.04167 | 389 262 4255 | (389 262 2254) | 1 | PRİZDİREK AYAR RAYNELİ | THRUST WASHER | 0,61mm | | ♦ | ♦ |
| 17 | K21.04168 | 389 262 4355 | (389 262 2354) | 1 | PRİZDİREK AYAR RAYNELİ | THRUST WASHER | 0,64mm | | ♦ | ♦ |
| 17 | K21.04169 | 389 262 4555 | (389 262 2454) | 1 | PRİZDİREK AYAR RAYNELİ | THRUST WASHER | 0,70mm | | ♦ | ♦ |
| 17 | K21.04170 | 389 262 4755 | (389 262 2554) | 1 | PRİZDİREK AYAR RAYNELİ | THRUST WASHER | 0,76mm | | ♦ | ♦ |
| 17 | K21.04281 | 389 262 4855 | (389 262 0555) | 1 | PRİZDİREK AYAR RAYNELİ | THRUST WASHER | 0,79mm | | ♦ | ♦ |
| 17 | K21.04282 | 389 262 5555 | | 1 | PRİZDİREK AYAR RAYNELİ | THRUST WASHER | 1,00mm | | ♦ | ♦ |
| 17 | K21.04171 | 389 262 9654 | (389 262 2654) | 1 | PRİZDİREK AYAR RAYNELİ | THRUST WASHER | 2,00mm | | ♦ | ♦ |
| 18a | K21.06498 | 930 260 0058 | | 1 | HAVALANDIRMA TAMİR TAKIMI | REPAIR KIT | | (K) | ♦ | ♦ |
| 18b | K21.07027 | 960 260 0058 | | 1 | HAVALANDIRMA TAMİR TAKIMI | REPAIR KIT | | (L) | ♦ | ♦ |
| 19a | K21.06301 | 960 261 1933 | | 1 | GRUP DURDURUCU KAPAĞI | COVER | | (K) | ♦ | ♦ |
| 19b | K21.06949 | 960 261 4133 | | 1 | GRUP DURDURUCU KAPAĞI | COVER | | (L) | ♦ | ♦ |
| 20 | K21.06636 | 015 997 4048 | (020 997 8748) | 1 | GRUP DURDURUCU PİSTON ORİNGİ | O-RING | 5X3mm | | ♦ | ♦ |
| 21 | K21.06396 | 947 260 0718 | (960 260 3318) | 1 | GRUP DURD.PİSTON TAMİR TAKIMI | REPAIR KIT | | | ♦ | ♦ |
| 22 | K21.06302 | 960 260 1718 | | 1 | GRUP DURDURUCU KAPAK PİSTONU | PISTON | | (K) | ♦ | ♦ |
| 23 | K21.06967 | 960 260 3418 | | 1 | GRUP DURDURUCU KAPAK PİSTONU | PISTON | | (L) | ♦ | ♦ |
| 24 | K21.06431 | 960 262 0291 | (960 262 0191) | 1 | KAVRAMA HALKA SETİ | PARTS KIT | | | ♦ | ♦ |
| | | | (960 262 0091) | | | | | | | |
| | | | (947 260 4036) | | | | | | | |
| 25 | K21.06730 | 970 994 3541 | (000472 100000) | 1 | GRUP DURDURUCU KİLİT SEKMANI | RETAINING RING | 3,00mm | | ♦ | ♦ |
| 26 | K21.06533 | 028 997 2348 | (004 997 2248) | 1 | GRUP DURDURUCU KAPAK ORİNGİ | O-RING | 100X3mm | | ♦ | ♦ |
| 27 | K21.04192 | 406 337 0252 | | 1 | GRUP MİLİ ÖN BİLYA RAYNELİ | THRUST WASHER | 0,10mm | | ♦ | ♦ |
| 27 | K21.04150 | 406 337 0352 | | 1 | GRUP MİLİ ÖN BİLYA RAYNELİ | THRUST WASHER | 0,20mm | | ♦ | ♦ |
| 27 | K21.94150 | | | 1 | GRUP MİLİ ÖN BİLYA RAYNELİ | THRUST WASHER | 0,25mm | | ♦ | ♦ |

NOTES :
Parts coded with alphabetic letters are used together.

GEARBOX TYPE:
714180 - GO240 - 8 / 6,57 - 0,63
714183 - GO240 - 8 EPS

NOTLAR :
Alfabetik harf ile kodlanan parçalar birlikte kullanılır.

ŞANZIMAN TİPLERİ :
714180 - GO240 - 8 / 6,57 - 0,63
714183 - GO240 - 8 EPS





Original parts names, oem numbers, symbols and descriptions used in this catalogue are for reference purposes only.

# GEARBOX GO 240-8 / 6,57 - 0,63

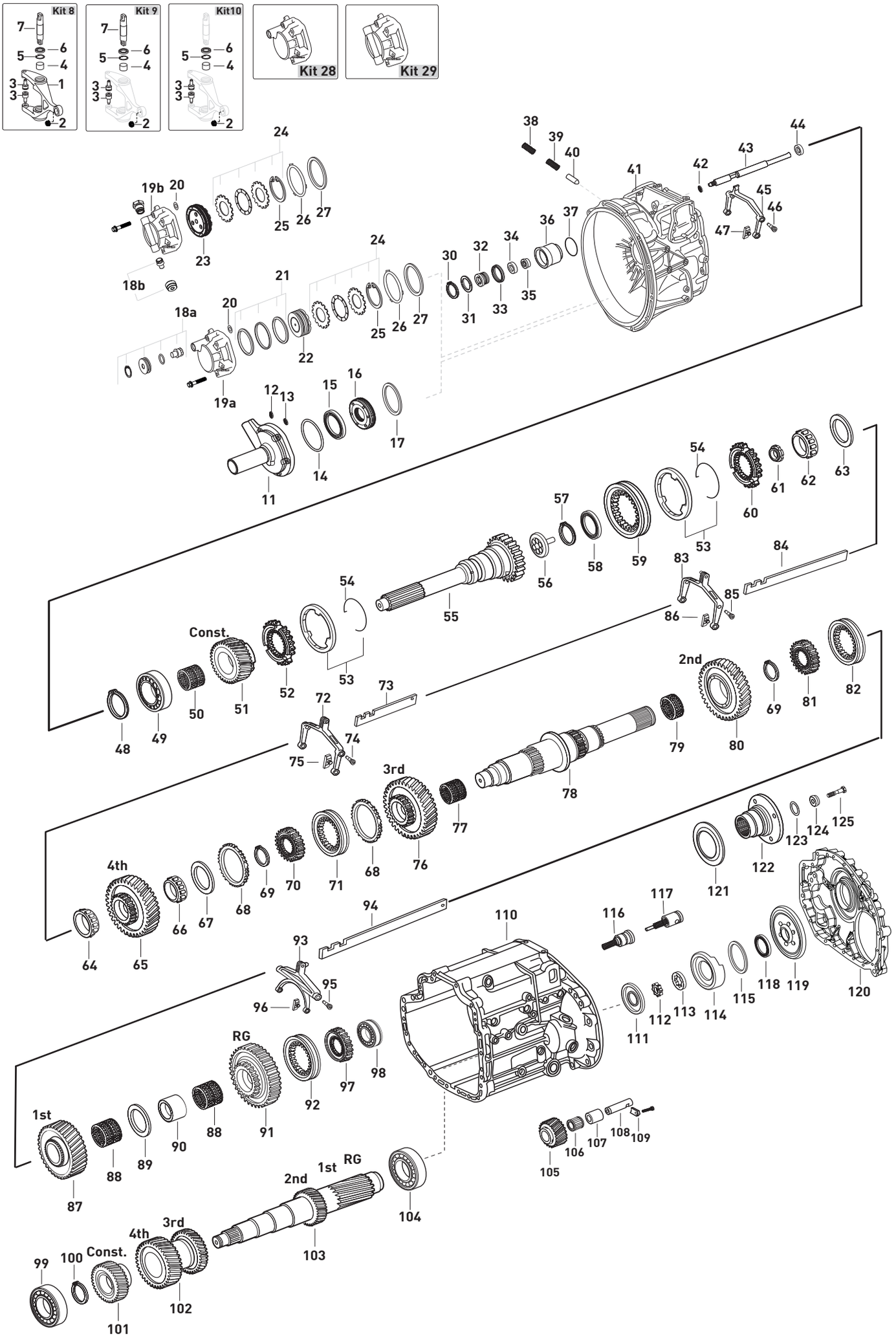




Original parts names, oem numbers, symbols and descriptions used in this catalogue are for reference purposes only.

| Fig. | Kacmaz No | Oem No | Oem Old No | Pcs. | Ürün Tanımı | Description | Sizes | Not | 714180 | 714183 | | |
|---|---|---|---|---|---|---|---|---|---|---|---|---|
| 27 | K21.04338 | 406 337 0452 | | 1 | GRUP MİLİ ÖN BİLYA RAYNELİ | THRUST WASHER | 0,30mm | | ♦ | ♦ | | |
| 27 | K21.04196 | 389 263 5352 | (389 263 3252) | 1 | GRUP MİLİ ÖN BİLYA RAYNELİ | THRUST WASHER | 0,40mm | | ♦ | ♦ | | |
| 27 | K21.04194 | 389 263 3352 | | 1 | GRUP MİLİ ÖN BİLYA RAYNELİ | THRUST WASHER | 0,45mm | | ♦ | ♦ | | |
| 27 | K21.06719 | 389 263 5652 | | 1 | GRUP MİLİ ÖN BİLYA RAYNELİ | THRUST WASHER | 0,49mm | | ♦ | ♦ | | |
| 27 | K21.04197 | 389 263 5852 | (389 263 3552) | 1 | GRUP MİLİ ÖN BİLYA RAYNELİ | THRUST WASHER | 0,55mm | | ♦ | ♦ | | |
| 27 | K21.04340 | 389 263 6052 | | 1 | GRUP MİLİ ÖN BİLYA RAYNELİ | THRUST WASHER | 0,61mm | | ♦ | ♦ | | |
| 27 | K21.04198 | 389 263 6352 | (389 263 3852) | 1 | GRUP MİLİ ÖN BİLYA RAYNELİ | THRUST WASHER | 0,70mm | | ♦ | ♦ | | |
| 27 | K21.04154 | 389 263 3952 | | 1 | GRUP MİLİ ÖN BİLYA RAYNELİ | THRUST WASHER | 0,75mm | | ♦ | ♦ | | |
| 27 | K21.04199 | 389 263 6852 | | 1 | GRUP MİLİ ÖN BİLYA RAYNELİ | THRUST WASHER | 0,85mm | | ♦ | ♦ | | |
| 27 | K21.04200 | 389 263 7352 | | 1 | GRUP MİLİ ÖN BİLYA RAYNELİ | THRUST WASHER | 1,00mm | | ♦ | ♦ | | |
| 27 | K21.04201 | 389 263 7852 | | 1 | GRUP MİLİ ÖN BİLYA RAYNELİ | THRUST WASHER | 1,15mm | | ♦ | ♦ | | |
| 27 | K21.04202 | 389 263 8352 | | 1 | GRUP MİLİ ÖN BİLYA RAYNELİ | THRUST WASHER | 1,30mm | | ♦ | ♦ | | |
| 28 | K21.06487 | | | 1 | GRUP DURDURUCU KAPAĞI KOMPLE | REPAIR KIT | | (K) | ♦ | ♦ | | |
| 29 | K21.06948 | 960 260 5965 | (960 260 4865) | 1 | GRUP DURDURUCU KAPAĞI KOMPLE | REPAIR KIT | | (L) | ♦ | ♦ | | |
| 30 | | 006 994 4241 | (000472 065001) | 1 | TAKVİYE PİSTON SEKMANI | RETAINING RING | 65X2,5mm | | ♦ | ♦ | | |
| 31 | K21.04233 | 389 262 2555 | | 1 | TAKVİYE SİLİNDİR PULU | SPACER WASHER | 0,70mm | | ♦ | ♦ | | |
| 31 | K21.04234 | 389 262 2655 | | 1 | TAKVİYE SİLİNDİR PULU | SPACER WASHER | 0,90mm | | ♦ | ♦ | | |
| 31 | K21.04112 | 389 262 3254 | | 1 | TAKVİYE SİLİNDİR PULU | SPACER WASHER | 1,05mm | | ♦ | ♦ | | |
| 31 | K21.04111 | 389 262 3354 | | 1 | TAKVİYE SİLİNDİR PULU | SPACER WASHER | 1,10mm | | ♦ | ♦ | | |
| 31 | K21.04109 | 389 262 3554 | | 1 | TAKVİYE SİLİNDİR PULU | SPACER WASHER | 1,20mm | | ♦ | ♦ | | |
| 31 | K21.04105 | 389 262 2052 | | 1 | TAKVİYE SİLİNDİR PULU | SPACER WASHER | 1,40mm | | ♦ | ♦ | | |
| 31 | K21.04093 | 389 262 2355 | | 1 | TAKVİYE SİLİNDİR PULU | SPACER WASHER | 1,79mm | | ♦ | ♦ | | |
| 31 | K21.04025 | 389 262 3252 | | 1 | TAKVİYE SİLİNDİR PULU | SPACER WASHER | 2,00mm | | ♦ | ♦ | | |
| 31 | K21.04024 | 389 262 3352 | | 1 | TAKVİYE SİLİNDİR PULU | SPACER WASHER | 2,50mm | | ♦ | ♦ | | |
| 32 | K21.06994 | 945 267 0218 | (387 267 0918) | 1 | TAKVİYE MİL PİSTONU | PISTON | | | ♦ | ♦ | | |
| | | | (387 267 0618) | | | | | | | | | |
| 33 | K21.03524 | 006 997 6447 | (020 997 6647) | 1 | TAKVİYE HAVA KEÇESİ | OIL SEAL | 41X48X11,5mm | | ♦ | ♦ | | |
| | | | (012 997 3347) | | | | | | | | | |
| 34 | K21.04178 | 387 267 0650 | (387 267 0250) | 1 | TAKVİYE SİLİNDİR BURCU | BUSHING | 34X22X8mm | | ♦ | ♦ | | |
| 35 | K21.03523 | 000 267 0197 | (000 267 0397) | 1 | TAKVİYE HİLAL MİL KEÇESİ | OIL SEAL | 22X32X8mm | | ♦ | ♦ | | |
| 36 | K21.06036 | 945 267 0819 | (945 267 0119) | 1 | TAKVİYE SİLİNDİR GÖVDESİ | CYLINDER | | | ♦ | ♦ | | |
| | | | (945 267 0719) | | | | | | | | | |
| | | | (945 267 0019) | | | | | | | | | |
| 37 | K21.06534 | 022 997 4248 | | 1 | TAKVİYE SİLİNDİR ORİNGİ | O-RING | 55,6X3mm | | ♦ | ♦ | | |
| 38 | K21.06015 | 387 993 4501 | | 1 | ŞANZ.TAKVİYE KİLİT FİŞEK YAYI | SPRING | 6,2X63mm | | ♦ | ♦ | | |
| 39 | K21.03500 | 387 993 4401 | (387 993 2501) | 1 | KİLİT YAYI | SPRING | 9,8X63,3mm | | ♦ | ♦ | | |
| 40 | K21.03492 | 389 267 1174 | (387 267 0074) | 1 | KİLİT FİŞEĞİ | PIN | | | ♦ | ♦ | | |
| 41 | | 389 261 4801 | | 1 | ŞANZIMAN ÖN GÖVDE | HOUSING | | | ♦ | ♦ | | |
| 41 | | 389 261 5501 | | 1 | ŞANZIMAN ÖN GÖVDE | HOUSING | | | ♦ | ♦ | | |
| 42 | K21.04160 | 387 263 2652 | | 1 | TAKVİYE HİLAL MİL PULU | SPACER WASHER | 0,20mm | | ♦ | ♦ | | |
| 42 | K21.04161 | 387 263 2752 | | 1 | TAKVİYE HİLAL MİL PULU | SPACER WASHER | 0,40mm | | ♦ | ♦ | | |
| 42 | | 387 263 2852 | | 1 | TAKVİYE HİLAL MİL PULU | SPACER WASHER | 0,60mm | | ♦ | ♦ | | |
| 42 | | 387 263 3052 | | 1 | TAKVİYE HİLAL MİL PULU | SPACER WASHER | 1,00mm | | ♦ | ♦ | | |
| 43 | | 656 267 0117 | | 1 | TAKVİYE HİLAL MİLİ | G.SHIFT RAIL | | | ♦ | ♦ | | |
| 44 | K21.04252 | 000 992 7603 | (389 267 0050) | 1 | TAKVİYE HİLAL MİL BURCU | BUSHING | 21X27X16mm | | ♦ | ♦ | | |
| 45 | | 656 265 0001 | | 1 | TAKVİYE HİLALİ | GEAR SHIFT FORK | | | ♦ | ♦ | | |
| 46 | K21.04307 | 960 265 0774 | (945 265 1274) | 2 | HİLAL CİVATASI | PIN | | | ♦ | ♦ | | |
| | | | (945 265 2774) | | | | | | | | | |
| | | | (945 265 2974) | | | | | | | | | |
| 47 | K21.03431 | 960 265 0049 | (947 265 0349) | 2 | TAKVİYE HİLAL PABUCU | SLIDING PAD | | | ♦ | ♦ | | |
| | | | (389 265 2749) | | | | | | | | | |
| 48 | K21.04347 | 387 262 8673 | | 1 | PRİZDİREK ÖN BİLYA SEKMANI | RETAINING RING | 3,15mm | | ♦ | ♦ | | |
| 48 | K21.04346 | 387 262 8773 | | 1 | PRİZDİREK ÖN BİLYA SEKMANI | RETAINING RING | 3,20mm | | ♦ | ♦ | | |

NOTES :
Parts coded with alphabetic letters are used together.

GEARBOX TYPE:
714180 - GO240 - 8 / 6,57 - 0,63
714183 - GO240 - 8 EPS

NOTLAR :
Alfabetik harf ile kodlanan parçalar birlikte kullanılır.

ŞANZIMAN TİPLERİ :
714180 - GO240 - 8 / 6,57 - 0,63
714183 - GO240 - 8 EPS

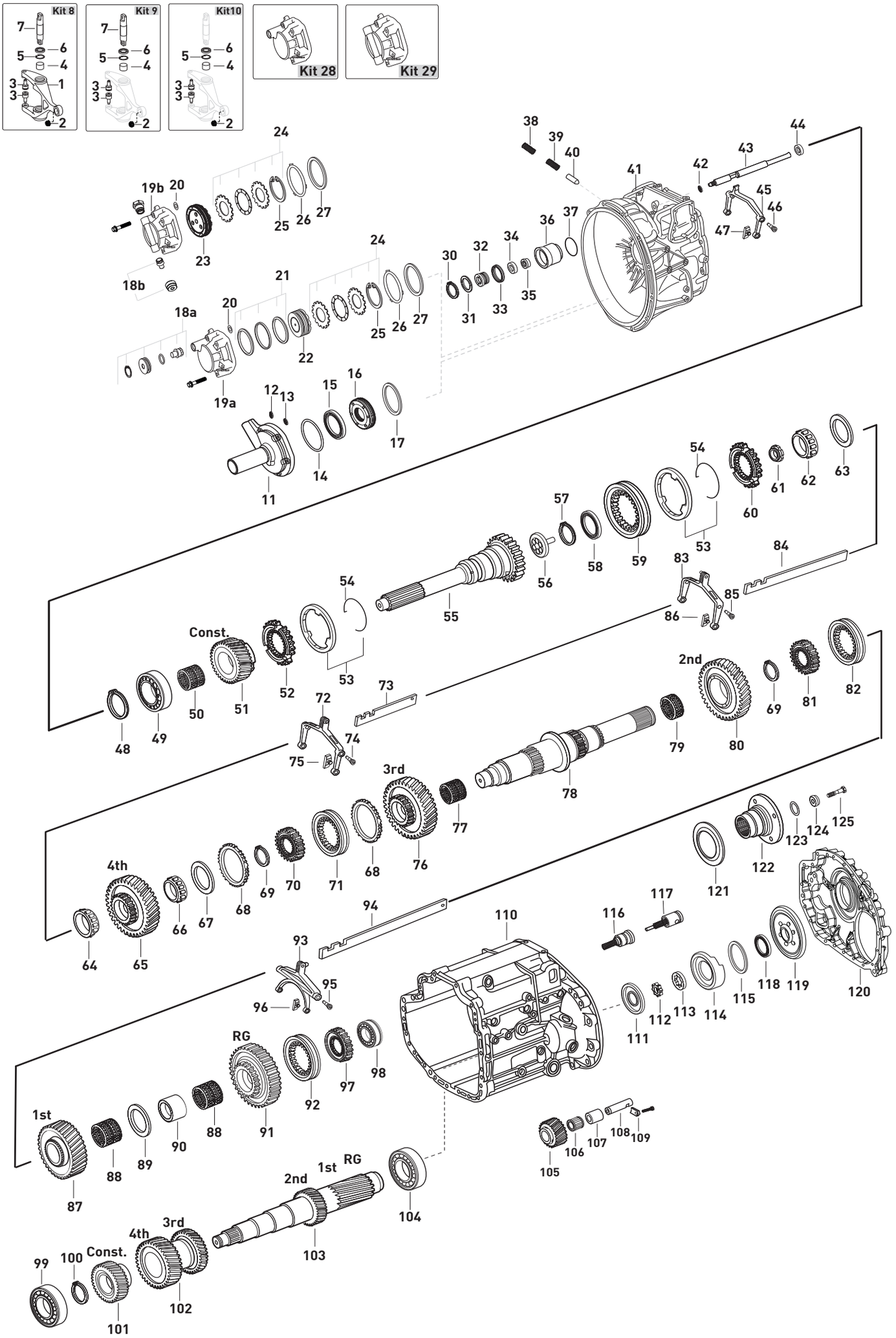






Original parts names, oem numbers, symbols and descriptions used in this catalogue are for reference purposes only.

| Fig. | Kacmaz No | Oem No | Oem Old No | Pcs. | Ürün Tanımı | Description | Sizes | Not | 714180 | 714183 |
|---|---|---|---|---|---|---|---|---|---|---|
| 48 | K21.07015 | 387 262 8873 | | 1 | PRİZDİREK ÖN BİLYA SEKMANI | RETAINING RING | 3,25mm | | ♦ | ♦ |
| 48 | K21.04348 | 387 262 8973 | | 1 | PRİZDİREK ÖN BİLYA SEKMANI | RETAINING RING | 3,30mm | | ♦ | ♦ |
| 48 | K21.07016 | 387 262 9073 | | 1 | PRİZDİREK ÖN BİLYA SEKMANI | RETAINING RING | 3,35mm | | ♦ | ♦ |
| 48 | K21.04349 | 387 262 9173 | | 1 | PRİZDİREK ÖN BİLYA SEKMANI | RETAINING RING | 3,40mm | | ♦ | ♦ |
| 48 | K21.07017 | 387 262 9273 | | 1 | PRİZDİREK ÖN BİLYA SEKMANI | RETAINING RING | 3,45mm | | ♦ | ♦ |
| 48 | K21.04350 | 387 262 9373 | | 1 | PRİZDİREK ÖN BİLYA SEKMANI | RETAINING RING | 3,50mm | | ♦ | ♦ |
| 49 | K21.03618 | 011 981 1305 | (014 981 9005) | 1 | PRİZDİREK ÖN BİLYA | ROLLER BEARING | 75X140X34,25mm | | ♦ | ♦ |
| | | | (008 981 8605) | | | | | | | |
| | | | (008 981 2605) | | | | | | | |
| 50 | | 022 981 8710 | | 1 | TAKVİYE MASURA BİLYA | NEEDLE CAGE | | | ♦ | ♦ |
| 51 | | 656 262 1010 | | 1 | TAKVİYE DİŞLİSİ 37 DİŞ | CONSTANT GEAR 37 T. | | | ♦ | ♦ |
| 52 | | 656 262 1334 | (656 262 0734) | 1 | TAKVİYE SENKROMENÇ | ENGAGING RING | | | ♦ | ♦ |
| 53 | K21.06299 | 947 260 3545 | (947 260 5145) | 2 | TAKVİYE FRENLEME (C) | SYNCHRONIZING CONE / C | | | ♦ | ♦ |
| | | | (947 260 2945) | | | | | | | |
| | | | (947 260 0745) | | | | | | | |
| 54 | K21.03055 | 387 262 0893 | (387 262 0793) | 2 | FRENLEME TELİ | SPRING | | | ♦ | ♦ |
| 55 | | 656 262 7982 | | 1 | PRİZDİREK 66 DİŞ | INPUT SHAFT 66 T. | | | ♦ | ♦ |
| 56 | K21.04001 | 976 269 0034 | (960 269 0434) | 1 | PRİZDİREK YAĞ PİPETİ | OIL COLLECTOR | | | ♦ | ♦ |
| 57 | K21.04002 | 000 994 9841 | | 1 | PRİZDİREK YAĞ PİPET SEKMANI | RETAINING RING | | | ♦ | ♦ |
| 58 | K21.03510 | 001 262 0362 | (000 262 8762) | 1 | PRİZDİREK ARKA KEÇE | OIL SEAL | 78,5X105X7mm | | ♦ | ♦ |
| | | | (000 262 9162) | | | | | | | |
| 59 | K21.03151 | 945 262 6523 | (930 262 0523) | 1 | TAKVİYE HALKA | ENGAGING SLEEVE | | | ♦ | ♦ |
| 60 | | 960 262 0934 | | 1 | TAKVİYE SENKROMENÇ | ENGAGING RING | | WITH STOP | ♦ | ♦ |
| 60 | | 656 262 0234 | (656 262 0034) | 1 | TAKVİYE SENKROMENÇ | ENGAGING RING | | W/OUT STOP | ♦ | ♦ |
| 61 | K21.03432 | 945 990 0250 | (945 990 0150) | 1 | KAMALI MİL SOMUNU | NUT | M30X1,5 | | ♦ | ♦ |
| 62 | K21.03634 | 015 981 1705 | (014 981 8805) | 1 | KAMALI MİL UÇ BİLYA | ROLLER BEARING | 39,7X43,1mm | | ♦ | ♦ |
| | | | (021 981 2205) | | | | | | | |
| | | | (021 981 6105) | | | | | | | |
| 63 | K21.04024 | 389 262 3352 | | 1 | KAMALI MİL AYAR PULU | THRUST WASHER | 2,50mm | | ♦ | ♦ |
| 63 | K21.04025 | 389 262 3252 | | 1 | KAMALI MİL AYAR PULU | THRUST WASHER | 2,00mm | | ♦ | ♦ |
| 63 | K21.04026 | 389 262 3152 | | 1 | KAMALI MİL AYAR PULU | THRUST WASHER | 1,95mm | | ♦ | ♦ |
| 63 | K21.04027 | 389 262 3052 | | 1 | KAMALI MİL AYAR PULU | THRUST WASHER | 1,90mm | | ♦ | ♦ |
| 63 | K21.04028 | 389 262 2952 | | 1 | KAMALI MİL AYAR PULU | THRUST WASHER | 1,85mm | | ♦ | ♦ |
| 63 | K21.04092 | 389 262 2455 | | 1 | KAMALI MİL AYAR PULU | THRUST WASHER | 1,82mm | | ♦ | ♦ |
| 63 | K21.04093 | 389 262 2355 | | 1 | KAMALI MİL AYAR PULU | THRUST WASHER | 1,79mm | | ♦ | ♦ |
| 63 | K21.04094 | 389 262 2255 | | 1 | KAMALI MİL AYAR PULU | THRUST WASHER | 1,76mm | | ♦ | ♦ |
| 63 | K21.04095 | 389 262 2155 | | 1 | KAMALI MİL AYAR PULU | THRUST WASHER | 1,73mm | | ♦ | ♦ |
| 63 | K21.04096 | 389 262 2055 | | 1 | KAMALI MİL AYAR PULU | THRUST WASHER | 1,67mm | | ♦ | ♦ |
| 63 | K21.04097 | 389 262 1955 | | 1 | KAMALI MİL AYAR PULU | THRUST WASHER | 1,64mm | | ♦ | ♦ |
| 63 | K21.04098 | 389 262 1855 | | 1 | KAMALI MİL AYAR PULU | THRUST WASHER | 1,61mm | | ♦ | ♦ |
| 63 | K21.04099 | 389 262 1755 | | 1 | KAMALI MİL AYAR PULU | THRUST WASHER | 1,58mm | | ♦ | ♦ |
| 63 | K21.04100 | 389 262 2352 | | 1 | KAMALI MİL AYAR PULU | THRUST WASHER | 1,55mm | | ♦ | ♦ |
| 63 | K21.04101 | 389 262 1655 | | 1 | KAMALI MİL AYAR PULU | THRUST WASHER | 1,52mm | | ♦ | ♦ |
| 63 | K21.04102 | 389 262 1555 | | 1 | KAMALI MİL AYAR PULU | THRUST WASHER | 1,49mm | | ♦ | ♦ |
| 63 | K21.04103 | 389 262 1455 | | 1 | KAMALI MİL AYAR PULU | THRUST WASHER | 1,46mm | | ♦ | ♦ |
| 63 | K21.04104 | 389 262 1355 | | 1 | KAMALI MİL AYAR PULU | THRUST WASHER | 1,43mm | | ♦ | ♦ |
| 63 | K21.04105 | 389 262 2052 | | 1 | KAMALI MİL AYAR PULU | THRUST WASHER | 1,40mm | | ♦ | ♦ |
| 63 | K21.04106 | 389 262 1952 | | 1 | KAMALI MİL AYAR PULU | THRUST WASHER | 1,35mm | | ♦ | ♦ |
| 63 | K21.04107 | 389 262 2754 | | 1 | KAMALI MİL AYAR PULU | THRUST WASHER | 1,30mm | | ♦ | ♦ |
| 63 | K21.04108 | 389 262 3654 | | 1 | KAMALI MİL AYAR PULU | THRUST WASHER | 1,25mm | | ♦ | ♦ |
| 63 | K21.04109 | 389 262 3554 | | 1 | KAMALI MİL AYAR PULU | THRUST WASHER | 1,20mm | | ♦ | ♦ |
| 63 | K21.04110 | 389 262 3454 | | 1 | KAMALI MİL AYAR PULU | THRUST WASHER | 1,15mm | | ♦ | ♦ |
| 63 | K21.04111 | 389 262 3354 | | 1 | KAMALI MİL AYAR PULU | THRUST WASHER | 1,10mm | | ♦ | ♦ |

NOTES :
Parts coded with alphabetic letters are used together.

GEARBOX TYPE:
714180 - GO240 - 8 / 6,57 - 0,63
714183 - GO240 - 8 EPS

NOTLAR :
Alfabetik harf ile kodlanan parçalar birlikte kullanılır.

ŞANZIMAN TİPLERİ :
714180 - GO240 - 8 / 6,57 - 0,63
714183 - GO240 - 8 EPS





Original parts names, oem numbers, symbols and descriptions used in this catalogue are for reference purposes only.

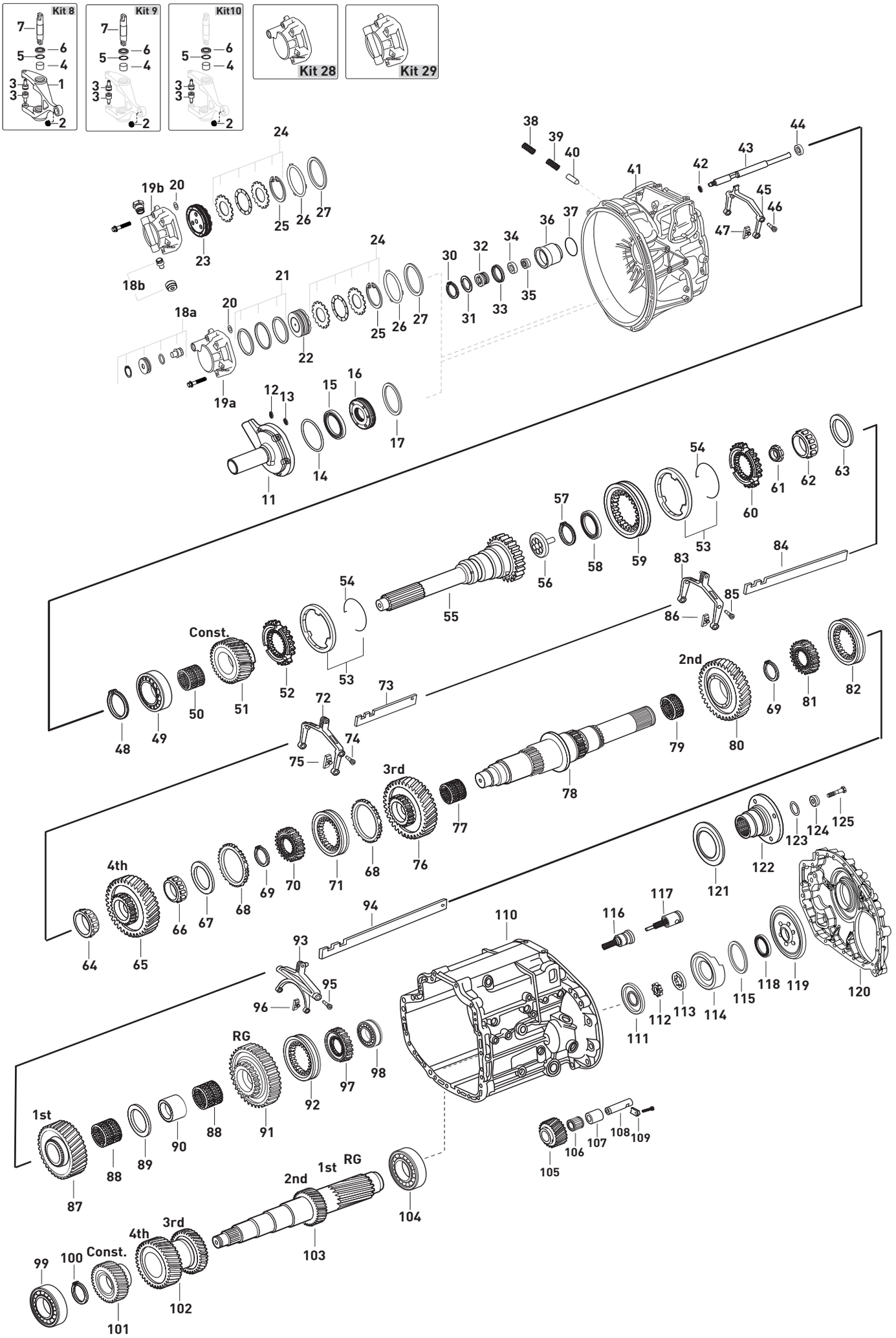






Original parts names, oem numbers, symbols and descriptions used in this catalogue are for reference purposes only.

| Fig. | Kacmaz No | Oem No | Oem Old No | Pcs. | Ürün Tanımı | Description | Sizes | Not | 714180 | 714183 | | |
|---|---|---|---|---|---|---|---|---|---|---|---|---|
| 63 | K21.04112 | 389 262 3254 | | 1 | KAMALI MİL AYAR PULU | THRUST WASHER | 1,05mm | | ♦ | ♦ | | |
| 63 | K21.04113 | 389 262 2854 | | 1 | KAMALI MİL AYAR PULU | THRUST WASHER | 0,50mm | | ♦ | ♦ | | |
| 63 | K21.94113 | | | 1 | KAMALI MİL AYAR PULU | THRUST WASHER | 0,40mm | | ♦ | ♦ | | |
| 63 | K21.84113 | | | 1 | KAMALI MİL AYAR PULU | THRUST WASHER | 0,30mm | | ♦ | ♦ | | |
| 63 | K21.74113 | | | 1 | KAMALI MİL AYAR PULU | THRUST WASHER | 0,20mm | | ♦ | ♦ | | |
| 63 | K21.64113 | | | 1 | KAMALI MİL AYAR PULU | THRUST WASHER | 0,10mm | | ♦ | ♦ | | |
| 64 | K21.03629 | 015 981 7605 | (015 981 2005) | 1 | 4.VİTES DİŞLİSİ ÖN BİLYA | ROLLER BEARING | 50X41mm | | ♦ | ♦ | | |
| | | | (011 981 4705) | | | | | | | | | |
| | | | (011 981 5305) | | | | | | | | | |
| 65 | | 656 262 0910 | | 1 | 4.VİTES DİŞLİSİ 24 DİŞ | GEAR 4th 24 T. | | | ♦ | ♦ | | |
| 66 | K21.03636 | 017 981 8305 | | 1 | 4.VİTES DİŞLİSİ ARKA BİLYA | ROLLER BEARING | 52X24mm | | ♦ | ♦ | | |
| 67 | | 656 262 0055 | | 1 | SENKROMENÇ PULU | WASHER | | | ♦ | ♦ | | |
| 68 | | 656 262 0334 | | 2 | 3./4. VİTES SENKROMENÇ | SYNCHRONIZING CONE | | | ♦ | ♦ | | |
| 69 | K21.04336 | 387 262 0473 | | 2 | 1./2./3./4.VİTES YILDIZ DİŞLİ SEKMANI | RETAINING RING | 2,40mm | | ♦ | ♦ | | |
| 69 | K21.07018 | 387 262 0573 | | 2 | 1./2./3./4.VİTES YILDIZ DİŞLİ SEKMANI | RETAINING RING | 2,45mm | | ♦ | ♦ | | |
| 69 | K21.04352 | 387 262 0673 | | 2 | 1./2./3./4.VİTES YILDIZ DİŞLİ SEKMANI | RETAINING RING | 2,50mm | | ♦ | ♦ | | |
| 69 | K21.07019 | 387 262 0773 | | 2 | 1./2./3./4.VİTES YILDIZ DİŞLİ SEKMANI | RETAINING RING | 2,55mm | | ♦ | ♦ | | |
| 69 | K21.04337 | 387 262 0873 | | 2 | 1./2./3./4.VİTES YILDIZ DİŞLİ SEKMANI | RETAINING RING | 2,60mm | | ♦ | ♦ | | |
| 69 | K21.06929 | 387 262 0973 | | 2 | 1./2./3./4.VİTES YILDIZ DİŞLİ SEKMANI | RETAINING RING | 2,65mm | | ♦ | ♦ | | |
| 69 | K21.06669 | 387 262 7673 | | 2 | 1./2./3./4.VİTES YILDIZ DİŞLİ SEKMANI | RETAINING RING | 2,70mm | | ♦ | ♦ | | |
| 69 | K21.06930 | 387 262 7873 | | 2 | 1./2./3./4.VİTES YILDIZ DİŞLİ SEKMANI | RETAINING RING | 2,80mm | | ♦ | ♦ | | |
| 69 | K21.06928 | 387 262 4173 | | 2 | 1./2./3./4.VİTES YILDIZ DİŞLİ SEKMANI | RETAINING RING | 2,90mm | | ♦ | ♦ | | |
| 69 | K21.06906 | 387 262 4373 | | 2 | 1./2./3./4.VİTES YILDIZ DİŞLİ SEKMANI | RETAINING RING | 3,00mm | | ♦ | ♦ | | |
| 69 | K21.06922 | 387 262 4573 | | 2 | 1./2./3./4.VİTES YILDIZ DİŞLİ SEKMANI | RETAINING RING | 3,10mm | | ♦ | ♦ | | |
| 69 | K21.06918 | 387 262 9773 | | 2 | 1./2./3./4.VİTES YILDIZ DİŞLİ SEKMANI | RETAINING RING | 3,20mm | | ♦ | ♦ | | |
| 70 | | 656 262 1335 | (656 262 0135) | 1 | 3./4.VİTES YILDIZ DİŞLİ | SYNCHRONIZER HUB | | | ♦ | ♦ | | |
| | | | (656 262 0835) | | | | | | | | | |
| 71 | | 656 262 1123 | (656 262 0023) | 1 | 3./4.VİTES HALKA | ENGAGING SLEEVE | | | ♦ | ♦ | | |
| | | | (656 262 0423) | | | | | | | | | |
| 72 | | 656 260 0130 | | 1 | 3./4.VİTES HİLALİ | SHIFTING FORK | | | ♦ | ♦ | | |
| 73 | | 656 265 0504 | | 1 | 3./4.VİTES HİLAL ÇITASI | SHIFTING ROD | | | ♦ | ♦ | | |
| 74 | K21.04307 | 960 265 0774 | (945 265 1274) | 2 | HİLAL CİVATASI | PIN | | | ♦ | ♦ | | |
| | | | (945 265 2974) | | | | | | | | | |
| | | | (945 265 2774) | | | | | | | | | |
| 75 | K21.03565 | 947 265 0449 | | 2 | 3./4.VİTES HİLAL PABUCU | SLIDING PAD | | | ♦ | ♦ | | |
| 76 | | 656 262 0117 | (656 262 0917) | 1 | 3.VİTES DİŞLİSİ 25 DİŞ | GEAR 3rd 25 T. | | | ♦ | ♦ | | |
| 77 | K21.03823 | 019 981 9210 | (023 981 1210) | 1 | 3.VİTES MASURA BİLYA | NEEDLE CAGE | 78X86X48mm | | ♦ | ♦ | | |
| | | | (023 981 5110) | | | | | | | | | |
| 78 | | 656 262 0705 | | 1 | KAMALI MİL | MAIN SHAFT | | | ♦ | ♦ | | |
| 79 | K21.03845 | 008 981 8610 | (007 981 5510) | 1 | 2.VİTES MASURA BİLYA | NEEDLE CAGE | 92X100X49,5mm | | ♦ | ♦ | | |
| | | | (019 981 3410) | | | | | | | | | |
| | | | (018 981 7910) | | | | | | | | | |
| 80 | | 656 262 0212 | | 1 | 2.VİTES DİŞLİSİ 37 DİŞ | GEAR 2nd 37 T. | | | ♦ | ♦ | | |
| 81 | | 656 262 1035 | (656 262 0035) | 1 | 1./2.VİTES YILDIZ DİŞLİ | SYNCHRONIZER HUB | | | ♦ | ♦ | | |
| | | | (656 262 0535) | | | | | | | | | |
| | | | (656 262 0735) | | | | | | | | | |
| 82 | | 656 262 1123 | (656 262 0023) | 1 | 1./2.VİTES HALKA | ENGAGING SLEEVE | | | ♦ | ♦ | | |
| | | | (656 262 0423) | | | | | | | | | |
| 83 | | 656 260 0330 | | 1 | 1./2.VİTES HİLALİ | SHIFTING FORK | | | ♦ | ♦ | | |
| 84 | | 655 265 0004 | | 1 | 1./2.VİTES HİLAL ÇITASI | SHIFTING ROD | | | ♦ | ♦ | | |
| 85 | K21.04307 | 960 265 0774 | (945 265 1274) | 2 | HİLAL CİVATASI | PIN | | | ♦ | ♦ | | |
| | | | (945 265 2974) | | | | | | | | | |
| | | | (945 265 2774) | | | | | | | | | |

NOTES :
Parts coded with alphabetic letters are used together.

GEARBOX TYPE:
714180 - GO240 - 8 / 6,57 - 0,63
714183 - GO240 - 8 EPS

NOTLAR :
Alfabetik harf ile kodlanan parçalar birlikte kullanılır.

ŞANZIMAN TİPLERİ :
714180 - GO240 - 8 / 6,57 - 0,63
714183 - GO240 - 8 EPS





Original parts names, oem numbers, symbols and descriptions used in this catalogue are for reference purposes only.

# GEARBOX GO 240-8 / 6,57 - 0,63

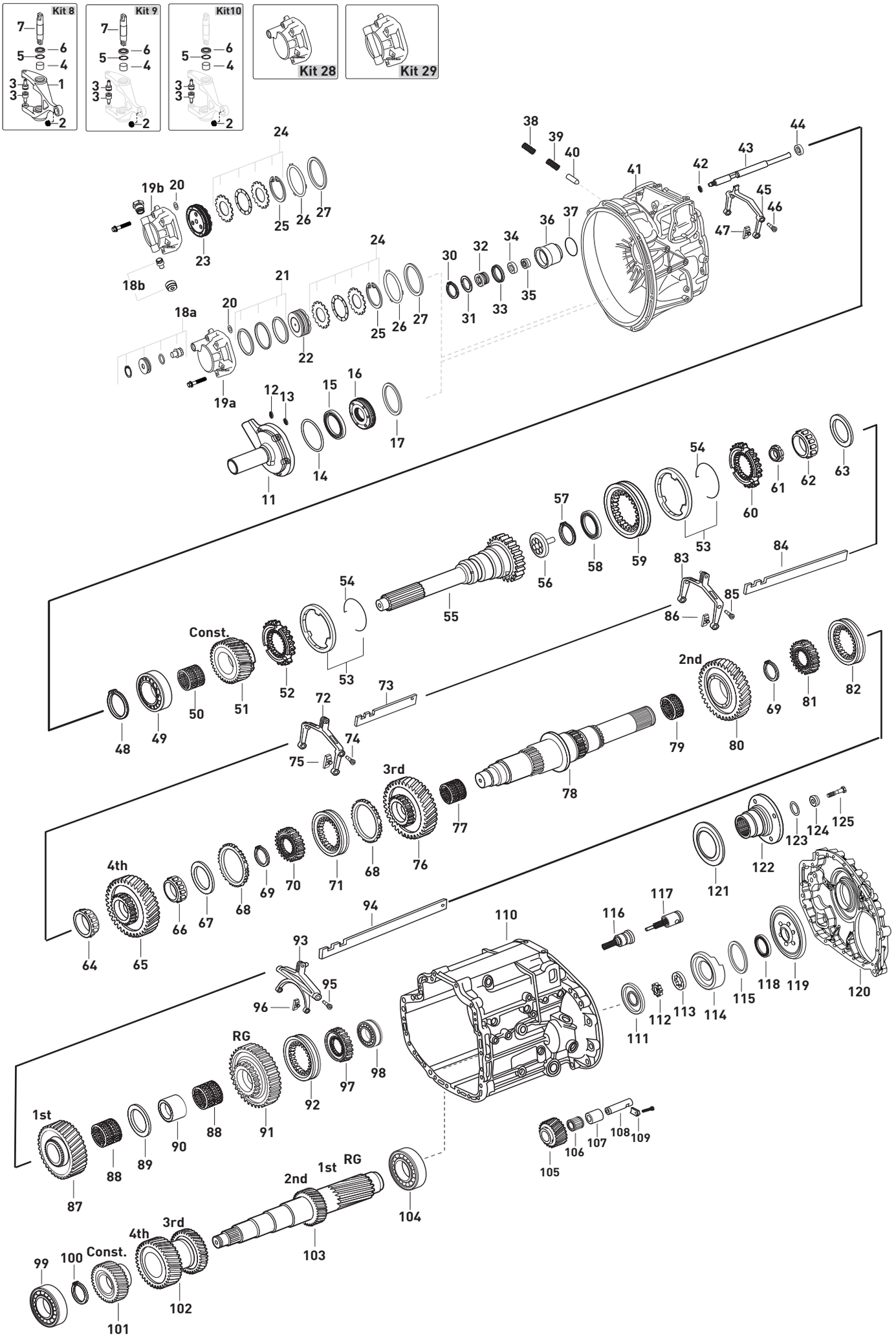




Original parts names, oem numbers, symbols and descriptions used in this catalogue are for reference purposes only.

| Fig. | Kacmaz No | Oem No | Oem Old No | Pcs. | Ürün Tanımı | Description | Sizes | Not | 714180 | 714183 | | |
|---|---|---|---|---|---|---|---|---|---|---|---|---|
| 86 | K21.03565 | 947 265 0449 | | 2 | 1./2.VİTES HİLAL PABUCU | SLIDING PAD | | | ♦ | ♦ | | |
| 87 | | 656 262 0111 | | 1 | 1.VİTES DİŞLİSİ 50 DİŞ | GEAR 1st 50 T | | | ♦ | ♦ | | |
| 88 | K21.03859 | 023 981 5210 | (022 981 5810) | 2 | 1./ GERİ VİTES MASURA BİLYA | NEDDLE CAGE | 85X93X60mm | | ♦ | ♦ | | |
| | | | (022 981 8510) | | | | | | | | | |
| | | | (022 981 5410) | | | | | | | | | |
| 89 | K21.04284 | 389 262 2855 | | 1 | 1.VİTES MESAFE AYAR PULU | THRUST WASHER | 5,50mm | | ♦ | ♦ | | |
| 90 | | 656 262 0050 | | 1 | GERİ VİTES BURCU | BEARING RACE | | | ♦ | ♦ | | |
| 91 | | 656 262 0333 | | 1 | GERİ VİTES DİŞLİSİ 47 DİŞ | REVERSE GEAR 47 T. | | | ♦ | ♦ | | |
| 92 | | 656 262 0823 | (656 262 0323) | 1 | GERİ VİTES HALKASI | ENGAGING SLEEVE | | | ♦ | ♦ | | |
| | | | (656 262 0523) | | | | | | | | | |
| 93 | | 656 260 0230 | | 1 | GERİ VİTES HİLALİ | SHIFTING FORK | | | ♦ | ♦ | | |
| 94 | | 656 265 0104 | | 1 | GERİ VİTES HİLAL ÇITASI | SHIFTING ROD | | | ♦ | ♦ | | |
| 95 | K21.04307 | 960 265 0774 | (945 265 1274) | 2 | HİLAL CİVATASI | PIN | | | ♦ | ♦ | | |
| | | | (945 265 2974) | | | | | | | | | |
| | | | (945 265 2774) | | | | | | | | | |
| 96 | K21.03410 | 947 265 0249 | (945 265 0149) | 2 | GERİ VİTES HİLAL PABUCU | SLIDING PAD | | | ♦ | ♦ | | |
| 97 | | 656 262 0235 | | 1 | GERİ VİTES YILDIZ DİŞLİ | SYNCHRONIZER HUB | | | ♦ | ♦ | | |
| 98 | K21.03658 | 012 981 3705 | (018 981 6705) | 1 | KAMALI MİL ARKA BİLYA | ROLLER BEARING | 65X140X13,5mm | | ♦ | ♦ | | |
| 99 | | 019 981 6005 | (012 981 7305) | 1 | GRUP MİLİ ÖN BİLYA | ROLLER BEARING | 50,8X100X46,04mm | | ♦ | ♦ | | |
| | | | (012 981 9605) | | | | | | | | | |
| | | | (013 981 5605) | | | | | | | | | |
| 100 | K21.06426 | 900055 060300 | (000 264 5351) | 1 | GRUP MİLİ ÖN BİLYA SEKMANI | RETAINING RING | 3,00mm | | ♦ | ♦ | | |
| 101 | | 656 263 0810 | (656 263 0610) | 1 | TAKVİYE DİŞLİ KARŞILIĞI 40 DİŞ | CONSTANT GEAR 40 T. | | | ♦ | ♦ | | |
| 102 | | 656 263 0410 | | 1 | 3./4.VİT.DİŞLİ KARŞILIĞI 34/41 DİŞ | DOUB.GEAR 3rd/4th 34/41 T. | | | ♦ | ♦ | | |
| 103 | | 656 263 0202 | (656 263 0102) | 1 | GRUP MİLİ 13/23 DİŞ | COUNTER SHAFT 13/23 T. | | | ♦ | ♦ | | |
| 104 | K21.03660 | 012 981 3605 | (015 981 4105) | 1 | GRUP MİLİ ARKA BİLYA | ROLLER BEARING | 45X110X12mm | | ♦ | ♦ | | |
| 105 | | 656 263 0131 | | 1 | KÜÇÜK GERİ VİTES | REV.IDLER GEAR | | | ♦ | ♦ | | |
| 106 | | 015 981 4110 | (019 981 0510) | 1 | KÜÇÜK GERİ VİTES MASURA BİLYA | NEEDLE BEARING | 48X60X31mm | | ♦ | ♦ | | |
| 107 | K21.06146 | 389 263 0650 | | 1 | K.GERİ VİTES MASURA BİLYA ÇANAĞI | BUSHING | 63,10mm | | ♦ | ♦ | | |
| 108 | K21.06148 | 976 263 0330 | (389 263 0730) | 1 | KÜÇÜK GERİ VİTES PİMİ | PIN | | | ♦ | ♦ | | |
| 109 | | 976 263 0041 | | 1 | KÜÇÜK GERİ VİTES PİM TUTUCU | PIN | | | ♦ | ♦ | | |
| 110 | | 389 261 3829 | | 1 | ŞANZIMAN ORTA GÖVDE | HOUSING | | | ♦ | ♦ | | |
| 111 | K21.03458 | 389 269 2001 | (389 269 1901) | 1 | YAĞ POMPA KAPAĞI | OIL PUMP COVER | | | ♦ | ♦ | | |
| 112 | K21.03459 | 389 269 1606 | (389 269 1706) | 1 | YAĞ POMPA İÇ ROTOR | OIL PUMP GEAR | | | ♦ | ♦ | | |
| 113 | K21.03414 | 389 269 0706 | (389 269 1206) | 1 | YAĞ POMPA DIŞ ROTOR | ROTOR | | | ♦ | ♦ | | |
| 114 | K21.06261 | 656 269 0001 | (629 269 0001) | 1 | YAĞ POMPA GÖVDESİ | OIL PUMP HOUSING | | | ♦ | ♦ | | |
| 115 | K21.04289 | 389 263 1352 | | 1 | YAĞ POMPA AYAR RAYNELİ | THRUST WASHER | 0,10mm | | ♦ | ♦ | | |
| 115 | K21.04290 | 389 263 1452 | | 1 | YAĞ POMPA AYAR RAYNELİ | THRUST WASHER | 0,15mm | | ♦ | ♦ | | |
| 115 | K21.04291 | 389 263 1552 | | 1 | YAĞ POMPA AYAR RAYNELİ | THRUST WASHER | 0,25mm | | ♦ | ♦ | | |
| 115 | K21.04292 | 389 263 1652 | | 1 | YAĞ POMPA AYAR RAYNELİ | THRUST WASHER | 0,30mm | | ♦ | ♦ | | |
| 115 | K21.04293 | 389 263 1752 | | 1 | YAĞ POMPA AYAR RAYNELİ | THRUST WASHER | 0,50mm | | ♦ | ♦ | | |
| 116 | K21.06953 | 960 260 1057 | | Kit | YAĞ BASINÇ VALFİ KOMPLE | VALVE KIT | | | ♦ | ♦ | | |
| 117 | K21.06973 | 960 260 1257 | | Kit | YAĞ BASINÇ VALFİ KOMPLE | VALVE KIT | | | ♦ | ♦ | | |
| 118 | K21.03519 | 023 997 8847 | (023 997 8547) | 1 | ŞANZIMAN ARKA KEÇE | OIL SEAL | 80X100X15,5mm | | ♦ | ♦ | | |
| | | | (020 997 6447) | | | | | | | | | |
| 119 | | 960 264 2420 | | 1 | RETARDER DİŞLİSİ | RETARDER GEAR | | | ♦ | ♦ | | |
| 119 | K21.06137 | 960 264 0420 | (629 264 0020) | 1 | RETARDER DİŞLİSİ 61 DİŞ | RETARDER GEAR 61 T. | | | ♦ | ♦ | | |
| 120 | | 656 261 0420 | | 1 | RETARDAR GÖVDESİ | HOUSING | | | ♦ | ♦ | | |
| 120 | | 656 261 1720 | | 1 | RETARDAR GÖVDESİ | HOUSING | | | ♦ | ♦ | | |
| 121 | K26.00392 | 942 356 0715 | (942 356 0315) | 1 | SENSÖR SACI | PULSE DISK | | | ♦ | ♦ | | |
| 122 | | 629 262 0145 | | 1 | ŞANZIMAN FLANŞI | COMPANION FLANGE | 4-H, Ø180mm | | ♦ | ♦ | | |
| 123 | K21.06990 | 027 997 3048 | (023 997 5548) | 1 | ŞANZIMAN FLANŞ ORİNGİ | O-RING | 56,52X5,33mm | | ♦ | ♦ | | |
| | | | (023 997 6048) | | | | | | | | | |

NOTES :
Parts coded with alphabetic letters are used together.

GEARBOX TYPE:
714180 - GO240 - 8 / 6,57 - 0,63
714183 - GO240 - 8 EPS

NOTLAR :
Alfabetik harf ile kodlanan parçalar birlikte kullanılır.

ŞANZIMAN TİPLERİ :
714180 - GO240 - 8 / 6,57 - 0,63
714183 - GO240 - 8 EPS

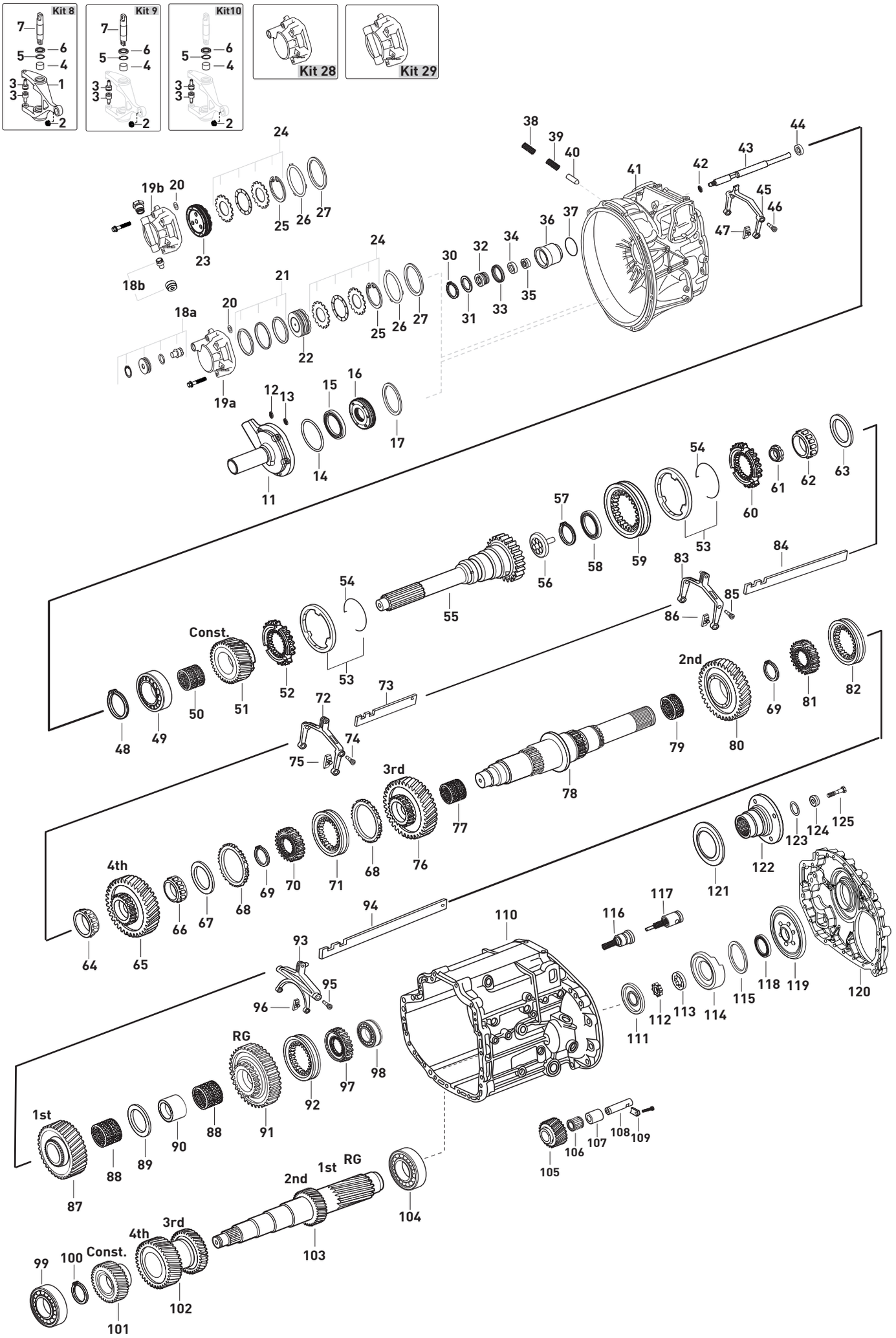






Original parts names, oem numbers, symbols and descriptions used in this catalogue are for reference purposes only.

| Fig. | Kacmaz No | Oem No | Oem Old No | Pcs. | Ürün Tanımı | Description | Sizes | Not | 714180 | 714183 |
|---|---|---|---|---|---|---|---|---|---|---|
| 124 | | 976 262 0362 | | 1 | ŞANZ.FLANŞI ALIN PULU | THRUST WASHER | | | ♦ | ♦ |
| 125 | | 000000 000963 | | 1 | ŞANZ.FLANŞI ALIN VİDASI | SCREW | M20X1,5X80 | | ♦ | ♦ |
| 125 | K21.06280 | 000000 006750 | (000000 005728) | 1 | ŞANZ.FLANŞI ALIN VİDASI | SCREW | M20X1,5X80 | | ♦ | ♦ |

NOTES :
Parts coded with alphabetic letters are used together.

GEARBOX TYPE:
714180 - GO240 - 8 / 6,57 - 0,63
714183 - GO240 - 8 EPS

NOTLAR :
Alfabetik harf ile kodlanan parçalar birlikte kullanılır.

ŞANZIMAN TİPLERİ :
714180 - GO240 - 8 / 6,57 - 0,63
714183 - GO240 - 8 EPS





Original parts names, oem numbers, symbols and descriptions used in this catalogue are for reference purposes only.

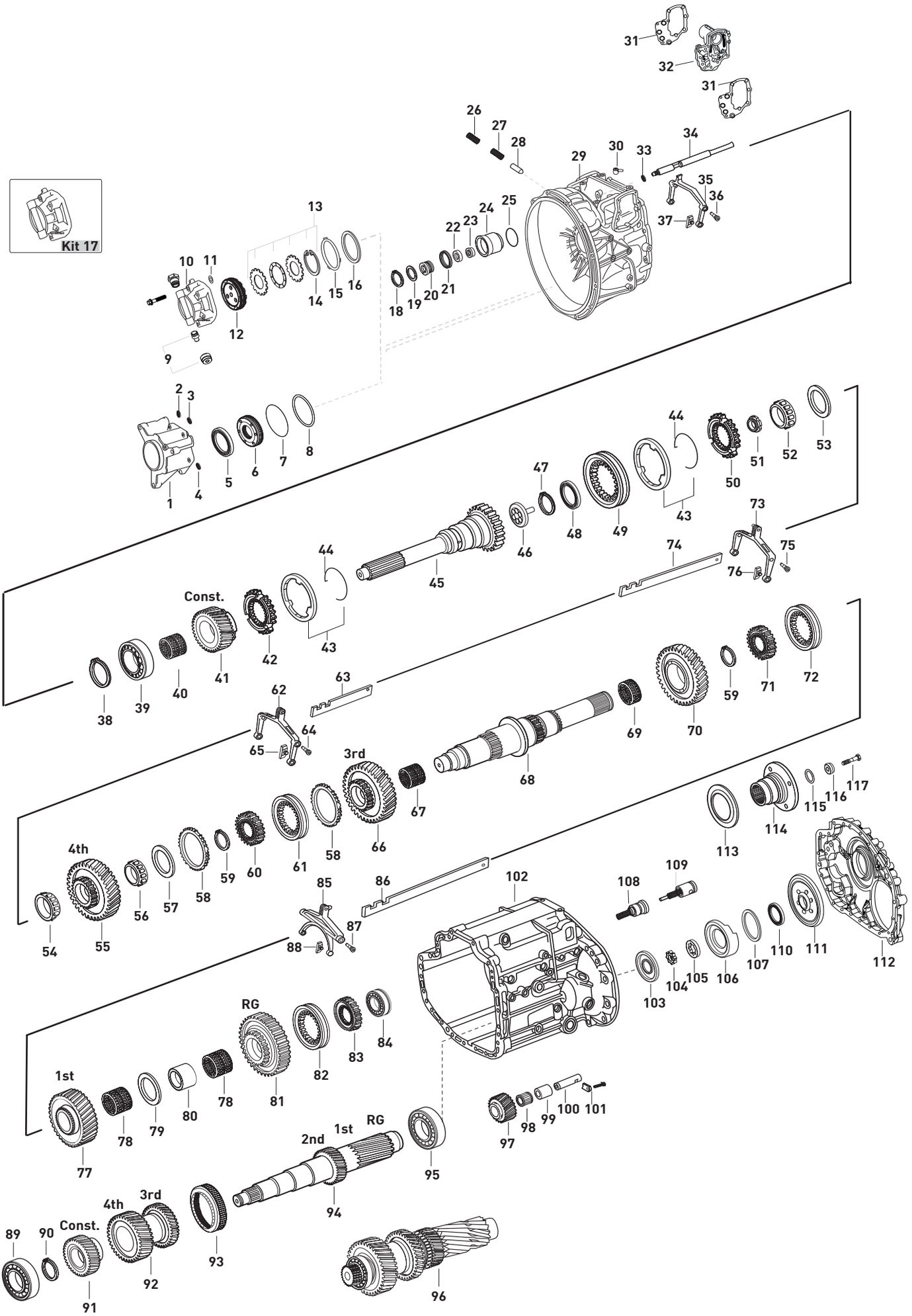




Original parts names, oem numbers, symbols and descriptions used in this catalogue are for reference purposes only.

| Fig. | Kacmaz No | Oem No | Oem Old No | Pcs. | Ürün Tanımı | Description | Sizes | Not | 714190 |
|---|---|---|---|---|---|---|---|---|---|
| 1 | | 960 261 0518 | | 1 | PRİZDİREK KEÇE KAPAĞI | COVER | | | ♦ |
| 1 | | 960 261 0218 | | 1 | PRİZDİREK KEÇE KAPAĞI | COVER | | | ♦ |
| 2 | K21.06637 | 019 997 8348 | (020 997 7948) | 1 | PRİZDİREK KEÇE KAPAK ORİNGİ | O-RING | 14X4mm | | ♦ |
| 3 | K21.06636 | 015 997 4048 | (020 997 8748) | 1 | PRİZDİREK KEÇE KAPAK ORİNGİ | O-RING | 5X3mm | | ♦ |
| 4 | | 023 997 7748 | | 1 | PRİZDİREK KEÇE KAPAK ORİNGİ | O-RING | 13,1X2mm | | ♦ |
| 5 | K21.03509 | 019 997 0547 | (023 997 7847) | 1 | PRİZDİREK KEÇESİ | OIL SEAL | 56X72X8mm | | ♦ |
| | | | (019 997 0647) | | | | | | |
| | | | (022 997 8547) | | | | | | |
| 6 | K21.06038 | 389 261 0665 | (389 261 0765) | 1 | YAĞ TUTUCU DİSK | OIL BAFFLE | 75X16mm | | ♦ |
| | | | (389 261 0865) | | | | | | |
| 7 | K21.06635 | 020 997 7848 | | 1 | PRİZDİREK KEÇE KAPAK ORİNGİ | O-RING | 138X3mm | | ♦ |
| 8 | K21.04162 | 389 262 4152 | (389 262 0955) | 1 | PRİZDİREK AYAR RAYNELİ | THRUST WASHER | 0,10mm | | ♦ |
| 8 | K21.04243 | 389 262 0855 | | 1 | PRİZDİREK AYAR RAYNELİ | THRUST WASHER | 0,15mm | | ♦ |
| 8 | K21.04151 | 389 262 0755 | | 1 | PRİZDİREK AYAR RAYNELİ | THRUST WASHER | 0,20mm | | ♦ |
| 8 | K21.06715 | 389 262 3055 | | 1 | PRİZDİREK AYAR RAYNELİ | THRUST WASHER | 0,25mm | | ♦ |
| 8 | K21.04221 | 389 262 3255 | | 1 | PRİZDİREK AYAR RAYNELİ | THRUST WASHER | 0,31mm | | ♦ |
| 8 | K21.04163 | 389 262 3555 | (389 262 0655) | 1 | PRİZDİREK AYAR RAYNELİ | THRUST WASHER | 0,40mm | | ♦ |
| | | | (389 262 4452) | | | | | | |
| 8 | K21.04164 | 389 262 3755 | (389 262 1954) | 1 | PRİZDİREK AYAR RAYNELİ | THRUST WASHER | 0,46mm | | ♦ |
| 8 | K21.04246 | 389 262 3855 | | 1 | PRİZDİREK AYAR RAYNELİ | THRUST WASHER | 0,49mm | | ♦ |
| 8 | K21.04250 | 389 262 4055 | (389 262 0155) | 1 | PRİZDİREK AYAR RAYNELİ | THRUST WASHER | 0,55mm | | ♦ |
| | | | (389 262 2154) | | | | | | |
| 8 | K21.04167 | 389 262 4255 | (389 262 2254) | 1 | PRİZDİREK AYAR RAYNELİ | THRUST WASHER | 0,61mm | | ♦ |
| 8 | K21.04168 | 389 262 4355 | (389 262 2354) | 1 | PRİZDİREK AYAR RAYNELİ | THRUST WASHER | 0,64mm | | ♦ |
| 8 | K21.04169 | 389 262 4555 | (389 262 2454) | 1 | PRİZDİREK AYAR RAYNELİ | THRUST WASHER | 0,70mm | | ♦ |
| 8 | K21.04170 | 389 262 4755 | (389 262 2554) | 1 | PRİZDİREK AYAR RAYNELİ | THRUST WASHER | 0,76mm | | ♦ |
| 8 | K21.04281 | 389 262 4855 | (389 262 0555) | 1 | PRİZDİREK AYAR RAYNELİ | THRUST WASHER | 0,79mm | | ♦ |
| 8 | K21.04282 | 389 262 5555 | | 1 | PRİZDİREK AYAR RAYNELİ | THRUST WASHER | 1,00mm | | ♦ |
| 8 | K21.04171 | 389 262 9654 | (389 262 2654) | 1 | PRİZDİREK AYAR RAYNELİ | THRUST WASHER | 2,00mm | | ♦ |
| 9 | K21.07027 | 960 260 0058 | | 1 | HAVALANDIRMA TAMİR TAKIMI | REPAIR KIT | | | ♦ |
| 10 | K21.06949 | 960 261 4133 | | 1 | GRUP DURDURUCU KAPAĞI | COVER | | | ♦ |
| 11 | K21.06636 | 015 997 4048 | (020 997 8748) | 1 | GRUP DURDURUCU PİSTON ORİNGİ | O-RING | 5X3mm | | ♦ |
| 12 | K21.06967 | 960 260 3418 | | 1 | GRUP DURDURUCU KAPAK PİSTONU | PISTON | | | ♦ |
| 13 | K21.06431 | 960 262 0291 | (960 262 0191) | 1 | KAVRAMA HALKA SETİ | PARTS KIT | | | ♦ |
| | | | (960 262 0091) | | | | | | |
| | | | (947 260 4036) | | | | | | |
| 14 | K21.06730 | 970 994 3541 | (000472 100000) | 1 | GRUP DURDURUCU KİLİT SEKMANI | RETAINING RING | 3,00mm | | ♦ |
| 15 | K21.06533 | 028 997 2348 | (004 997 2248) | 1 | GRUP DURDURUCU KAPAK ORİNGİ | O-RING | 100X3mm | | ♦ |
| 16 | K21.04192 | 406 337 0252 | | 1 | GRUP MİLİ ÖN BİLYA RAYNELİ | THRUST WASHER | 0,10mm | | ♦ |
| 16 | K21.04150 | 406 337 0352 | | 1 | GRUP MİLİ ÖN BİLYA RAYNELİ | THRUST WASHER | 0,20mm | | ♦ |
| 16 | K21.94150 | | | 1 | GRUP MİLİ ÖN BİLYA RAYNELİ | THRUST WASHER | 0,25mm | | ♦ |
| 16 | K21.04338 | 406 337 0452 | | 1 | GRUP MİLİ ÖN BİLYA RAYNELİ | THRUST WASHER | 0,30mm | | ♦ |
| 16 | K21.04196 | 389 263 5352 | (389 263 3252) | 1 | GRUP MİLİ ÖN BİLYA RAYNELİ | THRUST WASHER | 0,40mm | | ♦ |
| 16 | K21.04194 | 389 263 3352 | | 1 | GRUP MİLİ ÖN BİLYA RAYNELİ | THRUST WASHER | 0,45mm | | ♦ |
| 16 | K21.06719 | 389 263 5652 | | 1 | GRUP MİLİ ÖN BİLYA RAYNELİ | THRUST WASHER | 0,49mm | | ♦ |
| 16 | K21.04197 | 389 263 5852 | (389 263 3552) | 1 | GRUP MİLİ ÖN BİLYA RAYNELİ | THRUST WASHER | 0,55mm | | ♦ |
| 16 | K21.04340 | 389 263 6052 | | 1 | GRUP MİLİ ÖN BİLYA RAYNELİ | THRUST WASHER | 0,61mm | | ♦ |
| 16 | K21.04198 | 389 263 6352 | (389 263 3852) | 1 | GRUP MİLİ ÖN BİLYA RAYNELİ | THRUST WASHER | 0,70mm | | ♦ |
| 16 | K21.04154 | 389 263 3952 | | 1 | GRUP MİLİ ÖN BİLYA RAYNELİ | THRUST WASHER | 0,75mm | | ♦ |
| 16 | K21.04199 | 389 263 6852 | | 1 | GRUP MİLİ ÖN BİLYA RAYNELİ | THRUST WASHER | 0,85mm | | ♦ |
| 16 | K21.04200 | 389 263 7352 | | 1 | GRUP MİLİ ÖN BİLYA RAYNELİ | THRUST WASHER | 1,00mm | | ♦ |
| 16 | K21.04201 | 389 263 7852 | | 1 | GRUP MİLİ ÖN BİLYA RAYNELİ | THRUST WASHER | 1,15mm | | ♦ |
| 16 | K21.04202 | 389 263 8352 | | 1 | GRUP MİLİ ÖN BİLYA RAYNELİ | THRUST WASHER | 1,30mm | | ♦ |

NOTES :

NOTLAR :





Original parts names, oem numbers, symbols and descriptions used in this catalogue are for reference purposes only.

# GEARBOX GO 250-8 / 6,57 - 0,63

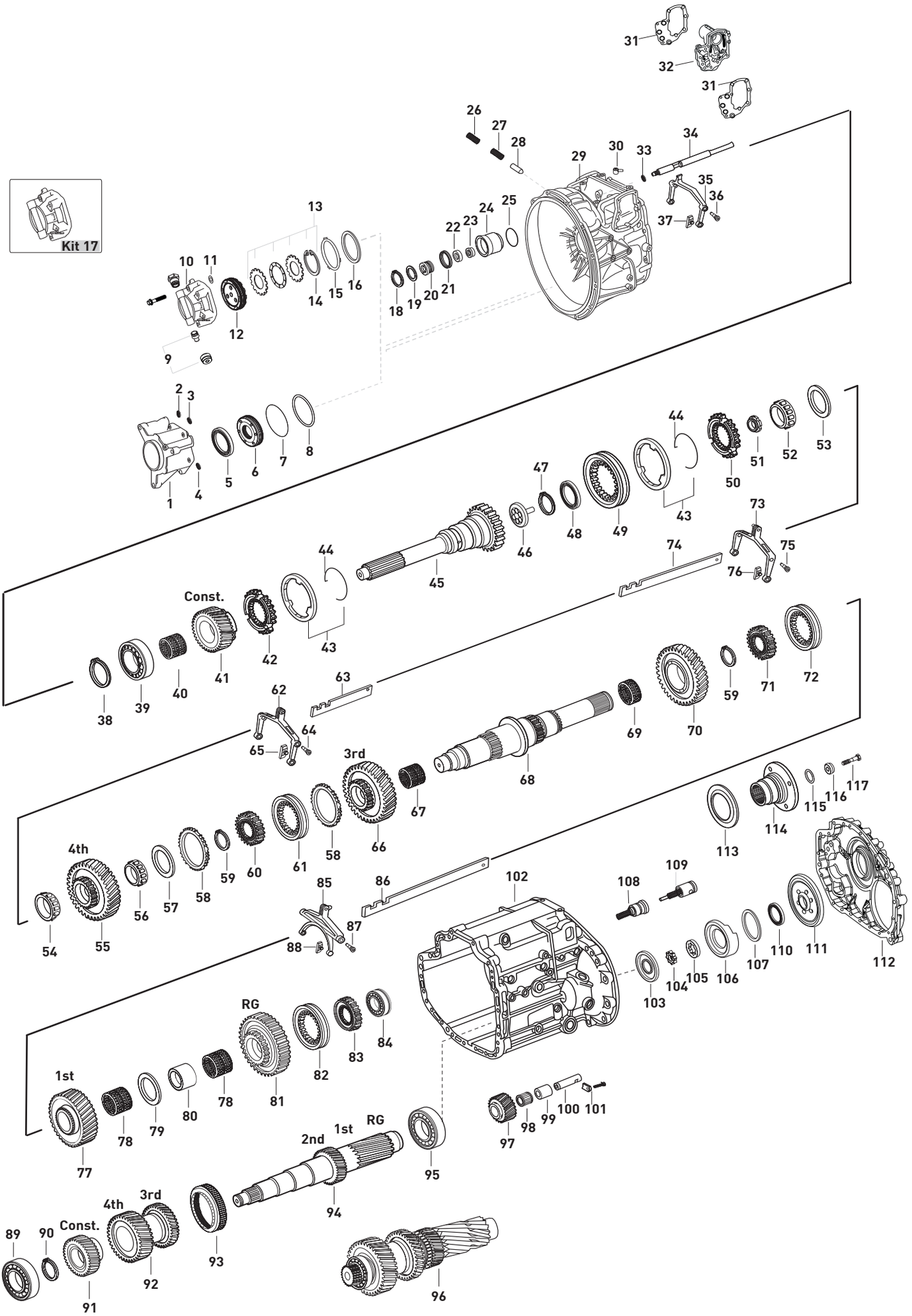




Original parts names, oem numbers, symbols and descriptions used in this catalogue are for reference purposes only.

| Fig. | Kacmaz No | Oem No | Oem Old No | Pcs. | Ürün Tanımı | Description | Sizes | Not | 714190 |
|---|---|---|---|---|---|---|---|---|---|
| 17 | K21.06948 | 960 260 5965 | (960 260 4865) | 1 | GRUP DURDURUCU KAPAĞI KOMPLE | REPAIR KIT | | | ♦ |
| 18 | | 006 994 4241 | (000472 065001) | 1 | TAKVİYE PİSTON SEKMANI | RETAINING RING | 65X2,5mm | | ♦ |
| 19 | K21.04233 | 389 262 2555 | | 1 | TAKVİYE SİLİNDİR PULU | SPACER WASHER | 0,70mm | | ♦ |
| 19 | K21.04234 | 389 262 2655 | | 1 | TAKVİYE SİLİNDİR PULU | SPACER WASHER | 0,90mm | | ♦ |
| 19 | K21.04112 | 389 262 3254 | | 1 | TAKVİYE SİLİNDİR PULU | SPACER WASHER | 1,05mm | | ♦ |
| 19 | K21.04111 | 389 262 3354 | | 1 | TAKVİYE SİLİNDİR PULU | SPACER WASHER | 1,10mm | | ♦ |
| 19 | K21.04109 | 389 262 3554 | | 1 | TAKVİYE SİLİNDİR PULU | SPACER WASHER | 1,20mm | | ♦ |
| 19 | K21.04105 | 389 262 2052 | | 1 | TAKVİYE SİLİNDİR PULU | SPACER WASHER | 1,40mm | | ♦ |
| 19 | K21.04093 | 389 262 2355 | | 1 | TAKVİYE SİLİNDİR PULU | SPACER WASHER | 1,79mm | | ♦ |
| 19 | K21.04025 | 389 262 3252 | | 1 | TAKVİYE SİLİNDİR PULU | SPACER WASHER | 2,00mm | | ♦ |
| 19 | K21.04024 | 389 262 3352 | | 1 | TAKVİYE SİLİNDİR PULU | SPACER WASHER | 2,50mm | | ♦ |
| 20 | K21.06994 | 945 267 0218 | (387 267 0918) | 1 | TAKVİYE MİL PİSTONU | PISTON | | | ♦ |
| | | | (387 267 0618) | | | | | | |
| 21 | K21.03524 | 006 997 6447 | (020 997 6647) | 1 | TAKVİYE HAVA KEÇESİ | OIL SEAL | 41X48X11,5mm | | ♦ |
| | | | (012 997 3347) | | | | | | |
| 22 | K21.04178 | 387 267 0650 | (387 267 0250) | 1 | TAKVİYE SİLİNDİR BURCU | BUSHING | 34X22X8mm | | ♦ |
| 23 | K21.03523 | 000 267 0197 | (000 267 0397) | 1 | TAKVİYE HİLAL MİL KEÇESİ | OIL SEAL | 22X32X8mm | | ♦ |
| 24 | K21.06036 | 945 267 0819 | (945 267 0119) | 1 | TAKVİYE SİLİNDİR GÖVDESİ | CYLINDER | | | ♦ |
| | | | (945 267 0719) | | | | | | |
| | | | (945 267 0019) | | | | | | |
| 25 | K21.06534 | 022 997 4248 | | 1 | TAKVİYE SİLİNDİR ORİNGİ | O-RING | 55,6X3mm | | ♦ |
| 26 | K21.06015 | 387 993 4501 | | 1 | ŞANZ.TAKVİYE KİLİT FİŞEK YAYI | SPRING | 6,2X63mm | | ♦ |
| 27 | K21.03500 | 387 993 4401 | (387 993 2501) | 1 | KİLİT YAYI | SPRING | 9,8X63,3mm | | ♦ |
| 28 | K21.03492 | 389 267 1174 | (387 267 0074) | 1 | KİLİT FİŞEĞİ | PIN | | | ♦ |
| 29 | | 960 260 7811 | | 1 | ŞANZIMAN ÖN GÖVDE | HOUSING | | | ♦ |
| 30 | K21.06529 | 437 261 0082 | (945 261 0082) | 1 | ŞANZIMAN HAVALANDIRMA | CAP | | | ♦ |
| 31 | | 960 261 0680 | | 2 | KULE CONTASI | GASKET | | | ♦ |
| 32 | | 960 260 1213 | | 1 | KULE KAPAĞI | COVER | | | ♦ |
| 33 | K21.04160 | 387 263 2652 | | 1 | TAKVİYE HİLAL MİL PULU | SPACER WASHER | 0,20mm | | ♦ |
| 33 | K21.04161 | 387 263 2752 | | 1 | TAKVİYE HİLAL MİL PULU | SPACER WASHER | 0,40mm | | ♦ |
| 33 | | 387 263 2852 | | 1 | TAKVİYE HİLAL MİL PULU | SPACER WASHER | 0,60mm | | ♦ |
| 33 | | 387 263 3052 | | 1 | TAKVİYE HİLAL MİL PULU | SPACER WASHER | 1,00mm | | ♦ |
| 34 | | 960 267 1817 | | 1 | TAKVİYE HİLAL MİLİ | G.SHIFT RAIL | | | ♦ |
| 35 | | 656 265 0801 | | 1 | TAKVİYE HİLALİ | GEAR SHIFT FORK | | | ♦ |
| 36 | K21.04307 | 960 265 0774 | (945 265 1274) | 2 | HİLAL CİVATASI | PIN | | | ♦ |
| | | | (945 265 2974) | | | | | | |
| | | | (945 265 2774) | | | | | | |
| 37 | K21.03431 | 960 265 0049 | (947 265 0349) | 2 | TAKVİYE HİLAL PABUCU | SLIDING PAD | | | ♦ |
| | | | (389 265 2749) | | | | | | |
| 38 | K21.04347 | 387 262 8673 | | 1 | PRİZDİREK ÖN BİLYA SEKMANI | RETAINING RING | 3,15mm | | ♦ |
| 38 | K21.04346 | 387 262 8773 | | 1 | PRİZDİREK ÖN BİLYA SEKMANI | RETAINING RING | 3,20mm | | ♦ |
| 38 | K21.07015 | 387 262 8873 | | 1 | PRİZDİREK ÖN BİLYA SEKMANI | RETAINING RING | 3,25mm | | ♦ |
| 38 | K21.04348 | 387 262 8973 | | 1 | PRİZDİREK ÖN BİLYA SEKMANI | RETAINING RING | 3,30mm | | ♦ |
| 38 | K21.07016 | 387 262 9073 | | 1 | PRİZDİREK ÖN BİLYA SEKMANI | RETAINING RING | 3,35mm | | ♦ |
| 38 | K21.04349 | 387 262 9173 | | 1 | PRİZDİREK ÖN BİLYA SEKMANI | RETAINING RING | 3,40mm | | ♦ |
| 38 | K21.07017 | 387 262 9273 | | 1 | PRİZDİREK ÖN BİLYA SEKMANI | RETAINING RING | 3,45mm | | ♦ |
| 38 | K21.04350 | 387 262 9373 | | 1 | PRİZDİREK ÖN BİLYA SEKMANI | RETAINING RING | 3,50mm | | ♦ |
| 39 | K21.03618 | 011 981 1305 | (014 981 9005) | 1 | PRİZDİREK ÖN BİLYA | ROLLER BEARING | 75X140X34,25mm | | ♦ |
| | | | (008 981 8605) | | | | | | |
| | | | (008 981 2605) | | | | | | |
| 40 | | 022 981 8710 | | 1 | TAKVİYE MASURA BİLYA | NEEDLE CAGE | | | ♦ |
| 41 | | 656 262 1010 | | 1 | TAKVİYE DİŞLİSİ 37 DİŞ | CONSTANT GEAR 37 T. | | | ♦ |
| 42 | | 656 262 1334 | (656 262 0734) | 1 | TAKVİYE SENKROMENÇ | ENGAGING RING | | | ♦ |

NOTES :

NOTLAR :





Original parts names, oem numbers, symbols and descriptions used in this catalogue are for reference purposes only.

# GEARBOX GO 250-8 / 6,57 - 0,63

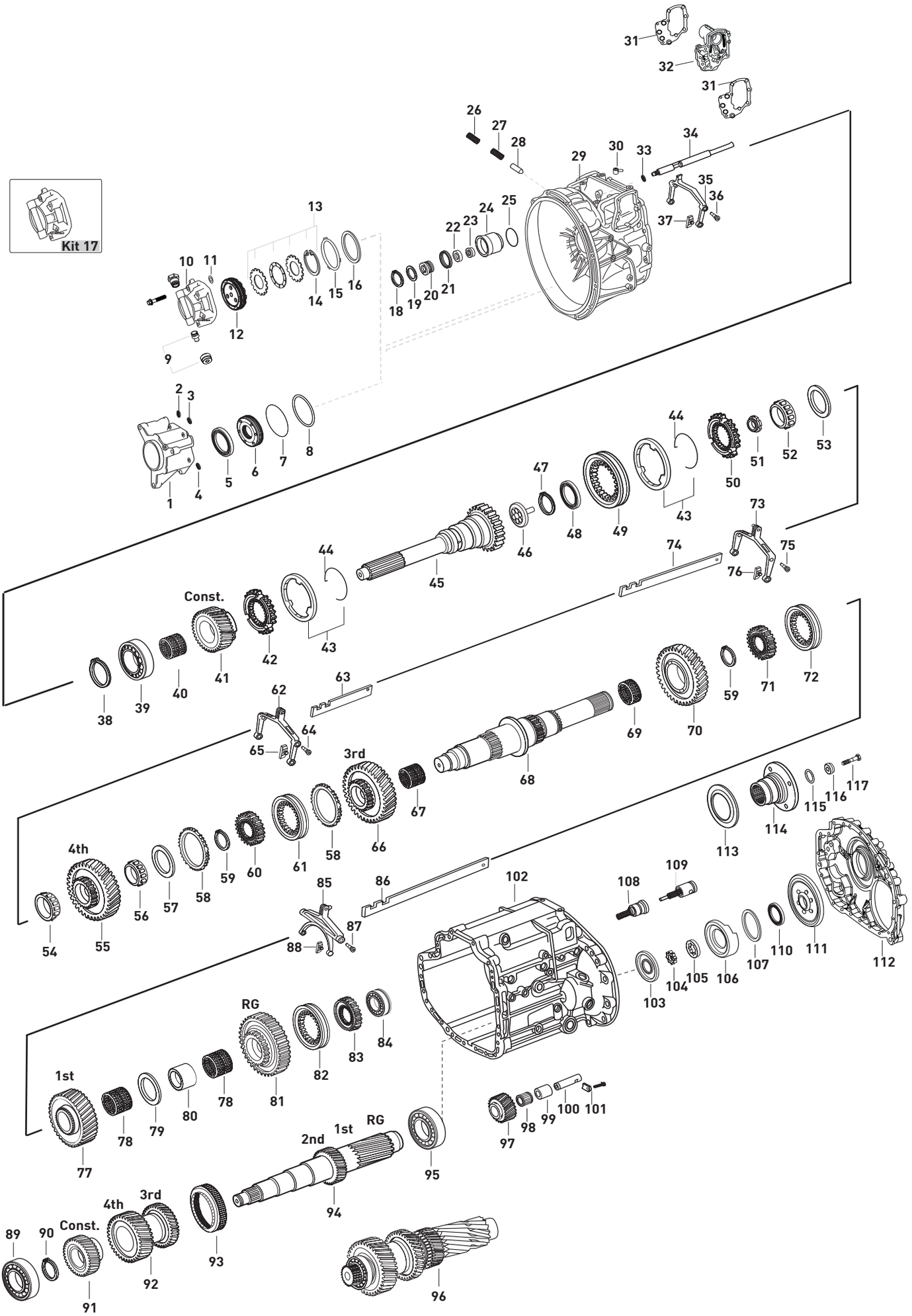




Original parts names, oem numbers, symbols and descriptions used in this catalogue are for reference purposes only.

| Fig. | Kacmaz No | Oem No | Oem Old No | Pcs. | Ürün Tanımı | Description | Sizes | Not | 714190 |
|---|---|---|---|---|---|---|---|---|---|
| 43 | K21.06299 | 947 260 3545 | (947 260 5145) | 2 | TAKVİYE FRENLEME (C) | SYNCHRONIZING CONE / C | | | ♦ |
| | | | (947 260 2945) | | | | | | |
| | | | (947 260 0745) | | | | | | |
| 44 | K21.03055 | 387 262 0893 | (387 262 0793) | 2 | FRENLEME TELİ | SPRING | | | ♦ |
| 45 | | 656 262 8182 | | 1 | PRİZDİREK 66 DİŞ | INPUT SHAFT 66 T. | | | ♦ |
| 46 | K21.04001 | 976 269 0034 | (960 269 0434) | 1 | PRİZDİREK YAĞ PİPETİ | OIL COLLECTOR | | | ♦ |
| 47 | K21.04002 | 000 994 9841 | | 1 | PRİZDİREK YAĞ PİPET SEKMANI | RETAINING RING | | | ♦ |
| 48 | K21.03510 | 001 262 0362 | (000 262 8762) | 1 | PRİZDİREK ARKA KEÇE | OIL SEAL | 78,5X105X7mm | | ♦ |
| | | | (000 262 9162) | | | | | | |
| 49 | K21.03151 | 945 262 6523 | (930 262 0523) | 1 | TAKVİYE HALKA | ENGAGING SLEEVE | | | ♦ |
| 50 | | 960 262 0934 | | 1 | TAKVİYE SENKROMENÇ | ENGAGING RING | | | ♦ |
| 51 | K21.03432 | 945 990 0250 | (945 990 0150) | 1 | KAMALI MİL SOMUNU | NUT | M30X1,5 | | ♦ |
| 52 | K21.03634 | 015 981 1705 | (014 981 8805) | 1 | KAMALI MİL UÇ BİLYA | ROLLER BEARING | 39,7X43,1mm | | ♦ |
| | | | (021 981 2205) | | | | | | |
| | | | (021 981 6105) | | | | | | |
| 53 | K21.04024 | 389 262 3352 | | 1 | KAMALI MİL AYAR PULU | THRUST WASHER | 2,50mm | | ♦ |
| 53 | K21.04025 | 389 262 3252 | | 1 | KAMALI MİL AYAR PULU | THRUST WASHER | 2,00mm | | ♦ |
| 53 | K21.04026 | 389 262 3152 | | 1 | KAMALI MİL AYAR PULU | THRUST WASHER | 1,95mm | | ♦ |
| 53 | K21.04027 | 389 262 3052 | | 1 | KAMALI MİL AYAR PULU | THRUST WASHER | 1,90mm | | ♦ |
| 53 | K21.04028 | 389 262 2952 | | 1 | KAMALI MİL AYAR PULU | THRUST WASHER | 1,85mm | | ♦ |
| 53 | K21.04092 | 389 262 2455 | | 1 | KAMALI MİL AYAR PULU | THRUST WASHER | 1,82mm | | ♦ |
| 53 | K21.04093 | 389 262 2355 | | 1 | KAMALI MİL AYAR PULU | THRUST WASHER | 1,79mm | | ♦ |
| 53 | K21.04094 | 389 262 2255 | | 1 | KAMALI MİL AYAR PULU | THRUST WASHER | 1,76mm | | ♦ |
| 53 | K21.04095 | 389 262 2155 | | 1 | KAMALI MİL AYAR PULU | THRUST WASHER | 1,73mm | | ♦ |
| 53 | K21.04096 | 389 262 2055 | | 1 | KAMALI MİL AYAR PULU | THRUST WASHER | 1,67mm | | ♦ |
| 53 | K21.04097 | 389 262 1955 | | 1 | KAMALI MİL AYAR PULU | THRUST WASHER | 1,64mm | | ♦ |
| 53 | K21.04098 | 389 262 1855 | | 1 | KAMALI MİL AYAR PULU | THRUST WASHER | 1,61mm | | ♦ |
| 53 | K21.04099 | 389 262 1755 | | 1 | KAMALI MİL AYAR PULU | THRUST WASHER | 1,58mm | | ♦ |
| 53 | K21.04100 | 389 262 2352 | | 1 | KAMALI MİL AYAR PULU | THRUST WASHER | 1,55mm | | ♦ |
| 53 | K21.04101 | 389 262 1655 | | 1 | KAMALI MİL AYAR PULU | THRUST WASHER | 1,52mm | | ♦ |
| 53 | K21.04102 | 389 262 1555 | | 1 | KAMALI MİL AYAR PULU | THRUST WASHER | 1,49mm | | ♦ |
| 53 | K21.04103 | 389 262 1455 | | 1 | KAMALI MİL AYAR PULU | THRUST WASHER | 1,46mm | | ♦ |
| 53 | K21.04104 | 389 262 1355 | | 1 | KAMALI MİL AYAR PULU | THRUST WASHER | 1,43mm | | ♦ |
| 53 | K21.04105 | 389 262 2052 | | 1 | KAMALI MİL AYAR PULU | THRUST WASHER | 1,40mm | | ♦ |
| 53 | K21.04106 | 389 262 1952 | | 1 | KAMALI MİL AYAR PULU | THRUST WASHER | 1,35mm | | ♦ |
| 53 | K21.04107 | 389 262 2754 | | 1 | KAMALI MİL AYAR PULU | THRUST WASHER | 1,30mm | | ♦ |
| 53 | K21.04108 | 389 262 3654 | | 1 | KAMALI MİL AYAR PULU | THRUST WASHER | 1,25mm | | ♦ |
| 53 | K21.04109 | 389 262 3554 | | 1 | KAMALI MİL AYAR PULU | THRUST WASHER | 1,20mm | | ♦ |
| 53 | K21.04110 | 389 262 3454 | | 1 | KAMALI MİL AYAR PULU | THRUST WASHER | 1,15mm | | ♦ |
| 53 | K21.04111 | 389 262 3354 | | 1 | KAMALI MİL AYAR PULU | THRUST WASHER | 1,10mm | | ♦ |
| 53 | K21.04112 | 389 262 3254 | | 1 | KAMALI MİL AYAR PULU | THRUST WASHER | 1,05mm | | ♦ |
| 53 | K21.04113 | 389 262 2854 | | 1 | KAMALI MİL AYAR PULU | THRUST WASHER | 0,50mm | | ♦ |
| 53 | K21.94113 | | | 1 | KAMALI MİL AYAR PULU | THRUST WASHER | 0,40mm | | ♦ |
| 53 | K21.84113 | | | 1 | KAMALI MİL AYAR PULU | THRUST WASHER | 0,30mm | | ♦ |
| 53 | K21.74113 | | | 1 | KAMALI MİL AYAR PULU | THRUST WASHER | 0,20mm | | ♦ |
| 53 | K21.64113 | | | 1 | KAMALI MİL AYAR PULU | THRUST WASHER | 0,10mm | | ♦ |
| 54 | K21.03629 | 015 981 7605 | (015 981 2005) | 1 | 4.VİTES DİŞLİSİ ÖN BİLYA | ROLLER BEARING | 50X41mm | | ♦ |
| | | | (011 981 4705) | | | | | | |
| | | | (011 981 5305) | | | | | | |
| 55 | | 656 262 0910 | | 1 | 4.VİTES DİŞLİSİ 24 DİŞ | GEAR 4th 24 T. | | | ♦ |
| 56 | K21.03636 | 017 981 8305 | | 1 | 4.VİTES DİŞLİSİ ARKA BİLYA | ROLLER BEARING | 52X24mm | | ♦ |
| 57 | | 656 262 0055 | | 1 | SENKROMENÇ PULU | WASHER | | | ♦ |
| 58 | | 656 262 0334 | | 2 | 3./4.VİTES SENKROMENÇ | SYNCHRONIZING CONE | | | ♦ |

NOTES :

NOTLAR :





Original parts names, oem numbers, symbols and descriptions used in this catalogue are for reference purposes only.

# GEARBOX GO 250-8 / 6,57 - 0,63

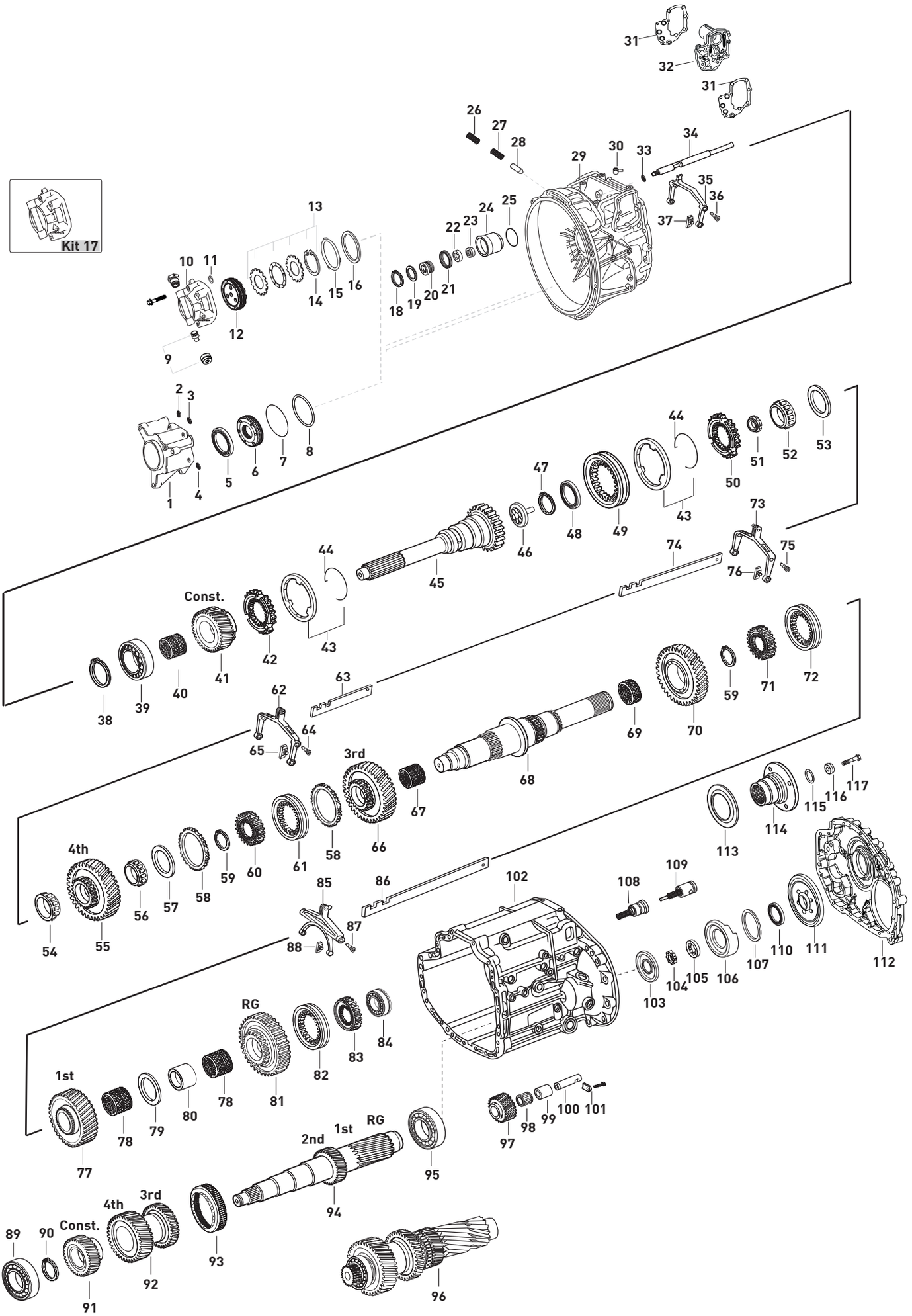




Original parts names, oem numbers, symbols and descriptions used in this catalogue are for reference purposes only.

| Fig. | Kacmaz No | Oem No | Oem Old No | Pcs. | Ürün Tanımı | Description | Sizes | Not | 714190 |
|---|---|---|---|---|---|---|---|---|---|
| 59 | K21.04336 | 387 262 0473 | | 2 | 1./2./3./4.VİTES YILDIZ DİŞLİ SEKMANI | RETAINING RING | 2,40mm | | ♦ |
| 59 | K21.07018 | 387 262 0573 | | 2 | 1./2./3./4.VİTES YILDIZ DİŞLİ SEKMANI | RETAINING RING | 2,45mm | | ♦ |
| 59 | K21.04352 | 387 262 0673 | | 2 | 1./2./3./4.VİTES YILDIZ DİŞLİ SEKMANI | RETAINING RING | 2,50mm | | ♦ |
| 59 | K21.07019 | 387 262 0773 | | 2 | 1./2./3./4.VİTES YILDIZ DİŞLİ SEKMANI | RETAINING RING | 2,55mm | | ♦ |
| 59 | K21.04337 | 387 262 0873 | | 2 | 1./2./3./4.VİTES YILDIZ DİŞLİ SEKMANI | RETAINING RING | 2,60mm | | ♦ |
| 59 | K21.06929 | 387 262 0973 | | 2 | 1./2./3./4.VİTES YILDIZ DİŞLİ SEKMANI | RETAINING RING | 2,65mm | | ♦ |
| 59 | K21.06669 | 387 262 7673 | | 2 | 1./2./3./4.VİTES YILDIZ DİŞLİ SEKMANI | RETAINING RING | 2,70mm | | ♦ |
| 59 | K21.06930 | 387 262 7873 | | 2 | 1./2./3./4.VİTES YILDIZ DİŞLİ SEKMANI | RETAINING RING | 2,80mm | | ♦ |
| 59 | K21.06928 | 387 262 4173 | | 2 | 1./2./3./4.VİTES YILDIZ DİŞLİ SEKMANI | RETAINING RING | 2,90mm | | ♦ |
| 59 | K21.06906 | 387 262 4373 | | 2 | 1./2./3./4.VİTES YILDIZ DİŞLİ SEKMANI | RETAINING RING | 3,00mm | | ♦ |
| 59 | K21.06922 | 387 262 4573 | | 2 | 1./2./3./4.VİTES YILDIZ DİŞLİ SEKMANI | RETAINING RING | 3,10mm | | ♦ |
| 59 | K21.06918 | 387 262 9773 | | 2 | 1./2./3./4.VİTES YILDIZ DİŞLİ SEKMANI | RETAINING RING | 3,20mm | | ♦ |
| 60 | | 656 262 1335 | (656 262 0135) | 1 | 3./4.VİTES YILDIZ DİŞLİ | SYNCHRONIZER HUB | | | ♦ |
| | | | (656 262 0835) | | | | | | |
| 61 | | 656 262 1123 | (656 262 0023) | 1 | 3./4.VİTES HALKA | ENGAGING SLEEVE | | | ♦ |
| | | | (656 262 0423) | | | | | | |
| 62 | | 656 260 0630 | | 1 | 3./4.VİTES HİLALİ | SHIFTING FORK | | | ♦ |
| 63 | | 656 265 1104 | | 1 | 3./4.VİTES HİLAL ÇITASI | SHIFTING ROD | | | ♦ |
| 64 | K21.04307 | 960 265 0774 | (945 265 1274) | 2 | HİLAL CİVATASI | PIN | | | ♦ |
| | | | (945 265 2974) | | | | | | |
| | | | (945 265 2774) | | | | | | |
| 65 | K21.03565 | 947 265 0449 | | 2 | 3./4.VİTES HİLAL PABUCU | SLIDING PAD | | | ♦ |
| 66 | | 656 262 0117 | (656 262 0917) | 1 | 3.VİTES DİŞLİSİ 25 DİŞ | GEAR 3rd 25 T. | | | ♦ |
| 67 | K21.03823 | 019 981 9210 | (023 981 1210) | 1 | 3.VİTES MASURA BİLYA | NEEDLE CAGE | 78X86X48mm | | ♦ |
| | | | (023 981 5110) | | | | | | |
| 68 | | 656 262 0705 | | 1 | KAMALI MİL | MAIN SHAFT | | | ♦ |
| 69 | K21.03845 | 008 981 8610 | (007 981 5510) | 1 | 2.VİTES MASURA BİLYA | NEEDLE CAGE | 92X100X49,5mm | | ♦ |
| | | | (019 981 3410) | | | | | | |
| | | | (018 981 7910) | | | | | | |
| 70 | | 656 262 0212 | | 1 | 2.VİTES DİŞLİSİ 37 DİŞ | GEAR 2nd 37 T. | | | ♦ |
| 71 | | 656 262 1035 | (656 262 0035) | 1 | 3./4.VİTES YILDIZ DİŞLİ | SYNCHRONIZER HUB | | | ♦ |
| | | | (656 262 0535) | | | | | | |
| | | | (656 262 0735) | | | | | | |
| 72 | | 656 262 1123 | (656 262 0023) | 1 | 1./2.VİTES HALKA | ENGAGING SLEEVE | | | ♦ |
| | | | (656 262 0423) | | | | | | |
| 73 | | 656 260 0430 | | 1 | 1./2.VİTES HİLALİ | SHIFTING FORK | | | ♦ |
| 74 | | 656 265 1204 | | 1 | 1./2.VİTES HİLAL ÇITASI | SHIFTING ROD | | | ♦ |
| 75 | K21.04307 | 960 265 0774 | (945 265 1274) | 2 | HİLAL CİVATASI | PIN | | | ♦ |
| | | | (945 265 2974) | | | | | | |
| | | | (945 265 2774) | | | | | | |
| 76 | K21.03565 | 947 265 0449 | | 2 | 1./2.VİTES HİLAL PABUCU | SLIDING PAD | | | ♦ |
| 77 | | 656 262 0111 | | 1 | 1.VİTES DİŞLİSİ 50 DİŞ | GEAR 1st 50 T. | | | ♦ |
| 78 | K21.03859 | 023 981 5210 | (022 981 5810) | 2 | 1./ GERİ VİTES MASURA BİLYA | NEDDLE CAGE | 85X93X60mm | | ♦ |
| | | | (022 981 8510) | | | | | | |
| | | | (022 981 5410) | | | | | | |
| 79 | K21.04284 | 389 262 2855 | | 1 | 1.VİTES MESAFE AYAR PULU | THRUST WASHER | 5,50mm | | ♦ |
| 80 | | 656 262 0050 | | 1 | GERİ VİTES BURCU | BEARING RACE | | | ♦ |
| 81 | | 656 262 0333 | | 1 | GERİ VİTES DİŞLİSİ 47 DİŞ | REVERSE GEAR 47 T. | | | ♦ |
| 82 | | 656 262 0823 | (656 262 0323) | 1 | GERİ VİTES HALKASI | ENGAGING SLEEVE | | | ♦ |
| | | | (656 262 0523) | | | | | | |
| 83 | | 656 262 0235 | | 1 | GERİ VİTES YILDIZ DİŞLİ | SYNCHRONIZER HUB | | | ♦ |
| 84 | K21.03658 | 012 981 3705 | (018 981 6705) | 1 | KAMALI MİL ARKA BİLYA | ROLLER BEARING | 65X140X13,5mm | | ♦ |
| 85 | | 656 260 0530 | | 1 | GERİ VİTES HİLALİ | SHIFTING FORK | | | ♦ |

NOTES :

NOTLAR :





Original parts names, oem numbers, symbols and descriptions used in this catalogue are for reference purposes only.

# GEARBOX GO 250-8 / 6,57 - 0,63

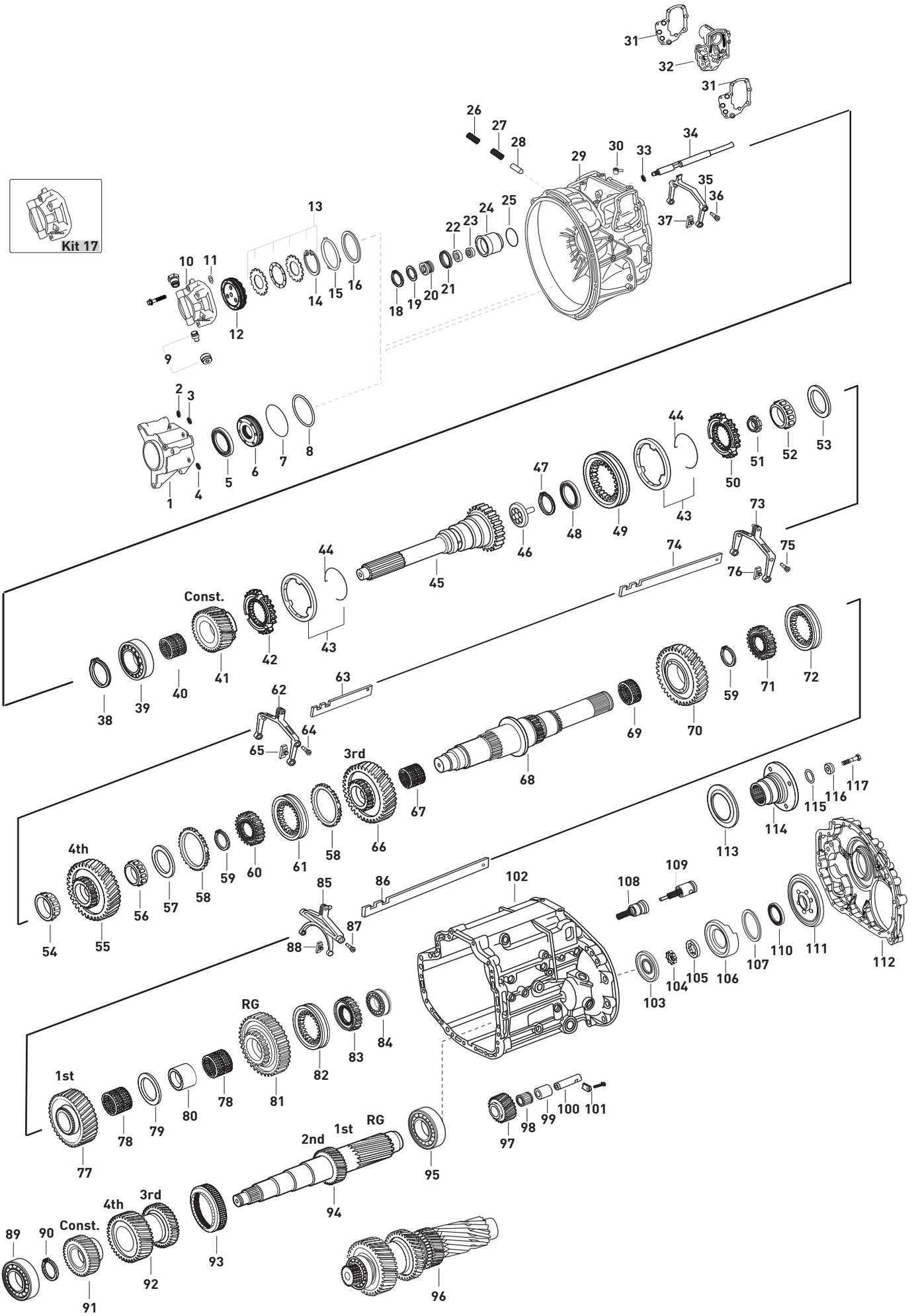




Original parts names, oem numbers, symbols and descriptions used in this catalogue are for reference purposes only.

| Fig. | Kacmaz No | Oem No | Oem Old No | Pcs. | Ürün Tanımı | Description | Sizes | Not | 714190 |
|---|---|---|---|---|---|---|---|---|---|
| 86 | | 656 265 1304 | | 1 | GERİ VİTES HİLAL ÇITASI | SHIFTING ROD | | | ♦ |
| 87 | K21.04307 | 960 265 0774 | (945 265 1274) | 2 | GERİ VİTES HİLAL CİVATASI | PIN | | | ♦ |
| | | | (945 265 2974) | | | | | | |
| | | | (945 265 2774) | | | | | | |
| 88 | K21.03410 | 947 265 0249 | (945 265 0149) | 2 | GERİ VİTES HİLAL PABUCU | SLIDING PAD | | | ♦ |
| 89 | | 019 981 6005 | (012 981 7305) | 1 | GRUP MİLİ ÖN BİLYA | ROLLER BEARING | 50,8X100X46,04mm | | ♦ |
| | | | (012 981 9605) | | | | | | |
| | | | (013 981 5605) | | | | | | |
| 90 | K21.06426 | 900055 060300 | (000 264 5351) | 1 | GRUP MİLİ ÖN BİLYA SEKMANI | RETAINING RING | 3,00mm | | ♦ |
| 91 | | 656 263 0810 | (656 263 0610) | 1 | TAKVİYE DİŞLİ KARŞILIĞI 40 DİŞ | CONSTANT GEAR 40 T | | | ♦ |
| 92 | | 656 263 0410 | | 1 | 3./4.VİT.DİŞLİ KARŞILIĞI 34/41 DİŞ | DOUB.GEAR 3rd/4th 34/41 T | | | ♦ |
| 93 | | 656 263 0028 | | 1 | GRUP OKUYUCU SENSÖR | PULSE DISK | | | ♦ |
| 94 | | 656 263 0202 | (656 263 0102) | 1 | GRUP MİLİ 13/23 DİŞ | COUNTER SHAFT 13/23 T | | | ♦ |
| 95 | K21.03660 | 012 981 3605 | (015 981 4105) | 1 | GRUP MİLİ ARKA BİLYA | ROLLER BEARING | 45X110X12mm | | ♦ |
| 96 | | 656 260 0624 | | 1 | GRUP MİLİ KOMPLE | COUNTER SHAFT COMPLETE | | | ♦ |
| 97 | | 656 263 0331 | | 1 | KÜÇÜK GERİ VİTES | REV.IDLER GEAR | | | ♦ |
| 98 | | 015 981 4110 | (019 981 0510) | 1 | KÜÇÜK GERİ VİTES MASURA BİLYA | NEEDLE BEARING | 48X60X31mm | | ♦ |
| 99 | K21.06146 | 389 263 0650 | | 1 | K.GERİ VİTES MASURA BİLYA ÇANAĞI | BUSHING | 63,10mm | | ♦ |
| 100 | K21.06148 | 976 263 0330 | (389 263 0730) | 1 | KÜÇÜK GERİ VİTES PİMİ | PIN | | | ♦ |
| 101 | | 976 263 0041 | | 1 | KÜÇÜK GERİ VİTES PİM TUTUCU | PIN | | | ♦ |
| 102 | | 389 261 5529 | | 1 | ŞANZIMAN ORTA GÖVDE | HOUSING | | | ♦ |
| 103 | K21.03458 | 389 269 2001 | (389 269 1901) | 1 | YAĞ POMPA KAPAĞI | OIL PUMP COVER | | | ♦ |
| 104 | K21.03459 | 389 269 1606 | (389 269 1706) | 1 | YAĞ POMPA İÇ ROTOR | OIL PUMP GEAR | | | ♦ |
| 105 | K21.03414 | 389 269 0706 | (389 269 1206) | 1 | YAĞ POMPA DIŞ ROTOR | ROTOR | | | ♦ |
| 106 | K21.06261 | 656 269 0001 | (629 269 0001) | 1 | YAĞ POMPA GÖVDESİ | OIL PUMP HOUSING | | | ♦ |
| 107 | K21.04289 | 389 263 1352 | | 1 | YAĞ POMPA AYAR RAYNELİ | THRUST WASHER | 0,10mm | | ♦ |
| 107 | K21.04290 | 389 263 1452 | | 1 | YAĞ POMPA AYAR RAYNELİ | THRUST WASHER | 0,15mm | | ♦ |
| 107 | K21.04291 | 389 263 1552 | | 1 | YAĞ POMPA AYAR RAYNELİ | THRUST WASHER | 0,25mm | | ♦ |
| 107 | K21.04292 | 389 263 1652 | | 1 | YAĞ POMPA AYAR RAYNELİ | THRUST WASHER | 0,30mm | | ♦ |
| 107 | K21.04293 | 389 263 1752 | | 1 | YAĞ POMPA AYAR RAYNELİ | THRUST WASHER | 0,50mm | | ♦ |
| 108 | K21.06953 | 960 260 1057 | | Kit | YAĞ BASINÇ VALFİ KOMPLE | VALVE KIT | | | ♦ |
| 109 | K21.06973 | 960 260 1257 | | Kit | YAĞ BASINÇ VALFİ KOMPLE | VALVE KIT | | | ♦ |
| 110 | K21.03519 | 023 997 8847 | (023 997 8547) | 1 | ŞANZIMAN ARKA KEÇE | OIL SEAL | 80x100x15,5mm | | ♦ |
| | | | (020 997 6447) | | | | | | |
| 111 | | 960 264 2420 | | 1 | RETARDER DİŞLİSİ | RETARDER GEAR | | | ♦ |
| 112 | | 656 261 0420 | | 1 | RETARDER GÖVDESİ | HOUSING | | | ♦ |
| 112 | | 656 261 0520 | | 1 | RETARDER GÖVDESİ | HOUSING | | | ♦ |
| 112 | | 656 261 1520 | | 1 | RETARDER GÖVDESİ | HOUSING | | | ♦ |
| 112 | | 656 261 1420 | | 1 | RETARDER GÖVDESİ | HOUSING | | | ♦ |
| 113 | K26.00392 | 942 356 0715 | (942 356 0315) | 1 | SENSÖR SACI | PULSE DISK | | | ♦ |
| 114 | | 629 262 0145 | | 1 | ŞANZIMAN FLANŞI | COMPANION FLANGE | 4-H, Ø180mm | | ♦ |
| 115 | K21.06990 | 027 997 3048 | (023 997 5548) | 1 | ŞANZIMAN FLANŞ ORİNGİ | O-RING | 56,52X5,33mm | | ♦ |
| | | | (023 997 6048) | | | | | | |
| 116 | | 976 262 0362 | | 1 | ŞANZ.FLANŞI ALIN PULU | THRUST WASHER | | | ♦ |
| 117 | K21.06280 | 000000 006750 | (000000 005728) | 1 | ŞANZ.FLANŞI ALIN VİDASI | SCREW | M20X1,5X80mm | | ♦ |

NOTES :

NOTLAR :





Original parts names, oem numbers, symbols and descriptions used in this catalogue are for reference purposes only.

# GEARBOX GO 170-6 / 8,2-1,0 & GO 190-6 / 8,2 - 1,0

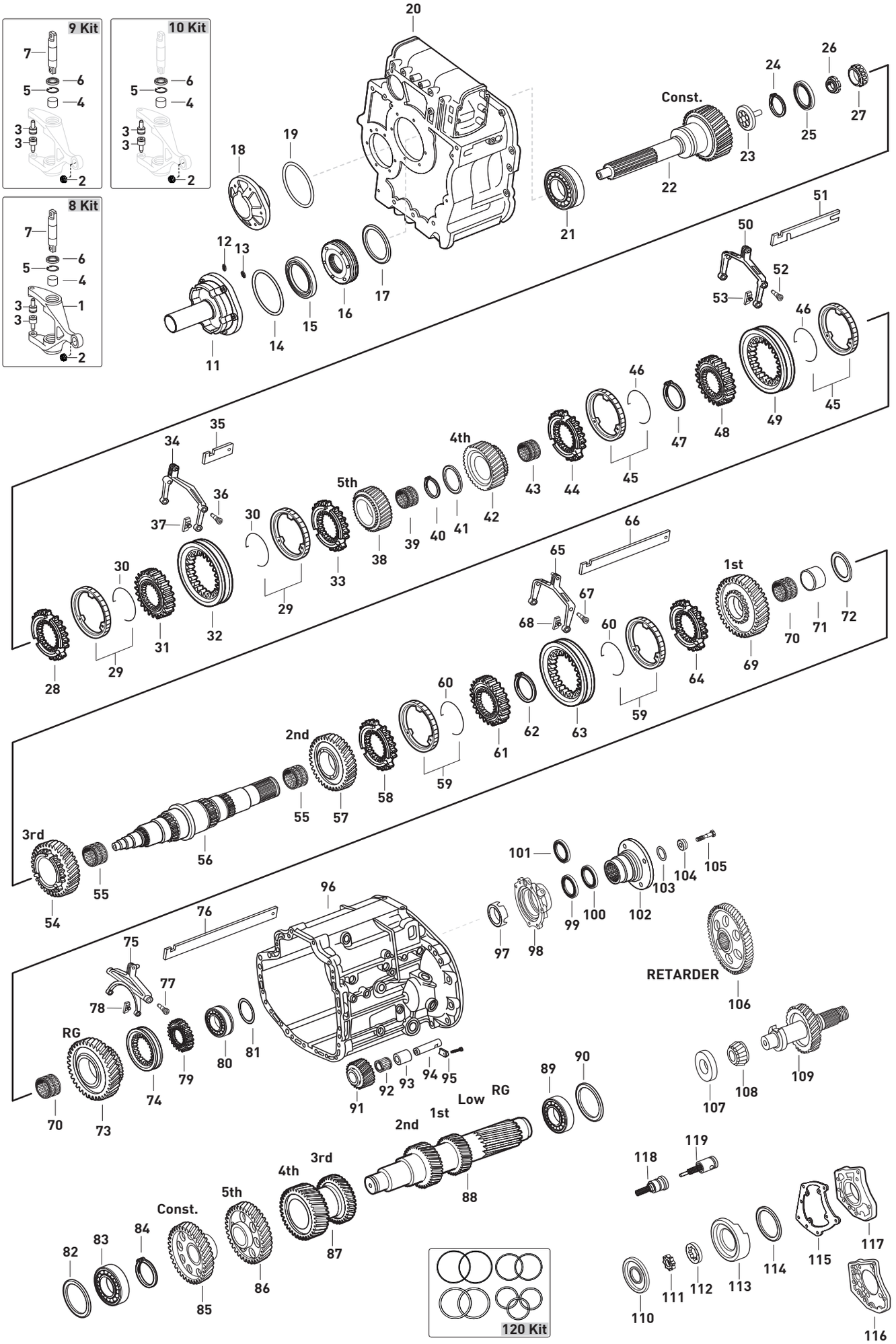




Original parts names, oem numbers, symbols and descriptions used in this catalogue are for reference purposes only.

| Fig. | Kacmaz No | Oem No | Oem Old No | Pcs. | Ürün Tanımı | Description | Sizes | Not | GO170-6/8.2-1 | GO190-6/8.2-1 |
|---|---|---|---|---|---|---|---|---|---|---|
| 1 | K21.07042 | 656 250 0613 | (656 250 0813) | kit | DEBRİYAJ ÇATALI BOŞ | RELEASE FORK EMPTY | | | ♦ | ♦ |
| 2 | K21.07040 | 000 254 0335 | | 1 | DEBRİYAJ ÇATAL PLASTİK TAPASI | PLASTIC BUSHING | | | ♦ | ♦ |
| 3 | K21.07038 | 000 254 0017 | | 2 | DEBRİYAJ ÇATAL BURÇ VE PİMİ | CAM ROLLER | | | ♦ | ♦ |
| 4 | | 002 992 9301 | | 2 | DEBRİYAJ ÇATAL MİL BURCU | BUSHING | | | ♦ | ♦ |
| 5 | | 912009 037200 | | 2 | DEBRİYAJ ÇATAL MİL SEKMANI | RETAINING RING | | | ♦ | ♦ |
| 6 | | 025 997 2347 | (025 997 2247) | 2 | DEBRİYAJ ÇATAL MİL KEÇESİ | OIL SEAL | | | ♦ | ♦ |
| 7 | | 656 254 0506 | (389 254 0006) | 1 | DEBRİYAJ ÇATAL MİLİ | SHAFT | | | ♦ | ♦ |
| 8 | K21.07041 | | | kit | DEBRİYAJ ÇATALI KOMPLE | RELEASE FORK COMPLETE | | | ♦ | ♦ |
| 9 | K21.07043 | | | kit | DEBRİYAJ ÇATALI TAMİR TAKIMI | RELEASE FORK REPAIR KIT | | | ♦ | ♦ |
| 10 | K21.07044 | | | kit | DEBRİYAJ ÇATALI TAMİR TK.MİLSİZ | RELEASE FORK REPAIR KIT | | W/OUT SHAFT | ♦ | ♦ |
| 11 | K21.06082 | 656 261 0018 | | 1 | PRİZDİREK KEÇE KAPAĞI | COVER | | | | ♦ |
| 11 | | 389 261 6618 | | 1 | PRİZDİREK KEÇE KAPAĞI | COVER | | | ♦ | ♦ |
| 11 | | 389 261 6218 | | 1 | PRİZDİREK KEÇE KAPAĞI | COVER | | | | ♦ |
| 12 | K21.06637 | 019 997 8348 | (020 997 7948) | 1 | PRİZDİREK KEÇE KAPAK ORİNGİ | O-RING | 14X4mm | | ♦ | ♦ |
| 13 | K21.06636 | 015 997 4048 | (020 997 8748) | 1 | PRİZDİREK KEÇE KAPAK ORİNGİ | O-RING | 5X3mm | | ♦ | ♦ |
| 14 | K21.06635 | 020 997 7848 | | 1 | PRİZDİREK KEÇE KAPAK ORİNGİ | O-RING | 138X3mm | | ♦ | ♦ |
| 15 | K21.03509 | 019 997 0547 | (023 997 7847) | 1 | PRİZDİREK KEÇESİ | OIL SEAL | 56X72X8mm | | ♦ | ♦ |
| | | | (019 997 0647) | | | | | | | |
| | | | (022 997 8547) | | | | | | | |
| 16 | K21.06038 | 389 261 0665 | (389 261 0765) | 1 | YAĞ TUTUCU DİSK | OIL BAFFLE | 75X16mm | | ♦ | ♦ |
| | | | (389 261 0865) | | | | | | | |
| 17 | K21.04162 | 389 262 4152 | (389 262 0955) | 1 | PRİZDİREK AYAR RAYNELİ | THRUST WASHER | 0,10mm | | ♦ | ♦ |
| 17 | K21.04243 | 389 262 0855 | | 1 | PRİZDİREK AYAR RAYNELİ | THRUST WASHER | 0,15mm | | ♦ | ♦ |
| 17 | K21.04151 | 389 262 0755 | | 1 | PRİZDİREK AYAR RAYNELİ | THRUST WASHER | 0,20mm | | ♦ | ♦ |
| 17 | K21.06715 | 389 262 3055 | | 1 | PRİZDİREK AYAR RAYNELİ | THRUST WASHER | 0,25mm | | ♦ | ♦ |
| 17 | K21.04221 | 389 262 3255 | | 1 | PRİZDİREK AYAR RAYNELİ | THRUST WASHER | 0,31mm | | ♦ | ♦ |
| 17 | K21.04163 | 389 262 3555 | (389 262 0655) | 1 | PRİZDİREK AYAR RAYNELİ | THRUST WASHER | 0,40mm | | ♦ | ♦ |
| | | | (389 262 4452) | | | | | | | |
| 17 | K21.04164 | 389 262 3755 | (389 262 1954) | 1 | PRİZDİREK AYAR RAYNELİ | THRUST WASHER | 0,46mm | | ♦ | ♦ |
| 17 | K21.04246 | 389 262 3855 | | 1 | PRİZDİREK AYAR RAYNELİ | THRUST WASHER | 0,49mm | | ♦ | ♦ |
| 17 | K21.04250 | 389 262 4055 | (389 262 0155) | 1 | PRİZDİREK AYAR RAYNELİ | THRUST WASHER | 0,55mm | | ♦ | ♦ |
| | | | (389 262 2154) | | | | | | | |
| 17 | K21.04167 | 389 262 4255 | (389 262 2254) | 1 | PRİZDİREK AYAR RAYNELİ | THRUST WASHER | 0,61mm | | ♦ | ♦ |
| 17 | K21.04168 | 389 262 4355 | (389 262 2354) | 1 | PRİZDİREK AYAR RAYNELİ | THRUST WASHER | 0,64mm | | ♦ | ♦ |
| 17 | K21.04169 | 389 262 4555 | (389 262 2454) | 1 | PRİZDİREK AYAR RAYNELİ | THRUST WASHER | 0,70mm | | ♦ | ♦ |
| 17 | K21.04170 | 389 262 4755 | (389 262 2554) | 1 | PRİZDİREK AYAR RAYNELİ | THRUST WASHER | 0,76mm | | ♦ | ♦ |
| 17 | K21.04281 | 389 262 4855 | (389 262 0555) | 1 | PRİZDİREK AYAR RAYNELİ | THRUST WASHER | 0,79mm | | ♦ | ♦ |
| 17 | K21.04282 | 389 262 5555 | | 1 | PRİZDİREK AYAR RAYNELİ | THRUST WASHER | 1,00mm | | ♦ | ♦ |
| 17 | K21.04171 | 389 262 9654 | (389 262 2654) | 1 | PRİZDİREK AYAR RAYNELİ | THRUST WASHER | 2,00mm | | ♦ | ♦ |
| 18 | | 389 261 1933 | (389 261 0633) | 1 | GRUP MİLİ ÖN BİLYA KAPAĞI | COVER | | (1) | ♦ | ♦ |
| | | | (389 262 0133) | | | | | | | |
| 18 | | 976 261 1833 | (976 261 1733) | 1 | GRUP MİLİ ÖN BİLYA KAPAĞI | COVER | | (2) | ♦ | ♦ |
| | | | (976 261 1633) | | | | | | | |
| 19 | | 022 997 4048 | (022 997 3448) | 1 | GRUP MİLİ BİLYA KAPAK ORİNGİ | O-RING | 103X2mm | (1) | ♦ | ♦ |
| 19 | K21.06533 | 028 997 2348 | (004 997 2248) | 1 | GRUP MİLİ BİLYA KAPAK ORİNGİ | O-RING | 100X3mm | (2) | ♦ | ♦ |
| 20 | | 389 261 0101 | | 1 | ŞANZIMAN ÖN GÖVDE | HOUSING | | | ♦ | ♦ |
| 20 | | 389 261 3101 | | 1 | ŞANZIMAN ÖN GÖVDE | HOUSING | | | ♦ | ♦ |
| 20 | | 389 261 4401 | | 1 | ŞANZIMAN ÖN GÖVDE | HOUSING | | | | ♦ |
| 20 | | 656 260 7112 | | 1 | ŞANZIMAN ÖN GÖVDE | HOUSING | | | | ♦ |
| 21 | K21.03618 | 011 981 1305 | (015 981 8405) | 1 | PRİZDİREK ÖN BİLYA | ROLLER BEARING | 75X140X34,25mm | | ♦ | ♦ |
| | | | (014 981 9005) | | | | | | | |
| | | | (008 981 2605) | | | | | | | |
| 22 | K21.06087 | 389 262 7902 | (389 262 7802) | 1 | PRİZDİREK 26 DİŞ | INPUT SHAFT 26 T. | | | | ♦ |
| 22 | K21.06088 | 656 262 6882 | (656 262 2882) | 1 | PRİZDİREK 26 DİŞ | INPUT SHAFT 26 T. | | | ♦ | ♦ |
| | | | (656 262 7002) | | | | | | | |

NOTES :
Parts encoded alphabetic and numaric are used together.

NOTLAR :
Alfabetik ve rakam ile kodlanan parçalar birlikte kullanılır.





Original parts names, oem numbers, symbols and descriptions used in this catalogue are for reference purposes only.

# GEARBOX GO 170-6 / 8,2-1,0 & GO 190-6 / 8,2 - 1,0

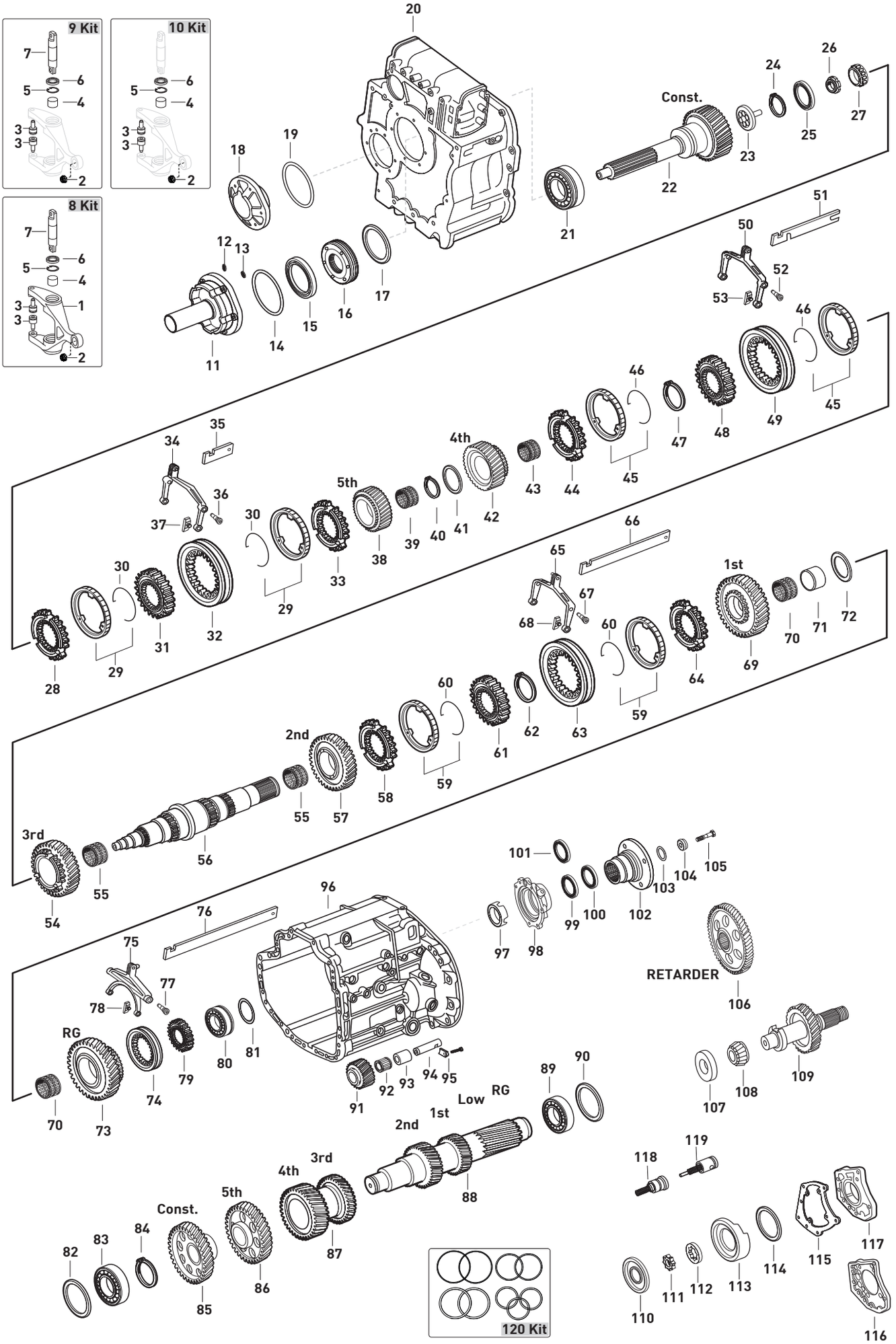




Original parts names, oem numbers, symbols and descriptions used in this catalogue are for reference purposes only.

| Fig. | Kacmaz No | Oem No | Oem Old No | Pcs. | Ürün Tanımı | Description | Sizes | Not | GO170-6/8.2-1 | GO190-6/8.2-1 |
|---|---|---|---|---|---|---|---|---|---|---|
| 22 | | 389 262 8102 | (389 262 8002) | 1 | PRİZDİREK 26 DİŞ | INPUT SHAFT 26 T. | | | | ♦ |
| 23 | K21.04001 | 976 269 0034 | (960 269 0434) | 1 | PRİZDİREK YAĞ PİPETİ | OIL COLLECTOR | | | ♦ | ♦ |
| 24 | K21.04002 | 000 994 9841 | | 1 | PRİZDİREK YAĞ PİPET SEKMANI | RETAINING RING | | | ♦ | ♦ |
| 25 | K21.03539 | 017 997 9947 | (018 997 7347) | 1 | PRİZDİREK ARKA KEÇE | OIL SEAL | 75X94X11,50mm | | ♦ | ♦ |
| | | | (018 997 4947) | | | | | | | |
| 26 | K21.03432 | 945 990 0250 | (945 990 0150) | 1 | KAMALI MİL SOMUNU | NUT | M30X1,5 | | ♦ | ♦ |
| 27 | K21.03619 | 015 981 1605 | (013 981 1105) | 1 | KAMALI MİL UÇ BİLYA | ROLLER BEARING | 39,69X40,39mm | | ♦ | ♦ |
| 28 | K21.06102 | 945 262 7234 | | 1 | PRİZDİREK SENKROMENÇ | ENGAGING RING | | (A) | ♦ | ♦ |
| 28 | K21.06103 | 389 262 9734 | | 1 | PRİZDİREK SENKROMENÇ | ENGAGING RING | | (B) | ♦ | ♦ |
| 29 | K21.03136 | 945 260 2245 | (946 262 6337) | 2 | PRİZDİREK VE 5.VİTES FRENLEME (Mo) | SYNCHRONIZING CONE / Mo | | (A) | ♦ | ♦ |
| 29 | K21.03015 | 389 262 0637 | (387 262 0837) | 2 | PRİZDİREK VE 5.VİTES FRENLEME (Mo) | SYNCHRONIZING CONE / Mo | | (B) | ♦ | ♦ |
| | | | (389 262 1037) | | | | | | | |
| 30 | K21.03044 | 387 262 1093 | (387 262 0693) | 2 | FRENLEME TELİ | SPRING | | | ♦ | ♦ |
| | | | (960 262 1393) | | | | | | | |
| 31 | K21.06104 | 389 262 5335 | | 1 | PRİZDİREK VE 5.VİTES YILDIZ DİŞLİ | SYNCHRONIZER HUB | | | ♦ | ♦ |
| 32 | K21.03137 | 945 262 6823 | (945 262 6423) | 1 | PRİZDİREK VE 5.VİTES HALKA | ENGAGING SLEEVE | | (A) | ♦ | ♦ |
| 32 | K21.03002 | 945 262 2823 | (945 262 0323) | 1 | PRİZDİREK VE 5.VİTES HALKA | ENGAGING SLEEVE | | (B) | ♦ | ♦ |
| | | | (945 262 0623) | | | | | | | |
| | | | (389 262 4123) | | | | | | | |
| | | | (389 262 2723) | | | | | | | |
| 33 | K21.06107 | 945 262 7134 | | 1 | 5.VİTES SENKROMENÇ | ENGAGING RING | | (A) | ♦ | ♦ |
| 33 | K21.06108 | 389 262 9834 | | 1 | 5.VİTES SENKROMENÇ | ENGAGING RING | | (B) | ♦ | ♦ |
| 34 | K21.06404 | 389 260 4130 | (389 260 2930) | 1 | 5./6.VİTES HİLALİ | SHIFTING FORK 5th/6th | | | ♦ | ♦ |
| 35 | | 389 265 9904 | (389 265 7304) | 1 | 5./6.VİTES HİLAL ÇITASI | SHIFTING ROD 5th/6th | | | ♦ | ♦ |
| 36 | K21.04307 | 960 265 0774 | (945 265 1274) | 2 | HİLAL CİVATASI | PIN | | | ♦ | ♦ |
| | | | (945 265 2974) | | | | | | | |
| | | | (945 265 2774) | | | | | | | |
| 37 | K21.03431 | 960 265 0049 | (947 265 0349) | 2 | PRİZ./5.VİTES HİLAL PABUCU | SLIDING PAD | | | ♦ | ♦ |
| | | | (389 265 2749) | | | | | | | |
| 38 | K21.06109 | 389 262 1615 | (389 262 0415) | 1 | 5.VİTES DİŞLİSİ 30 DİŞ | GEAR 5th 30 T. | | | ♦ | ♦ |
| | | | (389 262 0815) | | | | | | | |
| | | | (389 262 0915) | | | | | | | |
| | | | (389 262 1515) | | | | | | | |
| | | | (389 262 1715) | | | | | | | |
| 39 | K21.03833 | 019 981 6010 | (019 981 5810) | 1 | 5.VİTES MASURA BİLYA | NEEDLE CAGE | 60X68X54mm | | ♦ | ♦ |
| 40 | K21.06915 | 389 262 3273 | | 1 | 4./5.VİTES ARA SEKMANI | RETAINING RING | 2,40mm | | ♦ | ♦ |
| 40 | K21.06914 | 389 262 3373 | | 1 | 4./5.VİTES ARA SEKMANI | RETAINING RING | 2,45mm | | ♦ | ♦ |
| 40 | K21.06913 | 389 262 3473 | | 1 | 4./5.VİTES ARA SEKMANI | RETAINING RING | 2,50mm | | ♦ | ♦ |
| 40 | K21.06912 | 389 262 3573 | | 1 | 4./5.VİTES ARA SEKMANI | RETAINING RING | 2,55mm | | ♦ | ♦ |
| 40 | K21.06911 | 389 262 3673 | | 1 | 4./5.VİTES ARA SEKMANI | RETAINING RING | 2,60mm | | ♦ | ♦ |
| 40 | K21.06910 | 389 262 3773 | | 1 | 4./5.VİTES ARA SEKMANI | RETAINING RING | 2,65mm | | ♦ | ♦ |
| 40 | K21.06909 | 389 262 3873 | | 1 | 4./5.VİTES ARA SEKMANI | RETAINING RING | 2,70mm | | ♦ | ♦ |
| 40 | K21.06908 | 389 262 3973 | | 1 | 4./5.VİTES ARA SEKMANI | RETAINING RING | 2,75mm | | ♦ | ♦ |
| 41 | K21.04143 | 389 262 1862 | | 1 | 4./5.VİTES ARA PULU | THRUST WASHER | | | ♦ | ♦ |
| 42 | K21.03247 | 389 262 0814 | (389 262 0114) | 1 | 4.VİTES DİŞLİSİ 35 DİŞ | GEAR 4th 35 T. | | | ♦ | ♦ |
| | | | (389 262 0214) | | | | | | | |
| | | | (389 262 0414) | | | | | | | |
| | | | (389 262 0614) | | | | | | | |
| | | | (389 262 0914) | | | | | | | |
| | | | (389 262 1114) | | | | | | | |
| | | | (976 262 0814) | | | | | | | |
| 43 | K21.03803 | 009 981 1510 | (017 981 7810) | 1 | 4.VİTES MASURA BİLYA | NEEDLE CAGE | 78X86X35mm | | ♦ | ♦ |
| | | | (008 981 9310) | | | | | | | |
| | | | (012 981 9110) | | | | | | | |
| 44 | K21.06110 | 945 262 6134 | | 1 | 4.VİTES SENKROMENÇ | ENGAGING RING | | (A) | ♦ | ♦ |

NOTES :
Parts encoded alphabetic and numaric are used together.

NOTLAR :
Alfabetik ve rakam ile kodlanan parçalar birlikte kullanılır.





Original parts names, oem numbers, symbols and descriptions used in this catalogue are for reference purposes only.

# GEARBOX GO 170-6 / 8,2-1,0 & GO 190-6 / 8,2 - 1,0

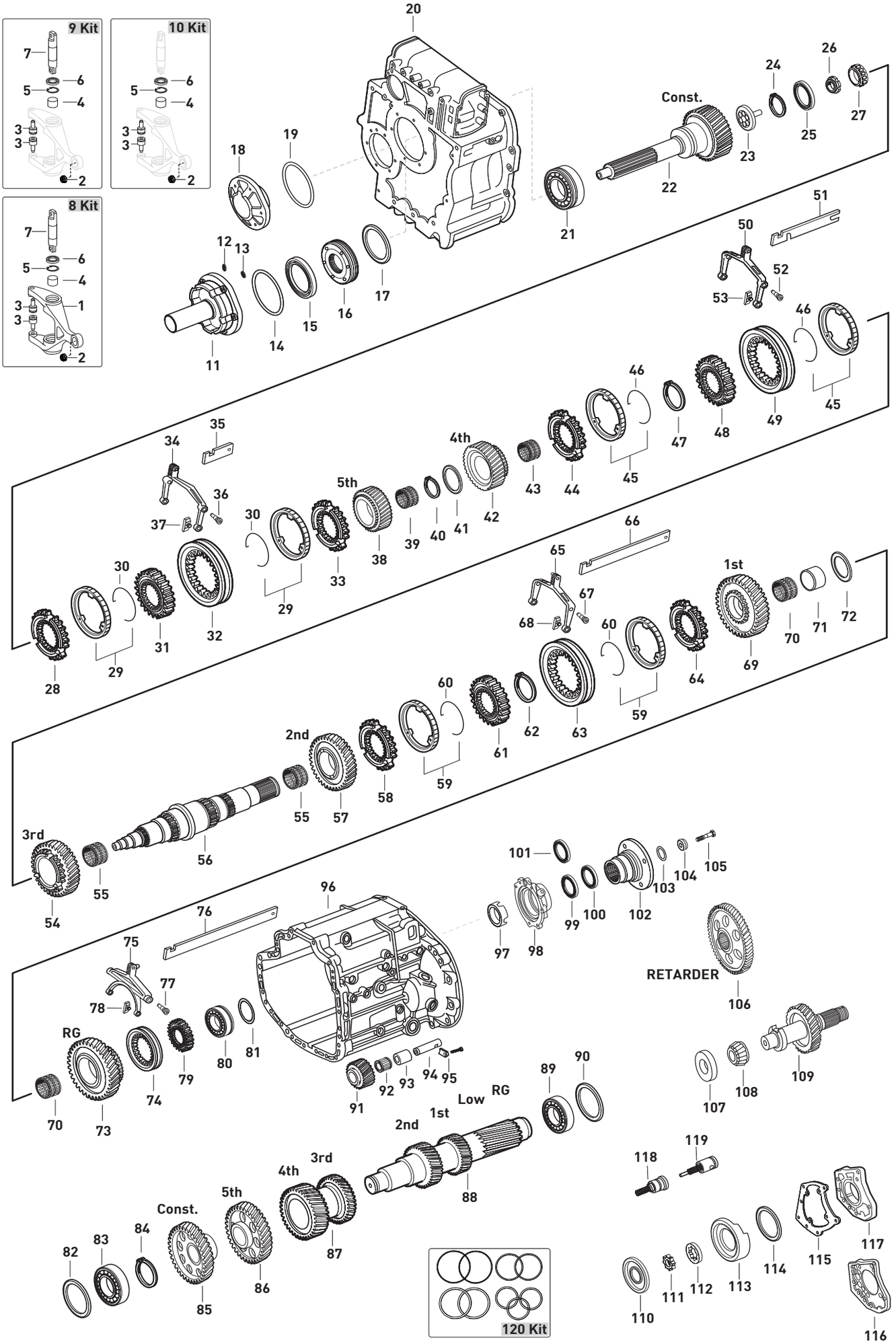




Original parts names, oem numbers, symbols and descriptions used in this catalogue are for reference purposes only.

| Fig. | Kacmaz No | Oem No | Oem Old No | Pcs. | Ürün Tanımı | Description | Sizes | Not | GO170-6/8.2-1 | GO190-6/8.2-1 |
|---|---|---|---|---|---|---|---|---|---|---|
| 44 | K21.06111 | 945 262 5034 | (389 262 5734) | 1 | 4.VİTES SENKROMENÇ | ENGAGING RING | | (B) | ♦ | ♦ |
| 45 | K21.03136 | 945 260 2245 | (946 262 6337) | 2 | 3./4.VİTES FRENLEME (Mo) | SYNCHRONIZING CONE / Mo | | (A) | ♦ | ♦ |
| 45 | K21.03015 | 389 262 0637 | (387 262 0837) | 2 | 3./4.VİTES FRENLEME (Mo) | SYNCHRONIZING CONE / Mo | | (B) | ♦ | ♦ |
| | | | (389 262 1037) | | | | | | | |
| 46 | K21.03044 | 387 262 1093 | (387 262 0693) | 2 | FRENLEME TELİ | SPRING | | | ♦ | ♦ |
| | | | (960 262 1393) | | | | | | | |
| 47 | K21.06927 | 389 262 0173 | | 1 | 3./4.VİTES YILDIZ DİŞLİ SEKMANI | RETAINING RING | 2,90mm | | ♦ | ♦ |
| 47 | K21.06924 | 389 262 0373 | | 1 | 3./4.VİTES YILDIZ DİŞLİ SEKMANI | RETAINING RING | 3,00mm | | ♦ | ♦ |
| 47 | K21.06921 | 389 262 0573 | | 1 | 3./4.VİTES YILDIZ DİŞLİ SEKMANI | RETAINING RING | 3,10mm | | ♦ | ♦ |
| 47 | K21.06919 | 389 262 1273 | | 1 | 3./4.VİTES YILDIZ DİŞLİ SEKMANI | RETAINING RING | 3,20mm | | ♦ | ♦ |
| 47 | K21.06917 | 389 262 1373 | | 1 | 3./4.VİTES YILDIZ DİŞLİ SEKMANI | RETAINING RING | 3,25mm | | ♦ | ♦ |
| 47 | K21.06916 | 389 262 1473 | | 1 | 3./4.VİTES YILDIZ DİŞLİ SEKMANI | RETAINING RING | 3,30mm | | ♦ | ♦ |
| 48 | K21.06112 | 389 262 4435 | | 1 | 3./4.VİTES YILDIZ DİŞLİ 72 DİŞ | SYNCHRONIZER HUB 72 T. | | | ♦ | ♦ |
| 49 | K21.06105 | 945 262 5723 | | 1 | 3./4.VİTES HALKA | ENGAGING SLEEVE | | (A) | ♦ | ♦ |
| 49 | K21.06106 | 389 262 2023 | | 1 | 3./4.VİTES HALKA | ENGAGING SLEEVE | | (B) | ♦ | ♦ |
| 50 | K21.06403 | 389 260 3930 | (389 260 2430) | 1 | 3./4.VİTES HİLALİ | SHIFTING FORK 3rd/4th | | | ♦ | ♦ |
| 51 | | 389 265 9704 | | 1 | 3./4.VİTES HİLAL ÇITASI | SHIFTING ROD | | | ♦ | ♦ |
| 52 | K21.04307 | 960 265 0774 | (945 265 1274) | 2 | HİLAL CİVATASI | PIN | | | ♦ | ♦ |
| | | | (945 265 2974) | | | | | | | |
| | | | (945 265 2774) | | | | | | | |
| 53 | K21.03431 | 960 265 0049 | (947 265 0349) | 2 | 3./4.VİTES HİLAL PABUCU | SLIDING PAD | | | ♦ | ♦ |
| | | | (389 265 2749) | | | | | | | |
| 54 | K21.06113 | 945 262 6417 | | 1 | 3.VİTES DİŞLİSİ 40 DİŞ | GEAR 3rd 40 T. | | (A) | ♦ | ♦ |
| 54 | K21.06114 | 656 262 4413 | (389 262 3513) | 1 | 3.VİTES DİŞLİSİ 40 DİŞ | GEAR 3rd 40 T. | | (B) | ♦ | ♦ |
| | | | (389 262 3613) | | | | | | | |
| | | | (389 262 4313) | | | | | | | |
| | | | (389 262 4413) | | | | | | | |
| | | | (656 262 0013) | | | | | | | |
| 55 | K21.03845 | 008 981 8610 | (007 981 5510) | 2 | 2./3.VİTES MASURA BİLYA | NEEDLE CAGE | 92X100X49,5mm | | ♦ | ♦ |
| | | | (019 981 3410) | | | | | | | |
| | | | (018 981 7910) | | | | | | | |
| 56 | K21.06115 | 656 262 0805 | (389 262 4605) | 1 | KAMALI MİL | MAIN SHAFT | | | ♦ | ♦ |
| | | | (389 262 4505) | | | | | | | |
| | | | (389 262 3205) | | | | | | | |
| | | | (389 262 4005) | | | | | | | |
| 57 | K21.03254 | 976 262 1612 | (389 262 2712) | 1 | 2.VİTES DİŞLİSİ 45 DİŞ | GEAR 2nd 45 T. | | | ♦ | ♦ |
| | | | (976 262 1312) | | | | | | | |
| | | | (976 262 0612) | | | | | | | |
| | | | (976 262 1212) | | | | | | | |
| | | | (976 262 0312) | | | | | | | |
| | | | (389 262 3112) | | | | | | | |
| | | | (976 262 1412) | | | | | | | |
| | | | (976 262 1512) | | | | | | | |
| 58 | K21.06117 | 945 262 6034 | | 1 | 2.VİTES SENKROMENÇ | ENGAGING RING | | (A) | ♦ | ♦ |
| 58 | K21.06118 | 945 262 4934 | (389 262 8334) | 1 | 2.VİTES SENKROMENÇ | ENGAGING RING | | (B) | ♦ | ♦ |
| 59 | K21.03148 | 947 260 1945 | (947 260 4645) | 2 | 1./2.VİTES FRENLEME (Mo) | SYNCHRONIZING CONE / Mo | | (A) | ♦ | ♦ |
| | | | (946 262 6137) | | | | | | | |
| 59 | K21.03016 | 389 262 0737 | (387 262 0937) | 2 | 1./2.VİTES FRENLEME (Mo) | SYNCHRONIZING CONE / Mo | | (B) | ♦ | ♦ |
| | | | (389 262 1137) | | | | | | | |
| 60 | K21.03055 | 387 262 0893 | (387 262 0793) | 2 | FRENLEME TELİ | SPRING | | | ♦ | ♦ |
| 61 | K21.06119 | 389 262 5635 | (389 262 3335) | 1 | 1./2.VİTES YILDIZ DİŞLİ | SYNCHRONIZER HUB | | | ♦ | ♦ |
| 62 | K21.06928 | 387 262 4173 | | 1 | 1./2.VİTES YILDIZ DİŞLİ SEKMANI | RETAINING RING | 2,90mm | | ♦ | ♦ |
| 62 | K21.06926 | 387 262 4273 | | 1 | 1./2.VİTES YILDIZ DİŞLİ SEKMANI | RETAINING RING | 2,95mm | | ♦ | ♦ |
| 62 | K21.06906 | 387 262 4373 | | 1 | 1./2.VİTES YILDIZ DİŞLİ SEKMANI | RETAINING RING | 3,00mm | | ♦ | ♦ |
| 62 | K21.06923 | 387 262 4473 | | 1 | 1./2.VİTES YILDIZ DİŞLİ SEKMANI | RETAINING RING | 3,05mm | | ♦ | ♦ |

NOTES :
Parts encoded alphabetic and numaric are used together.

NOTLAR :
Alfabetik ve rakam ile kodlanan parçalar birlikte kullanılır.





Original parts names, oem numbers, symbols and descriptions used in this catalogue are for reference purposes only.

# GEARBOX GO 170-6 / 8,2-1,0 & GO 190-6 / 8,2 - 1,0

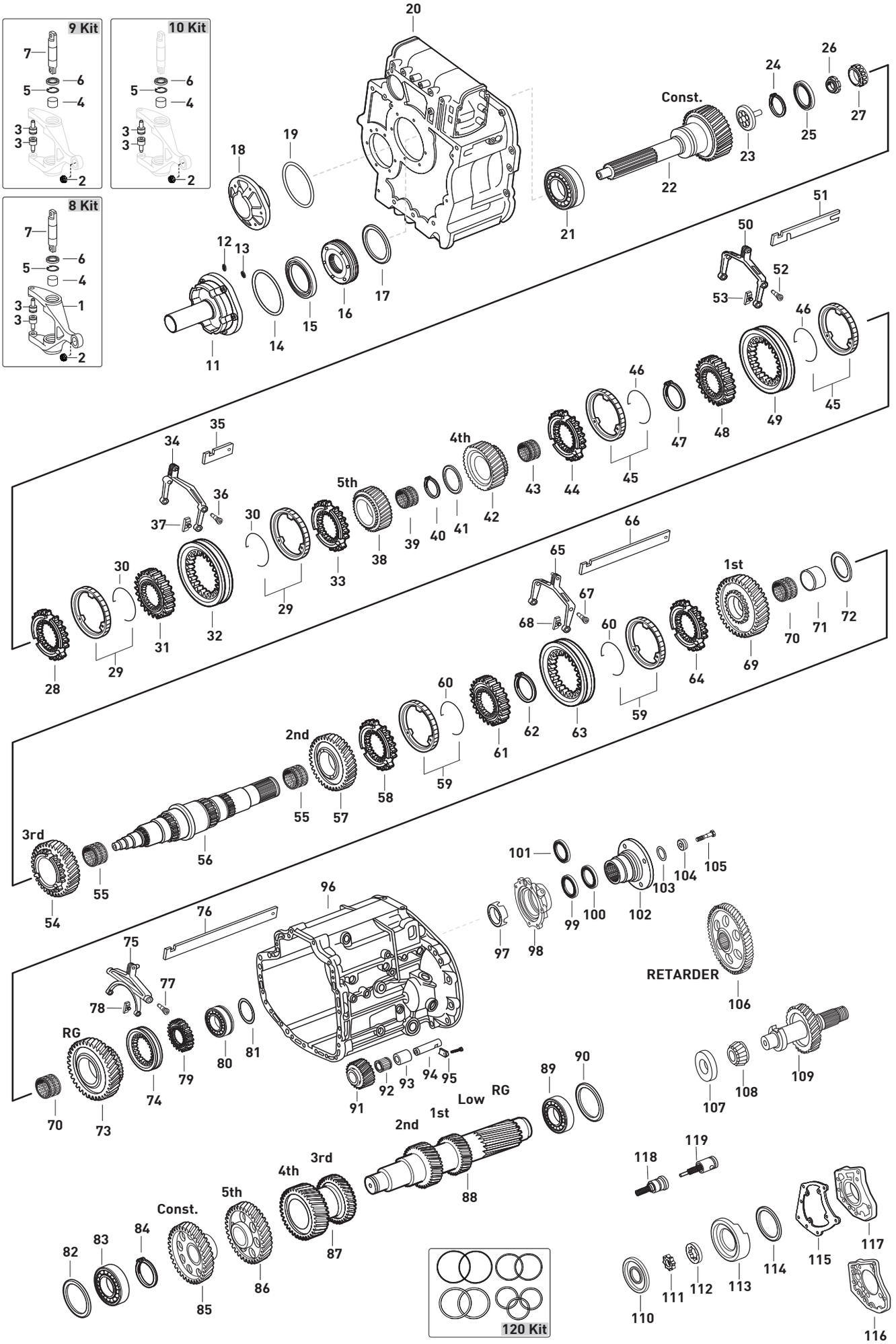




Original parts names, oem numbers, symbols and descriptions used in this catalogue are for reference purposes only.

| Fig. | Kacmaz No | Oem No | Oem Old No | Pcs. | Ürün Tanımı | Description | Sizes | Not | GO170-6/8.2-1 | GO190-6/8.2-1 |
|---|---|---|---|---|---|---|---|---|---|---|
| 62 | K21.06922 | 387 262 4573 | | 1 | 1./2.VİTES YILDIZ DİŞLİ SEKMANI | RETAINING RING | 3,10mm | | ♦ | ♦ |
| 62 | K21.06920 | 387 262 4673 | | 1 | 1./2.VİTES YILDIZ DİŞLİ SEKMANI | RETAINING RING | 3,15mm | | ♦ | ♦ |
| 62 | K21.06918 | 387 262 9773 | | 1 | 1./2.VİTES YILDIZ DİŞLİ SEKMANI | RETAINING RING | 3,20mm | | ♦ | ♦ |
| 63 | K21.06120 | 945 262 5623 | | 1 | 1./2.VİTES HALKA | ENGAGING SLEEVE | | (A) | ♦ | ♦ |
| 63 | K21.06121 | 389 262 2123 | | 1 | 1./2.VİTES HALKA | ENGAGING SLEEVE | | (B) | ♦ | ♦ |
| 64 | K21.06122 | 945 262 5934 | | 1 | 1.VİTES SENKROMENÇ | ENGAGING RING | | (A) | ♦ | ♦ |
| 64 | K21.06123 | 945 262 4834 | (389 262 8234) | 1 | 1.VİTES SENKROMENÇ | ENGAGING RING | | (B) | ♦ | ♦ |
| 65 | | 387 260 4930 | (389 260 3230) | 1 | 1./2.VİTES HİLALİ | SHIFTING FORK | | | ♦ | ♦ |
| 66 | | 389 265 9804 | | 1 | 1./2.VİTES HİLAL ÇITASI | SHIFTING ROD | | | ♦ | ♦ |
| 67 | K21.04307 | 960 265 0774 | (945 265 1274) | 2 | HİLAL CİVATASI | PIN | | | ♦ | ♦ |
| | | | (945 265 2974) | | | | | | | |
| | | | (945 265 2774) | | | | | | | |
| 68 | K21.03431 | 960 265 0049 | (947 265 0349) | 2 | 1./2.VİTES HİLAL PABUCU | SLIDING PAD | | | ♦ | ♦ |
| | | | (389 265 2749) | | | | | | | |
| 69 | K21.06124 | 656 262 0211 | (389 262 3311) | 1 | 1.VİTES DİŞLİSİ 50 DİŞ | GEAR 1st 50 T. | | | ♦ | ♦ |
| | | | (389 262 2511) | | | | | | | |
| | | | (389 262 3411) | | | | | | | |
| | | | (389 262 3011) | | | | | | | |
| 70 | K21.03847 | 021 981 9410 | (008 981 8510) | 2 | 1.VE GERİ VİTES MASUR BİLYA | NEEDLE CAGE | 85X93X45mm | | ♦ | ♦ |
| | | | (008 981 9810) | | | | | | | |
| | | | (019 981 0610) | | | | | | | |
| | | | (019 981 6210) | | | | | | | |
| 71 | K21.06125 | 389 262 2250 | (389 262 2450) | 1 | 1.VİTES MASURA BİLYA ÇANAĞI | BEARING RACE | | | ♦ | ♦ |
| 72 | K21.04284 | 389 262 2855 | | 1 | 1.VİTES MESAFE AYAR PULU | THRUST WASHER | 5,50mm | | ♦ | ♦ |
| 73 | K21.06126 | 389 262 2233 | (389 262 2733) | 1 | GERİ VİTES DİŞLİSİ 47 DİŞ | REVERSE GEAR 47 T. | | | ♦ | ♦ |
| 74 | K21.03061 | 389 262 1823 | (389 262 0923) | 1 | GERİ VİTES HALKASI | ENGAGING SLEEVE | | EPS | ♦ | ♦ |
| 74 | K21.03060 | 389 262 1723 | (389 262 0023) | 1 | GERİ VİTES HALKASI | ENGAGING SLEEVE | | MPS | ♦ | ♦ |
| 75 | | 656 260 0230 | (389 260 2630) | 1 | GERİ VİTES HİLALİ | SHIFTING FORK | | | ♦ | ♦ |
| | | | (389 260 0330) | | | | | | | |
| 76 | | 389 260 2831 | | 1 | GERİ VİTES HİLAL ÇITASI | SHIFTING ROD | | | ♦ | ♦ |
| 77 | K21.04307 | 960 265 0774 | (945 265 1274) | 2 | HİLAL CİVATASI | PIN | | | ♦ | ♦ |
| | | | (945 265 2974) | | | | | | | |
| | | | (945 265 2774) | | | | | | | |
| 78 | K21.03410 | 947 265 0249 | (945 265 0149) | 2 | GERİ VİTES HİLAL PABUCU | SLIDING PAD | | | ♦ | ♦ |
| 79 | K21.06127 | 389 262 4235 | | 1 | GERİ VİTES YILDIZ DİŞLİ | SYNCHRONIZER HUB | | EPS | ♦ | ♦ |
| 79 | K21.06128 | 945 262 7035 | (389 262 4135) | 1 | GERİ VİTES YILDIZ DİŞLİ | SYNCHRONIZER HUB | | MPS | ♦ | ♦ |
| 80 | K21.03658 | 012 981 3705 | (015 981 4005) | 1 | KAMALI MİL ARKA BİLYA | ROLLER BEARING | 65X140X13,5mm | | ♦ | ♦ |
| | | | (018 981 6705) | | | | | | | |
| 81 | K21.04328 | | | 1 | KAMALI MİL ARKA BİLYA RAYNELİ | THRUST WASHER | 0,25mm | | ♦ | ♦ |
| 81 | K21.04327 | | | 1 | KAMALI MİL ARKA BİLYA RAYNELİ | THRUST WASHER | 0,30mm | | ♦ | ♦ |
| 82 | K21.04192 | 406 337 0252 | | 1 | GRUP MİLİ ÖN BİLYA RAYNELİ | THRUST WASHER | 0,10mm | | ♦ | ♦ |
| 82 | K21.04150 | 406 337 0352 | | 1 | GRUP MİLİ ÖN BİLYA RAYNELİ | THRUST WASHER | 0,20mm | | ♦ | ♦ |
| 82 | K21.94150 | | | 1 | GRUP MİLİ ÖN BİLYA RAYNELİ | THRUST WASHER | 0,25mm | | ♦ | ♦ |
| 82 | K21.04338 | 406 337 0452 | | 1 | GRUP MİLİ ÖN BİLYA RAYNELİ | THRUST WASHER | 0,30mm | | ♦ | ♦ |
| 82 | K21.04196 | 389 263 5352 | (389 263 3252) | 1 | GRUP MİLİ ÖN BİLYA RAYNELİ | THRUST WASHER | 0,40mm | | ♦ | ♦ |
| 82 | K21.04194 | 389 263 3352 | | 1 | GRUP MİLİ ÖN BİLYA RAYNELİ | THRUST WASHER | 0,45mm | | ♦ | ♦ |
| 82 | K21.06719 | 389 263 5652 | | 1 | GRUP MİLİ ÖN BİLYA RAYNELİ | THRUST WASHER | 0,49mm | | ♦ | ♦ |
| 82 | K21.04197 | 389 263 5852 | (389 263 3552) | 1 | GRUP MİLİ ÖN BİLYA RAYNELİ | THRUST WASHER | 0,55mm | | ♦ | ♦ |
| 82 | K21.04340 | 389 263 6052 | | 1 | GRUP MİLİ ÖN BİLYA RAYNELİ | THRUST WASHER | 0,61mm | | ♦ | ♦ |
| 82 | K21.04198 | 389 263 6352 | (389 263 3852) | 1 | GRUP MİLİ ÖN BİLYA RAYNELİ | THRUST WASHER | 0,70mm | | ♦ | ♦ |
| 82 | K21.04154 | 389 263 3952 | | 1 | GRUP MİLİ ÖN BİLYA RAYNELİ | THRUST WASHER | 0,75mm | | ♦ | ♦ |
| 82 | K21.04199 | 389 263 6852 | | 1 | GRUP MİLİ ÖN BİLYA RAYNELİ | THRUST WASHER | 0,85mm | | ♦ | ♦ |
| 82 | K21.04200 | 389 263 7352 | | 1 | GRUP MİLİ ÖN BİLYA RAYNELİ | THRUST WASHER | 1,00mm | | ♦ | ♦ |
| 82 | K21.04201 | 389 263 7852 | | 1 | GRUP MİLİ ÖN BİLYA RAYNELİ | THRUST WASHER | 1,15mm | | ♦ | ♦ |
| 82 | K21.04202 | 389 263 8352 | | 1 | GRUP MİLİ ÖN BİLYA RAYNELİ | THRUST WASHER | 1,30mm | | ♦ | ♦ |

NOTES :
Parts encoded alphabetic and numaric are used together.

NOTLAR :
Alfabetik ve rakam ile kodlanan parçalar birlikte kullanılır.





Original parts names, oem numbers, symbols and descriptions used in this catalogue are for reference purposes only.

# GEARBOX GO 170-6 / 8,2-1,0 & GO 190-6 / 8,2 - 1,0

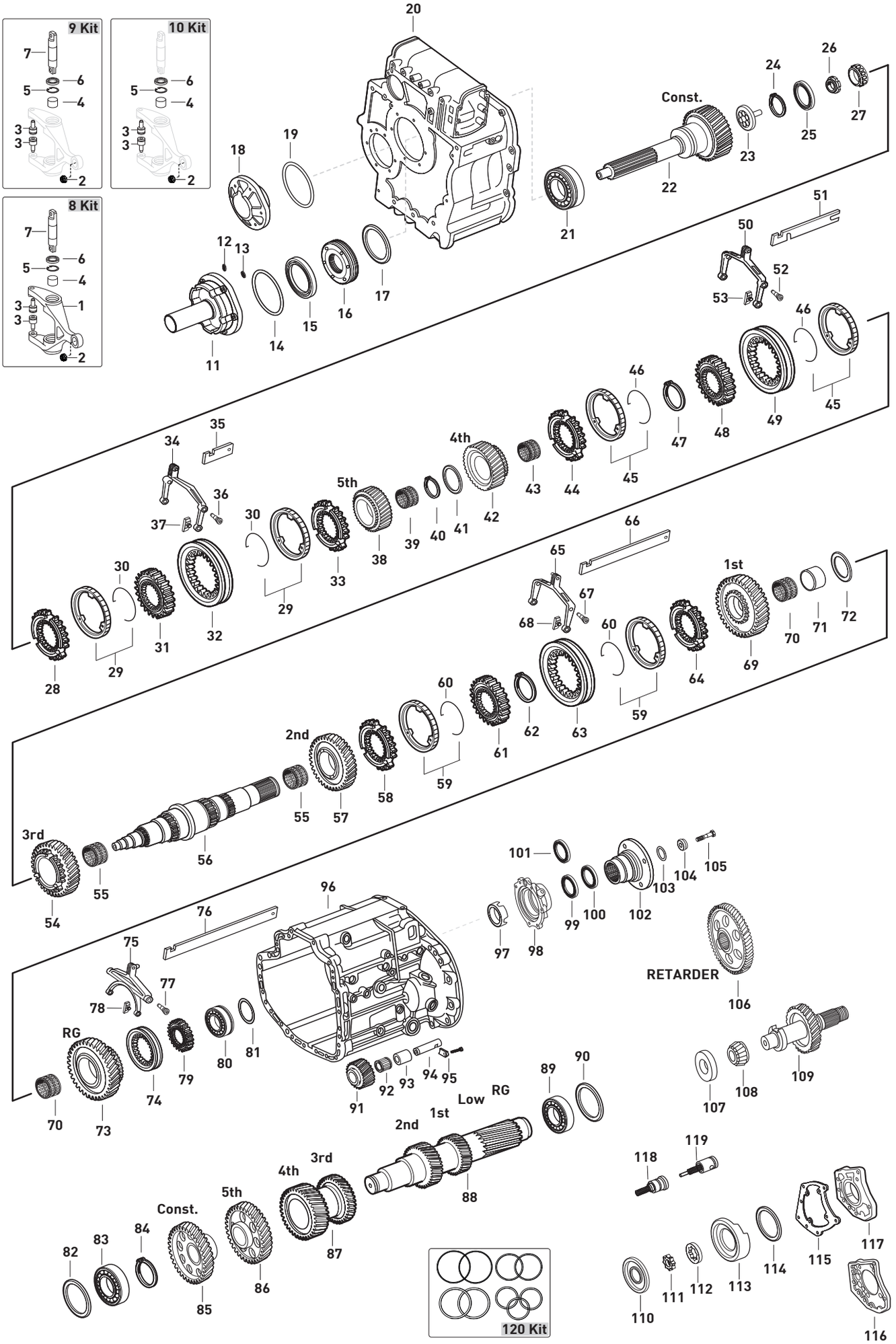




Original parts names, oem numbers, symbols and descriptions used in this catalogue are for reference purposes only.

| Fig. | Kacmaz No | Oem No | Oem Old No | Pcs. | Ürün Tanımı | Description | Sizes | Not | GO170-6/8.2-1 | GO190-6/8.2-1 |
|---|---|---|---|---|---|---|---|---|---|---|
| 83 | K21.03606 | 015 981 9005 | (014 981 1405) | 1 | GRUP MİLİ ÖN BİLYA | ROLLER BEARING | 50,8X100X35mm | | ♦ | ♦ |
| | | | (012 981 7405) | | | | | | | |
| | | | (012 981 5105) | | | | | | | |
| 84 | K21.06426 | 900055 060300 | (000 264 5351) | 1 | GRUP MİLİ ÖN BİLYA SEKMANI | RETAINING RING | 3,00mm | | ♦ | ♦ |
| 85 | K21.06139 | 389 263 2910 | (389 263 2110) | 1 | PRİZDİREK DİŞLİ KARŞILIĞI 51 DİŞ | CONSTANT GEAR 51 T | | | ♦ | ♦ |
| | | | (389 263 2510) | | | | | | | |
| 86 | K21.06140 | 389 263 0915 | (389 263 0415) | 1 | 5.VİTES DİŞLİ KARŞILIĞI 47 DİŞ | GEAR 5th 47 T | | | ♦ | ♦ |
| | | | (389 263 0815) | | | | | | | |
| 87 | K21.06141 | 656 263 0013 | (389 263 2713) | 1 | 3./4.VİT.DİŞLİ KARŞILIĞI 28/38 DİŞ | DOUBLE GEAR 3rd/4th 28/38 T | | | ♦ | ♦ |
| | | | (389 263 2813) | | | | | | | |
| | | | (389 263 3013) | | | | | | | |
| 88 | K21.06142 | 389 263 3402 | (389 263 2102) | 1 | GRUP MİLİ 12/19 DİŞ | COUNTER SHAFT 12/19 T | | | ♦ | ♦ |
| | | | (389 263 2302) | | | | | | | |
| | | | (389 263 2402) | | | | | | | |
| | | | (389 263 2602) | | | | | | | |
| | | | (389 263 2702) | | | | | | | |
| 89 | K21.03660 | 012 981 3605 | (015 981 4105) | 1 | GRUP MİLİ ARKA BİLYA | ROLLER BEARING | 45X110X12mm | | ♦ | ♦ |
| 90 | K21.04325 | | | 1 | GRUP MİLİ ARKA BİLYA RAYNELİ | THRUST WASHER | 0,30mm | | ♦ | ♦ |
| 90 | K21.04326 | | | 1 | GRUP MİLİ ARKA BİLYA RAYNELİ | THRUST WASHER | 0,25mm | | ♦ | ♦ |
| 91 | K21.06144 | 389 263 1931 | | 1 | KÜÇÜK GERİ VİTES DİŞLİSİ 21 DİŞ | REVERSE IDLER GEAR 21 T. | | | ♦ | ♦ |
| 92 | | 015 981 4110 | (019 981 0510) | 1 | KÜÇÜK GERİ VİTES MAS.BİLYA | NEEDLE BEARING | 48X60X31mm | | ♦ | ♦ |
| 93 | K21.06146 | 389 263 0650 | | 1 | K.GERİ VİTES MASURA BİLYA ÇANAĞI | BUSHING | 63,10mm | | ♦ | ♦ |
| 94 | K21.06148 | 976 263 0330 | (389 263 0730) | 1 | KÜÇÜK GERİ VİTES PİMİ | PIN | | | ♦ | ♦ |
| 95 | | 976 263 0041 | | 1 | KÜÇÜK GERİ VİTES PİM TUTUCU | PIN | | | ♦ | ♦ |
| 96 | | 389 261 0629 | | 1 | ŞANZIMAN ORTA GÖVDE | HOUSING | | | ♦ | ♦ |
| 97 | K21.04144 | 387 262 0928 | | 1 | ŞANZIMAN KM DEVİR SACI | PULSE STAR | | | ♦ | ♦ |
| 98 | | 389 261 1520 | (389 261 1420) | 1 | ŞANZIMAN ARKA KEÇE KAPAĞI | COVER | | | ♦ | ♦ |
| 99 | K21.03537 | 017 997 2547 | (007 997 3847) | 1 | ŞANZIMAN ARKA KEÇE | OIL SEAL | 80X100X10mm | | ♦ | ♦ |
| | | | (007 997 9847) | | | | | | | |
| | | | (008 997 0347) | | | | | | | |
| 100 | K26.00104 | 017 997 7947 | (007 997 8446) | 1 | ŞANZIMAN ARKA KEÇE | OIL SEAL | 80X100X10mm | | ♦ | ♦ |
| | | | (008 997 0047) | | | | | | | |
| | | | (009 997 0746) | | | | | | | |
| | | | (012 997 2347) | | | | | | | |
| | | | (012 997 4447) | | | | | | | |
| 101 | K21.03519 | 023 997 8847 | (020 997 6447) | 1 | ŞANZIMAN ARKA KEÇE | OIL SEAL | 80X100X15,5mm | | ♦ | ♦ |
| | | | (023 997 8547) | | | | | | | |
| 102 | | 387 264 3445 | | 1 | ŞANZIMAN FLANŞI | COMPANION FLANGE | 4-H, Ø180mm | | ♦ | |
| 102 | | 629 262 0145 | | 1 | ŞANZIMAN FLANŞI | COMPANION FLANGE | 4-H, Ø180mm | | | ♦ |
| 102 | K21.06589 | 629 262 0045 | | 1 | ŞANZIMAN FLANŞI | COMPANION FLANGE | 4-H, Ø150mm | | | ♦ |
| 102 | | 387 264 2445 | | 1 | ŞANZIMAN FLANŞI | COMPANION FLANGE | 4-H, Ø162mm | | | ♦ |
| 102 | | 947 262 0345 | | 1 | ŞANZIMAN FLANŞI | COMPANION FLANGE | 4-H, Ø150mm | | | ♦ |
| 103 | K21.06990 | 027 997 3048 | (023 997 5548) | 1 | ŞANZIMAN FLANŞ ORİNGİ | O-RING | 56,52X5,33mm | | ♦ | ♦ |
| | | | (023 997 6048) | | | | | | | |
| 104 | | 976 262 0362 | | 1 | ŞANZ.FLANŞI ALIN PULU | THRUST WASHER | | | ♦ | ♦ |
| 105 | | 000000 000963 | | 1 | ŞANZ.FLANŞI ALIN VİDASI | SCREW | M20X1,5X80mm | | ♦ | ♦ |
| 106 | K21.06137 | 960 264 0420 | (629 264 0020) | 1 | RETARDER DİŞLİSİ 61 DİŞ | RETARDER GEAR 61 T | | | ♦ | ♦ |
| 107 | | 000 438 0112 | | 1 | RETARDER MİL PULU | THRUST WASHER | 14X4mm | | ♦ | ♦ |
| 108 | | 002 981 6581 | | 1 | RETARDER MİL BİLYASI | ROLLER BEARING | | | ♦ | ♦ |
| 109 | K21.06135 | 629 430 0246 | (629 430 0146) | 1 | RETARDER MİLİ | INTERMEDIATE SHAFT | | | ♦ | ♦ |
| 110 | K21.03458 | 389 269 2001 | (389 269 1901) | 1 | YAĞ POMPA KAPAĞI | OIL PUMP COVER | | | ♦ | ♦ |
| 111 | K21.03459 | 389 269 1606 | (389 269 1706) | 1 | YAĞ POMPA İÇ ROTOR | OIL PUMP GEAR | | | ♦ | ♦ |
| 112 | K21.03414 | 389 269 0706 | (389 269 1206) | 1 | YAĞ POMPA DIŞ ROTOR | ROTOR | | | ♦ | ♦ |
| 113 | K21.06261 | 656 269 0001 | (629 269 0001) | 1 | YAĞ POMPA GÖVDESİ | OIL PUMP HOUSING | | | ♦ | ♦ |
| 114 | K21.04289 | 389 263 1352 | | 1 | YAĞ POMPA AYAR RAYNELİ | THRUST WASHER | 0,10mm | | ♦ | ♦ |

NOTES :
Parts encoded alphabetic and numaric are used together.

NOTLAR :
Alfabetik ve rakam ile kodlanan parçalar birlikte kullanılır.





Original parts names, oem numbers, symbols and descriptions used in this catalogue are for reference purposes only.

# GEARBOX GO 170-6 / 8,2-1,0 & GO 190-6 / 8,2 - 1,0

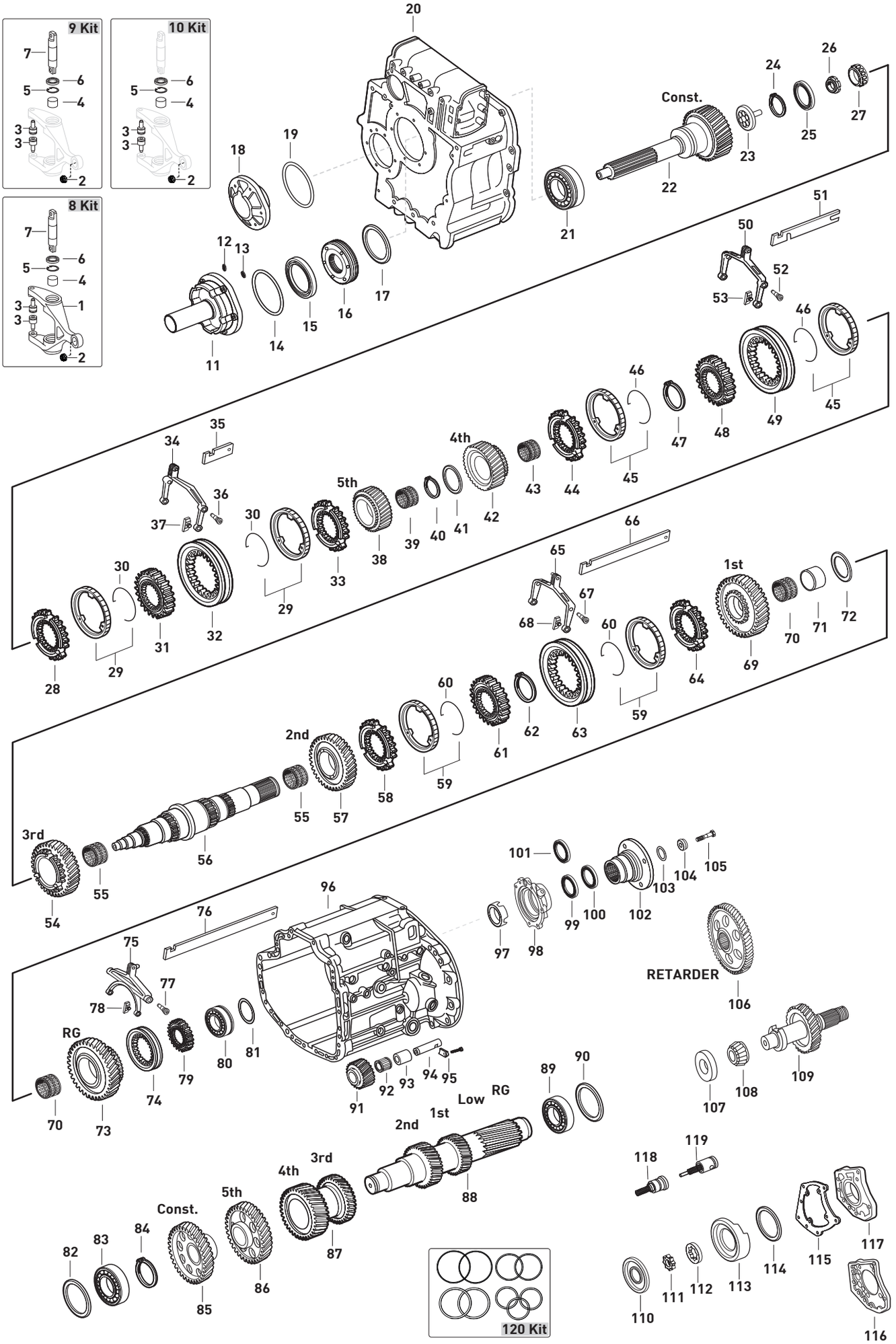


Original parts names, oem numbers, symbols and descriptions used in this catalogue are for reference purposes only.

| Fig. | Kacmaz No | Oem No | Oem Old No | Pcs. | Ürün Tanımı | Description | Sizes | Not | GO170-6/8.2-1 | GO190-6/8.2-1 |
|---|---|---|---|---|---|---|---|---|---|---|
| 114 | K21.04290 | 389 263 1452 | | 1 | YAĞ POMPA AYAR RAYNELİ | THRUST WASHER | 0,15mm | | ♦ | ♦ |
| 114 | K21.04291 | 389 263 1552 | | 1 | YAĞ POMPA AYAR RAYNELİ | THRUST WASHER | 0,25mm | | ♦ | ♦ |
| 114 | K21.04292 | 389 263 1652 | | 1 | YAĞ POMPA AYAR RAYNELİ | THRUST WASHER | 0,30mm | | ♦ | ♦ |
| 114 | K21.04293 | 389 263 1752 | | 1 | YAĞ POMPA AYAR RAYNELİ | THRUST WASHER | 0,50mm | | ♦ | ♦ |
| 115 | | 389 261 1580 | | 1 | YAĞ POMPA KAPAK CONTASI | GASKET | | | ♦ | ♦ |
| 116 | K21.03667 | 945 261 0680 | (945 261 0580) | 1 | PTO KAPAK CONTASI | GASKET | | | ♦ | ♦ |
| | | | (945 261 0080) | | | | | | | |
| 117 | K21.06143 | 656 261 0133 | (389 261 1233) | 1 | PTO KAPAĞI | COVER | | | ♦ | ♦ |
| | | | (389 261 1333) | | | | | | | |
| | | | (389 261 2533) | | | | | | | |
| 118 | K21.06953 | 960 260 1057 | | Kit | YAĞ BASINÇ VALFİ KOMPLE | VALVE KIT | | | ♦ | ♦ |
| 119 | K21.06973 | 960 260 1257 | | Kit | YAĞ BASINÇ VALFİ KOMPLE | VALVE KIT | | | ♦ | ♦ |
| 120 | K21.04329 | | | Kit | RAYNEL TAKIMI | WASHER KIT | | | ♦ | ♦ |

NOTES :
Parts encoded alphabetic and numaric are used together.

NOTLAR :
Alfabetik ve rakam ile kodlanan parçalar birlikte kullanılır.





Original parts names, oem numbers, symbols and descriptions used in this catalogue are for reference purposes only.

SYNCHRONIZER KIT Const./5th
NEW MODEL

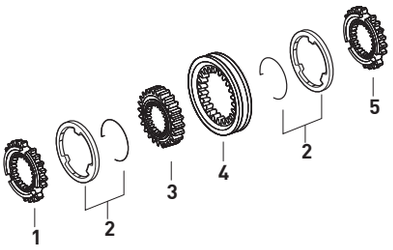


| Fig. | Kacmaz No. | Oem No | Oem Old No | Pcs. | Ürün Tanımı | Description |
|---|---|---|---|---|---|---|
| | K21.06226 | | | Kit | PRİZ./5.VİTES SENK.KİT | SYNCH.KIT Const./5th |
| 1 | K21.06102 | 945 262 7234 | | 1 | PRİZDİREK SENKROMENÇ | ENGAGING RING |
| 2 | K21.03136 | 945 260 2245 | (946 262 6337) | 2 | PRİZ./5.VİT.FRENLEME (Mo) | SYNCHRONIZING CONE / Mo |
| 3 | K21.06104 | 389 262 5335 | | 1 | PRİZ./5.VİT.YILDIZ DİŞLİ | SYNCHRONIZER HUB |
| 4 | K21.03137 | 945 262 6823 | (945 262 6423) | 1 | PRİZ./5.VİTES HALKA | ENGAGING SLEEVE |
| 5 | K21.06107 | 945 262 7134 | | 1 | 5.VİTES SENKROMENÇ | ENGAGING RING |

SYNCHRONIZER KIT Const./5th
NEW MODEL

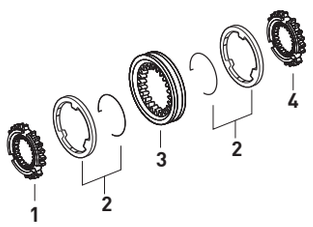


| Fig. | Kacmaz No. | Oem No | Oem Old No | Pcs. | Ürün Tanımı | Description |
|---|---|---|---|---|---|---|
| | K21.03699 | | | Kit | PRİZ./5.VİTES SENK.KİT | SYNCH.KIT Const./5th |
| 1 | K21.06102 | 945 262 7234 | | 1 | PRİZDİREK SENKROMENÇ | ENGAGING RING |
| 2 | K21.03136 | 945 260 2245 | (946 262 6337) | 2 | PRİZ./5.VİT.FRENLEME (Mo) | SYNCHRONIZING CONE / Mo |
| 3 | K21.03137 | 945 262 6823 | (945 262 6423) | 1 | PRİZ./5.VİTES HALKA | ENGAGING SLEEVE |
| 4 | K21.06107 | 945 262 7134 | | 1 | 5.VİTES SENKROMENÇ | ENGAGING RING |

SYNCHRONIZER KIT Const./5th
OLD MODEL

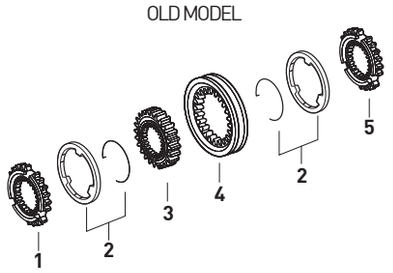


| Fig. | Kacmaz No. | Oem No | Oem Old No | Pcs. | Ürün Tanımı | Description |
|---|---|---|---|---|---|---|
| | K21.06227 | | | Kit | PRİZ./5.VİTES SENK.KİT | SYNCH.KIT Const./5th |
| 1 | K21.06103 | 389 262 9734 | | 1 | PRİZDİREK SENKROMENÇ | ENGAGING RING |
| 2 | K21.03015 | 389 262 0637 | (387 262 0837) | 2 | PRİZ./5.VİT.FRENLEME (Mo) | SYNCHRONIZING CONE / Mo |
| 3 | K21.06104 | 389 262 5335 | | 1 | PRİZ./5.VİT.YILDIZ DİŞLİ | SYNCHRONIZER HUB |
| 4 | K21.03002 | 945 262 2823 | (945 262 0323) | 1 | PRİZ./5.VİTES HALKA | ENGAGING SLEEVE |
| 5 | K21.06108 | 389 262 9834 | | 1 | 5.VİTES SENKROMENÇ | ENGAGING RING |

SYNCHRONIZER KIT Const./5th
OLD MODEL

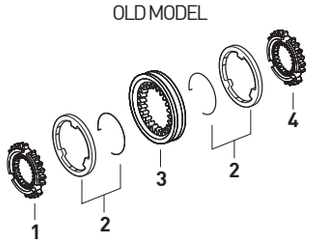


| Fig. | Kacmaz No. | Oem No | Oem Old No | Pcs. | Ürün Tanımı | Description |
|---|---|---|---|---|---|---|
| | K21.03700 | | | Kit | PRİZ./5.VİTES SENK.KİT | SYNCH.KIT Const./5th |
| 1 | K21.06103 | 389 262 9734 | | 1 | PRİZDİREK SENKROMENÇ | ENGAGING RING |
| 2 | K21.03015 | 389 262 0637 | (387 262 0837) | 2 | PRİZ./5.VİT.FRENLEME (Mo) | SYNCHRONIZING CONE / Mo |
| 3 | K21.03002 | 945 262 2823 | (945 262 0323) | 1 | PRİZ./5.VİTES HALKA | ENGAGING SLEEVE |
| 4 | K21.06108 | 389 262 9834 | | 1 | 5.VİTES SENKROMENÇ | ENGAGING RING |

SYNCHRONIZER KIT 3rd/4th
NEW MODEL

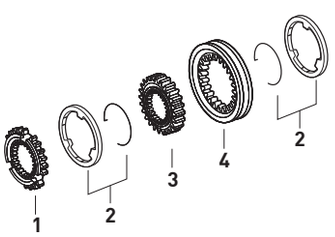


| Fig. | Kacmaz No. | Oem No | Oem Old No | Pcs. | Ürün Tanımı | Description |
|---|---|---|---|---|---|---|
| | K21.06228 | | | Kit | 3./4.VİT.SENKROMENÇ KİT | SYNCH.KIT 3rd/4th |
| 1 | K21.06110 | 945 262 6134 | | 1 | 4.VİTES SENKROMENÇ | ENGAGING RING |
| 2 | K21.03136 | 945 260 2245 | (946 262 6337) | 2 | 3./4.VİTES FRENLEME (Mo) | SYNCHRONIZING CONE / Mo |
| 3 | K21.06112 | 389 262 4435 | | 1 | 3./4.VİTES YILDIZ DİŞLİ | SYNCHRONIZER HUB |
| 4 | K21.06105 | 945 262 5723 | | 1 | 3./4.VİTES HALKA | ENGAGING SLEEVE |

SYNCHRONIZER KIT 3rd/4th
NEW MODEL

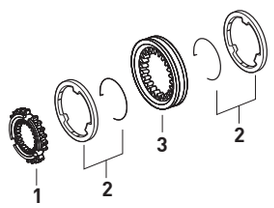


| Fig. | Kacmaz No. | Oem No | Oem Old No | Pcs. | Ürün Tanımı | Description |
|---|---|---|---|---|---|---|
| | K21.03701 | | | Kit | 3./4.VİT.SENKROMENÇ KİT | SYNCH.KIT 3rd/4th |
| 1 | K21.06110 | 945 262 6134 | | 1 | 4.VİTES SENKROMENÇ | ENGAGING RING |
| 2 | K21.03136 | 945 260 2245 | (946 262 6337) | 2 | 3./4.VİTES FRENLEME (Mo) | SYNCHRONIZING CONE / Mo |
| 3 | K21.06105 | 945 262 5723 | | 1 | 3./4.VİTES HALKA | ENGAGING SLEEVE |



**Original parts names, oem numbers, symbols and descriptions used in this catalogue are for reference purposes only.**

| Fig. | Kacmaz No. | Oem No | Oem Old No | Pcs. | Ürün Tanımı | Description |
|---|---|---|---|---|---|---|
| | K21.06229 | | | Kit | 3./4.VİT.SENKROMENÇ KİT | SYNCH.KIT 3rd/4th |
| 1 | K21.06111 | 945 262 5034 | (389 262 5734) | 1 | 4.VİTES SENKROMENÇ | ENGAGING RING |
| 2 | K21.03015 | 389 262 0637 | (387 262 0837) | 2 | 3./4.VİTES FRENLEME (Mo) | SYNCHRONIZING CONE / Mo |
| 3 | K21.06112 | 389 262 4435 | | 1 | 3./4.VİTES YILDIZ DİŞLİ | SYNCHRONIZER HUB |
| 4 | K21.06106 | 389 262 2023 | | 1 | 3./4.VİTES SENK.HALKA | ENGAGING SLEEVE |

SYNCHRONIZER KIT 3rd/4th
OLD MODEL

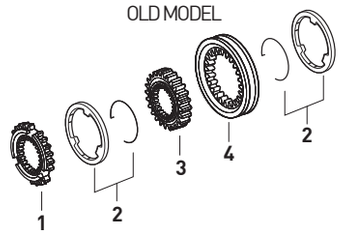


| Fig. | Kacmaz No. | Oem No | Oem Old No | Pcs. | Ürün Tanımı | Description |
|---|---|---|---|---|---|---|
| | K21.06860 | | | Kit | 3./4.VİT.SENKROMENÇ KİT | SYNCH.KIT 3rd/4th |
| 1 | K21.06111 | 945 262 5034 | (389 262 5734) | 1 | 4.VİTES SENKROMENÇ | ENGAGING RING |
| 2 | K21.03015 | 389 262 0637 | (387 262 0837) | 2 | 3./4.VİTES FRENLEME (Mo) | SYNCHRONIZING CONE / Mo |
| 3 | K21.06106 | 389 262 2023 | | 1 | 3./4.VİTES SENK.HALKA | ENGAGING SLEEVE |

SYNCHRONIZER KIT 3rd/4th
OLD MODEL

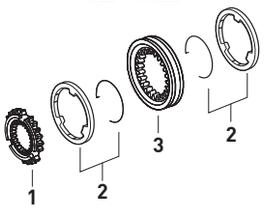


| Fig. | Kacmaz No. | Oem No | Oem Old No | Pcs. | Ürün Tanımı | Description |
|---|---|---|---|---|---|---|
| | K21.06230 | | | Kit | 1./2.VİT.SENKROMENÇ KİT | SYNCH.KIT 1st/2nd |
| 1 | K21.06117 | 945 262 6034 | | 1 | 2.VİTES SENKROMENÇ | ENGAGING RING |
| 2 | K21.03148 | 947 260 1945 | (947 260 4645) | 2 | 1./2.VİTES FRENLEME (Mo) | SYNCHRONIZING CONE |
| | | | (946 262 6137) | | | |
| 3 | K21.06119 | 389 262 5635 | (389 262 3335) | 1 | 1./2.VİTES YILDIZ DİŞLİ | SYNCHRONIZER HUB |
| 4 | K21.06120 | 945 262 5623 | | 1 | 1./2.VİTES HALKA | ENGAGING SLEEVE |
| 5 | K21.06122 | 945 262 5934 | | 1 | 1.VİTES SENKROMENÇ | ENGAGING RING |

SYNCHRONIZER KIT 1st/2nd
NEW MODEL

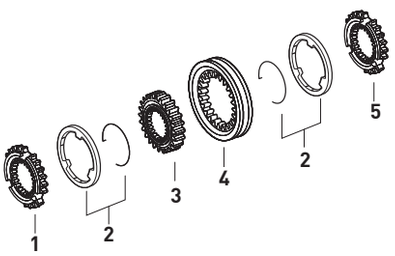


| Fig. | Kacmaz No. | Oem No | Oem Old No | Pcs. | Ürün Tanımı | Description |
|---|---|---|---|---|---|---|
| | K21.06861 | | | Kit | 1./2.VİT. SENKROMENÇ KİT | SYNCH.KIT 1st/2nd |
| 1 | K21.06117 | 945 262 6034 | | 1 | 2.VİTES SENKROMENÇ | ENGAGING RING |
| 2 | K21.03148 | 947 260 1945 | (947 260 4645) | 2 | 1./2.VİTES FRENLEME (Mo) | SYNCHRONIZING CONE / Mo |
| | | | (946 262 6137) | | | |
| 3 | K21.06120 | 945 262 5623 | | 1 | 1./2.VİTES HALKA | ENGAGING SLEEVE |
| 4 | K21.06122 | 945 262 5934 | | 1 | 1.VİTES SENKROMENÇ | ENGAGING RING |

SYNCHRONIZER KIT 1st/2nd
NEW MODEL

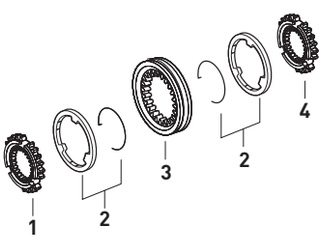


| Fig. | Kacmaz No. | Oem No | Oem Old No | Pcs. | Ürün Tanımı | Description |
|---|---|---|---|---|---|---|
| | K21.06231 | | | Kit | 1./2.VİT.SENK.KİT | SYNCH.KIT 1st/2nd |
| 1 | K21.06118 | 945 262 4934 | (389 262 8334) | 1 | 2.VİTES SENKROMENÇ | ENGAGING RING |
| 2 | K21.03016 | 389 262 0737 | (387 262 0937) | 2 | 1./2.VİTES FRENLEME (Mo) | SYNCHRONIZING CONE / Mo |
| 3 | K21.06119 | 389 262 5635 | (389 262 3335) | 1 | 1./2.VİTES YILDIZ DİŞLİ | SYNCHRONIZER HUB |
| 4 | K21.06121 | 389 262 2123 | | 1 | 1./2.VİTES HALKA | ENGAGING SLEEVE |
| 5 | K21.06123 | 945 262 4834 | (389 262 8234) | 1 | 1.VİTES SENKROMENÇ | ENGAGING RING |

SYNCHRONIZER KIT 1st/2nd
OLD MODEL

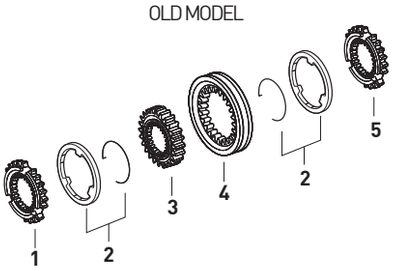


| Fig. | Kacmaz No. | Oem No | Oem Old No | Pcs. | Ürün Tanımı | Description |
|---|---|---|---|---|---|---|
| | K21.06862 | | | Kit | 1./2.VİT.SENK. KİT | SYNCH.KIT 1st/2nd |
| 1 | K21.06118 | 945 262 4934 | (389 262 8334) | 1 | 2.VİTES SENKROMENÇ | ENGAGING RING |
| 2 | K21.03016 | 389 262 0737 | (387 262 0937) | 2 | 1./2.VİTES FRENLEME (Mo) | SYNCHRONIZING CONE / Mo |
| 3 | K21.06121 | 389 262 2123 | | 1 | 1./2.VİTES HALKA | ENGAGING SLEEVE |
| 4 | K21.06123 | 945 262 4834 | (389 262 8234) | 1 | 1.VİTES SENKROMENÇ | ENGAGING RING |

SYNCHRONIZER KIT 1st/2nd
OLD MODEL

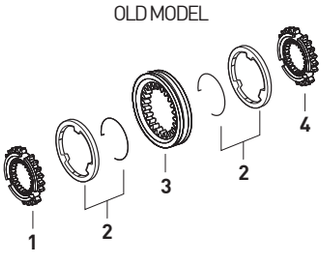




Original parts names, oem numbers, symbols and descriptions used in this catalogue are for reference purposes only.

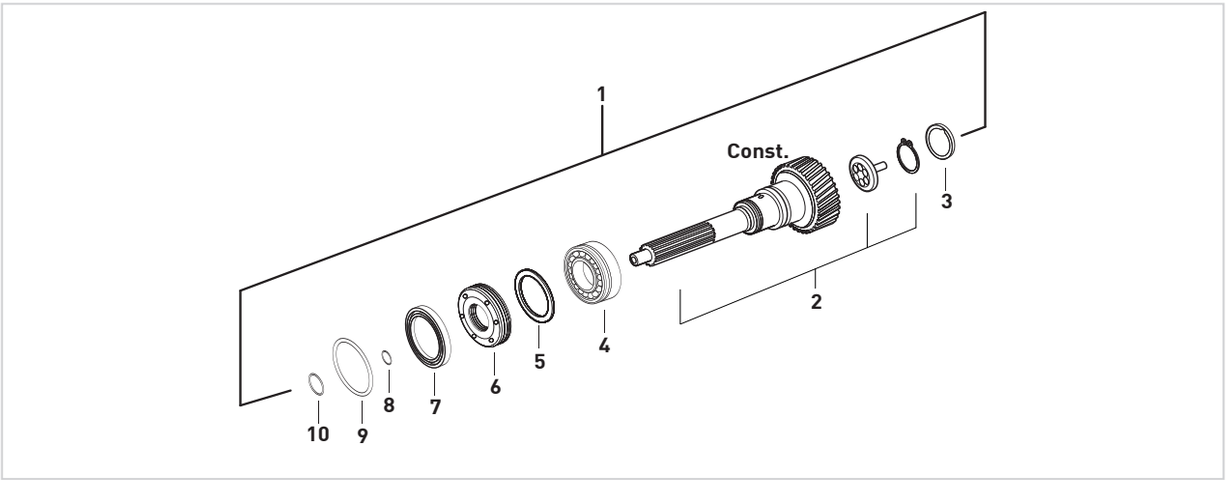


| Fig. | Kacmaz No. | Oem No | Oem Old No | Pcs. | Ürün Tanımı | Description | Sizes |
|---|---|---|---|---|---|---|---|
| 1 | K21.06485 | | | Kit | PRİZDİREK KOMPLE | INPUT SHAFT COMPLETE | |
| 2 | K21.06088 | 656 262 6882 | (656 262 2882) | 1 | PRİZDİREK 26 DİŞ | INPUT SHAFT 26 T. | |
| 3 | K21.03539 | 017 997 9947 | (018 997 7347) | 1 | PRİZDİREK ARKA KEÇE | OIL SEAL | 75X94X11,5mm |
| 4 | K21.03618 | 011 981 1305 | (014 981 9005) | 1 | PRİZDİREK ÖN BİLYA | ROLLER BEARING | 75X140X34,25mm |
| 5 | K21.04162 | 389 262 4152 | (389 262 0955) | 1 | PRİZDİREK AYAR RAYNELİ | THRUST WASHER | 0,10mm |
| 5 | K21.06715 | 389 262 3055 | | 1 | PRİZDİREK AYAR RAYNELİ | THRUST WASHER | 0,25mm |
| 5 | K21.04221 | 389 262 3255 | | 1 | PRİZDİREK AYAR RAYNELİ | THRUST WASHER | 0,31mm |
| 6 | K21.06038 | 389 261 0665 | (389 261 0865) | 1 | YAĞ TUTUCU DİSK | OIL BAFFLE | 75X16mm |
| 7 | K21.03509 | 019 997 0547 | (023 997 7847) | 1 | PRİZDİREK KEÇESİ | OIL SEAL | 56X72X8mm |
| 8 | K21.06636 | 015 997 4048 | (020 997 8748) | 1 | PRİZDİREK KEÇE KAPAK ORİNGİ | O-RING | 5X3mm |
| 9 | K21.06635 | 020 997 7848 | | 1 | PRİZDİREK KEÇE KAPAK ORİNGİ | O-RING | 138X3mm |
| 10 | K21.06637 | 019 997 8348 | (020 997 7948) | 1 | PRİZDİREK KEÇE KAPAK ORİNGİ | O-RING | 14X4mm |

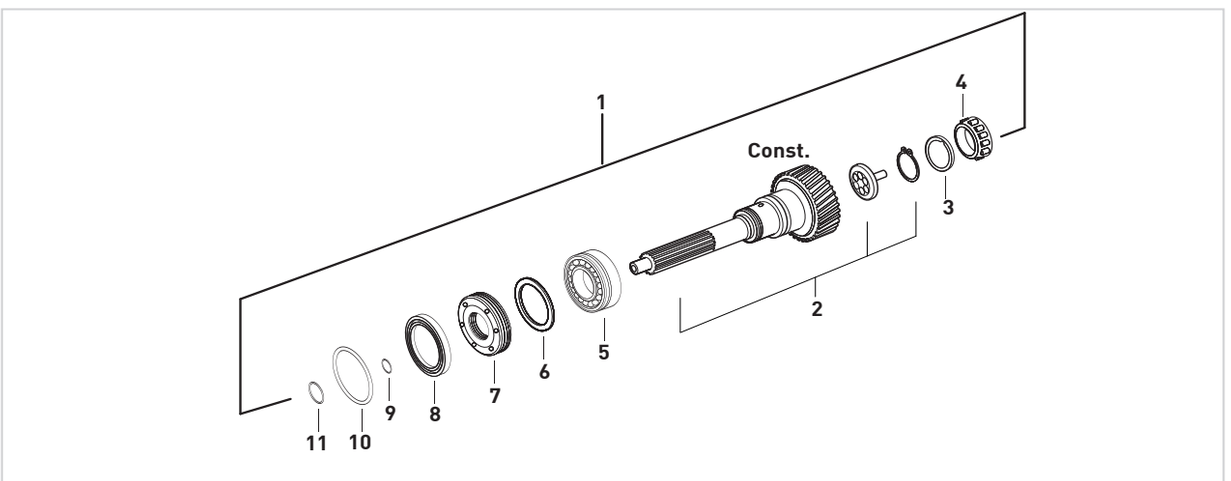


| Fig. | Kacmaz No. | Oem No | Oem Old No | Pcs. | Ürün Tanımı | Description | Sizes |
|---|---|---|---|---|---|---|---|
| 1 | K21.03854 | 655 260 0220 01 | | Kit | PRİZDİREK KOMPLE (BİLYALI) | INPUT SHAFT COMPLETE (WITH BEARING) | |
| 2 | K21.06088 | 656 262 6882 | (656 262 2882) | 1 | PRİZDİREK 26 DİŞ | INPUT SHAFT 26 T. | |
| 3 | K21.03539 | 017 997 9947 | (018 997 7347) | 1 | PRİZDİREK ARKA KEÇE | OIL SEAL | 75X94X11,5mm |
| 4 | K21.03619 | 015 981 1605 | (013 981 1105) | 1 | KAMALI MİL UÇ BİLYA | ROLLER BEARING | 39,69X40,39mm |
| 5 | K21.03618 | 011 981 1305 | (014 981 9005) | 1 | PRİZDİREK ÖN BİLYA | ROLLER BEARING | 75X140X34,25mm |
| 6 | K21.04162 | 389 262 4152 | (389 262 0955) | 1 | PRİZDİREK AYAR RAYNELİ | THRUST WASHER | 0,10mm |
| 6 | K21.06715 | 389 262 3055 | | 1 | PRİZDİREK AYAR RAYNELİ | THRUST WASHER | 0,25mm |
| 6 | K21.04221 | 389 262 3255 | | 1 | PRİZDİREK AYAR RAYNELİ | THRUST WASHER | 0,31mm |
| 7 | K21.06038 | 389 261 0665 | (389 261 0865) | 1 | YAĞ TUTUCU DİSK | OIL BAFFLE | 75X16mm |
| 8 | K21.03509 | 019 997 0547 | (023 997 7847) | 1 | PRİZDİREK KEÇESİ | OIL SEAL | 56X72X8mm |
| 9 | K21.06636 | 015 997 4048 | (020 997 8748) | 1 | PRİZDİREK KEÇE KAPAK ORİNGİ | O-RING | 5X3mm |
| 10 | K21.06635 | 020 997 7848 | | 1 | PRİZDİREK KEÇE KAPAK ORİNGİ | O-RING | 138X3mm |
| 11 | K21.06637 | 019 997 8348 | (020 997 7948) | 1 | PRİZDİREK KEÇE KAPAK ORİNGİ | O-RING | 14X4mm |



**Original parts names, oem numbers, symbols and descriptions used in this catalogue are for reference purposes only.**

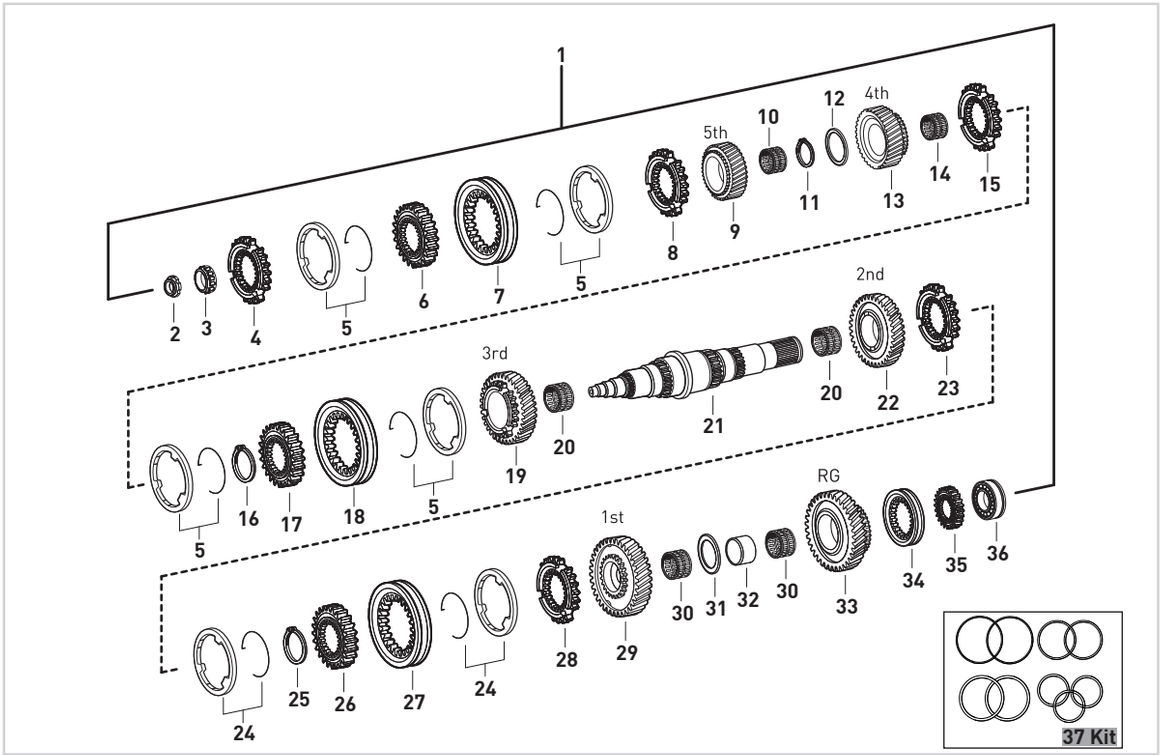


| Fig. | Kacmaz No. | Oem No | Oem Old No | Pcs. | Ürün Tanımı | Description | Sizes |
|---|---|---|---|---|---|---|---|
| 1 | K21.06347 | | | kit | KAMALI MİL KOMPLE | MAIN SHAFT COMPLETE | |
| 2 | K21.03432 | 945 990 0250 | (945 990 0150) | 1 | KAMALI MİL SOMUNU | NUT | M30X1,5 |
| 3 | K21.03619 | 015 981 1605 | (013 981 1105) | 1 | KAMALI MİL UÇ BİLYA | ROLLER BEARING | 39,69X40,39mm |
| 4 | K21.06103 | 389 262 9734 | | 1 | PRİZDİREK SENKROMENÇ | ENGAGING RING | |
| 5 | K21.03015 | 389 262 0637 | (387 262 0837) | 4 | PRİZ.VE 3./4./5.VİTES FRENLEME (Mo) | SYNCHRONIZING CONE / Mo | |
| 6 | K21.06104 | 389 262 5335 | | 1 | PRİZDİREK VE 5.VİTES YILDIZ DİŞLİ | SYNCHRONIZER HUB | |
| 7 | K21.03002 | 945 262 2823 | (945 262 0323) | 1 | PRİZDİREK VE 5.VİTES HALKA | ENGAGING SLEEVE | |
| 8 | K21.06108 | 389 262 9834 | | 1 | 5.VİTES SENKROMENÇ | ENGAGING RING | |
| 9 | K21.06109 | 389 262 1615 | (389 262 0415) | 1 | 5.VİTES DİŞLİSİ 30 DİŞ | GEAR 5th 30 T. | |
| 10 | K21.03833 | 019 981 6010 | (019 981 5810) | 1 | 5.VİTES MASURA BİLYA | NEEDLE CAGE | 60X68X54mm |
| 11 | K21.06908 | 389 262 3973 | | 1 | 4./5.VİTES ARA SEKMANI | RETANING RING | 2,75mm |
| 12 | K21.04143 | 389 262 1862 | | 1 | 4./5.VİTES ARA PULU | THRUST WASHER | |
| 13 | K21.03247 | 389 262 0814 | (389 262 0114) | 1 | 4.VİTES DİŞLİSİ 35 DİŞ | GEAR 4th 35 T. | |
| 14 | K21.03803 | 009 981 1510 | (017 981 7810) | 1 | 4.VİTES MASURA BİLYA | NEEDLE CAGE | 78X86X35mm |
| 15 | K21.06111 | 945 262 5034 | (389 262 5734) | 1 | 4.VİTES SENKROMENÇ | ENGAGING RING | |
| 16 | K21.06924 | 389 262 0373 | | 1 | 3./4.VİTES YILDIZ DİŞLİ SEKMANI | RETANING RING | 3,00mm |
| 17 | K21.06112 | 389 262 4435 | | 1 | 3./4.VİTES YILDIZ DİŞLİ | SYNCHRONIZER HUB | |
| 18 | K21.06106 | 389 262 2023 | | 1 | 3./4.VİTES HALKA | ENGAGING SLEEVE | |
| 19 | K21.06114 | 656 262 4413 | (389 262 3513) | 1 | 3.VİTES DİŞLİSİ 40 DİŞ | GEAR 3rd 40 T. | |
| 20 | K21.03845 | 008 981 8610 | (007 981 5510) | 2 | 2./3.VİTES MASURA BİLYA | NEEDLE CAGE | 92X100X49,5mm |
| 21 | K21.06115 | 656 262 0805 | (389 262 4605) | 1 | KAMALI MİL | MAIN SHAFT | |
| 22 | K21.03254 | 976 262 1612 | (389 262 2712) | 2 | 2.VİTES DİŞLİSİ 45 DİŞ | GEAR 2nd 45 T. | |
| 23 | K21.06118 | 945 262 4934 | (389 262 8334) | 1 | 2.VİTES SENKROMENÇ | ENGAGING RING | |
| 24 | K21.03016 | 389 262 0737 | (387 262 0937) | 2 | 1./2.VİTES FRENLEME (Mo) | SYNCHRONIZING CONE / Mo | |
| 25 | K21.06906 | 387 262 4373 | | 1 | 1./2.VİTES ARA SEKMANI | RETANING RING | 3,00mm |
| 26 | K21.06119 | 389 262 5635 | (389 262 3335) | 1 | 1./2.VİTES YILDIZ DİŞLİ | SYNCHRONIZER HUB | |
| 27 | K21.06121 | 389 262 2123 | | 1 | 1./2.VİTES HALKA | ENGAGING SLEEVE | |
| 28 | K21.06123 | 945 262 4834 | (389 262 8234) | 1 | 1.VİTES SENKROMENÇ | ENGAGING RING | |
| 29 | K21.06124 | 656 262 0211 | (389 262 3311) | 1 | 1.VİTES DİŞLİSİ 50 DİŞ | GEAR 1st 50 T. | |
| 30 | K21.03847 | 021 981 9410 | (019 981 6210) | 2 | 1.VE GERİ VİTES MASURA BİLYA | NEEDLE CAGE | 85X93X45mm |
| 31 | K21.04284 | 389 262 2855 | | 1 | 1.VİTES MESAFE AYAR PULU | THRUST WASHER | 5,50mm |
| 32 | K21.06125 | 389 262 2250 | (389 262 2450) | 1 | 1.VİTES MASURA BİLYA ÇANAĞI | BEARING RACE | |
| 33 | K21.06126 | 389 262 2233 | (389 262 2733) | 1 | GERİ VİTES DİŞLİSİ 47 DİŞ | REVERSE GEAR 47 T. | |
| 34 | K21.03060 | 389 262 1723 | (389 262 0023) | 1 | GERİ VİTES HALKASI | ENGAGING SLEEVE | |
| 35 | K21.06128 | 945 262 7035 | (389 262 4135) | 1 | GERİ VİTES YILDIZ DİŞLİ | SYNCHRONIZER HUB | |
| 36 | K21.03658 | 012 981 3705 | (018 981 6705) | 1 | KAMALI MİL ARKA BİLYA | ROLLER BEARING | 65X140X13,5mm |
| 37 | K21.04329 | | | Kit | RAYNEL TAKIMI | THRUST WASHER KIT | |



Original parts names, oem numbers, symbols and descriptions used in this catalogue are for reference purposes only.

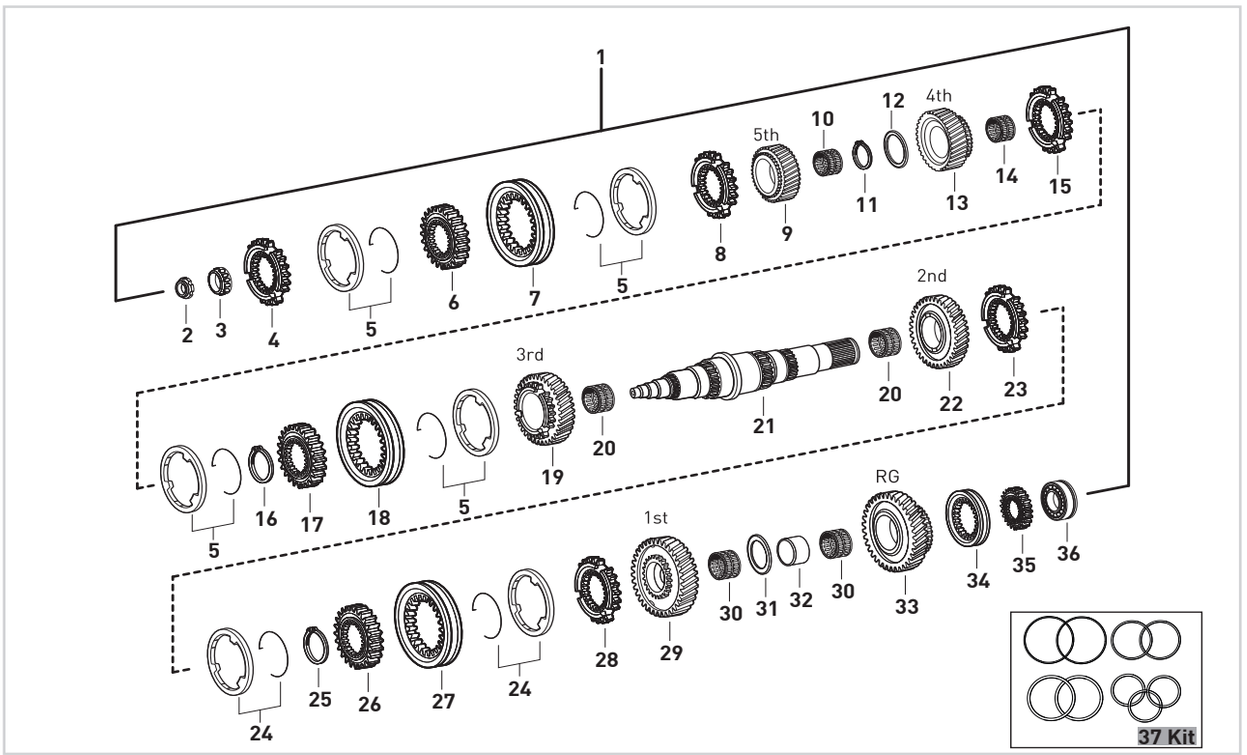


| Fig. | Kacmaz No. | Oem No | Oem Old No | Pcs. | Ürün Tanımı | Description | Sizes |
|---|---|---|---|---|---|---|---|
| 1 | K21.06348 | | | kit | KAMALI MİL KOMPLE | MAIN SHAFT COMPLETE | |
| 2 | K21.03432 | 945 990 0250 | (945 990 0150) | 1 | KAMALI MİL SOMUNU | NUT | M30X1,5 |
| 3 | K21.03619 | 015 981 1605 | (013 981 1105) | 1 | KAMALI MİL UÇ BİLYA | ROLLER BEARING | 39,69X40,39mm |
| 4 | K21.06102 | 945 262 7234 | | 1 | PRİZDİREK SENKROMENÇ | ENGAGING RING | |
| 5 | K21.03136 | 945 260 2245 | (946 262 6337) | 4 | PRİZ./5./4./3.VİTES FRENLEME (Mo) | SYNCHRONIZING CONE / Mo | |
| 6 | K21.06104 | 389 262 5335 | | 1 | PRİZDİREK VE 5.VİTES YILDIZ DİŞLİ | SYNCHRONIZER HUB | |
| 7 | K21.03137 | 945 262 6823 | (945 262 6423) | 1 | PRİZDİREK VE 5.VİTES HALKA | ENGAGING SLEEVE | |
| 8 | K21.06107 | 945 262 7134 | | 1 | 5.VİTES SENKROMENÇ | ENGAGING RING | |
| 9 | K21.06109 | 389 262 1615 | (389 262 0415) | 1 | 5.VİTES DİŞLİSİ 30 DİŞ | GEAR 5th 30 T. | |
| 10 | K21.03833 | 019 981 6010 | (019 981 5810) | 1 | 5.VİTES MASURA BİLYA | NEEDLE CAGE | 60X68X54mm |
| 11 | K21.06908 | 389 262 3973 | | 1 | 4./5.VİTES ARA SEKMANI | RETANING RING | 2,75mm |
| 12 | K21.04143 | 389 262 1862 | | 1 | 4./5.VİTES ARA PULU | THRUST WASHER | |
| 13 | K21.03247 | 389 262 0814 | (389 262 0114) | 1 | 4.VİTES DİŞLİSİ 35 DİŞ | GEAR 4th 35 T. | |
| 14 | K21.03803 | 009 981 1510 | (017 981 7810) | 1 | 4.VİTES MASURA BİLYA | NEEDLE CAGE | 78X86X35mm |
| 15 | K21.06110 | 945 262 6134 | | 1 | 4.VİTES SENKROMENÇ | ENGAGING RING | |
| 16 | K21.06924 | 389 262 0373 | | 1 | 3./4.VİTES YILDIZ DİŞLİ SEKMANI | RETANING RING | 3,00mm |
| 17 | K21.06112 | 389 262 4435 | | 1 | 3./4.VİTES YILDIZ DİŞLİ | SYNCHRONIZER HUB | |
| 18 | K21.06105 | 945 262 5723 | | 1 | 3./4.VİTES SENK.HALKA | ENGAGING SLEEVE | |
| 19 | K21.06113 | 945 262 6417 | | 1 | 3.VİTES DİŞLİSİ 40 DİŞ | GEAR 3rd 40 T. | |
| 20 | K21.03845 | 008 981 8610 | (007 981 5510) | 2 | 2./3.VİTES MASURA BİLYA | NEEDLE CAGE | 92X100X49,5mm |
| 21 | K21.06115 | 656 262 0805 | (389 262 4605) | 1 | KAMALI MİL | MAIN SHAFT | |
| 22 | K21.03254 | 976 262 1612 | (389 262 2712) | 2 | 2.VİTES DİŞLİSİ 45 DİŞ | GEAR 2nd 45 T. | |
| 23 | K21.06117 | 945 262 6034 | | 1 | 2.VİTES SENKROMENÇ | ENGAGING RING | |
| 24 | K21.03148 | 947 260 1945 | (947 260 4645) | 2 | 1./2.VİTES FRENLEME (Mo) | SYNCHRONIZING CONE / Mo | |
| 25 | K21.06922 | 387 262 4573 | | 1 | 1./2.VİTES YILDIZ DİŞLİ SEKMANI | RETANING RING | 3,10mm |
| 26 | K21.06119 | 389 262 5635 | (389 262 3335) | 1 | 1./2.VİTES YILDIZ DİŞLİ | SYNCHRONIZER HUB | |
| 27 | K21.06120 | 945 262 5623 | | 1 | 1./2.VİTES SENK.HALKA | ENGAGING SLEEVE | |
| 28 | K21.06122 | 945 262 5934 | | 1 | 1.VİTES SENKROMENÇ | ENGAGING RING | |
| 29 | K21.06124 | 656 262 0211 | (389 262 3311) | 1 | 1.VİTES DİŞLİSİ 50 DİŞ | GEAR 1st 50 T. | |
| 30 | K21.03847 | 021 981 9410 | (019 981 6210) | 2 | 1.VE GERİ VİTES MASURA BİLYA | NEEDLE CAGE | 85X93X45mm |
| 31 | K21.04284 | 389 262 2855 | | 1 | 1.VİTES MESAFE AYAR PULU | THRUST WASHER | 5,50mm |
| 32 | K21.06125 | 389 262 2250 | (389 262 2450) | 1 | 1.VİTES MASURA BİLYA ÇANAĞI | BEARING RACE | |
| 33 | K21.06126 | 389 262 2233 | (389 262 2733) | 1 | GERİ VİTES DİŞLİSİ 47 DİŞ | REVERSE GEAR 47 T. | |
| 34 | K21.03060 | 389 262 1723 | (389 262 0023) | 1 | GERİ VİTES HALKASI | ENGAGING SLEEVE | |
| 35 | K21.06128 | 945 262 7035 | (389 262 4135) | 1 | GERİ VİTES YILDIZ DİŞLİ | SYNCHRONIZER HUB | |
| 36 | K21.03658 | 012 981 3705 | (018 981 6705) | 1 | KAMALI MİL ARKA BİLYA | ROLLER BEARING | 65X140X13,5mm |
| 37 | K21.04329 | | | Kit | RAYNEL TAKIMI | THRUST WASHER KIT | |



**Original parts names, oem numbers, symbols and descriptions used in this catalogue are for reference purposes only.**

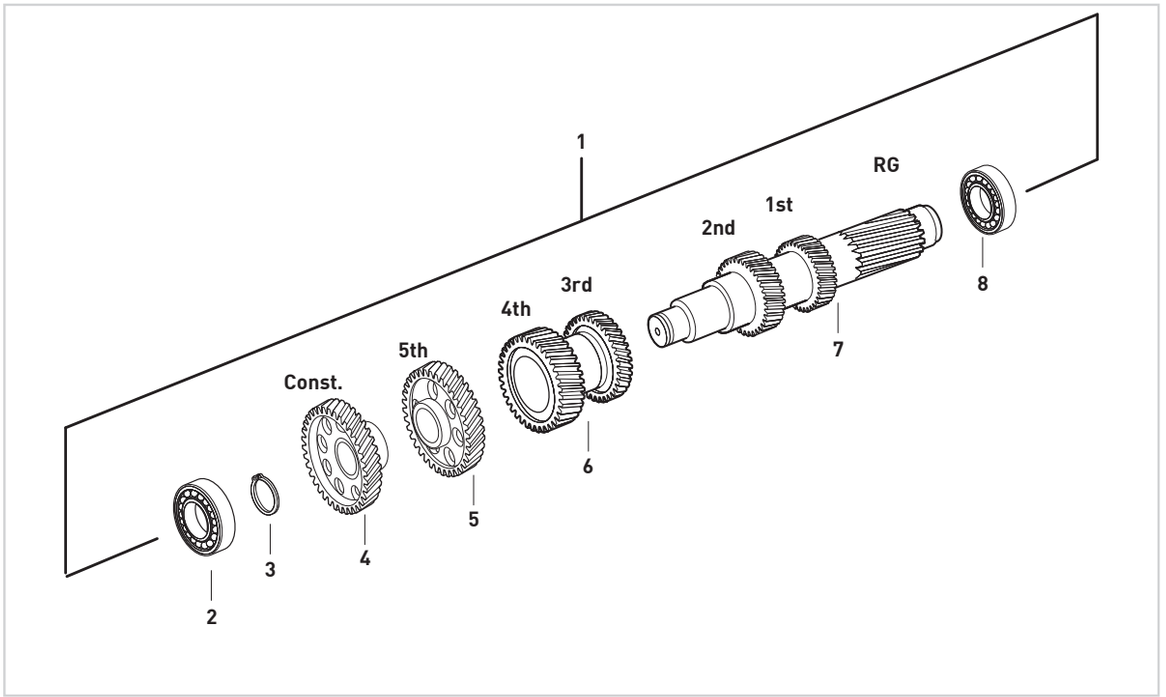


| Fig. | Kacmaz No. | Oem No | Oem Old No | Pcs. | Ürün Tanımı | Description | Sizes |
|---|---|---|---|---|---|---|---|
| 1 | K21.06337 | | | Kit | GRUP MİLİ KOMPLE | COUNTER SHAFT COMPLETE | |
| 2 | K21.03606 | 015 981 9005 | (014 981 1405) | 1 | GRUP MİLİ ÖN BİLYA | ROLLER BEARING | 50,8X100X35mm |
| 3 | K21.06426 | 900055 060300 | (000 264 5351) | 1 | GRUP MİLİ ÖN BİLYA SEKMANI | RETAINING RING | 3,00mm |
| 4 | K21.06139 | 389 263 2910 | (389 263 2110) | 1 | PRİZDİREK DİŞLİ KARŞILIĞI 51 DİŞ | CONSTANT GEAR 51 T. | |
| | | | (389 263 2510) | | | | |
| 5 | K21.06140 | 389 263 0915 | (389 263 0415) | 1 | 5.VİTES DİŞLİ KARŞILIĞI 47 DİŞ | GEAR 5th 47 T. | |
| | | | (389 263 0815) | | | | |
| 6 | K21.06141 | 656 263 0013 | (389 263 2713) | 1 | 3./4.VİT.DİŞLİ KARŞILIĞI 28/38 DİŞ | DOUBLE GEAR 3rd/4th 28/38 T. | |
| | | | (389 263 2813) | | | | |
| | | | (389 263 3013) | | | | |
| 7 | K21.06142 | 389 263 3402 | (389 263 2102) | 1 | GRUP MİLİ 12/19 DİŞ | COUNTER SHAFT 12/19 T. | |
| | | | (389 263 2302) | | | | |
| 8 | K21.03660 | 012 981 3605 | (015 981 4105) | 1 | GRUP MİLİ ARKA BİLYA | ROLLER BEARING | 45X110X12mm |



Original parts names, oem numbers, symbols and descriptions used in this catalogue are for reference purposes only.

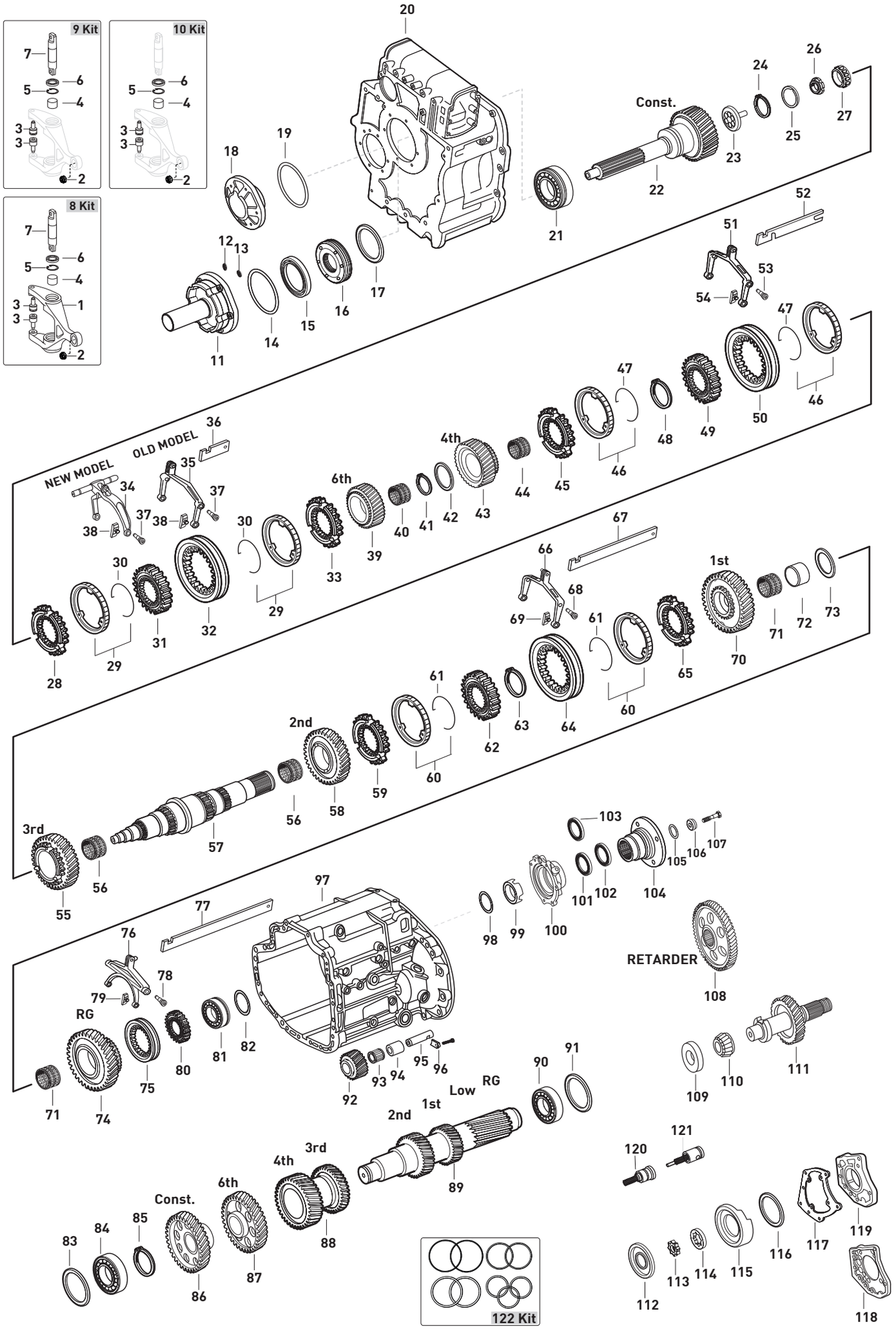




Original parts names, oem numbers, symbols and descriptions used in this catalogue are for reference purposes only.

| Fig. | Kacmaz No | Oem No | Oem Old No | Pcs. | Ürün Tanımı | Description | Sizes | Not | 714140 | 714143 | 714145 | 714160 | 714161 |
|---|---|---|---|---|---|---|---|---|---|---|---|---|---|
| 1 | K21.07042 | 656 250 0613 | (656 250 0813) | kit | DEBRİYAJ ÇATALI BOŞ | RELEASE FORK EMPTY | | | ♦ | ♦ | ♦ | ♦ | ♦ |
| 2 | K21.07040 | 000 254 0335 | | 1 | DEBRİYAJ ÇATAL PLASTİK TAPASI | PLASTIC BUSHING | | | ♦ | ♦ | ♦ | ♦ | ♦ |
| 3 | K21.07038 | 000 254 0017 | | 2 | DEBRİYAJ ÇATAL BURÇ VE PİMİ | CAM ROLLER | | | ♦ | ♦ | ♦ | ♦ | ♦ |
| 4 | | 002 992 9301 | | 2 | DEBRİYAJ ÇATAL MİL BURCU | BUSHING | | | ♦ | ♦ | ♦ | ♦ | ♦ |
| 5 | | 912009 037200 | | 2 | DEBRİYAJ ÇATAL MİL SEKMANI | RETAINING RING | | | ♦ | ♦ | ♦ | ♦ | ♦ |
| 6 | | 025 997 2347 | (025 997 2247) | 2 | DEBRİYAJ ÇATAL MİL KEÇESİ | OIL SEAL | | | ♦ | ♦ | ♦ | ♦ | ♦ |
| 7 | | 656 254 0506 | (389 254 0006) | 1 | DEBRİYAJ ÇATAL MİLİ | SHAFT | | | ♦ | ♦ | ♦ | ♦ | ♦ |
| 8 | K21.07041 | | | kit | DEBRİYAJ ÇATALI KOMPLE | RELEASE FORK COMPLETE | | | ♦ | ♦ | ♦ | ♦ | ♦ |
| 9 | K21.07043 | | | kit | DEBRİYAJ ÇATALI TAMİR TAKIMI | RELEASE FORK REPAIR KIT | | | ♦ | ♦ | ♦ | ♦ | ♦ |
| 10 | K21.07044 | | | kit | DEBRİYAJ ÇATALI TAMİR TK.MİLSİZ | RELEASE FORK REPAIR KIT | | W/OUT SHAFT | ♦ | ♦ | ♦ | ♦ | ♦ |
| 11 | K21.06082 | 656 261 0018 | | 1 | PRİZDİREK KEÇE KAPAĞI | COVER | | | ♦ | ♦ | ♦ | ♦ | ♦ |
| 11 | | 389 261 6618 | | 1 | PRİZDİREK KEÇE KAPAĞI | COVER | | | ♦ | | | ♦ | |
| 11 | | 389 261 6218 | | 1 | PRİZDİREK KEÇE KAPAĞI | COVER | | | ♦ | | | ♦ | |
| 12 | K21.06637 | 019 997 8348 | (020 997 7948) | 1 | PRİZDİREK KEÇE KAPAK ORİNGİ | O-RING | 14X4mm | | ♦ | ♦ | ♦ | ♦ | ♦ |
| 13 | K21.06636 | 015 997 4048 | (020 997 8748) | 1 | PRİZDİREK KEÇE KAPAK ORİNGİ | O-RING | 5X3mm | | ♦ | ♦ | ♦ | ♦ | ♦ |
| 14 | K21.06635 | 020 997 7848 | | 1 | PRİZDİREK KEÇE KAPAK ORİNGİ | O-RING | 138X3mm | | ♦ | ♦ | ♦ | ♦ | ♦ |
| 14 | K21.06712 | 028 997 2248 | (019 997 7248) | 1 | PRİZDİREK KEÇE KAPAK ORİNGİ | O-RING | 140X3mm | | ♦ | | | ♦ | |
| 15 | K21.03509 | 019 997 0547 | (023 997 7847) | 1 | PRİZDİREK KEÇESİ | OIL SEAL | 56X72X8mm | | ♦ | ♦ | ♦ | ♦ | ♦ |
| | | | (019 997 0647) | | | | | | | | | | |
| | | | (022 997 8547) | | | | | | | | | | |
| 16 | K21.06038 | 389 261 0665 | (389 261 0765) | 1 | YAĞ TUTUCU DİSK | OIL BAFFLE | 75X16mm | | ♦ | ♦ | ♦ | ♦ | ♦ |
| | | | (389 261 0865) | | | | | | | | | | |
| 17 | K21.04162 | 389 262 4152 | (389 262 0955) | 1 | PRİZDİREK AYAR RAYNELİ | THRUST WASHER | 0,10mm | | ♦ | ♦ | ♦ | ♦ | ♦ |
| 17 | K21.04243 | 389 262 0855 | | 1 | PRİZDİREK AYAR RAYNELİ | THRUST WASHER | 0,15mm | | ♦ | ♦ | ♦ | ♦ | ♦ |
| 17 | K21.04151 | 389 262 0755 | | 1 | PRİZDİREK AYAR RAYNELİ | THRUST WASHER | 0,20mm | | ♦ | ♦ | ♦ | ♦ | ♦ |
| 17 | K21.06715 | 389 262 3055 | | 1 | PRİZDİREK AYAR RAYNELİ | THRUST WASHER | 0,25mm | | ♦ | ♦ | ♦ | ♦ | ♦ |
| 17 | K21.04221 | 389 262 3255 | | 1 | PRİZDİREK AYAR RAYNELİ | THRUST WASHER | 0,31mm | | ♦ | ♦ | ♦ | ♦ | ♦ |
| 17 | K21.04163 | 389 262 3555 | (389 262 0655) | 1 | PRİZDİREK AYAR RAYNELİ | THRUST WASHER | 0,40mm | | ♦ | ♦ | ♦ | ♦ | ♦ |
| | | | (389 262 4452) | | | | | | | | | | |
| 17 | K21.04164 | 389 262 3755 | (389 262 1954) | 1 | PRİZDİREK AYAR RAYNELİ | THRUST WASHER | 0,46mm | | ♦ | ♦ | ♦ | ♦ | ♦ |
| 17 | K21.04246 | 389 262 3855 | | 1 | PRİZDİREK AYAR RAYNELİ | THRUST WASHER | 0,49mm | | ♦ | ♦ | ♦ | ♦ | ♦ |
| 17 | K21.04250 | 389 262 4055 | (389 262 0155) | 1 | PRİZDİREK AYAR RAYNELİ | THRUST WASHER | 0,55mm | | ♦ | ♦ | ♦ | ♦ | ♦ |
| | | | (389 262 2154) | | | | | | | | | | |
| 17 | K21.04167 | 389 262 4255 | (389 262 2254) | 1 | PRİZDİREK AYAR RAYNELİ | THRUST WASHER | 0,61mm | | ♦ | ♦ | ♦ | ♦ | ♦ |
| 17 | K21.04168 | 389 262 4355 | (389 262 2354) | 1 | PRİZDİREK AYAR RAYNELİ | THRUST WASHER | 0,64mm | | ♦ | ♦ | ♦ | ♦ | ♦ |
| 17 | K21.04169 | 389 262 4555 | (389 262 2454) | 1 | PRİZDİREK AYAR RAYNELİ | THRUST WASHER | 0,70mm | | ♦ | ♦ | ♦ | ♦ | ♦ |
| 17 | K21.04170 | 389 262 4755 | (389 262 2554) | 1 | PRİZDİREK AYAR RAYNELİ | THRUST WASHER | 0,76mm | | ♦ | ♦ | ♦ | ♦ | ♦ |
| 17 | K21.04281 | 389 262 4855 | (389 262 0555) | 1 | PRİZDİREK AYAR RAYNELİ | THRUST WASHER | 0,79mm | | ♦ | ♦ | ♦ | ♦ | ♦ |
| 17 | K21.04282 | 389 262 5555 | | 1 | PRİZDİREK AYAR RAYNELİ | THRUST WASHER | 1,00mm | | ♦ | ♦ | ♦ | ♦ | ♦ |
| 17 | K21.04171 | 389 262 9654 | (389 262 2654) | 1 | PRİZDİREK AYAR RAYNELİ | THRUST WASHER | 2,00mm | | ♦ | ♦ | ♦ | ♦ | ♦ |
| 18 | | 389 261 1933 | (389 261 0633) | 1 | GRUP MİLİ ÖN BİLYA KAPAĞI | COVER | | (K) | ♦ | ♦ | ♦ | ♦ | ♦ |
| | | | (389 262 0133) | | | | | | | | | | |
| 18 | | 976 261 1833 | (976 261 1733) | 1 | GRUP MİLİ ÖN BİLYA KAPAĞI | COVER | | (L) | ♦ | ♦ | ♦ | ♦ | ♦ |
| | | | (976 261 1633) | | | | | | | | | | |
| 19 | | 022 997 4048 | (022 997 3448) | 1 | GRUP MİLİ BİLYA KAPAK ORİNGİ | O-RING | 103X2mm | (K) | ♦ | ♦ | ♦ | ♦ | ♦ |
| 19 | K21.06533 | 028 997 2348 | (004 997 2248) | 1 | GRUP MİLİ BİLYA KAPAK ORİNGİ | O-RING | 100X3mm | (L) | ♦ | ♦ | ♦ | ♦ | ♦ |
| 20 | | 389 261 0101 | | 1 | ŞANZIMAN ÖN GÖVDE | HOUSING | | | ♦ | | | ♦ | |
| 20 | | 389 261 3101 | | 1 | ŞANZIMAN ÖN GÖVDE | HOUSING | | | ♦ | | | ♦ | |
| 20 | | 389 261 3201 | | 1 | ŞANZIMAN ÖN GÖVDE | HOUSING | | | ♦ | | | ♦ | |
| 20 | | 656 260 7012 | | 1 | ŞANZIMAN ÖN GÖVDE | HOUSING | | | ♦ | ♦ | ♦ | ♦ | ♦ |
| 20 | | 656 260 7112 | | 1 | ŞANZIMAN ÖN GÖVDE | HOUSING | | | ♦ | | | ♦ | |
| 21 | K21.03618 | 011 981 1305 | (014 981 9005) | 1 | PRİZDİREK ÖN BİLYA | ROLLER BEARING | 75X140X34,25mm | | ♦ | ♦ | ♦ | ♦ | ♦ |
| | | | (008 981 8605) | | | | | | | | | | |
| | | | (008 981 2605) | | | | | | | | | | |
| | | | (008 981 3205) | | | | | | | | | | |

NOTES :
Parts encoded alphabetic and numaric are used together.
GEARBOX TYPE:
714140 - GO210 - 6 / 6,5 - 0,8
714143 - GO210 - 6E / 6,53 - 0,72
714145 - GO210 - 6 / 6,53 - 0,72
714160 - GO230 - 6 / 6,5 - 0,8
714161 - GO230 - 6E / 6,53 - 0,72

NOTLAR :
Alfabetik ve rakam ile kodlanan parçalar birlikte kullanılır.
ŞANZIMAN TİPLERİ :
714140 - GO210 - 6 / 6,5 - 0,8
714143 - GO210 - 6E / 6,53 - 0,72
714145 - GO210 - 6 / 6,53 - 0,72
714160 - GO230 - 6 / 6,5 - 0,8
714161 - GO230 - 6E / 6,53 - 0,72

Original parts names, oem numbers, symbols and descriptions used in this catalogue are for reference purposes only.

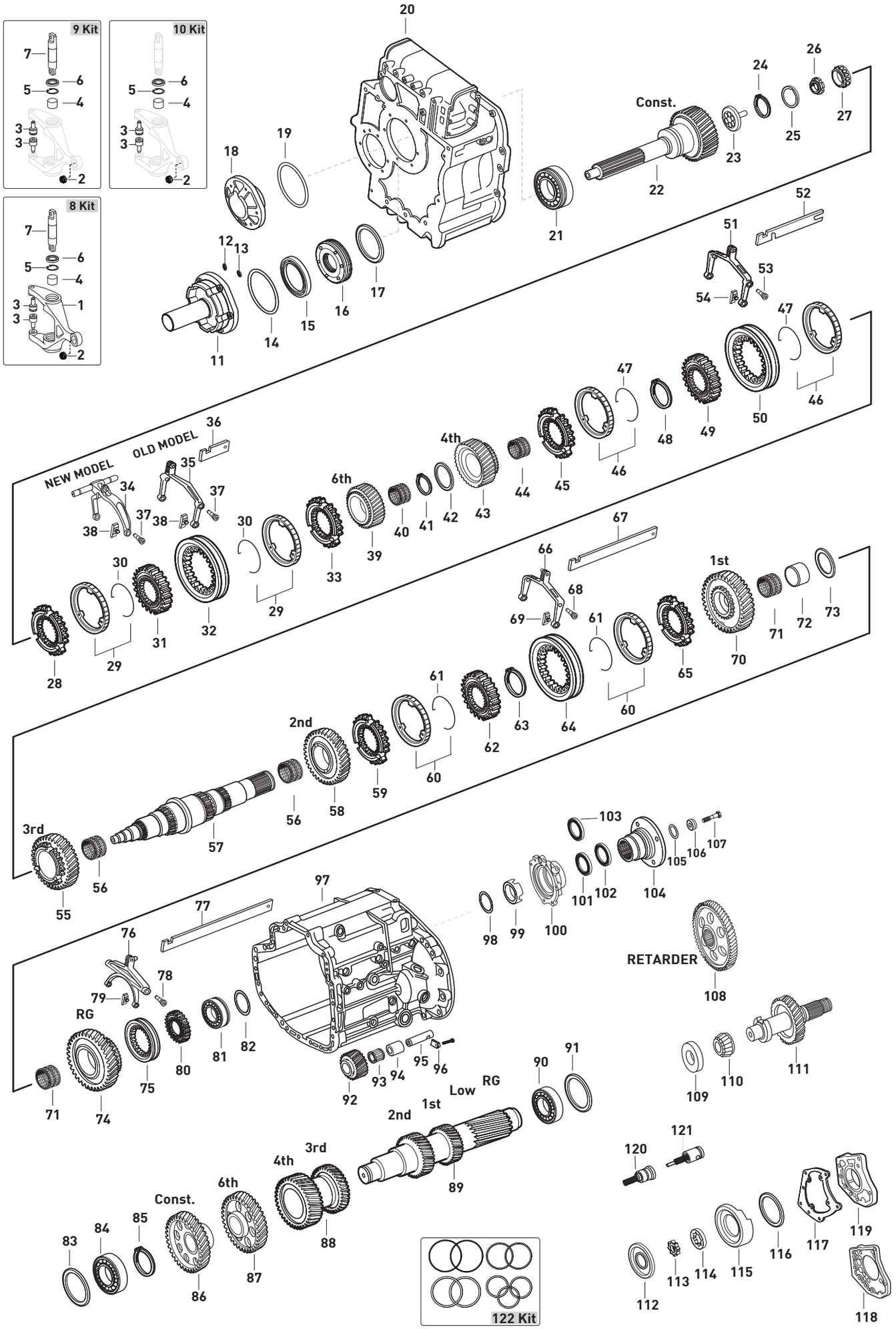




Original parts names, oem numbers, symbols and descriptions used in this catalogue are for reference purposes only.

| Fig. | Kacmaz No | Oem No | Oem Old No | Pcs. | Ürün Tanımı | Description | Sizes | Not | 714140 | 714143 | 714145 | 714160 | 714161 |
|---|---|---|---|---|---|---|---|---|---|---|---|---|---|
| 22 | K21.06155 | 656 262 6082 | (389 262 6602) | 1 | PRİZDİREK 30 DİŞ | INPUT SHAFT 30 T. | | (1) | ♦ | ♦ | ♦ | ♦ | ♦ |
| | | | (656 262 6102) | | | | | | | | | | |
| | | | (389 262 6502) | | | | | | | | | | |
| | | | (656 262 3282) | | | | | | | | | | |
| 22 | | 656 262 6282 | | 1 | PRİZDİREK | INPUT SHAFT | | (2) | | ♦ | | | |
| 22 | K21.06683 | 656 262 9282 | (656 262 4982) | 1 | PRİZDİREK 30 DİŞ | INPUT SHAFT 30 T. | | (3) | ♦ | ♦ | ♦ | ♦ | ♦ |
| 22 | K21.06720 | 656 262 9582 | (656 262 8082) | 1 | PRİZDİREK 30 DİŞ | INPUT SHAFT 30 T. | | (4) | | ♦ | | | ♦ |
| | | | (656 262 9682) | | | | | | | | | | |
| 23 | K21.04001 | 976 269 0034 | (960 269 0434) | 1 | PRİZDİREK YAĞ PİPETİ | OIL COLLECTOR | | | ♦ | ♦ | ♦ | ♦ | ♦ |
| 24 | K21.04002 | 000 994 9841 | | 1 | PRİZDİREK YAĞ PİPET SEKMANI | RETAINING RING | | | ♦ | ♦ | ♦ | ♦ | ♦ |
| 25 | K21.03539 | 017 997 9947 | (018 997 7347) | 1 | PRİZDİREK ARKA KEÇE | OIL SEAL | 75X94X11,50mm | (1)(2) | ♦ | ♦ | ♦ | ♦ | ♦ |
| | | | (018 997 4947) | | | | | | | | | | |
| 25 | | 001 262 1762 | (001 262 1662) | 1 | PRİZDİREK ARKA KEÇE | OIL SEAL | | (3)(4) | | ♦ | | ♦ | ♦ |
| 26 | K21.03432 | 945 990 0250 | (945 990 0150) | 1 | KAMALI MİL SOMUNU | NUT | M30X1,5 | | ♦ | ♦ | ♦ | ♦ | ♦ |
| 27 | K21.03619 | 015 981 1605 | (013 981 1105) | 1 | KAMALI MİL UÇ BİLYA | ROLLER BEARING | 39,69X40,39mm | (1)(2) | ♦ | ♦ | ♦ | ♦ | ♦ |
| 27 | K21.03634 | 015 981 1705 | (014 981 8805) | 1 | KAMALI MİL UÇ BİLYA | ROLLER BEARING | 39,7X43,1mm | (3)(4) | ♦ | ♦ | ♦ | ♦ | ♦ |
| | | | (021 981 2205) | | | | | | | | | | |
| | | | (021 981 6105) | | | | | | | | | | |
| 28 | K21.03147 | 945 262 7734 | (945 262 3634) | 1 | PRİZDİREK SENKROMENÇ | ENGAGING RING | | (A) | ♦ | ♦ | ♦ | ♦ | ♦ |
| 28 | K21.03024 | 389 262 5434 | (945 262 0334) | 1 | PRİZDİREK SENKROMENÇ | ENGAGING RING | | (B) | ♦ | | | ♦ | |
| | | | (945 262 0134) | | | | | | | | | | |
| 29 | K21.03136 | 945 260 2245 | (946 262 6337) | 2 | PRİZDİREK VE 6.VİTES FRENLEME (Mo) | SYNCHRONIZING CONE / Mo | | (A) | ♦ | ♦ | ♦ | ♦ | ♦ |
| 29 | K21.03015 | 389 262 0637 | (387 262 0837) | 2 | PRİZDİREK VE 6.VİTES FRENLEME (Mo) | SYNCHRONIZING CONE / Mo | | (B) | ♦ | | | ♦ | |
| | | | (389 262 1037) | | | | | | | | | | |
| 30 | K21.03044 | 387 262 1093 | (387 262 0693) | 2 | FRENLEME TELİ | SPRING | | | ♦ | ♦ | ♦ | ♦ | ♦ |
| | | | (960 262 1393) | | | | | | | | | | |
| 31 | K21.06104 | 389 262 5335 | | 1 | PRİZDİREK VE 6.VİTES YILDIZ DİŞLİ | SYNCHRONIZER HUB | | (5) | ♦ | | | ♦ | |
| 31 | K21.06304 | 656 262 0335 | (656 262 0435) | 1 | PRİZDİREK VE 6.VİTES YILDIZ DİŞLİ | SYNCHRONIZER HUB | | (6)(7) | ♦ | ♦ | ♦ | ♦ | ♦ |
| 32 | K21.03137 | 945 262 6823 | (945 262 6423) | 1 | PRİZDİREK VE 6.VİTES HALKA | ENGAGING SLEEVE | | (A) | ♦ | ♦ | ♦ | ♦ | ♦ |
| 32 | K21.03002 | 945 262 2823 | (945 262 0323) | 1 | PRİZDİREK VE 6.VİTES HALKA | ENGAGING SLEEVE | | (B) | ♦ | | | ♦ | |
| | | | (945 262 0623) | | | | | | | | | | |
| | | | (389 262 4123) | | | | | | | | | | |
| | | | (389 262 2723) | | | | | | | | | | |
| 33 | K21.06107 | 945 262 7134 | | 1 | 6.VİTES SENKROMENÇ | ENGAGING RING | | (A)(5) | ♦ | | | ♦ | |
| 33 | K21.06108 | 389 262 9834 | | 1 | 6.VİTES SENKROMENÇ | ENGAGING RING | | (B)(5) | ♦ | | | ♦ | |
| 33 | K21.06314 | 656 262 0434 | | 1 | 6.VİTES SENKROMENÇ | ENGAGING RING | | (A)(6)(7) | ♦ | ♦ | ♦ | ♦ | ♦ |
| 34 | K21.06412 | 947 260 4330 | (389 260 5730) | 1 | 6.VİTES HİLALİ | SHIFTING FORK 6th | | | ♦ | ♦ | ♦ | ♦ | ♦ |
| | | | (389 260 5930) | | | | | | | | | | |
| | | | (947 260 0031) | | | | | | | | | | |
| 35 | K21.06404 | 389 260 4130 | (389 260 2930) | 1 | 6.VİTES HİLALİ | SHIFTING FORK 6th | | | ♦ | | | ♦ | |
| 35 | | 389 260 6130 | | 1 | 6.VİTES HİLALİ | SHIFTING FORK 6th | | | | ♦ | | | ♦ |
| 36 | | 655 265 0004 | | 1 | 6.VİTES HİLAL ÇITASI | SHIFTING ROD 6th | | | ♦ | ♦ | ♦ | ♦ | ♦ |
| 37 | K21.04307 | 960 265 0774 | (945 265 1274) | 2 | HİLAL CİVATASI | PIN | | | ♦ | ♦ | ♦ | ♦ | ♦ |
| | | | (945 265 2974) | | | | | | | | | | |
| | | | (945 265 2774) | | | | | | | | | | |
| 38 | K21.03431 | 960 265 0049 | (947 265 0349) | 2 | PRİZ./6.VİTES HİLAL PABUCU | SLIDING PAD | | | ♦ | ♦ | ♦ | ♦ | ♦ |
| | | | (389 265 2749) | | | | | | | | | | |
| 39 | K21.06161 | 389 262 0716 | (389 262 0116) | 1 | 6.VİTES DİŞLİSİ 26 DİŞ | GEAR 6th 26 T. | | (5) | ♦ | | | ♦ | |
| | | | (389 262 0416) | | | | | | | | | | |
| | | | (389 262 0816) | | | | | | | | | | |
| 39 | K21.06263 | 656 262 0016 | | 1 | 6.VİTES DİŞLİSİ 24 DİŞ | GEAR 6th 24 T. | | (6) | | ♦ | ♦ | | ♦ |
| 39 | | 656 262 0116 | | 1 | 6.VİTES DİŞLİSİ | GEAR 6th | | (7) | ♦ | ♦ | ♦ | ♦ | ♦ |
| 40 | K21.03833 | 019 981 6010 | (019 981 5810) | 1 | 6.VİTES MASURA BİLYA | NEEDLE CAGE | 60X68X54mm | (5) | ♦ | | | ♦ | |
| 40 | K21.03852 | 023 981 3710 | | 1 | 6.VİTES MASURA BİLYA | NEEDLE CAGE | 60X66X54mm | (6)(7) | ♦ | ♦ | ♦ | ♦ | ♦ |
| 41 | K21.06915 | 389 262 3273 | | 1 | 4./6.VİTES ARA SEKMANI | RETAINING RING | 2,40mm | | ♦ | ♦ | ♦ | ♦ | ♦ |

NOTES :
Parts encoded alphabetic and numaric are used together.
GEARBOX TYPE:
714140 - GO210 - 6 / 6,5 - 0,8
714143 - GO210 - 6E / 6,53 - 0,72
714145 - GO210 - 6 / 6,53 - 0,72
714160 - GO230 - 6 / 6,5 - 0,8
714161 - GO230 - 6E / 6,53 - 0,72

NOTLAR :
Alfabetik ve rakam ile kodlanan parçalar birlikte kullanılır.
ŞANZIMAN TİPLERİ :
714140 - GO210 - 6 / 6,5 - 0,8
714143 - GO210 - 6E / 6,53 - 0,72
714145 - GO210 - 6 / 6,53 - 0,72
714160 - GO230 - 6 / 6,5 - 0,8
714161 - GO230 - 6E / 6,53 - 0,72

Original parts names, oem numbers, symbols and descriptions used in this catalogue are for reference purposes only.

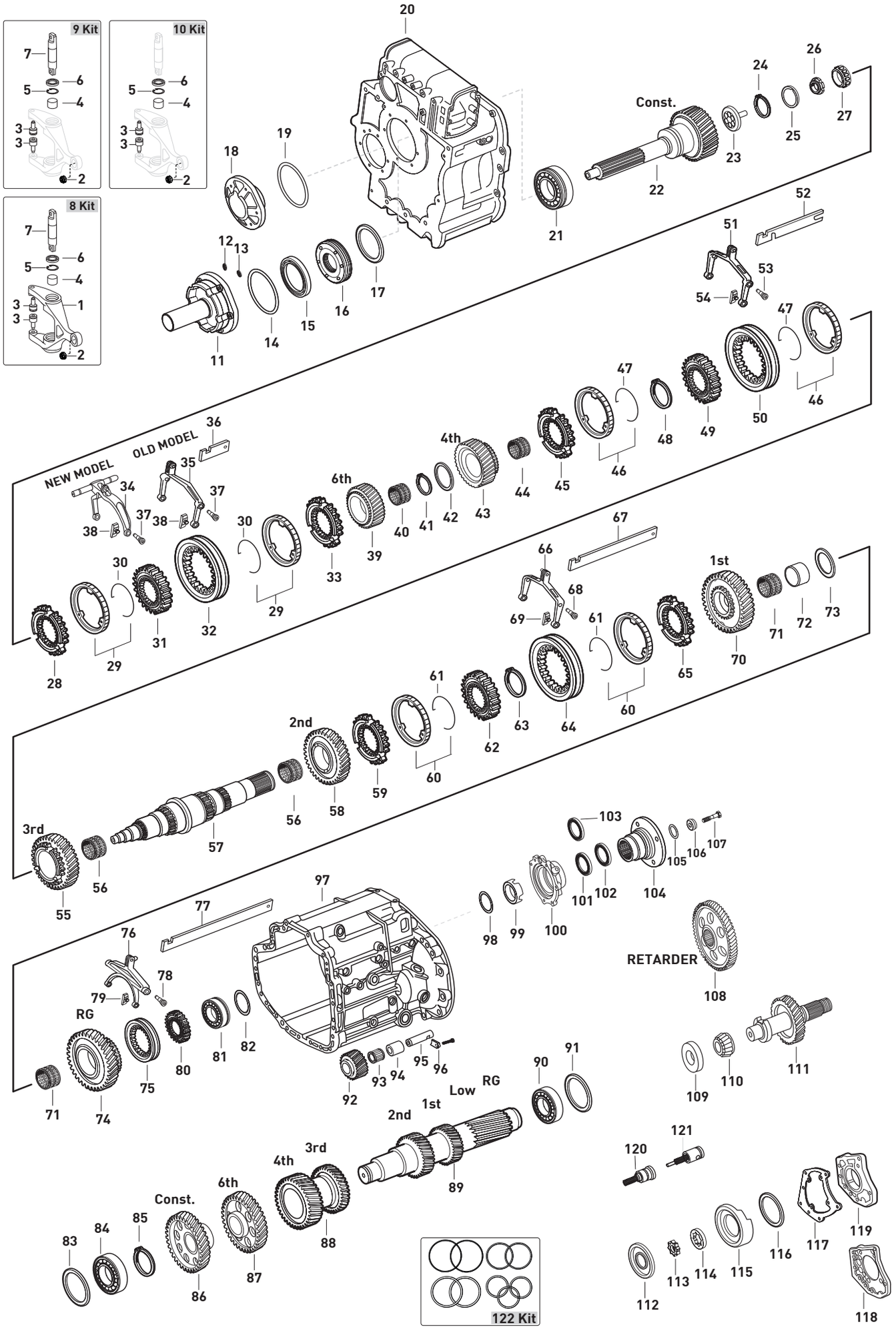




Original parts names, oem numbers, symbols and descriptions used in this catalogue are for reference purposes only.

| Fig. | Kacmaz No | Oem No | Oem Old No | Pcs. | Ürün Tanımı | Description | Sizes | Not | 714140 | 714143 | 714145 | 714160 | 714161 |
|---|---|---|---|---|---|---|---|---|---|---|---|---|---|
| 41 | K21.06914 | 389 262 3373 | | 1 | 4./6.VİTES ARA SEKMANI | RETAINING RING | 2,45mm | | ♦ | ♦ | ♦ | ♦ | ♦ |
| 41 | K21.06913 | 389 262 3473 | | 1 | 4./6.VİTES ARA SEKMANI | RETAINING RING | 2,50mm | | ♦ | ♦ | ♦ | ♦ | ♦ |
| 41 | K21.06912 | 389 262 3573 | | 1 | 4./6.VİTES ARA SEKMANI | RETAINING RING | 2,55mm | | ♦ | ♦ | ♦ | ♦ | ♦ |
| 41 | K21.06911 | 389 262 3673 | | 1 | 4./6.VİTES ARA SEKMANI | RETAINING RING | 2,60mm | | ♦ | ♦ | ♦ | ♦ | ♦ |
| 41 | K21.06910 | 389 262 3773 | | 1 | 4./6.VİTES ARA SEKMANI | RETAINING RING | 2,65mm | | ♦ | ♦ | ♦ | ♦ | ♦ |
| 41 | K21.06909 | 389 262 3873 | | 1 | 4./6.VİTES ARA SEKMANI | RETAINING RING | 2,70mm | | ♦ | ♦ | ♦ | ♦ | ♦ |
| 41 | K21.06908 | 389 262 3973 | | 1 | 4./6.VİTES ARA SEKMANI | RETAINING RING | 2,75mm | | ♦ | ♦ | ♦ | ♦ | ♦ |
| 42 | K21.04143 | 389 262 1862 | | 1 | 4./6.VİTES ARA PULU | THRUST WASHER | | | ♦ | ♦ | ♦ | ♦ | ♦ |
| 43 | K21.03247 | 389 262 0814 | (389 262 0114) | 1 | 4.VİTES DİŞLİSİ 35 DİŞ | GEAR 4th 35 T. | | | ♦ | ♦ | ♦ | ♦ | ♦ |
| | | | (389 262 0214) | | | | | | | | | | |
| | | | (389 262 0414) | | | | | | | | | | |
| | | | (389 262 0614) | | | | | | | | | | |
| | | | (389 262 0914) | | | | | | | | | | |
| | | | (389 262 1114) | | | | | | | | | | |
| | | | (976 262 0814) | | | | | | | | | | |
| 44 | K21.03803 | 009 981 1510 | (017 981 7810) | 1 | 4.VİTES MASURA BİLYA | NEEDLE CAGE | 78X86X35mm | | ♦ | ♦ | ♦ | ♦ | ♦ |
| | | | (008 981 9310) | | | | | | | | | | |
| | | | (012 981 9110) | | | | | | | | | | |
| | | | (018 981 7510) | | | | | | | | | | |
| 45 | K21.06110 | 945 262 6134 | | 1 | 4.VİTES SENKROMENÇ | ENGAGING RING | | (A) | ♦ | ♦ | ♦ | ♦ | ♦ |
| 45 | K21.06111 | 945 262 5034 | (389 262 5734) | 1 | 4.VİTES SENKROMENÇ | ENGAGING RING | | (B) | ♦ | | | ♦ | |
| 46 | K21.03136 | 945 260 2245 | (946 262 6337) | 2 | 3./4.VİTES FRENLEME (Mo) | SYNCHRONIZING CONE / Mo | | (A) | ♦ | ♦ | ♦ | ♦ | ♦ |
| 46 | K21.03015 | 389 262 0637 | (387 262 0837) | 2 | 3./4.VİTES FRENLEME (Mo) | SYNCHRONIZING CONE / Mo | | (B) | ♦ | | | ♦ | |
| | | | (389 262 1037) | | | | | | | | | | |
| 47 | K21.03044 | 387 262 1093 | (387 262 0693) | 2 | FRENLEME TELİ | SPRING | | | ♦ | ♦ | ♦ | ♦ | ♦ |
| | | | (960 262 1393) | | | | | | | | | | |
| 48 | K21.06927 | 389 262 0173 | | 1 | 3./4.VİTES YILDIZ DİŞLİ SEKMANI | RETAINING RING | 2,90mm | | ♦ | ♦ | ♦ | ♦ | ♦ |
| 48 | K21.06924 | 389 262 0373 | | 1 | 3./4.VİTES YILDIZ DİŞLİ SEKMANI | RETAINING RING | 3,00mm | | ♦ | ♦ | ♦ | ♦ | ♦ |
| 48 | K21.06921 | 389 262 0573 | | 1 | 3./4.VİTES YILDIZ DİŞLİ SEKMANI | RETAINING RING | 3,10mm | | ♦ | ♦ | ♦ | ♦ | ♦ |
| 48 | K21.06919 | 389 262 1273 | | 1 | 3./4.VİTES YILDIZ DİŞLİ SEKMANI | RETAINING RING | 3,20mm | | ♦ | ♦ | ♦ | ♦ | ♦ |
| 48 | K21.06917 | 389 262 1373 | | 1 | 3./4.VİTES YILDIZ DİŞLİ SEKMANI | RETAINING RING | 3,25mm | | ♦ | ♦ | ♦ | ♦ | ♦ |
| 48 | K21.06916 | 389 262 1473 | | 1 | 3./4.VİTES YILDIZ DİŞLİ SEKMANI | RETAINING RING | 3,30mm | | ♦ | ♦ | ♦ | ♦ | ♦ |
| 49 | K21.06112 | 389 262 4435 | | 1 | 3./4.VİTES YILDIZ DİŞLİ 72 DİŞ | SYNCHRONIZER HUB 72 T. | | | ♦ | ♦ | ♦ | ♦ | ♦ |
| 50 | K21.06105 | 945 262 5723 | | 1 | 3./4.VİTES HALKA | ENGAGING SLEEVE | | (A) | ♦ | ♦ | ♦ | ♦ | ♦ |
| 50 | K21.06106 | 389 262 2023 | | 1 | 3./4.VİTES HALKA | ENGAGING SLEEVE | | (B) | ♦ | | | ♦ | |
| 51 | K21.06403 | 389 260 3930 | (389 260 2430) | 1 | 3./4.VİTES HİLALİ | SHIFTING FORK 3rd/4th | | | ♦ | ♦ | ♦ | ♦ | ♦ |
| 52 | | 389 265 9704 | | 1 | 3./4.VİTES HİLAL ÇITASI | SHIFTING ROD | | | ♦ | ♦ | ♦ | ♦ | ♦ |
| 53 | K21.04307 | 960 265 0774 | (945 265 1274) | 2 | HİLAL CİVATASI | PIN | | | ♦ | ♦ | ♦ | ♦ | ♦ |
| | | | (945 265 2974) | | | | | | | | | | |
| | | | (945 265 2774) | | | | | | | | | | |
| 54 | K21.03431 | 960 265 0049 | (947 265 0349) | 2 | 3./4.VİTES HİLAL PABUCU | SLIDING PAD | | | ♦ | ♦ | ♦ | ♦ | ♦ |
| | | | (389 265 2749) | | | | | | | | | | |
| 55 | K21.06113 | 945 262 6417 | | 1 | 3.VİTES DİŞLİSİ 40 DİŞ | GEAR 3rd 40 T. | | (A) | ♦ | ♦ | ♦ | ♦ | ♦ |
| 55 | K21.06114 | 656 262 4413 | (389 262 3513) | 1 | 3.VİTES DİŞLİSİ 40 DİŞ | GEAR 3rd 40 T. | | (B) | ♦ | | | ♦ | |
| | | | (389 262 3613) | | | | | | | | | | |
| | | | (389 262 4313) | | | | | | | | | | |
| | | | (389 262 4413) | | | | | | | | | | |
| | | | (656 262 0013) | | | | | | | | | | |
| 56 | K21.03845 | 008 981 8610 | (007 981 5510) | 2 | 2./3.VİTES MASURA BİLYA | NEEDLE CAGE | 92X100X49,5mm | | ♦ | ♦ | ♦ | ♦ | ♦ |
| | | | (019 981 3410) | | | | | | | | | | |
| | | | (018 981 7910) | | | | | | | | | | |
| 57 | K21.06115 | 656 262 0805 | (389 262 4605) | 1 | KAMALI MİL | MAIN SHAFT | | | ♦ | ♦ | ♦ | ♦ | ♦ |
| | | | (389 262 4505) | | | | | | | | | | |
| | | | (389 262 3205) | | | | | | | | | | |
| | | | (389 262 4005) | | | | | | | | | | |

NOTES :
Parts encoded alphabetic and numaric are used together.
GEARBOX TYPE:
714140 - GO210 - 6 / 6,5 - 0,8
714143 - GO210 - 6E / 6,53 - 0,72
714145 - GO210 - 6 / 6,53 - 0,72
714160 - GO230 - 6 / 6,5 - 0,8
714161 - GO230 - 6E / 6,53 - 0,72

NOTLAR :
Alfabetik ve rakam ile kodlanan parçalar birlikte kullanılır.
ŞANZIMAN TİPLERİ :
714140 - GO210 - 6 / 6,5 - 0,8
714143 - GO210 - 6E / 6,53 - 0,72
714145 - GO210 - 6 / 6,53 - 0,72
714160 - GO230 - 6 / 6,5 - 0,8
714161 - GO230 - 6E / 6,53 - 0,72

Original parts names, oem numbers, symbols and descriptions used in this catalogue are for reference purposes only.

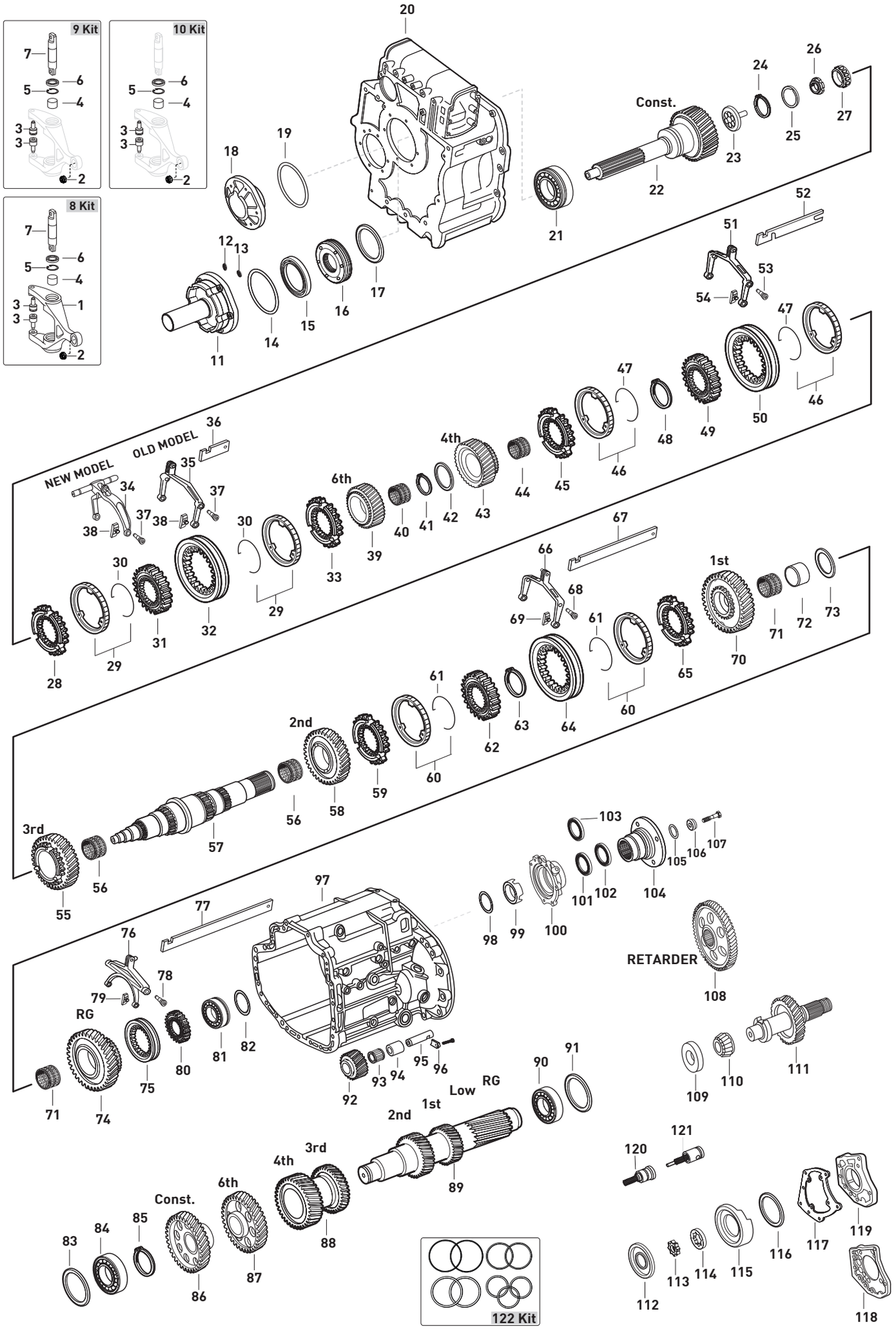




Original parts names, oem numbers, symbols and descriptions used in this catalogue are for reference purposes only.

| Fig. | Kacmaz No | Oem No | Oem Old No | Pcs. | Ürün Tanımı | Description | Sizes | Not | 714140 | 714143 | 714145 | 714160 | 714161 |
|---|---|---|---|---|---|---|---|---|---|---|---|---|---|
| 58 | K21.03254 | 976 262 1612 | (389 262 2712) | 1 | 2.VİTES DİŞLİSİ 45 DİŞ | GEAR 2nd 45 T. | | | ♦ | ♦ | ♦ | ♦ | ♦ |
| | | | (976 262 1312) | | | | | | | | | | |
| | | | (976 262 0612) | | | | | | | | | | |
| | | | (976 262 1212) | | | | | | | | | | |
| | | | (976 262 0312) | | | | | | | | | | |
| | | | (389 262 3112) | | | | | | | | | | |
| | | | (976 262 1412) | | | | | | | | | | |
| 59 | K21.06117 | 945 262 6034 | | 1 | 2.VİTES SENKROMENÇ | ENGAGING RING | | (A) | ♦ | ♦ | ♦ | ♦ | ♦ |
| 59 | K21.06118 | 945 262 4934 | (389 262 8334) | 1 | 2.VİTES SENKROMENÇ | ENGAGING RING | | (B) | ♦ | | | ♦ | |
| 60 | K21.03148 | 947 260 1945 | (947 260 4645) | 2 | 1./2.VİTES FRENLEME (Mo) | SYNCHRONIZING CONE / Mo | | (A) | ♦ | ♦ | ♦ | ♦ | ♦ |
| | | | (946 262 6137) | | | | | | | | | | |
| 60 | K21.03016 | 389 262 0737 | (387 262 0937) | 2 | 1./2.VİTES FRENLEME (Mo) | SYNCHRONIZING CONE / Mo | | (B) | ♦ | | | ♦ | |
| | | | (389 262 1137) | | | | | | | | | | |
| 61 | K21.03055 | 387 262 0893 | (387 262 0793) | 2 | FRENLEME TELİ | SPRING | | | ♦ | ♦ | ♦ | ♦ | ♦ |
| 62 | K21.06119 | 389 262 5635 | (389 262 3335) | 1 | 1./2.VİTES YILDIZ DİŞLİ | SYNCHRONIZER HUB | | | ♦ | ♦ | ♦ | ♦ | ♦ |
| 63 | K21.06928 | 387 262 4173 | | 1 | 1./2.VİTES YILDIZ DİŞLİ SEKMANI | RETAINING RING | 2,90mm | | ♦ | ♦ | ♦ | ♦ | ♦ |
| 63 | K21.06926 | 387 262 4273 | | 1 | 1./2.VİTES YILDIZ DİŞLİ SEKMANI | RETAINING RING | 2,95mm | | ♦ | ♦ | ♦ | ♦ | ♦ |
| 63 | K21.06906 | 387 262 4373 | | 1 | 1./2.VİTES YILDIZ DİŞLİ SEKMANI | RETAINING RING | 3,00mm | | ♦ | ♦ | ♦ | ♦ | ♦ |
| 63 | K21.06923 | 387 262 4473 | | 1 | 1./2.VİTES YILDIZ DİŞLİ SEKMANI | RETAINING RING | 3,05mm | | ♦ | ♦ | ♦ | ♦ | ♦ |
| 63 | K21.06922 | 387 262 4573 | | 1 | 1./2.VİTES YILDIZ DİŞLİ SEKMANI | RETAINING RING | 3,10mm | | ♦ | ♦ | ♦ | ♦ | ♦ |
| 63 | K21.06920 | 387 262 4673 | | 1 | 1./2.VİTES YILDIZ DİŞLİ SEKMANI | RETAINING RING | 3,15mm | | ♦ | ♦ | ♦ | ♦ | ♦ |
| 63 | K21.06918 | 387 262 9773 | | 1 | 1./2.VİTES YILDIZ DİŞLİ SEKMANI | RETAINING RING | 3,20mm | | ♦ | ♦ | ♦ | ♦ | ♦ |
| 64 | K21.06120 | 945 262 5623 | | 1 | 1./2.VİTES HALKA | ENGAGING SLEEVE | | (A) | ♦ | ♦ | ♦ | ♦ | ♦ |
| 64 | K21.06121 | 389 262 2123 | | 1 | 1./2.VİTES HALKA | ENGAGING SLEEVE | | (B) | ♦ | | | ♦ | |
| 65 | K21.06122 | 945 262 5934 | | 1 | 1.VİTES SENKROMENÇ | ENGAGING RING | | (A) | ♦ | ♦ | ♦ | ♦ | ♦ |
| 65 | K21.06123 | 945 262 4834 | (389 262 8234) | 1 | 1.VİTES SENKROMENÇ | ENGAGING RING | | (B) | ♦ | | | ♦ | |
| 66 | | 387 260 4930 | (389 260 3230) | 1 | 1./2.VİTES HİLALİ | SHIFTING FORK | | | ♦ | ♦ | ♦ | ♦ | ♦ |
| 67 | | 389 265 9804 | | 1 | 1./2.VİTES HİLAL ÇITASI | SHIFTING ROD | | | ♦ | ♦ | ♦ | ♦ | ♦ |
| 68 | K21.04307 | 960 265 0774 | (945 265 1274) | 2 | HİLAL CİVATASI | PIN | | | ♦ | ♦ | ♦ | ♦ | ♦ |
| | | | (945 265 2974) | | | | | | | | | | |
| | | | (945 265 2774) | | | | | | | | | | |
| 69 | K21.03431 | 960 265 0049 | (947 265 0349) | 2 | 1./2.VİTES HİLAL PABUCU | SLIDING PAD | | | ♦ | ♦ | ♦ | ♦ | ♦ |
| | | | (389 265 2749) | | | | | | | | | | |
| 70 | K21.06124 | 656 262 0211 | (389 262 3311) | 1 | 1.VİTES DİŞLİSİ 50 DİŞ | GEAR 1st 50 T. | | | ♦ | ♦ | ♦ | ♦ | ♦ |
| | | | (389 262 2511) | | | | | | | | | | |
| | | | (389 262 3411) | | | | | | | | | | |
| | | | (389 262 3011) | | | | | | | | | | |
| 71 | K21.03847 | 021 981 9410 | (008 981 8510) | 2 | 1.VE GERİ VİTES MASURA BİLYA | NEEDLE CAGE | 85X93X45mm | | ♦ | ♦ | ♦ | ♦ | ♦ |
| | | | (008 981 9810) | | | | | | | | | | |
| | | | (019 981 0610) | | | | | | | | | | |
| | | | (019 981 6210) | | | | | | | | | | |
| 72 | K21.06125 | 389 262 2250 | (389 262 2450) | 1 | 1.VİTES MASURA BİLYA ÇANAĞI | BEARING RACE | | | ♦ | ♦ | ♦ | ♦ | ♦ |
| 73 | K21.04284 | 389 262 2855 | | 1 | 1.VİTES MESAFE AYAR PULU | THRUST WASHER | 5,50mm | | ♦ | ♦ | ♦ | ♦ | ♦ |
| 74 | K21.06126 | 389 262 2233 | (389 262 2733) | 1 | GERİ VİTES DİŞLİSİ 47 DİŞ | REVERSE GEAR 47 T. | | | ♦ | ♦ | ♦ | ♦ | ♦ |
| 75 | K21.03061 | 389 262 1823 | (389 262 0923) | 1 | GERİ VİTES HALKASI | ENGAGING SLEEVE | | EPS | ♦ | ♦ | ♦ | ♦ | ♦ |
| 75 | K21.03060 | 389 262 1723 | (389 262 0023) | 1 | GERİ VİTES HALKASI | ENGAGING SLEEVE | | MPS | ♦ | ♦ | ♦ | ♦ | ♦ |
| 76 | | 656 260 0230 | (389 260 2630) | 1 | GERİ VİTES HİLALİ | SHIFTING FORK | | | ♦ | ♦ | ♦ | ♦ | ♦ |
| | | | (389 260 0330) | | | | | | | | | | |
| 77 | | 389 260 2831 | | 1 | GERİ VİTES HİLAL ÇITASI | SHIFTING ROD | | | ♦ | ♦ | ♦ | ♦ | ♦ |
| 78 | K21.04307 | 960 265 0774 | (945 265 1274) | 2 | GERİ VİTES HİLAL CİVATASI | PIN | | | ♦ | ♦ | ♦ | ♦ | ♦ |
| | | | (945 265 2974) | | | | | | | | | | |
| | | | (945 265 2774) | | | | | | | | | | |
| 79 | K21.03410 | 947 265 0249 | (945 265 0149) | 2 | GERİ VİTES HİLAL PABUCU | SLIDING PAD | | | ♦ | ♦ | ♦ | ♦ | ♦ |
| 80 | K21.06127 | 389 262 4235 | | 1 | GERİ VİTES YILDIZ DİŞLİ | SYNCHRONIZER HUB | | EPS | ♦ | ♦ | ♦ | ♦ | ♦ |
| 80 | K21.06128 | 389 262 7035 | (389 262 4135) | 1 | GERİ VİTES YILDIZ DİŞLİ | SYNCHRONIZER HUB | | MPS | ♦ | ♦ | ♦ | ♦ | ♦ |

NOTES :
Parts encoded alphabetic and numaric are used together.
GEARBOX TYPE:
714140 - GO210 - 6 / 6,5 - 0,8
714143 - GO210 - 6E / 6,53 - 0,72
714145 - GO210 - 6 / 6,53 - 0,72
714160 - GO230 - 6 / 6,5 - 0,8
714161 - GO230 - 6E / 6,53 - 0,72

NOTLAR :
Alfabetik ve rakam ile kodlanan parçalar birlikte kullanılır.
ŞANZIMAN TİPLERİ :
714140 - GO210 - 6 / 6,5 - 0,8
714143 - GO210 - 6E / 6,53 - 0,72
714145 - GO210 - 6 / 6,53 - 0,72
714160 - GO230 - 6 / 6,5 - 0,8
714161 - GO230 - 6E / 6,53 - 0,72

Original parts names, oem numbers, symbols and descriptions used in this catalogue are for reference purposes only.

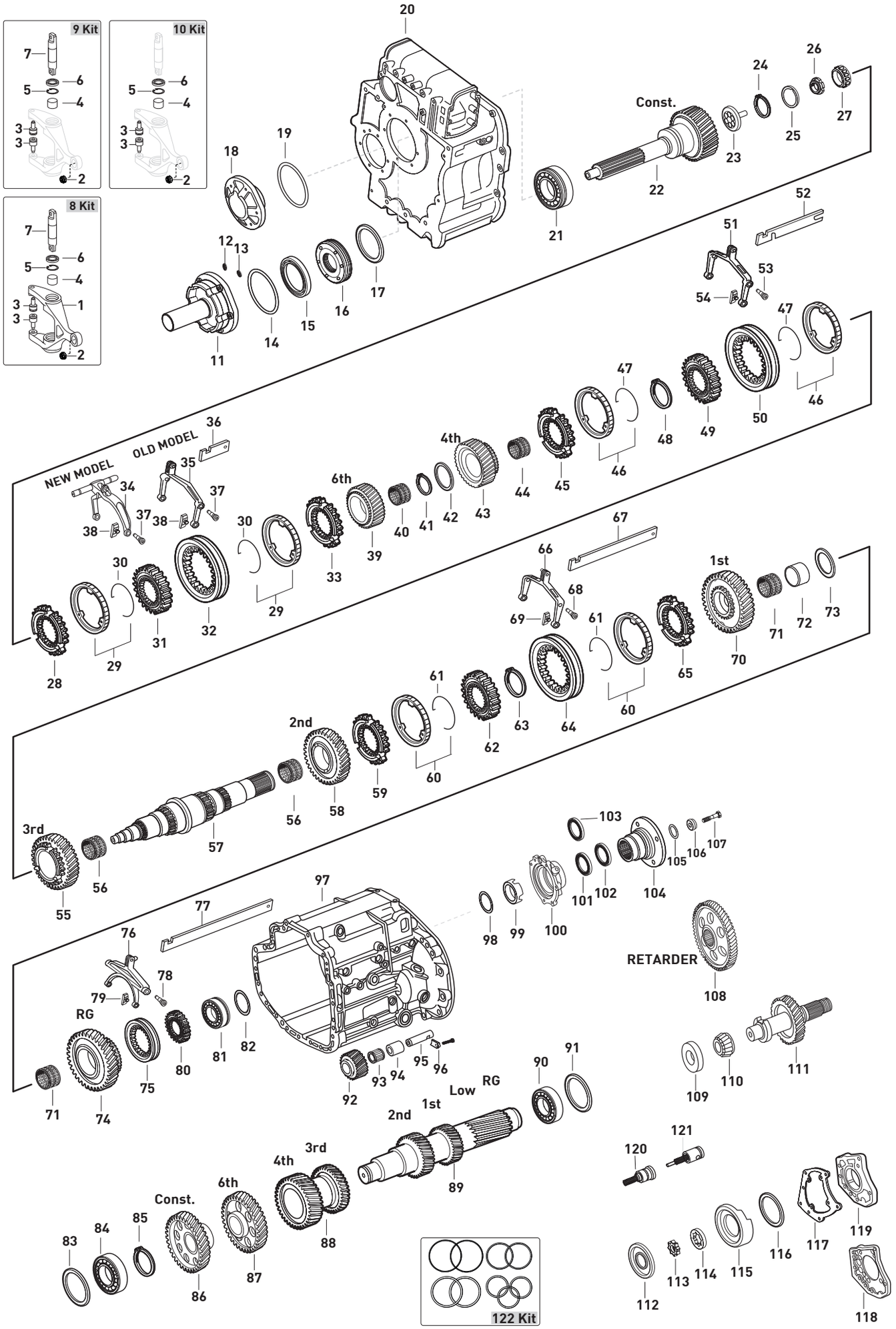




Original parts names, oem numbers, symbols and descriptions used in this catalogue are for reference purposes only.

| Fig. | Kacmaz No | Oem No | Oem Old No | Pcs. | Ürün Tanımı | Description | Sizes | Not | 714140 | 714143 | 714145 | 714160 | 714161 |
|---|---|---|---|---|---|---|---|---|---|---|---|---|---|
| 81 | K21.03658 | 012 981 3705 | (015 981 4005) | 1 | KAMALI MİL ARKA BİLYA | ROLLER BEARING | 65X140X13,5mm | | ♦ | ♦ | ♦ | ♦ | ♦ |
| | | | (018 981 6705) | | | | | | | | | | |
| 82 | K21.04328 | | | 1 | KAMALI MİL ARKA BİLYA RAYNELİ | THRUST WASHER | 0,25mm | | ♦ | ♦ | ♦ | ♦ | ♦ |
| 82 | K21.04327 | | | 1 | KAMALI MİL ARKA BİLYA RAYNELİ | THRUST WASHER | 0,30mm | | ♦ | ♦ | ♦ | ♦ | ♦ |
| 83 | K21.04192 | 406 337 0252 | | 1 | GRUP MİLİ ÖN BİLYA RAYNELİ | THRUST WASHER | 0,10mm | | ♦ | ♦ | ♦ | ♦ | ♦ |
| 83 | K21.04150 | 406 337 0352 | | 1 | GRUP MİLİ ÖN BİLYA RAYNELİ | THRUST WASHER | 0,20mm | | ♦ | ♦ | ♦ | ♦ | ♦ |
| 83 | K21.94150 | | | 1 | GRUP MİLİ ÖN BİLYA RAYNELİ | THRUST WASHER | 0,25mm | | ♦ | ♦ | ♦ | ♦ | ♦ |
| 83 | K21.04338 | 406 337 0452 | | 1 | GRUP MİLİ ÖN BİLYA RAYNELİ | THRUST WASHER | 0,30mm | | ♦ | ♦ | ♦ | ♦ | ♦ |
| 83 | K21.04196 | 389 263 5352 | (389 263 3252) | 1 | GRUP MİLİ ÖN BİLYA RAYNELİ | THRUST WASHER | 0,40mm | | ♦ | ♦ | ♦ | ♦ | ♦ |
| 83 | K21.04194 | 389 263 3352 | | 1 | GRUP MİLİ ÖN BİLYA RAYNELİ | THRUST WASHER | 0,45mm | | ♦ | ♦ | ♦ | ♦ | ♦ |
| 83 | K21.06719 | 389 263 5652 | | 1 | GRUP MİLİ ÖN BİLYA RAYNELİ | THRUST WASHER | 0,49mm | | ♦ | ♦ | ♦ | ♦ | ♦ |
| 83 | K21.04197 | 389 263 5852 | (389 263 3552) | 1 | GRUP MİLİ ÖN BİLYA RAYNELİ | THRUST WASHER | 0,55mm | | ♦ | ♦ | ♦ | ♦ | ♦ |
| 83 | K21.04340 | 389 263 6052 | | 1 | GRUP MİLİ ÖN BİLYA RAYNELİ | THRUST WASHER | 0,61mm | | ♦ | ♦ | ♦ | ♦ | ♦ |
| 83 | K21.04198 | 389 263 6352 | (389 263 3852) | 1 | GRUP MİLİ ÖN BİLYA RAYNELİ | THRUST WASHER | 0,70mm | | ♦ | ♦ | ♦ | ♦ | ♦ |
| 83 | K21.04154 | 389 263 3952 | | 1 | GRUP MİLİ ÖN BİLYA RAYNELİ | THRUST WASHER | 0,75mm | | ♦ | ♦ | ♦ | ♦ | ♦ |
| 83 | K21.04199 | 389 263 6852 | | 1 | GRUP MİLİ ÖN BİLYA RAYNELİ | THRUST WASHER | 0,85mm | | ♦ | ♦ | ♦ | ♦ | ♦ |
| 83 | K21.04200 | 389 263 7352 | | 1 | GRUP MİLİ ÖN BİLYA RAYNELİ | THRUST WASHER | 1,00mm | | ♦ | ♦ | ♦ | ♦ | ♦ |
| 83 | K21.04201 | 389 263 7852 | | 1 | GRUP MİLİ ÖN BİLYA RAYNELİ | THRUST WASHER | 1,15mm | | ♦ | ♦ | ♦ | ♦ | ♦ |
| 83 | K21.04202 | 389 263 8352 | | 1 | GRUP MİLİ ÖN BİLYA RAYNELİ | THRUST WASHER | 1,30mm | | ♦ | ♦ | ♦ | ♦ | ♦ |
| 84 | K21.03606 | 015 981 9005 | (014 981 1405) | 1 | GRUP MİLİ ÖN BİLYA | ROLLER BEARING | 50,8X100X35mm | | ♦ | ♦ | ♦ | ♦ | ♦ |
| | | | (012 981 7405) | | | | | | | | | | |
| | | | (012 981 5105) | | | | | | | | | | |
| 85 | K21.06426 | 900055 060300 | (000 264 5351) | 1 | GRUP MİLİ ÖN BİLYA SEKMANI | RETAINING RING | 3,00mm | | ♦ | ♦ | ♦ | ♦ | ♦ |
| 86 | K21.06162 | 389 263 1910 | (389 263 2710) | 1 | PRİZDİREK DİŞLİ KARŞILIĞI 47 DİŞ | CONSTANT GEAR 47 T. | | | ♦ | ♦ | ♦ | ♦ | ♦ |
| 87 | K21.06163 | 389 263 0116 | | 1 | 6.VİTES DİŞLİ KARŞILIĞI 51 DİŞ | GEAR 6th 51 T. | | (5) | ♦ | | | ♦ | |
| 87 | K21.06262 | 656 263 0016 | | 1 | 6.VİTES DİŞLİ KARŞILIĞI 52 DİŞ | GEAR 6th 52 T. | | (6)(7) | | ♦ | ♦ | | ♦ |
| 88 | K21.06141 | 656 263 0013 | (389 263 2713) | 1 | 3./4.VİT.DİŞLİ KARŞILIĞI 28/38 DİŞ | DOUBLE GEAR 3rd/4th 28/38 T. | | | ♦ | ♦ | ♦ | ♦ | ♦ |
| | | | (389 263 2813) | | | | | | | | | | |
| | | | (389 263 3013) | | | | | | | | | | |
| 89 | K21.06142 | 389 263 3402 | (389 263 2102) | 1 | GRUP MİLİ 12/19 DİŞ | COUNTER SHAFT 12/19 T. | | | ♦ | ♦ | ♦ | ♦ | ♦ |
| | | | (389 263 2302) | | | | | | | | | | |
| | | | (389 263 2402) | | | | | | | | | | |
| | | | (389 263 2602) | | | | | | | | | | |
| | | | (389 263 2702) | | | | | | | | | | |
| 90 | K21.03660 | 012 981 3605 | (015 981 4105) | 1 | GRUP MİLİ ARKA BİLYA | ROLLER BEARING | 45X110X12mm | | ♦ | ♦ | ♦ | ♦ | ♦ |
| 91 | K21.04325 | | | 1 | GRUP MİLİ ARKA BİLYA RAYNELİ | THRUST WASHER | 0,30mm | | ♦ | ♦ | ♦ | ♦ | ♦ |
| 91 | K21.04326 | | | 1 | GRUP MİLİ ARKA BİLYA RAYNELİ | THRUST WASHER | 0,25mm | | ♦ | ♦ | ♦ | ♦ | ♦ |
| 92 | K21.06144 | 389 263 1931 | | 1 | KÜÇÜK GERİ VİTES DİŞLİSİ 21 DİŞ | REVERSE IDLER GEAR 21 T. | | | ♦ | ♦ | ♦ | ♦ | ♦ |
| 93 | | 015 981 4110 | (019 981 0510) | 1 | KÜÇÜK GERİ VİTES MAS.BİLYA | NEEDLE BEARING | 48X60X31mm | | ♦ | ♦ | ♦ | ♦ | ♦ |
| 94 | K21.06146 | 389 263 0650 | | 1 | K.GERİ VİTES MASURA BİLYA ÇANAĞI | BUSHING | 63,10mm | | ♦ | ♦ | ♦ | ♦ | ♦ |
| 95 | K21.06148 | 976 263 0330 | (389 263 0730) | 1 | KÜÇÜK GERİ VİTES PİMİ | PIN | | | ♦ | ♦ | ♦ | ♦ | ♦ |
| 96 | | 976 263 0041 | | 1 | KÜÇÜK GERİ VİTES PİM TUTUCU | PIN | | | ♦ | ♦ | ♦ | ♦ | ♦ |
| 97 | | 389 261 1529 | | 1 | ŞANZIMAN ORTA GÖVDE | HOUSING | | | ♦ | ♦ | ♦ | ♦ | ♦ |
| 97 | | 389 261 3429 | | 1 | ŞANZIMAN ORTA GÖVDE | HOUSING | | | ♦ | | | ♦ | |
| 97 | | 389 261 3529 | | 1 | ŞANZIMAN ORTA GÖVDE | HOUSING | | | ♦ | ♦ | ♦ | ♦ | ♦ |
| 98 | | 389 262 8354 | | 1 | ŞANZIMAN KM DEVİR PULU | THRUST WASHER | | | ♦ | | | ♦ | |
| 99 | K21.04144 | 387 262 0928 | | 1 | ŞANZIMAN KM DEVİR SACI | PULSE STAR | | | ♦ | ♦ | ♦ | ♦ | ♦ |
| 99 | | 389 260 0250 | | 1 | ŞANZIMAN KM DEVİR SACI | PULSE STAR | | | ♦ | | | | |
| 99 | | 387 260 1150 | | 1 | ŞANZIMAN KM DEVİR SACI | PULSE STAR | | | ♦ | | | | |
| 100 | | 389 261 1520 | (389 261 1420) | 1 | ŞANZIMAN ARKA KEÇE KAPAĞI | COVER | | | ♦ | ♦ | ♦ | ♦ | ♦ |
| 101 | K21.03537 | 017 997 2547 | (007 997 3847) | 1 | ŞANZIMAN ARKA KEÇE | OIL SEAL | 80X100X10mm | | ♦ | ♦ | ♦ | ♦ | ♦ |
| | | | (007 997 9847) | | | | | | | | | | |
| | | | (008 997 0347) | | | | | | | | | | |
| 102 | K26.00104 | 017 997 7947 | (007 997 8446) | 1 | ŞANZIMAN ARKA KEÇE | OIL SEAL | 80X100X10mm | | ♦ | ♦ | ♦ | ♦ | ♦ |
| | | | (008 997 0047) | | | | | | | | | | |

NOTES :
Parts encoded alphabetic and numaric are used together.
GEARBOX TYPE:
714140 - GO210 - 6 / 6,5 - 0,8
714143 - GO210 - 6E / 6,53 - 0,72
714145 - GO210 - 6 / 6,53 - 0,72
714160 - GO230 - 6 / 6,5 - 0,8
714161 - GO230 - 6E / 6,53 - 0,72

NOTLAR :
Alfabetik ve rakam ile kodlanan parçalar birlikte kullanılır.
ŞANZIMAN TİPLERİ :
714140 - GO210 - 6 / 6,5 - 0,8
714143 - GO210 - 6E / 6,53 - 0,72
714145 - GO210 - 6 / 6,53 - 0,72
714160 - GO230 - 6 / 6,5 - 0,8
714161 - GO230 - 6E / 6,53 - 0,72

Original parts names, oem numbers, symbols and descriptions used in this catalogue are for reference purposes only.

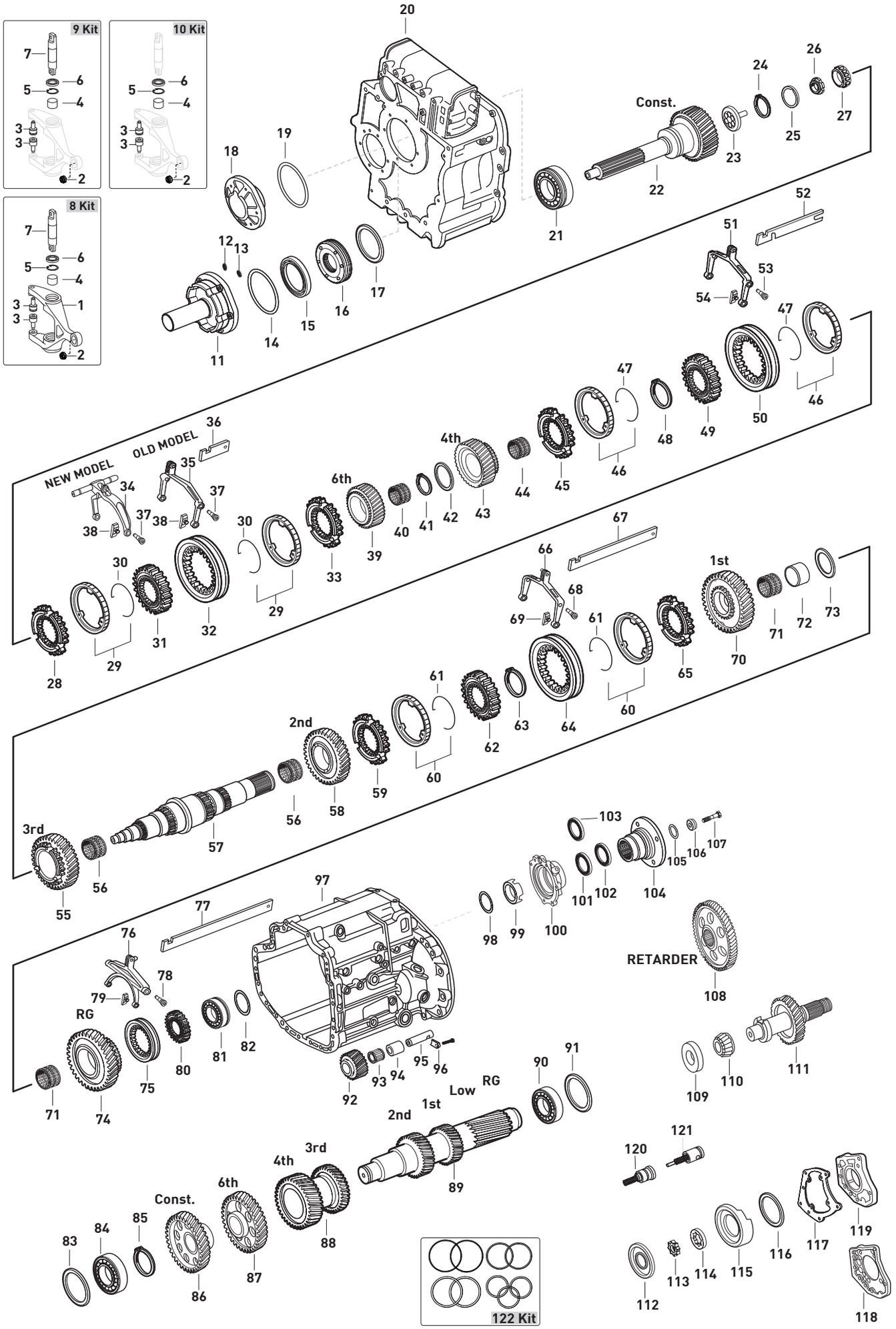




Original parts names, oem numbers, symbols and descriptions used in this catalogue are for reference purposes only.

| Fig. | Kacmaz No | Oem No | Oem Old No | Pcs. | Ürün Tanımı | Description | Sizes | Not | 714140 | 714143 | 714145 | 714160 | 714161 |
|---|---|---|---|---|---|---|---|---|---|---|---|---|---|
| 103 | K21.03519 | 023 997 8847 | (020 997 6447) | 1 | ŞANZIMAN ARKA KEÇE | OIL SEAL | 80X100X15,5mm | | ♦ | ♦ | ♦ | ♦ | ♦ |
| | | | (023 997 8547) | | | | | | | | | | |
| 104 | | 387 264 3445 | | 1 | ŞANZIMAN FLANŞI | COMPANION FLANGE | 4-H, Ø180mm | | ♦ | ♦ | ♦ | ♦ | ♦ |
| 104 | | 629 262 0145 | | 1 | ŞANZIMAN FLANŞI | COMPANION FLANGE | 4-H, Ø180mm | | ♦ | ♦ | ♦ | ♦ | ♦ |
| 104 | K21.06589 | 629 262 0045 | | 1 | ŞANZIMAN FLANŞI | COMPANION FLANGE | 4-H, Ø150mm | | ♦ | ♦ | ♦ | ♦ | ♦ |
| 104 | | 387 264 2445 | | 1 | ŞANZIMAN FLANŞI | COMPANION FLANGE | 4-H, Ø162mm | | ♦ | | | ♦ | |
| 104 | | 947 262 0345 | | 1 | ŞANZIMAN FLANŞI | COMPANION FLANGE | 4-H, Ø150mm | | ♦ | ♦ | | ♦ | ♦ |
| 104 | K21.06063 | 976 262 0145 | (976 262 0045) | 1 | ŞANZIMAN FLANŞI | COMPANION FLANGE | 4-H, Ø150mm | | ♦ | ♦ | ♦ | ♦ | ♦ |
| 105 | K21.06990 | 027 997 3048 | (023 997 5548) | 1 | ŞANZIMAN FLANŞ ORİNGİ | O-RING | 56,52X5,33mm | | ♦ | ♦ | ♦ | ♦ | ♦ |
| | | | (023 997 6048) | | | | | | | | | | |
| 106 | | 976 262 0362 | | 1 | ŞANZ.FLANŞI ALIN PULU | THRUST WASHER | | | ♦ | ♦ | ♦ | ♦ | ♦ |
| 107 | | 000000 000963 | | 1 | ŞANZ.FLANŞI ALIN VİDASI | SCREW | M20X1,5X80mm | | ♦ | ♦ | ♦ | ♦ | ♦ |
| 108 | K21.06137 | 960 264 0420 | (629 264 0020) | 1 | RETARDER DİŞLİSİ 61 DİŞ | RETARDER GEAR 61 T | | | ♦ | ♦ | ♦ | ♦ | ♦ |
| 109 | | 000 438 0112 | | 1 | RETARDER MİL PULU | THRUST WASHER | 14X4mm | | ♦ | ♦ | ♦ | ♦ | ♦ |
| 110 | | 002 981 6581 | | 1 | RETARDER MİL BİLYASI | ROLLER BEARING | | | ♦ | ♦ | ♦ | ♦ | ♦ |
| 111 | K21.06135 | 629 430 0246 | (629 430 0146) | 1 | RETARDER MİLİ | INTERMEDIATE SHAFT | | | ♦ | ♦ | ♦ | ♦ | ♦ |
| 111 | | 629 430 0046 | | 1 | RETARDER MİLİ | INTERMEDIATE SHAFT | | | ♦ | | | | |
| 112 | K21.03458 | 389 269 2001 | (389 269 1901) | 1 | YAĞ POMPA KAPAĞI | OIL PUMP COVER | | | ♦ | ♦ | ♦ | ♦ | ♦ |
| 113 | K21.03459 | 389 269 1606 | (389 269 1706) | 1 | YAĞ POMPA İÇ ROTOR | OIL PUMP GEAR | | | ♦ | ♦ | ♦ | ♦ | ♦ |
| 114 | K21.03414 | 389 269 0706 | (389 269 1206) | 1 | YAĞ POMPA DIŞ ROTOR | ROTOR | | | ♦ | ♦ | ♦ | ♦ | ♦ |
| 115 | K21.06261 | 656 269 0001 | (629 269 0001) | 1 | YAĞ POMPA GÖVDESİ | OIL PUMP HOUSING | | | ♦ | ♦ | ♦ | ♦ | ♦ |
| 116 | K21.04289 | 389 263 1352 | | 1 | YAĞ POMPA AYAR RAYNELİ | THRUST WASHER | 0,10mm | | ♦ | ♦ | ♦ | ♦ | ♦ |
| 116 | K21.04290 | 389 263 1452 | | 1 | YAĞ POMPA AYAR RAYNELİ | THRUST WASHER | 0,15mm | | ♦ | ♦ | ♦ | ♦ | ♦ |
| 116 | K21.04291 | 389 263 1552 | | 1 | YAĞ POMPA AYAR RAYNELİ | THRUST WASHER | 0,25mm | | ♦ | ♦ | ♦ | ♦ | ♦ |
| 116 | K21.04292 | 389 263 1652 | | 1 | YAĞ POMPA AYAR RAYNELİ | THRUST WASHER | 0,30mm | | ♦ | ♦ | ♦ | ♦ | ♦ |
| 116 | K21.04293 | 389 263 1752 | | 1 | YAĞ POMPA AYAR RAYNELİ | THRUST WASHER | 0,50mm | | ♦ | ♦ | ♦ | ♦ | ♦ |
| 117 | | 389 261 1580 | | 1 | YAĞ POMPA KAPAK CONTASI | GASKET | | | ♦ | ♦ | ♦ | ♦ | ♦ |
| 118 | K21.03667 | 945 261 0680 | (945 261 0580) | 1 | PTO KAPAK CONTASI | GASKET | | | ♦ | ♦ | ♦ | ♦ | ♦ |
| | | | (945 261 0080) | | | | | | | | | | |
| 119 | K21.06143 | 656 261 0133 | (389 261 1233) | 1 | PTO KAPAĞI | COVER | | | ♦ | ♦ | ♦ | ♦ | ♦ |
| | | | (389 261 1333) | | | | | | | | | | |
| | | | (389 261 2533) | | | | | | | | | | |
| 120 | K21.06953 | 960 260 1057 | | Kit | YAĞ BASINÇ VALFİ KOMPLE | VALVE KIT | | | ♦ | ♦ | ♦ | ♦ | ♦ |
| 121 | K21.06973 | 960 260 1257 | | Kit | YAĞ BASINÇ VALFİ KOMPLE | VALVE KIT | | | ♦ | ♦ | ♦ | ♦ | ♦ |
| 122 | K21.04329 | | | Kit | RAYNEL TAKIMI | WASHER KIT | | | ♦ | ♦ | ♦ | ♦ | ♦ |

NOTES :
Parts encoded alphabetic and numaric are used together.
GEARBOX TYPE:
714140 - GO210 - 6 / 6,5 - 0,8
714143 - GO210 - 6E / 6,53 - 0,72
714145 - GO210 - 6 / 6,53 - 0,72
714160 - GO230 - 6 / 6,5 - 0,8
714161 - GO230 - 6E / 6,53 - 0,72

NOTLAR :
Alfabetik ve rakam ile kodlanan parçalar birlikte kullanılır.
ŞANZIMAN TİPLERİ :
714140 - GO210 - 6 / 6,5 - 0,8
714143 - GO210 - 6E / 6,53 - 0,72
714145 - GO210 - 6 / 6,53 - 0,72
714160 - GO230 - 6 / 6,5 - 0,8
714161 - GO230 - 6E / 6,53 - 0,72

Original parts names, oem numbers, symbols and descriptions used in this catalogue are for reference purposes only.

SYNCHRONIZER KIT Const./5th
NEW MODEL (1)

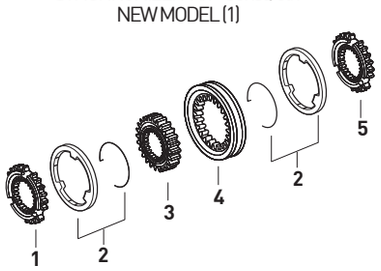


| Fig. | Kacmaz No. | Oem No | Oem Old No | Pcs. | Ürün Tanımı | Description |
|---|---|---|---|---|---|---|
| | K21.06232 | | | Kit | PRİZ./6.VİTES SENK.KİT | SYNCH.KIT Const./5th |
| 1 | K21.03147 | 945 262 7734 | (945 262 3634) | 1 | PRİZDİREK SENKROMENÇ | ENGAGING RING |
| 2 | K21.03136 | 945 260 2245 | (946 262 6337) | 2 | PRİZ./5.VİT.FRENLEME (Mo) | SYNCHRONIZING CONE / Mo |
| 3 | K21.06104 | 389 262 5335 | | 1 | PRİZ./6.VİT.YILDIZ DİŞLİ | SYNCHRONIZER HUB |
| 4 | K21.03137 | 945 262 6823 | (945 262 6423) | 1 | PRİZ./5.VİTES HALKA | ENGAGING SLEEVE |
| 5 | K21.06107 | 945 262 7134 | | 1 | 6.VİTES SENKROMENÇ | ENGAGING RING |

SYNCHRONIZER KIT Const./5th
NEW MODEL (2)

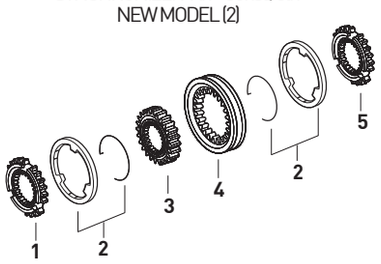


| Fig. | Kacmaz No. | Oem No | Oem Old No | Pcs. | Ürün Tanımı | Description |
|---|---|---|---|---|---|---|
| | K21.06292 | | | Kit | PRİZ./6.VİTES SENK.KİT | SYNCH.KIT Const./5th |
| 1 | K21.03147 | 945 262 7734 | (945 262 3634) | 1 | PRİZDİREK SENKROMENÇ | ENGAGING RING |
| 2 | K21.03136 | 945 260 2245 | (946 262 6337) | 2 | PRİZ./5.VİT.FRENLEME (Mo) | SYNCHRONIZING CONE / Mo |
| 3 | K21.06304 | 656 262 0335 | (656 262 0435) | 1 | PRİZ./6.VİT.YILDIZ DİŞLİ | SYNCHRONIZER HUB |
| 4 | K21.03137 | 945 262 6823 | (945 262 6423) | 1 | PRİZ.VE 5.VİTES HALKA | ENGAGING SLEEVE |
| 5 | K21.06314 | 656 262 0434 | | 1 | 6.VİTES SENKROMENÇ | ENGAGING RING |

SYNCHRONIZER KIT Const./5th
OLD MODEL

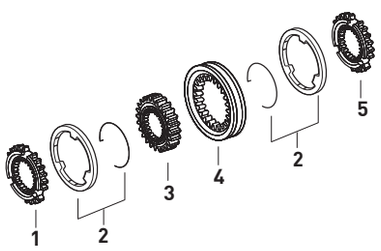


| Fig. | Kacmaz No. | Oem No | Oem Old No | Pcs. | Ürün Tanımı | Description |
|---|---|---|---|---|---|---|
| | K21.06233 | | | Kit | PRİZ./6.VİTES SENK.KİT | SYNCH.KIT Const./5th |
| 1 | K21.03024 | 389 262 5434 | (945 262 0334) | 1 | PRİZDİREK SENKROMENÇ | ENGAGING RING |
| | | | (945 262 0134) | | | |
| 2 | K21.03015 | 389 262 0637 | (387 262 0837) | 2 | PRİZ.VE 6.VİT.FRENLEME (Mo) | SYNCHRONIZING CONE / Mo |
| 3 | K21.06104 | 389 262 5335 | | 1 | PRİZ/6.VİTES YILDIZ DİŞLİ | SYNCHRONIZER HUB |
| 4 | K21.03002 | 945 262 2823 | (945 262 0323) | 1 | PRİZ.VE 6.VİTES HALKA | ENGAGING SLEEVE |
| 5 | K21.06108 | 389 262 9834 | | 1 | 6.VİTES SENKROMENÇ | ENGAGING RING |

SYNCHRONIZER KIT Const./5th
OLD MODEL

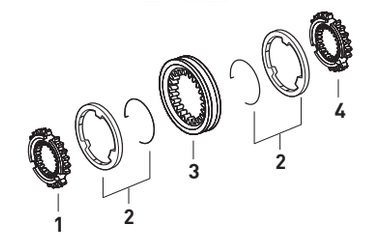


| Fig. | Kacmaz No. | Oem No | Oem Old No | Pcs. | Ürün Tanımı | Description |
|---|---|---|---|---|---|---|
| | K21.03705 | | | Kit | PRİZ./6.VİTES SENK.KİT | SYNCH.KIT Const./5th |
| 1 | K21.03024 | 389 262 5434 | (945 262 0334) | 1 | PRİZDİREK SENKROMENÇ | ENGAGING RING |
| | | | (945 262 0134) | | | |
| 2 | K21.03015 | 389 262 0637 | (387 262 0837) | 2 | PRİZ.6.VİTES FRENLEME (Mo) | SYNCHRONIZING CONE / Mo |
| 3 | K21.03002 | 945 262 2823 | (945 262 0323) | 1 | PRİZ.VE 6.VİTES HALKA | ENGAGING SLEEVE |
| 4 | K21.06108 | 389 262 9834 | | 1 | 6.VİTES SENKROMENÇ | ENGAGING RING |

SYNCHRONIZER KIT 3rd/4th
NEW MODEL

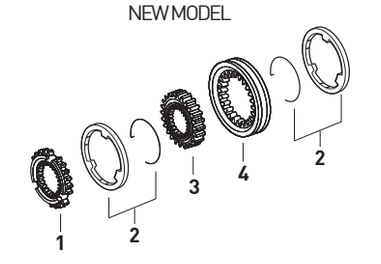


| Fig. | Kacmaz No. | Oem No | Oem Old No | Pcs. | Ürün Tanımı | Description |
|---|---|---|---|---|---|---|
| | K21.06228 | | | Kit | 3./4.VİTES SENK.KİT | SYNCH.KIT 3rd/4th |
| 1 | K21.06110 | 945 262 6134 | | 1 | 4.VİTES SENKROMENÇ | ENGAGING RING |
| 2 | K21.03136 | 945 260 2245 | (946 262 6337) | 2 | 3./4.VİTES FRENLEME (Mo) | SYNCHRONIZING CONE / Mo |
| 3 | K21.06112 | 389 262 4435 | | 1 | 3./4.VİTES YILDIZ DİŞLİ | SYNCHRONIZER HUB |
| 4 | K21.06105 | 945 262 5723 | | 1 | 3./4.VİTES HALKA | ENGAGING SLEEVE |

SYNCHRONIZER KIT 3rd/4th
NEW MODEL

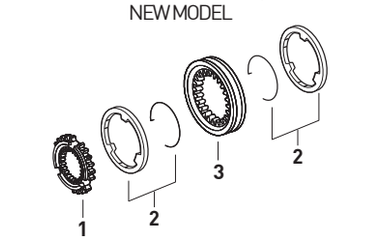


| Fig. | Kacmaz No. | Oem No | Oem Old No | Pcs. | Ürün Tanımı | Description |
|---|---|---|---|---|---|---|
| | K21.03701 | | | Kit | 3./4.VİTES SENK.KİT | SYNCH.KIT 3rd/4th |
| 1 | K21.06110 | 945 262 6134 | | 1 | 4.VİTES SENKROMENÇ | ENGAGING RING |
| 2 | K21.03136 | 945 260 2245 | (946 262 6337) | 2 | 3./4.VİTES FRENLEME (Mo) | SYNCHRONIZING CONE / Mo |
| 3 | K21.06105 | 945 262 5723 | | 1 | 3./4.VİTES HALKA | ENGAGING SLEEVE |



**Original parts names, oem numbers, symbols and descriptions used in this catalogue are for reference purposes only.**

| Fig. | Kacmaz No. | Oem No | Oem Old No | Pcs. | Ürün Tanımı | Description |
|---|---|---|---|---|---|---|
| | K21.06229 | | | Kit | 3./4.VİTES SENK.KİT | SYNCH.KIT 3rd/4th |
| 1 | K21.06111 | 945 262 5034 | (389 262 5734) | 1 | 4.VİTES SENKROMENÇ | ENGAGING RING |
| 2 | K21.03015 | 389 262 0637 | (387 262 0837) | 2 | 3./4.VİTES FRENLEME (Mo) | SYNCHRONIZING CONE / Mo |
| 3 | K21.06112 | 389 262 4435 | | 1 | 3./4.VİTES YILDIZ DİŞLİ | GUIDE SLEEVE |
| 4 | K21.06106 | 389 262 2023 | | 1 | 3./4.VİTES HALKA | ENGAGING SLEEVE |

SYNCHRONIZER KIT 3rd/4th
OLD MODEL

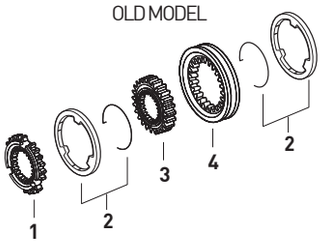


| Fig. | Kacmaz No. | Oem No | Oem Old No | Pcs. | Ürün Tanımı | Description |
|---|---|---|---|---|---|---|
| | K21.06860 | | | Kit | 3./4.VİT.SENK.KİT | SYNCH.KIT 3rd/4th |
| 1 | K21.06111 | 945 262 5034 | (389 262 5734) | 1 | 4.VİTES SENKROMENÇ | ENGAGING RING |
| 2 | K21.03015 | 389 262 0637 | (387 262 6137) | 2 | 3./4.VİTES FRENLEME (Mo) | SYNCHRONIZING CONE / Mo |
| 3 | K21.06106 | 389 262 2023 | | 1 | 3./4.VİTES HALKA | ENGAGING SLEEVE |

SYNCHRONIZER KIT 3rd/4th
OLD MODEL

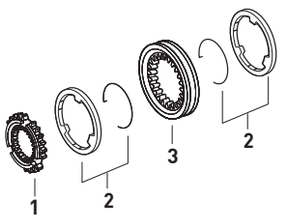


| Fig. | Kacmaz No. | Oem No | Oem Old No | Pcs. | Ürün Tanımı | Description |
|---|---|---|---|---|---|---|
| | K21.06230 | | | Kit | 1./2.VİT.SENK.KİT | SYNCH.KIT 1st/2nd |
| 1 | K21.06117 | 945 262 6034 | | 1 | 2.VİTES SENKROMENÇ | ENGAGING RING |
| 2 | K21.03148 | 947 260 1945 | (947 260 4645) | 2 | 1./2.VİTES FRENLEME (Mo) | SYNCHRONIZING CONE / Mo |
| | | | (946 262 6137) | | | |
| 3 | K21.06119 | 389 262 5635 | (389 262 3335) | 1 | 1./2.VİTES YILDIZ DİŞLİ | GUIDE SLEEVE |
| 4 | K21.06120 | 945 262 5623 | | 1 | 1./2.VİTES HALKA | ENGAGING SLEEVE |
| 5 | K21.06122 | 945 262 5934 | | 1 | 1.VİTES SENKROMENÇ | ENGAGING RING |

SYNCHRONIZER KIT 1st/2nd
NEW MODEL

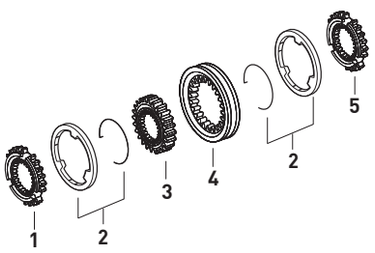


| Fig. | Kacmaz No. | Oem No | Oem Old No | Pcs. | Ürün Tanımı | Description |
|---|---|---|---|---|---|---|
| | K21.06861 | | | Kit | 1./2.VİT.SENK.KİT | SYNCH.KIT 1st/2nd |
| 1 | K21.06117 | 945 262 6034 | | 1 | 2.VİTES SENKROMENÇ | ENGAGING RING |
| 2 | K21.03148 | 947 260 1945 | (947 260 4645) | 2 | 1./2.VİTES FRENLEME (Mo) | SYNCHRONIZING CONE / Mo |
| | | | (946 262 3137) | | | |
| 3 | K21.06120 | 945 262 5623 | | 1 | 1./2.VİTES HALKA | ENGAGING SLEEVE |
| 4 | K21.06122 | 945 262 5934 | | 1 | 1.VİTES SENKROMENÇ | ENGAGING RING |

SYNCHRONIZER KIT 1st/2nd
NEW MODEL

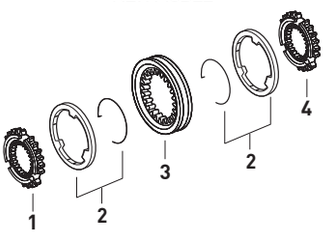


| Fig. | Kacmaz No. | Oem No | Oem Old No | Pcs. | Ürün Tanımı | Description |
|---|---|---|---|---|---|---|
| | K21.06231 | | | Kit | 1./2.VİT.SENK.KİT | SYNCH.KIT 1st/2nd |
| 1 | K21.06118 | 945 262 4934 | (389 262 8334) | 1 | 2.VİTES SENKROMENÇ | ENGAGING RING |
| 2 | K21.03016 | 389 262 0737 | (387 262 0937) | 2 | 1./2.VİTES FRENLEME (Mo) | SYNCHRONIZING CONE / Mo |
| 3 | K21.06119 | 389 262 5635 | (389 262 3335) | 1 | 1./2.VİTES YILDIZ DİŞLİ | GUIDE SLEEVE |
| 4 | K21.06121 | 389 262 2123 | | 1 | 1./2.VİTES HALKA | ENGAGING SLEEVE |
| 5 | K21.06123 | 945 262 4834 | (389 262 8234) | 1 | 1.VİTES SENKROMENÇ | ENGAGING RING |

SYNCHRONIZER KIT 1st/2nd
OLD MODEL

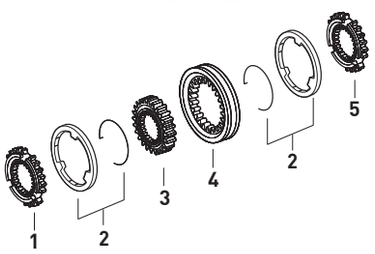


| Fig. | Kacmaz No. | Oem No | Oem Old No | Pcs. | Ürün Tanımı | Description |
|---|---|---|---|---|---|---|
| | K21.06862 | | | Kit | 1./2.VİT.SENK.KİT | SYNCH.KIT 1st/2nd |
| 1 | K21.06118 | 945 262 4934 | (389 262 8334) | 1 | 2.VİTES SENKROMENÇ | ENGAGING RING |
| 2 | K21.03016 | 389 262 0737 | (387 262 0937) | 2 | 1./2.VİTES FRENLEME (Mo) | SYNCHRONIZING CONE / Mo |
| 3 | K21.06121 | 389 262 2123 | | 1 | 1./2.VİTES HALKA | ENGAGING SLEEVE |
| 4 | K21.06123 | 945 262 4834 | (389 262 8234) | 1 | 1.VİTES SENKROMENÇ | ENGAGING RING |

SYNCHRONIZER KIT 1st/2nd
OLD MODEL

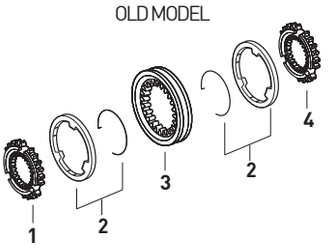




Original parts names, oem numbers, symbols and descriptions used in this catalogue are for reference purposes only.

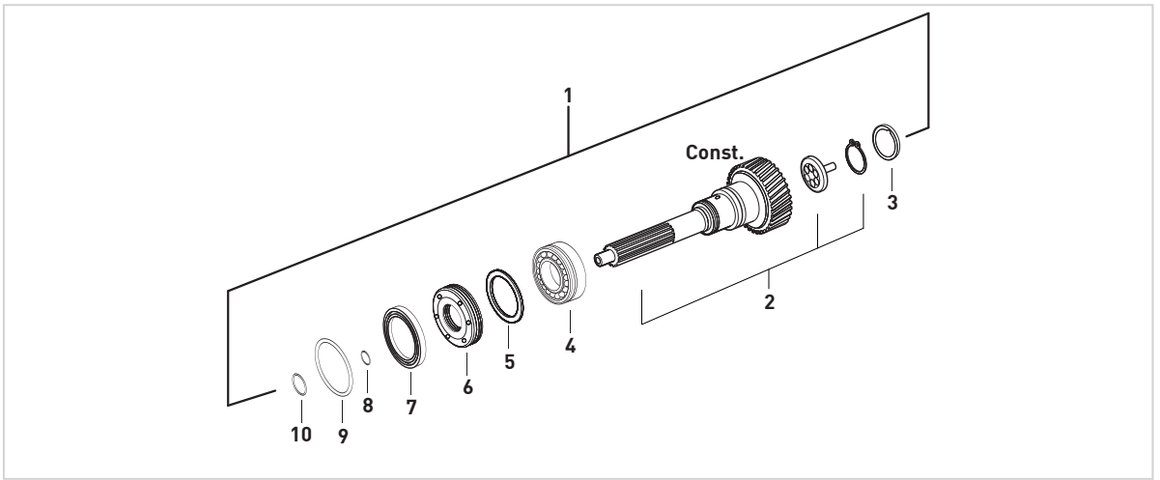


| Fig. | Kacmaz No. | Oem No | Oem Old No | Pcs. | Ürün Tanımı | Description | Sizes |
|---|---|---|---|---|---|---|---|
| 1 | K21.06486 | | | Kit | PRİZDİREK KOMPLE | INPUT SHAFT COMPLETE | |
| 2 | K21.06155 | 656 262 6082 | (389 262 6602) | 1 | PRİZDİREK 30 DİŞ | INPUT SHAFT 30 T. | |
| 3 | K21.03539 | 017 997 9947 | (018 997 7347) | 1 | PRİZDİREK ARKA KEÇE | OIL SEAL | 75X94X11,5mm |
| 4 | K21.03618 | 011 981 1305 | (014 981 9005) | 1 | PRİZDİREK ÖN BİLYA | ROLLER BEARING | 75X140X34,25mm |
| 5 | K21.04162 | 389 262 4152 | (389 262 0955) | 1 | PRİZDİREK AYAR RAYNELİ | THRUST WASHER | 0,10mm |
| 5 | K21.06715 | 389 262 3055 | | 1 | PRİZDİREK AYAR RAYNELİ | THRUST WASHER | 0,25mm |
| 5 | K21.04221 | 389 262 3255 | | 1 | PRİZDİREK AYAR RAYNELİ | THRUST WASHER | 0,31mm |
| 6 | K21.06038 | 389 261 0665 | (389 261 0865) | 1 | YAĞ TUTUCU DİSK | OIL BAFFLE | 75X16mm |
| 7 | K21.03509 | 019 997 0547 | (023 997 7847) | 1 | PRİZDİREK KEÇESİ | OIL SEAL | 56X72X8mm |
| 8 | K21.06636 | 015 997 4048 | (020 997 8748) | 1 | PRİZDİREK KEÇE KAPAK ORİNGİ | O-RING | 5X3mm |
| 9 | K21.06635 | 020 997 7848 | | 1 | PRİZDİREK KEÇE KAPAK ORİNGİ | O-RING | 138X3mm |
| 10 | K21.06637 | 019 997 8348 | (020 997 7948) | 1 | PRİZDİREK KEÇE KAPAK ORİNGİ | O-RING | 14X4mm |

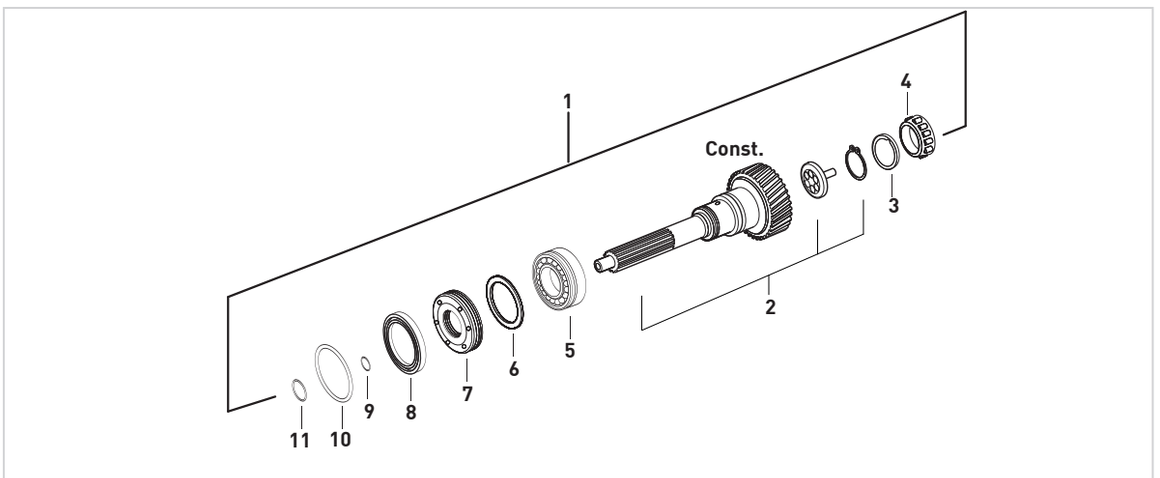


| Fig. | Kacmaz No. | Oem No | Oem Old No | Pcs. | Ürün Tanımı | Description | Sizes |
|---|---|---|---|---|---|---|---|
| 1 | K21.03853 | 655 260 2320 01 | | Kit | PRİZDİREK KOMPLE (BİLYALI) | INPUT SHAFT COMPLETE (WITH BEARING) | |
| 2 | K21.06155 | 656 262 6082 | (389 262 6602) | 1 | PRİZDİREK 30 DİŞ | INPUT SHAFT 30 T. | |
| 3 | K21.03539 | 017 997 9947 | (018 997 7347) | 1 | PRİZDİREK ARKA KEÇE | OIL SEAL | 75X94X11,5mm |
| 4 | K21.03619 | 015 981 1605 | (013 981 1105) | 1 | KAMALI MİL UÇ BİLYA | ROLLER BEARING | 39,69X40,39mm |
| 5 | K21.03618 | 011 981 1305 | (014 981 9005) | 1 | PRİZDİREK ÖN BİLYA | ROLLER BEARING | 75X140X34,25mm |
| 6 | K21.04162 | 389 262 4152 | (389 262 0955) | 1 | PRİZDİREK AYAR RAYNELİ | THRUST WASHER | 0,10mm |
| 6 | K21.06715 | 389 262 3055 | | 1 | PRİZDİREK AYAR RAYNELİ | THRUST WASHER | 0,25mm |
| 6 | K21.04221 | 389 262 3255 | | 1 | PRİZDİREK AYAR RAYNELİ | THRUST WASHER | 0,31mm |
| 7 | K21.06038 | 389 261 0665 | (389 261 0865) | 1 | YAĞ TUTUCU DİSK | OIL BAFFLE | 75X16mm |
| 8 | K21.03509 | 019 997 0547 | (023 997 7847) | 1 | PRİZDİREK KEÇESİ | OIL SEAL | 56X72X8mm |
| 9 | K21.06636 | 015 997 4048 | (020 997 8748) | 1 | PRİZDİREK KEÇE KAPAK ORİNGİ | O-RING | 5X3mm |
| 10 | K21.06635 | 020 997 7848 | | 1 | PRİZDİREK KEÇE KAPAK ORİNGİ | O-RING | 138X3mm |
| 11 | K21.06637 | 019 997 8348 | (020 997 7948) | 1 | PRİZDİREK KEÇE KAPAK ORİNGİ | O-RING | 14X4mm |



**Original parts names, oem numbers, symbols and descriptions used in this catalogue are for reference purposes only.**

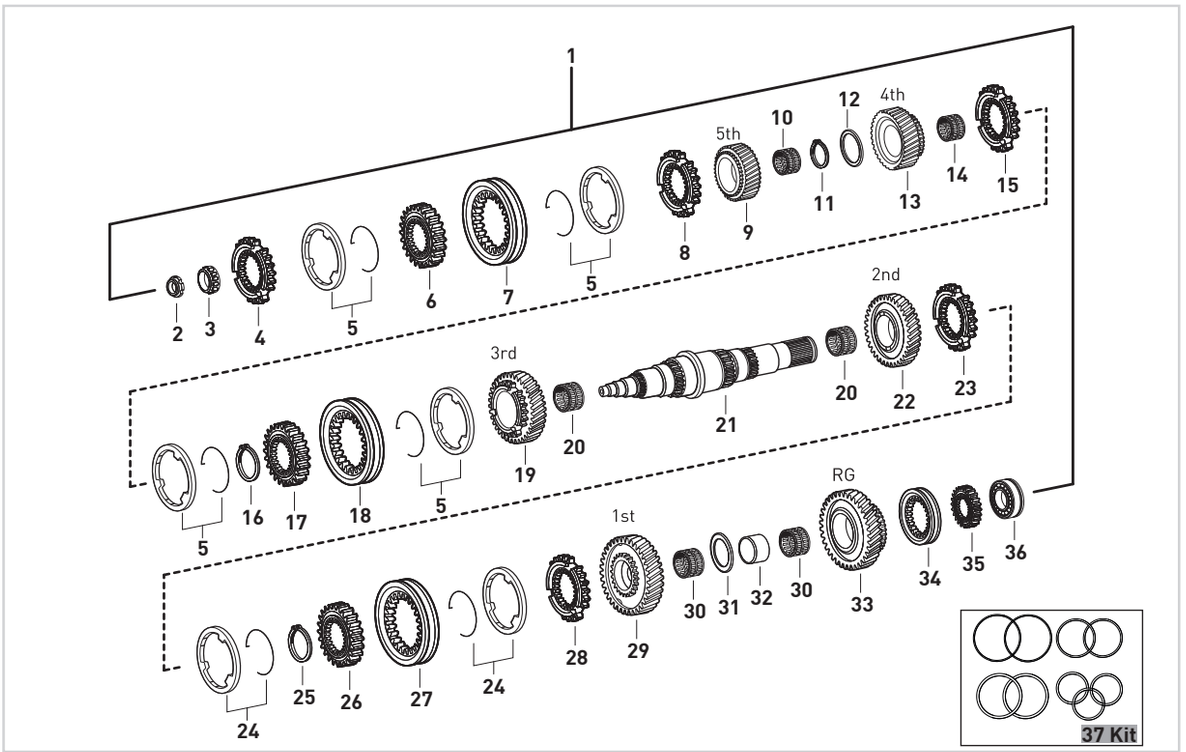


| Fig. | Kacmaz No. | Oem No | Oem Old No | Pcs. | Ürün Tanımı | Description | Sizes |
|---|---|---|---|---|---|---|---|
| 1 | K21.06386 | | | kit | KAMALI MİL KOMPLE | MAIN SHAFT COMPLETE | |
| 2 | K21.03432 | 945 990 0250 | (945 990 0150) | 1 | KAMALI MİL SOMUNU | NUT | M30X1,5 |
| 3 | K21.03619 | 015 981 1605 | (013 981 1105) | 1 | KAMALI MİL UÇ BİLYA | ROLLER BEARING | 39,69X40,39mm |
| 4 | K21.03024 | 389 262 5434 | (945 262 0334) | 1 | PRİZDİREK SENKROMENÇ | ENGAGING RING | |
| 5 | K21.03015 | 389 262 0637 | (387 262 0837) | 4 | PRİZ/6./3./4.VİTES FRENLEME (Mo) | SYNCHRONIZING CONE / Mo | |
| 6 | K21.06104 | 389 262 5335 | | 1 | PRİZDİREK VE 6.VİTES YILDIZ DİŞLİ | SYNCHRONIZER HUB | |
| 7 | K21.03002 | 945 262 2823 | (945 262 0323) | 1 | PRİZDİREK VE 6.VİTES HALKA | ENGAGING SLEEVE | |
| 8 | K21.06108 | 389 262 9834 | | 1 | 6.VİTES SENKROMENÇ | ENGAGING RING | |
| 9 | K21.06161 | 389 262 0716 | (389 262 0116) | 1 | 6.VİTES DİŞLİSİ 26 DİŞ | GEAR 6th 26 T. | |
| 10 | K21.03833 | 019 981 6010 | (019 981 5810) | 1 | 6.VİTES MASURA BİLYA | NEEDLE CAGE | 60X68X54mm |
| 11 | K21.06908 | 389 262 3973 | | 1 | 4./5.VİTES ARA SEKMANI | RETANING RING | 2,75mm |
| 12 | K21.04143 | 389 262 1862 | | 1 | 4./6.VİTES ARA PULU | THRUST WASHER | |
| 13 | K21.03247 | 389 262 0814 | (389 262 0114) | 1 | 4.VİTES DİŞLİSİ 35 DİŞ | GEAR 4th 35 T. | |
| 14 | K21.03803 | 009 981 1510 | (017 981 7810) | 1 | 4.VİTES MASURA BİLYA | NEEDLE CAGE | 78X86X35mm |
| 15 | K21.06111 | 945 262 5034 | (389 262 5734) | 1 | 4.VİTES SENKROMENÇ | ENGAGING RING | |
| 16 | K21.06924 | 389 262 0373 | | 1 | 3./4.VİTES YILDIZ DİŞLİ SEKMANI | RETANING RING | 3,00mm |
| 17 | K21.06112 | 389 262 4435 | | 1 | 3./4.VİTES YILDIZ DİŞLİ | SYNCHRONIZER HUB | |
| 18 | K21.06106 | 389 262 2023 | | 1 | 3./4.VİTES HALKA | ENGAGING SLEEVE | |
| 19 | K21.06114 | 656 262 4413 | (389 262 3513) | 1 | 3.VİTES DİŞLİSİ 40 DİŞ | GEAR 3rd 40 T. | |
| 20 | K21.03845 | 008 981 8610 | (007 981 5510) | 2 | 2./3.VİTES MASURA BİLYA | NEEDLE CAGE | 92X100X49,5mm |
| 21 | K21.06115 | 656 262 0805 | (389 262 4605) | 1 | KAMALI MİL | MAIN SHAFT | |
| 22 | K21.03254 | 976 262 1612 | (389 262 2712) | 1 | 2.VİTES DİŞLİSİ 45 DİŞ | GEAR 2nd 45 T. | |
| 23 | K21.06118 | 945 262 4934 | (389 262 8334) | 1 | 2.VİTES SENKROMENÇ | ENGAGING RING | |
| 24 | K21.03016 | 389 262 0737 | (387 262 0937) | 2 | 1./2.VİTES FRENLEME (Mo) | SYNCHRONIZING CONE / Mo | |
| 25 | K21.06906 | 387 262 4373 | | 1 | 1./2.VİTES ARA SEKMANI | RETANING RING | 3,00mm |
| 26 | K21.06119 | 389 262 5635 | (389 262 3335) | 1 | 1./2.VİTES YILDIZ DİŞLİ | SYNCHRONIZER HUB | |
| 27 | K21.06121 | 389 262 2123 | | 1 | 1./2.VİTES HALKA | ENGAGING SLEEVE | |
| 28 | K21.06123 | 945 262 4834 | (389 262 8234) | 1 | 1.VİTES SENKROMENÇ | ENGAGING RING | |
| 29 | K21.06124 | 656 262 0211 | (389 262 3311) | 1 | 1.VİTES DİŞLİSİ 50 DİŞ | GEAR 1st 50 T. | |
| 30 | K21.03847 | 021 981 9410 | (019 981 6210) | 2 | 1.VE GERİ VİTES MASURA BİLYA | NEEDLE CAGE | 85X93X45mm |
| 31 | K21.04284 | 389 262 2855 | | 1 | 1.VİTES MESAFE AYAR PULU | THRUST WASHER | 5,50mm |
| 32 | K21.06125 | 389 262 2250 | (389 262 2450) | 1 | 1.VİTES MASURA BİLYA ÇANAĞI | BEARING RACE | |
| 33 | K21.06126 | 389 262 2233 | (389 262 2733) | 1 | GERİ VİTES DİŞLİSİ 47 DİŞ | REVERSE GEAR 47 T. | |
| 34 | K21.03060 | 389 262 1723 | (389 262 0023) | 1 | GERİ VİTES HALKASI | ENGAGING SLEEVE | |
| 35 | K21.06128 | 945 262 7035 | (389 262 4135) | 1 | GERİ VİTES YILDIZ DİŞLİ | SYNCHRONIZER HUB | |
| 36 | K21.03658 | 012 981 3705 | (018 981 6705) | 1 | KAMALI MİL ARKA BİLYA | ROLLER BEARING | 65X140X13,5mm |
| 37 | K21.04329 | | | Kit | RAYNEL TAKIMI | THRUST WASHER KIT | |





Original parts names, oem numbers, symbols and descriptions used in this catalogue are for reference purposes only.

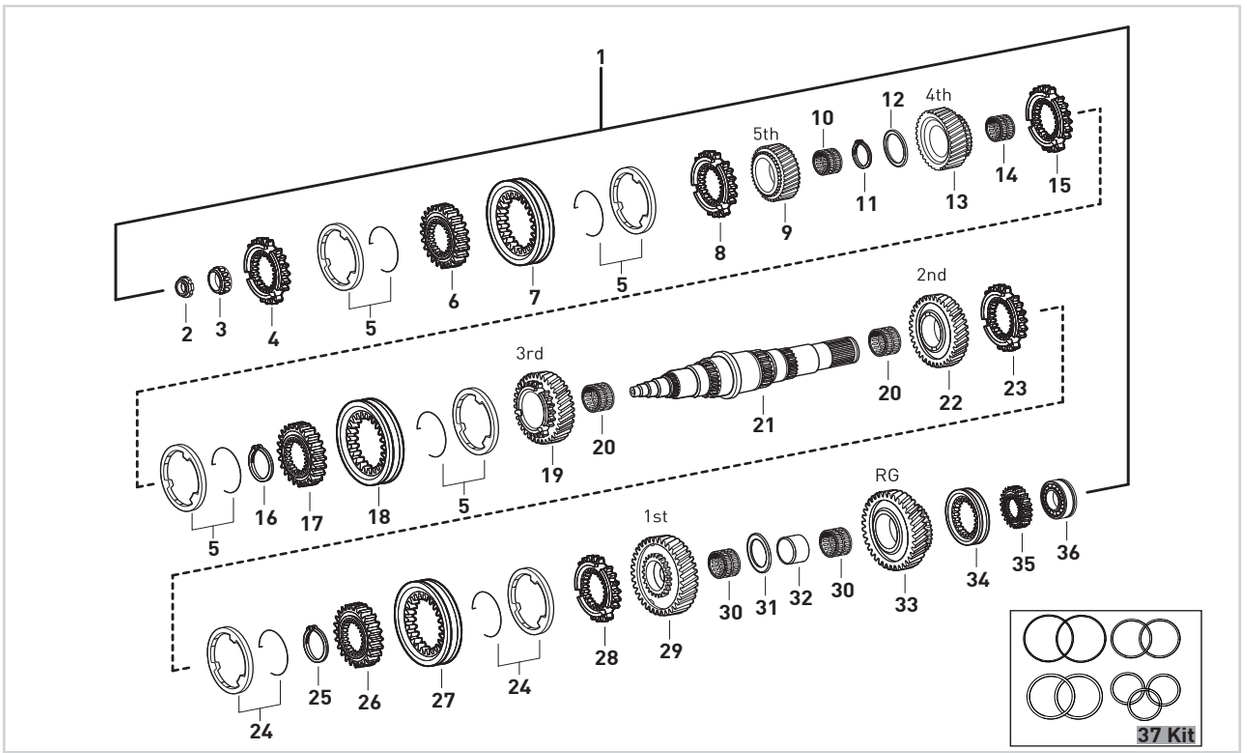


| Fig. | Kacmaz No. | Oem No | Oem Old No | Pcs. | Ürün Tanımı | Description | Sizes |
|---|---|---|---|---|---|---|---|
| 1 | K21.06338 | | | Kit | KAMALI MİL KOMPLE | MAIN SHAFT COMPLETE | |
| 2 | K21.03432 | 945 990 0250 | (945 990 0150) | 1 | KAMALI MİL SOMUNU | NUT | M30X1,5 |
| 3 | K21.03619 | 015 981 1605 | (013 981 1105) | 1 | KAMALI MİL UÇ BİLYA | ROLLER BEARING | 39,69X40,39mm |
| 4 | K21.03147 | 945 262 7734 | (945 262 3634) | 1 | PRİZDİREK SENKROMENÇ | ENGAGING RING | |
| 5 | K21.03136 | 945 260 2245 | (946 262 6337) | 4 | PRİZ./6./4./3.VİTES FRENLEME (Mo) | SYNCHRONIZING CONE / Mo | |
| 6 | K21.06304 | 656 262 0335 | (656 262 0435) | 1 | PRİZDİREK VE 6.VİTES YILDIZ DİŞLİ | SYNCHRONIZER HUB | |
| 7 | K21.03137 | 945 262 6823 | (945 262 6423) | 1 | PRİZDİREK VE 5.VİTES HALKA | ENGAGING SLEEVE | |
| 8 | K21.06314 | 656 262 0434 | | 1 | 6.VİTES SENKROMENÇ | ENGAGING RING | |
| 9 | K21.06263 | 656 262 0016 | | 1 | 6.VİTES DİŞLİSİ 24 DİŞ | GEAR 6th 24 T. | |
| 10 | K21.03852 | 023 981 3710 | | 1 | 6.VİTES MASURA BİLYA | NEEDLE CAGE | 60X66X54mm |
| 11 | K21.06913 | 389 262 3473 | | 1 | 4./6.VİTES ARA SEKMANI | RETANING RING | 2,50mm |
| 12 | K21.04143 | 389 262 1862 | | 1 | 4./6.VİTES ARA PULU | THRUST WASHER | |
| 13 | K21.03247 | 389 262 0814 | (389 262 0114) | 1 | 4.VİTES DİŞLİSİ 35 DİŞ | GEAR 4th 35 T. | |
| 14 | K21.03803 | 009 981 1510 | (017 981 7810) | 1 | 4.VİTES MASURA BİLYA | NEEDLE CAGE | 78X86X35mm |
| 15 | K21.06110 | 945 262 6134 | | 1 | 4.VİTES SENKROMENÇ | ENGAGING RING | |
| 16 | K21.06924 | 389 262 0373 | | 1 | 3./4.VİTES YILDIZ DİŞLİ SEKMANI | RETANING RING | 3,00mm |
| 17 | K21.06112 | 389 262 4435 | | 1 | 3./4.VİTES YILDIZ DİŞLİ | SYNCHRONIZER HUB | |
| 18 | K21.06105 | 945 262 5723 | | 1 | 3./4.VİTES HALKA | ENGAGING SLEEVE | |
| 19 | K21.06113 | 945 262 6417 | | 1 | 3.VİTES DİŞLİSİ 40 DİŞ | GEAR 3rd 40 T. | |
| 20 | K21.03845 | 008 981 8610 | (007 981 5510) | 2 | 2./3.VİTES MASURA BİLYA | NEEDLE CAGE | 92X100X49,5mm |
| 21 | K21.06115 | 656 262 0805 | (389 262 4605) | 1 | KAMALI MİL | MAIN SHAFT | |
| 22 | K21.03254 | 976 262 1612 | (389 262 2712) | 1 | 2.VİTES DİŞLİSİ 45 DİŞ | GEAR 2nd 45 T. | |
| 23 | K21.06117 | 945 262 6034 | | 1 | 2.VİTES SENKROMENÇ | ENGAGING RING | |
| 24 | K21.03148 | 947 260 1945 | (947 260 4645) | 2 | 1./2.VİTES FRENLEME (Mo) | SYNCHRONIZING CONE / Mo | |
| 25 | K21.06922 | 387 262 4573 | | 1 | 1./2.VİTES YILDIZ DİŞLİ SEKMANI | RETANING RING | 3,10mm |
| 26 | K21.06119 | 389 262 5635 | (389 262 3335) | 1 | 1./2.VİTES YILDIZ DİŞLİ | SYNCHRONIZER HUB | |
| 27 | K21.06120 | 945 262 5623 | | 1 | 1./2.VİTES HALKA | ENGAGING SLEEVE | |
| 28 | K21.06122 | 945 262 5934 | | 1 | 1.VİTES SENKROMENÇ | ENGAGING RING | |
| 29 | K21.06124 | 656 262 0211 | (389 262 3311) | 1 | 1.VİTES DİŞLİSİ 50 DİŞ | GEAR 1st 50 T. | |
| 30 | K21.03847 | 021 981 9410 | (019 981 6210) | 2 | 1.VE GERİ VİTES MASURA BİLYA | NEEDLE CAGE | 85X93X45mm |
| 31 | K21.04284 | 389 262 2855 | | 1 | 1.VİTES MESAFE AYAR PULU | THRUST WASHER | 5,50mm |
| 32 | K21.06125 | 389 262 2250 | (389 262 2450) | 1 | 1.VİTES MASURA BİLYA ÇANAĞI | BEARING RACE | |
| 33 | K21.06126 | 389 262 2233 | (389 262 2733) | 1 | GERİ VİTES DİŞLİSİ 47 DİŞ | REVERSE GEAR 47 T. | |
| 34 | K21.03060 | 389 262 1723 | (389 262 0023) | 1 | GERİ VİTES HALKASI | ENGAGING SLEEVE | |
| 35 | K21.06128 | 945 262 7035 | (389 262 4135) | 1 | GERİ VİTES YILDIZ DİŞLİ | SYNCHRONIZER HUB | |
| 36 | K21.03658 | 012 981 3705 | (018 981 6705) | 1 | KAMALI MİL ARKA BİLYA | ROLLER BEARING | 65X140X13,5mm |
| 37 | K21.04329 | | | Kit | RAYNEL TAKIMI | THRUST WASHER KIT | |



**Original parts names, oem numbers, symbols and descriptions used in this catalogue are for reference purposes only.**

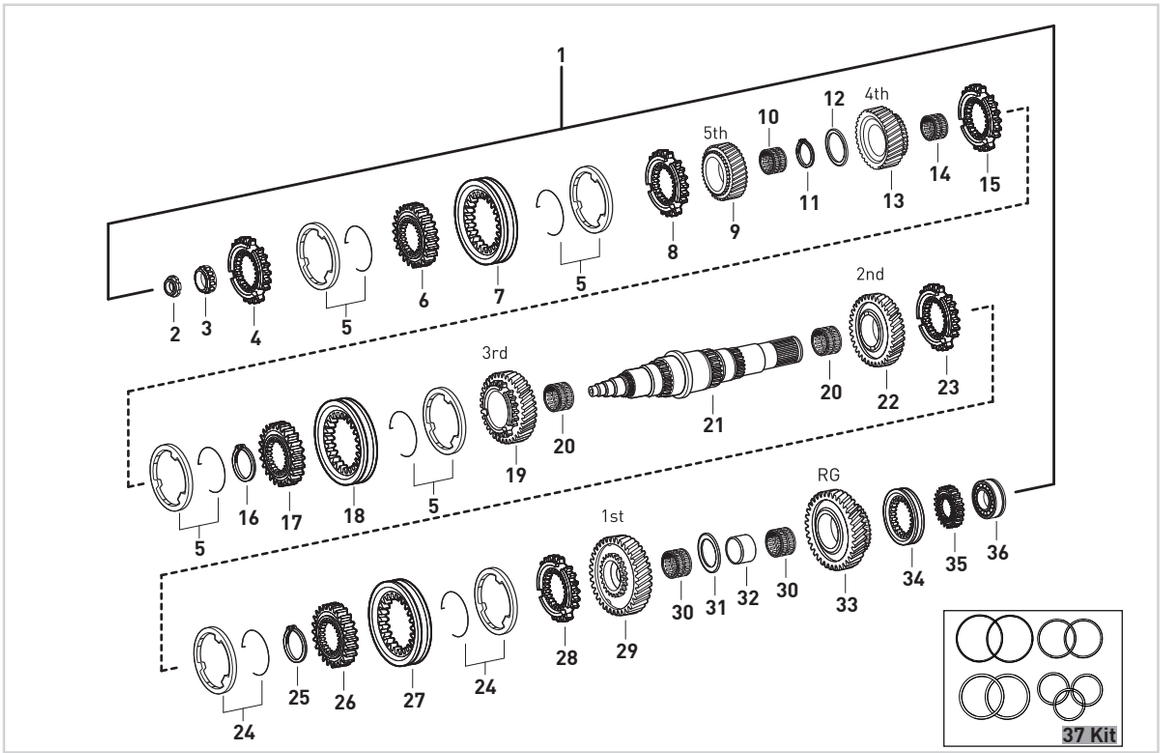


| Fig. | Kacmaz No. | Oem No | Oem Old No | Pcs. | Ürün Tanımı | Description | Sizes |
|---|---|---|---|---|---|---|---|
| 1 | K21.06339 | | | kit | KAMALI MİL KOMPLE | MAIN SHAFT COMPLETE | |
| 2 | K21.03432 | 945 990 0250 | (945 990 0150) | 1 | KAMALI MİL SOMUNU | NUT | M30X1,5 |
| 3 | K21.03619 | 015 981 1605 | (013 981 1105) | 1 | KAMALI MİL UÇ BİLYA | ROLLER BEARING | 39,69X40,39mm |
| 4 | K21.03147 | 945 262 7734 | (945 262 3634) | 1 | PRİZDİREK SENKROMENÇ | ENGAGING RING | |
| 5 | K21.03136 | 945 260 2245 | (946 262 6337) | 4 | PRİZ./6./4./3.VİTES FRENLEME (Mo) | SYNCHRONIZING CONE / Mo | |
| 6 | K21.06104 | 389 262 5335 | | 1 | PRİZDİREK VE 6.VİTES YILDIZ DİŞLİ | SYNCHRONIZER HUB | |
| 7 | K21.03137 | 945 262 6823 | (945 262 6423) | 1 | PRİZDİREK VE 5.VİTES HALKA | ENGAGING SLEEVE | |
| 8 | K21.06107 | 945 262 7134 | | 1 | 6.VİTES SENKROMENÇ | ENGAGING RING | |
| 9 | K21.06161 | 389 262 0716 | (389 262 0116) | 1 | 6.VİTES DİŞLİSİ 26 DİŞ | GEAR 6th 26 T. | |
| 10 | K21.03833 | 019 981 6010 | (019 981 5810) | 1 | 6.VİTES MASURA BİLYA | NEEDLE CAGE | 60X68X54mm |
| 11 | K21.06913 | 389 262 3473 | | 1 | 4./6.VİTES ARA SEKMANI | RETANING RING | 2,50mm |
| 12 | K21.04143 | 389 262 1862 | | 1 | 4./6.VİTES ARA PULU | THRUST WASHER | |
| 13 | K21.03247 | 389 262 0814 | (389 262 0114) | 1 | 4.VİTES DİŞLİSİ 35 DİŞ | GEAR 4th 35 T. | |
| 14 | K21.03803 | 009 981 1510 | (017 981 7810) | 1 | 4.VİTES MASURA BİLYA | NEEDLE CAGE | 78X86X35mm |
| 15 | K21.06110 | 945 262 6134 | | 1 | 4.VİTES SENKROMENÇ | ENGAGING RING | |
| 16 | K21.06921 | 389 262 0573 | | 1 | 3./4.VİTES YILDIZ DİŞLİ SEKMANI | RETANING RING | 3,10mm |
| 17 | K21.06112 | 389 262 4435 | | 1 | 3./4.VİTES YILDIZ DİŞLİ | SYNCHRONIZER HUB | |
| 18 | K21.06105 | 945 262 5723 | | 1 | 3./4.VİTES SENK.HALKA | ENGAGING SLEEVE | |
| 19 | K21.06113 | 945 262 6417 | | 1 | 3.VİTES DİŞLİSİ 40 DİŞ | GEAR 3rd 40 T. | |
| 20 | K21.03845 | 008 981 8610 | (007 981 5510) | 2 | 2./3.VİTES MASURA BİLYA | NEEDLE CAGE | 92X100X49,5mm |
| 21 | K21.06115 | 656 262 0805 | (389 262 4605) | 1 | KAMALI MİL | MAIN SHAFT | |
| 22 | K21.03254 | 976 262 1612 | (389 262 2712) | 1 | 2.VİTES DİŞLİSİ 45 DİŞ | GEAR 2nd 45 T. | |
| 23 | K21.06117 | 945 262 6034 | | 1 | 2.VİTES SENKROMENÇ | ENGAGING RING | |
| 24 | K21.03148 | 947 260 1945 | (947 260 4645) | 2 | 1./2.VİTES FRENLEME (Mo) | SYNCHRONIZING CONE / Mo | |
| 25 | K21.06923 | 387 262 4473 | | 1 | 1./2.VİTES YILDIZ DİŞLİ SEKMANI | RETANING RING | 3,05mm |
| 26 | K21.06119 | 389 262 5635 | (389 262 3335) | 1 | 1./2.VİTES YILDIZ DİŞLİ | SYNCHRONIZER HUB | |
| 27 | K21.06120 | 945 262 5623 | | 1 | 1./2.VİTES SENK.HALKA | ENGAGING SLEEVE | |
| 28 | K21.06122 | 945 262 5934 | | 1 | 1.VİTES SENKROMENÇ | ENGAGING RING | |
| 29 | K21.06124 | 656 262 0211 | (389 262 3311) | 1 | 1.VİTES DİŞLİSİ 50 DİŞ | GEAR 1st 50 T. | |
| 30 | K21.03847 | 021 981 9410 | (019 981 6210) | 2 | 1.VE GERİ VİTES MASURA BİLYA | NEEDLE CAGE | 85X93X45mm |
| 31 | K21.04284 | 389 262 2855 | | 1 | 1.VİTES MESAFE AYAR PULU | THRUST WASHER | 5,50mm |
| 32 | K21.06125 | 389 262 2250 | (389 262 2450) | 1 | 1.VİTES MASURA BİLYA ÇANAĞI | BEARING RACE | |
| 33 | K21.06126 | 389 262 2233 | (389 262 2733) | 1 | GERİ VİTES DİŞLİSİ 47 DİŞ | REVERSE GEAR 47 T. | |
| 34 | K21.03060 | 389 262 1723 | (389 262 0023) | 1 | GERİ VİTES HALKASI | ENGAGING SLEEVE | |
| 35 | K21.06128 | 945 262 7035 | (389 262 4135) | 1 | GERİ VİTES YILDIZ DİŞLİ | SYNCHRONIZER HUB | |
| 36 | K21.03658 | 012 981 3705 | (018 981 6705) | 1 | KAMALI MİL ARKA BİLYA | ROLLER BEARING | 65X140X13,5mm |
| 37 | K21.04329 | | | Kit | RAYNEL TAKIMI | THRUST WASHER KIT | |



Original parts names, oem numbers, symbols and descriptions used in this catalogue are for reference purposes only.

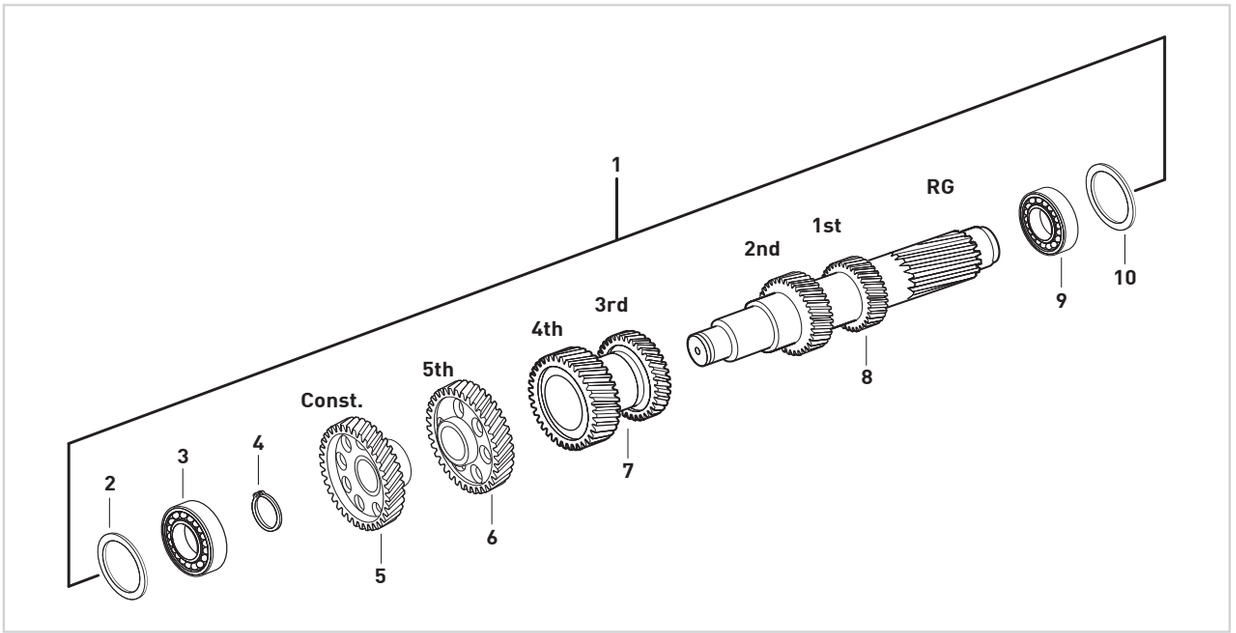


## OLD TYPE

| Fig. | Kacmaz No. | Oem No | Oem Old No | Pcs. | Ürün Tanımı | Description | Sizes |
|---|---|---|---|---|---|---|---|
| 1 | K21.06336 | | | Kit | GRUP MİLİ KOMPLE | COUNTER SHAFT COMPLETE | |
| 2 | K21.04192 | 406 337 0252 | | 1 | GRUP MİLİ ÖN BİLYA RAYNELİ | THRUST WASHER | 0,10mm |
| 2 | K21.04150 | 406 337 0352 | | 1 | GRUP MİLİ ÖN BİLYA RAYNELİ | THRUST WASHER | 0,20mm |
| 2 | K21.94150 | | | 1 | GRUP MİLİ ÖN BİLYA RAYNELİ | THRUST WASHER | 0,25mm |
| 3 | K21.03606 | 015 981 9005 | (014 981 1405) | 1 | GRUP MİLİ ÖN BİLYA | ROLLER BEARING | 50,8X100X35mm |
| 4 | K21.06426 | 900055 060300 | (000 264 5351) | 1 | GRUP MİLİ ÖN BİLYA SEKMANI | RETAINING RING | 3,00mm |
| 5 | K21.06162 | 389 263 1910 | (389 263 2710) | 1 | PRİZDİREK DİŞLİ KARŞILIĞI 47 DİŞ | CONSTANT GEAR 47 T. | |
| 6 | K21.06163 | 389 263 0116 | | 1 | 6.VİTES DİŞLİ KARŞILIĞI 51 DİŞ | GEAR 6th 51 T. | |
| 7 | K21.06141 | 656 263 0013 | (389 263 2713) | 1 | 3./4.VİT.DİŞLİ KARŞILIĞI 28/38 DİŞ | DOUBLE GEAR 3rd/4th 28/38 T. | |
| | | | (389 263 2813) | | | | |
| | | | (389 263 3013) | | | | |
| 8 | K21.06142 | 389 263 3402 | (389 263 2102) | 1 | GRUP MİLİ 12/19 DİŞ | COUNTER SHAFT 12/19 T. | |
| | | | (389 263 2302) | | | | |
| 9 | K21.03660 | 012 981 3605 | (015 981 4105) | 1 | GRUP MİLİ ARKA BİLYA | ROLLER BEARING | 45X110X12mm |
| 10 | K21.04326 | | | 1 | GRUP MİLİ ARKA BİLYA RAYNELİ | THRUST WASHER | 0,25mm |
| 10 | K21.04325 | | | 1 | GRUP MİLİ ARKA BİLYA RAYNELİ | THRUST WASHER | 0,30mm |

## NEW TYPE

| Fig. | Kacmaz No. | Oem No | Oem Old No | Pcs. | Ürün Tanımı | Description | Sizes |
|---|---|---|---|---|---|---|---|
| 1 | K21.06335 | | | Kit | GRUP MİLİ KOMPLE | COUNTER SHAFT COMPLETE | |
| 2 | K21.04192 | 406 337 0252 | | 1 | GRUP MİLİ ÖN BİLYA RAYNELİ | THRUST WASHER | 0,10mm |
| 2 | K21.04150 | 406 337 0352 | | 1 | GRUP MİLİ ÖN BİLYA RAYNELİ | THRUST WASHER | 0,20mm |
| 2 | K21.94150 | | | 1 | GRUP MİLİ ÖN BİLYA RAYNELİ | THRUST WASHER | 0,25mm |
| 3 | K21.03606 | 015 981 9005 | (014 981 1405) | 1 | GRUP MİLİ ÖN BİLYA | ROLLER BEARING | 50,8X100X35mm |
| 4 | K21.06426 | 900055 060300 | (000 264 5351) | 1 | GRUP MİLİ ÖN BİLYA SEKMANI | RETAINING RING | 3,00mm |
| 5 | K21.06162 | 389 263 1910 | (389 263 2710) | 1 | PRİZDİREK DİŞLİ KARŞILIĞI 47 DİŞ | CONSTANT GEAR 47 T. | |
| 6 | K21.06262 | 656 263 0016 | | 1 | 6.VİTES DİŞLİ KARŞILIĞI 52 DİŞ | GEAR 6th 52 T. | |
| 7 | K21.06141 | 656 263 0013 | (389 263 2713) | 1 | 3./4.VİT.DİŞLİ KARŞILIĞI 28/38 DİŞ | DOUBLE GEAR 3rd/4th 28/38 T. | |
| | | | (389 263 2813) | | | | |
| | | | (389 263 3013) | | | | |
| 8 | K21.06142 | 389 263 3402 | (389 263 2102) | 1 | GRUP MİLİ 12/19 DİŞ | COUNTER SHAFT 12/19 T. | |
| | | | (389 263 2302) | | | | |
| 9 | K21.03660 | 012 981 3605 | (015 981 4105) | 1 | GRUP MİLİ ARKA BİLYA | ROLLER BEARING | 45X110X12mm |
| 10 | K21.04326 | | | 1 | GRUP MİLİ ARKA BİLYA RAYNELİ | THRUST WASHER | 0,25mm |
| 10 | K21.04325 | | | 1 | GRUP MİLİ ARKA BİLYA RAYNELİ | THRUST WASHER | 0,30mm |



**Original parts names, oem numbers, symbols and descriptions used in this catalogue are for reference purposes only.**

# NOTES / NOTLAR



Original parts names, oem numbers, symbols and descriptions used in this catalogue are for reference purposes only.

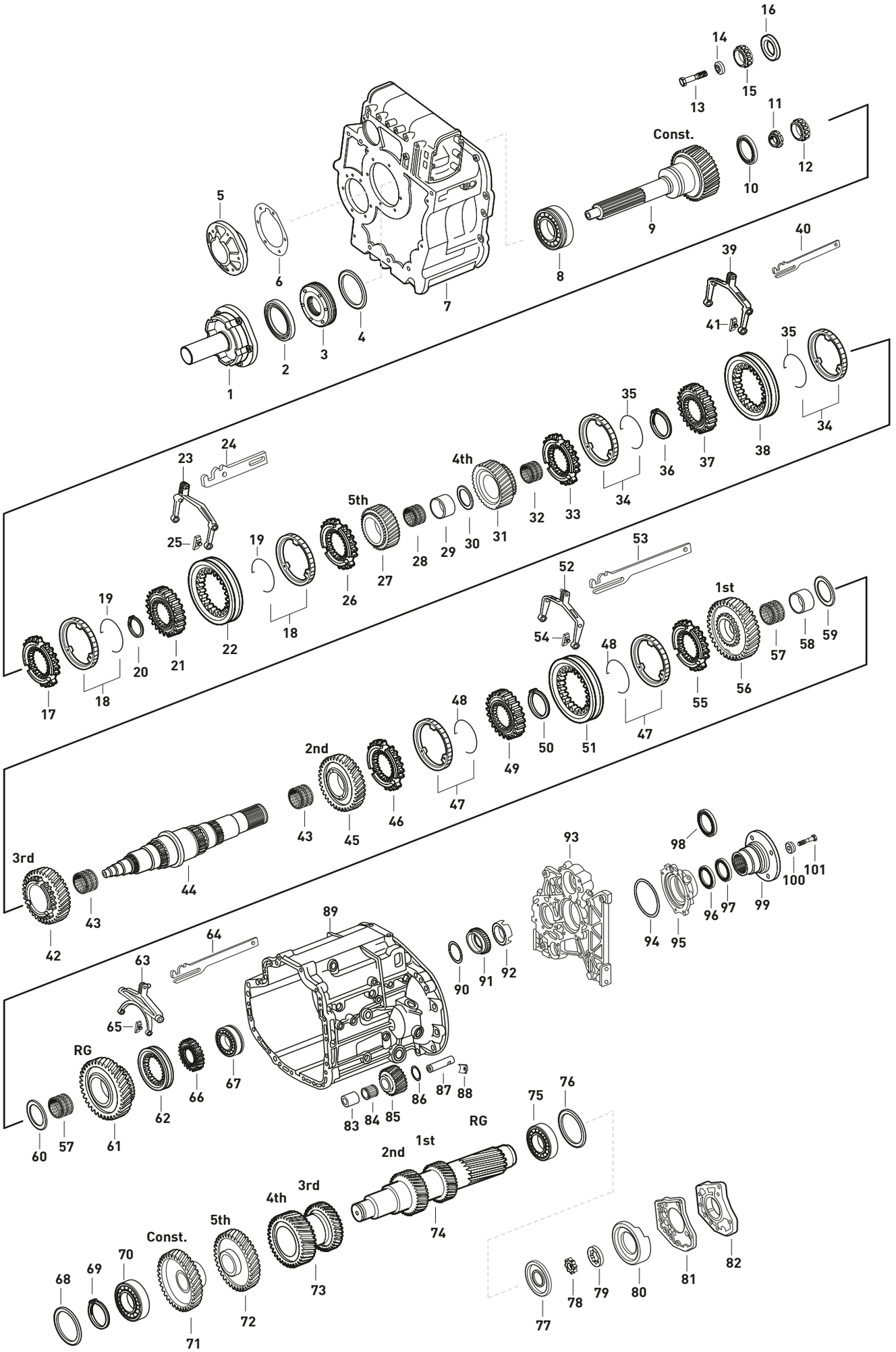




Original parts names, oem numbers, symbols and descriptions used in this catalogue are for reference purposes only.

| Fig. | Kacmaz No | Oem No | Oem Old No | Pcs. | Ürün Tanımı | Description | Sizes | Not | GO 4-160 |
|---|---|---|---|---|---|---|---|---|---|
| 1 | | 389 261 4318 | | 1 | PRİZDİREK KEÇE KAPAĞI | COVER | | | ♦ |
| 2 | K21.03521 | 015 997 1647 | (015 997 0647) | 1 | PRİZDİREK KEÇESİ | OIL SEAL | 52X68X8mm | | ♦ |
| | | | (024 997 2147) | | | | | | |
| 3 | K21.06038 | 389 261 0665 | (389 261 0765) | 1 | YAĞ TUTUCU DİSK | OIL BAFFLE | 75X16mm | | ♦ |
| | | | (389 261 0865) | | | | | | |
| 4 | K21.04162 | 389 262 4152 | (389 262 0955) | 1 | PRİZDİREK AYAR RAYNELİ | THRUST WASHER | 0,10mm | | ♦ |
| 4 | K21.04243 | 389 262 0855 | | 1 | PRİZDİREK AYAR RAYNELİ | THRUST WASHER | 0,15mm | | ♦ |
| 4 | K21.04151 | 389 262 0755 | | 1 | PRİZDİREK AYAR RAYNELİ | THRUST WASHER | 0,20mm | | ♦ |
| 4 | K21.06715 | 389 262 3055 | | 1 | PRİZDİREK AYAR RAYNELİ | THRUST WASHER | 0,25mm | | ♦ |
| 4 | K21.04221 | 389 262 3255 | | 1 | PRİZDİREK AYAR RAYNELİ | THRUST WASHER | 0,31mm | | ♦ |
| 4 | K21.04163 | 389 262 3555 | (389 262 0655) | 1 | PRİZDİREK AYAR RAYNELİ | THRUST WASHER | 0,40mm | | ♦ |
| | | | (389 262 4452) | | | | | | |
| 4 | K21.04164 | 389 262 3755 | (389 262 1954) | 1 | PRİZDİREK AYAR RAYNELİ | THRUST WASHER | 0,46mm | | ♦ |
| 4 | K21.04246 | 389 262 3855 | | 1 | PRİZDİREK AYAR RAYNELİ | THRUST WASHER | 0,49mm | | ♦ |
| 4 | K21.04250 | 389 262 4055 | (389 262 0155) | 1 | PRİZDİREK AYAR RAYNELİ | THRUST WASHER | 0,55mm | | ♦ |
| | | | (389 262 2154) | | | | | | |
| 4 | K21.04167 | 389 262 4255 | (389 262 2254) | 1 | PRİZDİREK AYAR RAYNELİ | THRUST WASHER | 0,61mm | | ♦ |
| 4 | K21.04168 | 389 262 4355 | (389 262 2354) | 1 | PRİZDİREK AYAR RAYNELİ | THRUST WASHER | 0,64mm | | ♦ |
| 4 | K21.04169 | 389 262 4555 | (389 262 2454) | 1 | PRİZDİREK AYAR RAYNELİ | THRUST WASHER | 0,70mm | | ♦ |
| 4 | K21.04170 | 389 262 4755 | (389 262 2554) | 1 | PRİZDİREK AYAR RAYNELİ | THRUST WASHER | 0,76mm | | ♦ |
| 4 | K21.04281 | 389 262 4855 | (389 262 0555) | 1 | PRİZDİREK AYAR RAYNELİ | THRUST WASHER | 0,79mm | | ♦ |
| 4 | K21.04282 | 389 262 5555 | | 1 | PRİZDİREK AYAR RAYNELİ | THRUST WASHER | 1,00mm | | ♦ |
| 4 | K21.04171 | 389 262 9654 | (389 262 2654) | 1 | PRİZDİREK AYAR RAYNELİ | THRUST WASHER | 2,00mm | | ♦ |
| 5 | | 389 261 1933 | (389 261 0633) | 1 | GRUP MİLİ ÖN BİLYA KAPAĞI | COVER | | | ♦ |
| | | | (389 262 0133) | | | | | | |
| 6 | | 387 261 1580 | (387 261 4580) | 1 | PRİZDİREK KEÇE KAPAK CONTASI | GASKET | | | ♦ |
| 7 | | 389 261 9902 | | 1 | ŞANZIMAN ÖN GÖVDE | HOUSING | | | ♦ |
| 8 | K21.03618 | 011 981 1305 | (014 981 9005) | 1 | PRİZDİREK ÖN BİLYA | ROLLER BEARING | 75X140X34,25mm | | ♦ |
| | | | (008 981 8605) | | | | | | |
| | | | (008 981 2605) | | | | | | |
| 9 | K21.06247 | 389 262 3102 | | 1 | PRİZDİREK 26 DİŞ | INPUT SHAFT 26 T | | | ♦ |
| 10 | K21.03539 | 017 997 9947 | (018 997 7347) | 1 | PRİZDİREK ARKA KEÇE | OIL SEAL | 75X94X11,5mm | | ♦ |
| | | | (018 997 4947) | | | | | | |
| 11 | K21.03432 | 945 990 0250 | (945 990 0150) | 1 | KAMALI MİL SOMUNU | NUT | M30X1,5 | (1) | ♦ |
| 12 | K21.03619 | 015 981 1605 | (013 981 1105) | 1 | KAMALI MİL UÇ BİLYA | ROLLER BEARING | 39,69X40,39mm | (1) | ♦ |
| 13 | K21.03407 | 389 990 1819 | | 1 | KAMALI MİL UÇ VİDA (Sol Diş) | SCREW (Bools-L-teeth) | | (2) | ♦ |
| 14 | K21.04126 | 389 262 0062 | | 1 | KAMALI MİL UÇ VİDA PULU | WASHER | | (2) | ♦ |
| 15 | | 009 981 8205 | | 1 | KAMALI MİL UÇ BİLYA | ROLLER BEARING | 38,10X40,39mm | (2) | ♦ |
| 16 | | 389 262 9252 | | 1 | KAMALI MİL UÇ BİLYA PULU | THRUST WASHER | 0,10mm | (2) | ♦ |
| 16 | | 389 262 9352 | | 1 | KAMALI MİL UÇ BİLYA PULU | THRUST WASHER | 0,15mm | (2) | ♦ |
| 16 | | 389 262 1055 | | 1 | KAMALI MİL UÇ BİLYA PULU | THRUST WASHER | 0,70mm | (2) | ♦ |
| 17 | K21.03003 | 389 262 1134 | | 1 | PRİZDİREK SENKROMENÇ | ENGAGING RING | | (A) | ♦ |
| 17 | K21.06295 | 389 262 8534 | | 1 | PRİZDİREK SENKROMENÇ | ENGAGING RING | | (B) | ♦ |
| 18 | K21.03015 | 389 262 0637 | (387 262 0837) | 2 | PRİZDİREK VE 5.VİTES FRENLEME (Mo) | SYNCHRONIZING CONE / Mo | | | ♦ |
| | | | (389 262 1037) | | | | | | |
| 19 | K21.03044 | 387 262 1093 | (387 262 0693) | 2 | FRENLEME TELİ | SPRING | | | ♦ |
| | | | (960 262 1393) | | | | | | |
| 20 | | 000471 040002 | | 1 | PRİZ.VE 5.VİT.YILDIZ DİŞLİ SEKMANI | RETAINING RING | | | ♦ |
| 21 | K21.03243 | 389 262 1935 | | 1 | PRİZ.VE 5.VİTES YILDIZ DİŞLİ 60 DİŞ | SYNCHRONIZER HUB 60 T. | | (A) | ♦ |
| 21 | K21.06296 | 389 262 4535 | | 1 | PRİZ.VE 5.VİTES YILDIZ DİŞLİ 72 DİŞ | SYNCHRONIZER HUB 72 T. | | (B) | ♦ |
| 22 | K21.03002 | 945 262 2823 | (945 262 0323) | 1 | PRİZDİREK VE 5.VİTES HALKA | ENGAGING SLEEVE | | (A) | ♦ |
| | | | (945 262 0623) | | | | | | |
| | | | (389 262 4123) | | | | | | |

NOTES :
Parts encoded alphabetic and numaric are used together.

NOTLAR :
Alfabetik ve rakam ile kodlanan parçalar birlikte kullanılır.





Original parts names, oem numbers, symbols and descriptions used in this catalogue are for reference purposes only.

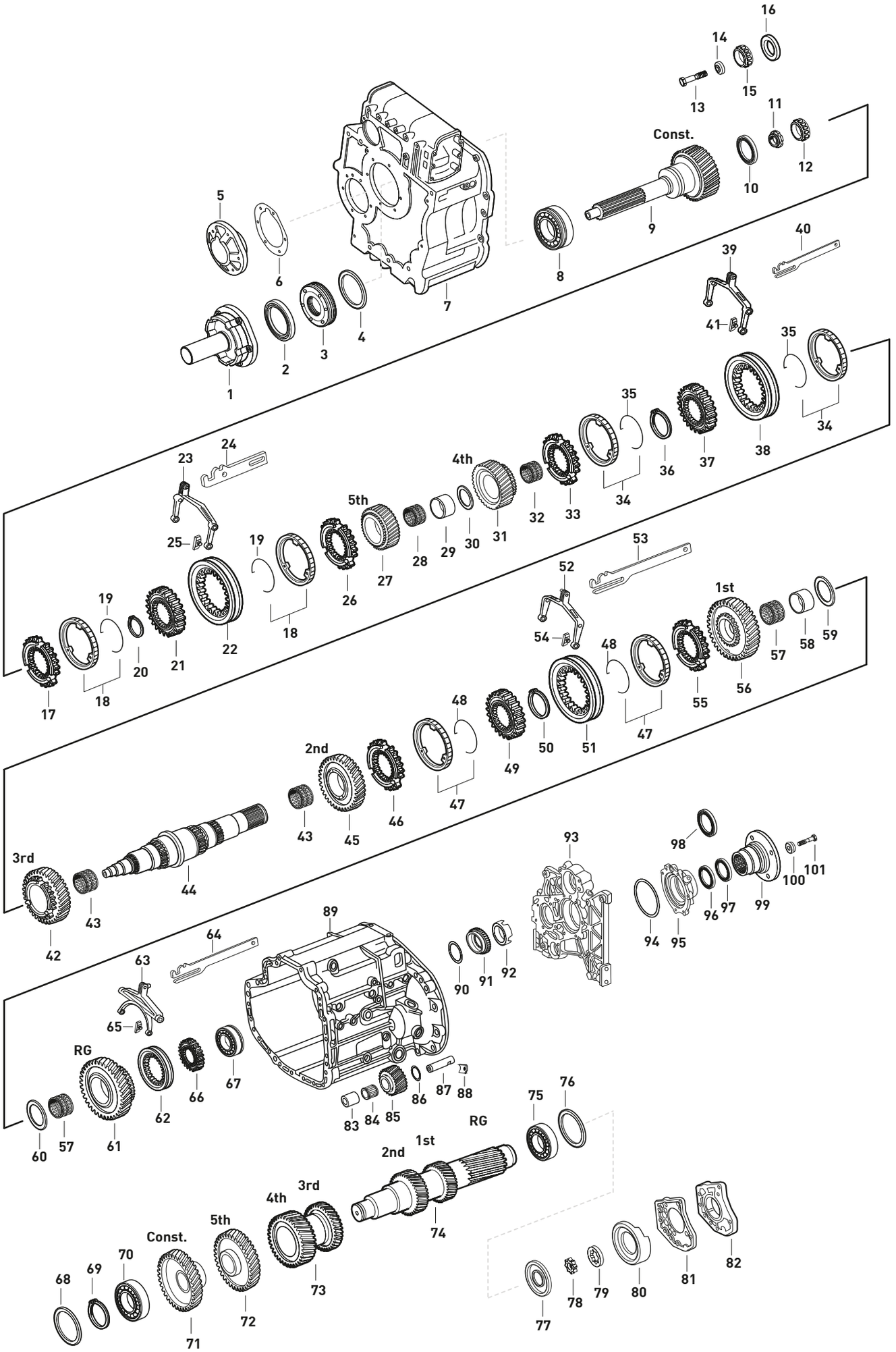






Original parts names, oem numbers, symbols and descriptions used in this catalogue are for reference purposes only.

| Fig. | Kacmaz No | Oem No | Oem Old No | Pcs. | Ürün Tanımı | Description | Sizes | Not | GO 4-160 |
|---|---|---|---|---|---|---|---|---|---|
| 22 | K21.06106 | 389 262 2023 | | 1 | PRİZDİREK VE 5.VİTES HALKA | ENGAGING SLEEVE | | (B) | ♦ |
| 23 | K21.06404 | 389 260 4130 | (389 260 2930) | 1 | 5.VİTES HİLALİ | SHIFTING FORK 5th | | | ♦ |
| 24 | | 389 265 9904 | (389 265 7304) | 1 | 5.VİTES HİLAL ÇITASI | SHIFTING ROD 5th | | | ♦ |
| 25 | K21.03431 | 960 265 0049 | (947 265 0349) | 2 | PRİZ./5.VİTES HİLAL PABUCU | SLIDING PAD | | | ♦ |
| | | | (389 265 2749) | | | | | | |
| 26 | K21.03007 | 945 262 4034 | (389 262 5334) | 1 | 5.VİTES SENKROMENÇ | ENGAGING RING | | (A) | ♦ |
| | | | (945 262 4434) | | | | | | |
| 26 | K21.06242 | 945 262 5134 | (389 262 8434) | 1 | 5.VİTES SENKROMENÇ | ENGAGING RING | | (B) | ♦ |
| 27 | K21.06289 | 389 262 1215 | (389 262 0215) | 1 | 5.VİTES DİŞLİSİ 30 DİŞ | GEAR 5th 30 T. | | | ♦ |
| 28 | | 011 981 7610 | (011 981 9510) | 1 | 5.VİTES MASURA BİLYA | NEEDLE CAGE | 75X83X58mm | | ♦ |
| | | | (019 981 0710) | | | | | | |
| 29 | K21.06293 | 389 262 0650 | (389 262 1850) | 1 | 5.VİTES DİŞLİ BURCU | BUSHING | | | ♦ |
| 30 | K21.06294 | 389 262 9052 | | 1 | 4./5.VİTES ARA PULU | WASHER | | (3) | ♦ |
| 31 | K21.03247 | 389 262 0814 | (389 262 0114) | 1 | 4.VİTES DİŞLİSİ 35 DİŞ | GEAR 4th 35 T. | | (3) | ♦ |
| | | | (389 262 0214) | | | | | | |
| | | | (389 262 0414) | | | | | | |
| | | | (389 262 0614) | | | | | | |
| | | | (389 262 0914) | | | | | | |
| | | | (389 262 1114) | | | | | | |
| | | | (976 262 0814) | | | | | | |
| 31 | | 389 262 1014 | | 1 | 4.VİTES DİŞLİSİ | GEAR 4th | | (4) | ♦ |
| 32 | K21.03803 | 009 981 1510 | (017 981 7810) | 1 | 4.VİTES MASURA BİLYA | NEEDLE CAGE | 78X86X35mm | | ♦ |
| | | | (008 981 9310) | | | | | | |
| | | | (012 981 9110) | | | | | | |
| 33 | K21.03024 | 389 262 5434 | (945 262 0334) | 1 | 4.VİTES SENKROMENÇ | ENGAGING RING | | (A) | ♦ |
| | | | (945 262 0134) | | | | | | |
| 33 | K21.06111 | 945 262 5034 | (389 262 5734) | 1 | 4.VİTES SENKROMENÇ | ENGAGING RING | | (B) | ♦ |
| 34 | K21.03015 | 389 262 0637 | (387 262 0837) | 2 | 3./4.VİTES FRENLEME (Mo) | SYNCHRONIZING CONE / Mo | | | ♦ |
| | | | (389 262 1037) | | | | | | |
| 34 | K21.06286 | 389 262 3137 | | 2 | 3./4.VİTES FRENLEME (Mo) | SYNCHRONIZING CONE / Mo | | vertical striped | ♦ |
| 35 | K21.03044 | 387 262 1093 | (387 262 0693) | 2 | FRENLEME TELİ | SPRING | | | ♦ |
| | | | (960 262 1393) | | | | | | |
| 36 | K21.06927 | 389 262 0173 | | 1 | 3./4.VİTES YILDIZ DİŞLİ SEKMANI | RETAINING RING | 2,90mm | | ♦ |
| 36 | K21.06924 | 389 262 0373 | | 1 | 3./4.VİTES YILDIZ DİŞLİ SEKMANI | RETAINING RING | 3,00mm | | ♦ |
| 36 | K21.06921 | 389 262 0573 | | 1 | 3./4.VİTES YILDIZ DİŞLİ SEKMANI | RETAINING RING | 3,10mm | | ♦ |
| 36 | K21.06919 | 389 262 1273 | | 1 | 3./4.VİTES YILDIZ DİŞLİ SEKMANI | RETAINING RING | 3,20mm | | ♦ |
| 36 | K21.06917 | 389 262 1373 | | 1 | 3./4.VİTES YILDIZ DİŞLİ SEKMANI | RETAINING RING | 3,25mm | | ♦ |
| 36 | K21.06916 | 389 262 1473 | | 1 | 3./4.VİTES YILDIZ DİŞLİ SEKMANI | RETAINING RING | 3,30mm | | ♦ |
| 37 | K21.03248 | 389 262 2735 | | 1 | 3./4.VİTES YILDIZ DİŞLİ 60 DİŞ | SYNCHRONIZER HUB 60 T. | | (A) | ♦ |
| 37 | K21.06112 | 389 262 4435 | | 1 | 3./4.VİTES YILDIZ DİŞLİ 72 DİŞ | SYNCHRONIZER HUB 72 T. | | (B) | ♦ |
| 38 | K21.03002 | 945 262 2823 | (945 262 0323) | 1 | 3./4.VİTES HALKA | ENGAGING SLEEVE | | (A) | ♦ |
| | | | (945 262 0623) | | | | | | |
| | | | (389 262 4123) | | | | | | |
| | | | (389 262 2723) | | | | | | |
| 38 | K21.06106 | 389 262 2023 | | 1 | 3./4.VİTES HALKA | ENGAGING SLEEVE | | (B) | ♦ |
| 39 | K21.06403 | 389 260 3930 | (389 260 2430) | 1 | 3./4.VİTES HİLALİ | SHIFTING FORK 3rd/4th | | | ♦ |
| 40 | | 389 265 7604 | | 1 | 3./4.VİTES HİLAL ÇITASI | SHIFTING ROD | | | ♦ |
| 41 | K21.03431 | 960 265 0049 | (947 265 0349) | 2 | 3./4.VİTES HİLAL PABUCU | SLIDING PAD | | | ♦ |
| | | | (389 265 2749) | | | | | | |
| 42 | K21.03249 | 976 262 1113 | (976 262 1013) | 1 | 3.VİTES DİŞLİSİ 47 DİŞ | GEAR 3rd 47 T. | | (A) | ♦ |
| | | | (976 262 0613) | | | | | | |
| | | | (976 262 0913) | | | | | | |
| | | | (976 262 0113) | | | | | | |

NOTES :
Parts encoded alphabetic and numaric are used together.

NOTLAR :
Alfabetik ve rakam ile kodlanan parçalar birlikte kullanılır.





Original parts names, oem numbers, symbols and descriptions used in this catalogue are for reference purposes only.

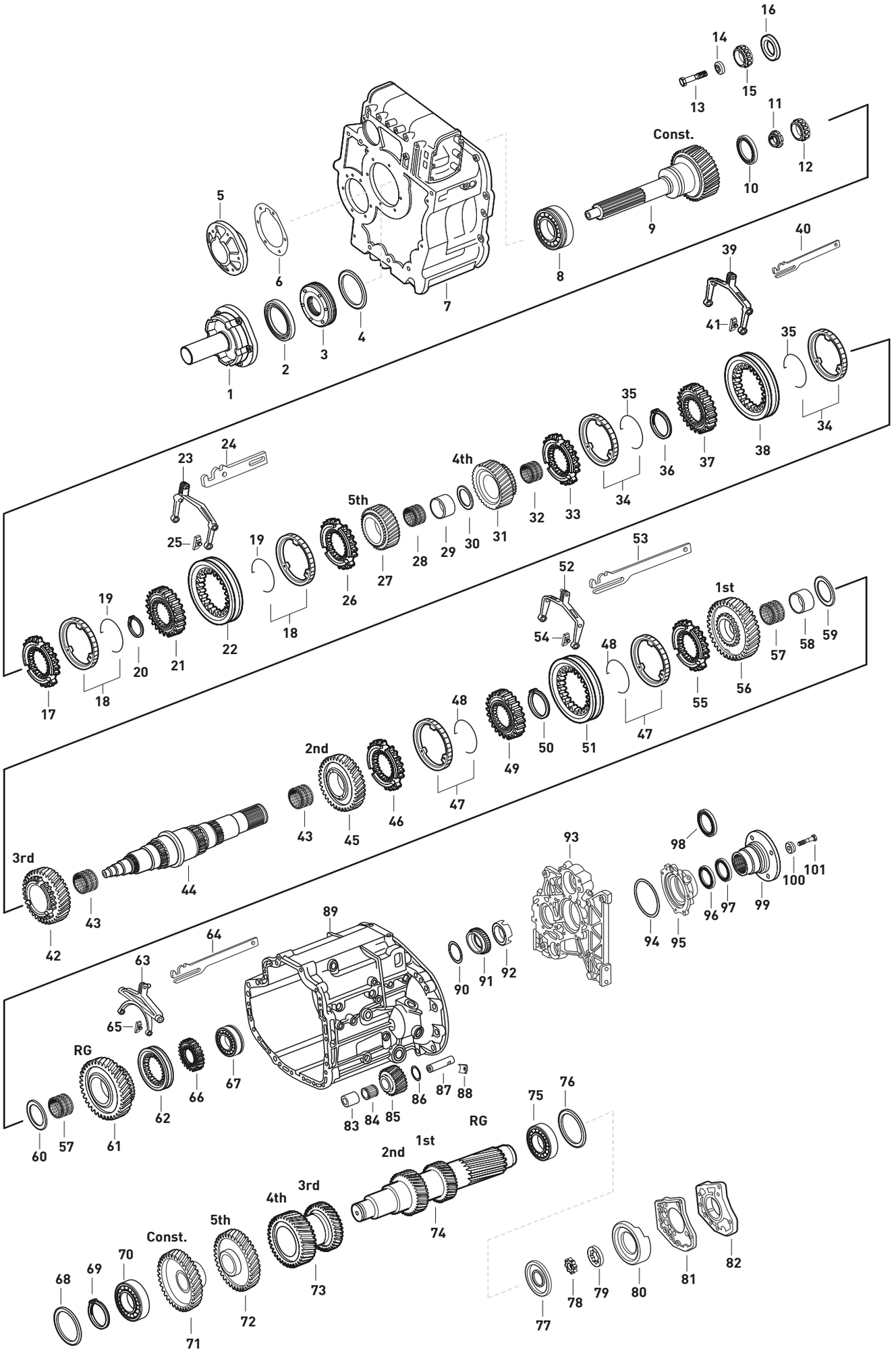






Original parts names, oem numbers, symbols and descriptions used in this catalogue are for reference purposes only.

| Fig. | Kacmaz No | Oem No | Oem Old No | Pcs. | Ürün Tanımı | Description | Sizes | Not | GO 4-160 |
|---|---|---|---|---|---|---|---|---|---|
| 42 | K21.06297 | 389 262 4013 | (389 262 3313) | 1 | 3.VİTES DİŞLİSİ 47 DİŞ | GEAR 3rd 47 T. | | (B) | ♦ |
| | | | (389 262 2413) | | | | | | |
| 43 | K21.03845 | 008 981 8610 | (007 981 5510) | 2 | 2./3.VİTES MASURA BİLYA | NEEDLE CAGE | 92X100X49,5mm | | ♦ |
| | | | (019 981 3410) | | | | | | |
| | | | (018 981 7910) | | | | | | |
| 44 | | 389 262 1705 | | 1 | KAMALI MİL | MAIN SHAFT | | (2) | ♦ |
| 44 | K21.06291 | 389 262 4405 | (389 262 2505) | 1 | KAMALI MİL | MAIN SHAFT | | (1) | ♦ |
| 45 | | 389 262 3312 | (389 262 0912) | 1 | 2.VİTES DİŞLİSİ 45 DİŞ | GEAR 2nd 45 T | | | ♦ |
| 46 | K21.03025 | 945 262 0434 | (389 262 0034) | 1 | 2.VİTES SENKROMENÇ | ENGAGING RING | | (C) | ♦ |
| 46 | K21.06118 | 945 262 4934 | (389 262 8334) | 1 | 2.VİTES SENKROMENÇ | ENGAGING RING | | (D) | ♦ |
| 47 | K21.03016 | 389 262 0737 | (387 262 0937) | 2 | 1./2.VİTES FRENLEME (Mo) | SYNCHRONIZING CONE / Mo | | | ♦ |
| | | | (389 262 1137) | | | | | | |
| 47 | K21.06287 | 389 262 3237 | | 2 | 1./2.VİTES FRENLEME (Mo) | SYNCHRONIZING CONE / Mo | | vertical striped | ♦ |
| 48 | K21.03055 | 387 262 0893 | (387 262 0793) | 2 | FRENLEME TELİ | SPRING | | | ♦ |
| 49 | K21.03256 | 389 262 1135 | | 1 | 1./2.VİTES YILDIZ DİŞLİ 66 DİŞ | SYNCHRONIZER HUB 66 T. | | (C) | ♦ |
| 49 | K21.06119 | 389 262 5635 | (389 262 3335) | 1 | 1./2.VİTES YILDIZ DİŞLİ | SYNCHRONIZER HUB | | (D) | ♦ |
| 50 | K21.06928 | 387 262 4173 | | 1 | 1./2.VİTES YILDIZ DİŞLİ SEKMANI | RETAINING RING | 2,90mm | | ♦ |
| 50 | K21.06926 | 387 262 4273 | | 1 | 1./2.VİTES YILDIZ DİŞLİ SEKMANI | RETAINING RING | 2,95mm | | ♦ |
| 50 | K21.06906 | 387 262 4373 | | 1 | 1./2.VİTES YILDIZ DİŞLİ SEKMANI | RETAINING RING | 3,00mm | | ♦ |
| 50 | K21.06923 | 387 262 4473 | | 1 | 1./2.VİTES YILDIZ DİŞLİ SEKMANI | RETAINING RING | 3,05mm | | ♦ |
| 50 | K21.06922 | 387 262 4573 | | 1 | 1./2.VİTES YILDIZ DİŞLİ SEKMANI | RETAINING RING | 3,10mm | | ♦ |
| 50 | K21.06920 | 387 262 4673 | | 1 | 1./2.VİTES YILDIZ DİŞLİ SEKMANI | RETAINING RING | 3,15mm | | ♦ |
| 50 | K21.06918 | 387 262 9773 | | 1 | 1./2.VİTES YILDIZ DİŞLİ SEKMANI | RETAINING RING | 3,20mm | | ♦ |
| 51 | K21.03009 | 945 262 2723 | (945 262 0423) | 1 | 1./2.VİTES HALKA | ENGAGING SLEEVE | | (C) | ♦ |
| | | | (389 262 2623) | | | | | | |
| 51 | K21.06121 | 389 262 2123 | | 1 | 1./2.VİTES HALKA | ENGAGING SLEEVE | | (D) | ♦ |
| 52 | | 387 260 4930 | (387 260 4730) | 1 | 1./2.VİTES HİLALİ | SHIFTING FORK | | | ♦ |
| 53 | | 389 265 7504 | | 1 | 1./2.VİTES HİLAL ÇITASI | SHIFTING ROD | | | ♦ |
| 54 | K21.03431 | 960 265 0049 | (947 265 0349) | 2 | 1./2.VİTES HİLAL PABUCU | SLIDING PAD | | | ♦ |
| | | | (389 265 2749) | | | | | | |
| 55 | K21.03025 | 945 262 0434 | (389 262 0034) | 1 | 1.VİTES SENKROMENÇ | ENGAGING RING | | (C) | ♦ |
| 55 | K21.06123 | 945 262 4834 | (389 262 8234) | 1 | 1.VİTES SENKROMENÇ | ENGAGING RING | | (D) | ♦ |
| 56 | | 389 262 1911 | | 1 | 1.VİTES DİŞLİSİ 50 DİŞ | GEAR 1th 50 T | | | ♦ |
| 57 | K21.03847 | 021 981 9410 | (008 981 8510) | 2 | 1.VE GERİ VİTES MASURA BİLYA | NEEDLE CAGE | 85X93X45mm | | ♦ |
| | | | (008 981 9810) | | | | | | |
| | | | (019 981 0610) | | | | | | |
| | | | (019 981 6210) | | | | | | |
| 58 | | 389 262 0950 | | 1 | GERİ VİTES BURCU | BUSHING | | (2) | ♦ |
| 58 | | 389 262 1750 | | 1 | GERİ VİTES BURCU | BUSHING | | (1) | ♦ |
| 59 | K21.04284 | 389 262 2855 | | 1 | 1.VİTES MESAFE AYAR PULU | WASHER | 5,50mm | | ♦ |
| 60 | K21.04285 | 389 262 8852 | | 1 | 1.VİTES DENGELEME PULU | WASHER | | | ♦ |
| 61 | | 389 262 1333 | | 1 | GERİ VİTES DİŞLİSİ 47 DİŞ | REVERSE GEAR 47 T | | | ♦ |
| 62 | K21.03061 | 389 262 1823 | (389 262 0923) | 1 | GERİ VİTES HALKASI | ENGAGING SLEEVE | | EPS | ♦ |
| 62 | K21.03060 | 389 262 1723 | (389 262 0023) | 1 | GERİ VİTES HALKASI | ENGAGING SLEEVE | | MPS | ♦ |
| 63 | | 656 260 0230 | (389 260 0330) | 1 | GERİ VİTES HİLALİ | SHIFTING FORK | | | ♦ |
| | | | (389 260 2630) | | | | | | |
| 64 | | 389 260 2831 | | 1 | GERİ VİTES HİLAL ÇITASI | SHIFTING ROD | | | ♦ |
| 65 | K21.03410 | 947 265 0249 | (945 265 0149) | 2 | GERİ VİTES HİLAL PABUCU | SLIDING PAD | | | ♦ |
| 66 | K21.06127 | 389 262 4235 | | 1 | GERİ VİTES YILDIZ DİŞLİ | SYNCHRONIZER HUB | | EPS | ♦ |
| 66 | K21.06128 | 945 262 7035 | (389 262 4135) | 1 | GERİ VİTES YILDIZ DİŞLİ | SYNCHRONIZER HUB | | MPS | ♦ |
| 67 | | 009 981 8305 | (009 981 8905) | 1 | KAMALI MİL ARKA BİLYA | ROLLER BEARING | 65X140X36mm | (2) | ♦ |
| | | | (009 981 9005) | | | | | | |
| | | | (009 981 9805) | | | | | | |

NOTES :
Parts encoded alphabetic and numaric are used together.

NOTLAR :
Alfabetik ve rakam ile kodlanan parçalar birlikte kullanılır.





Original parts names, oem numbers, symbols and descriptions used in this catalogue are for reference purposes only.

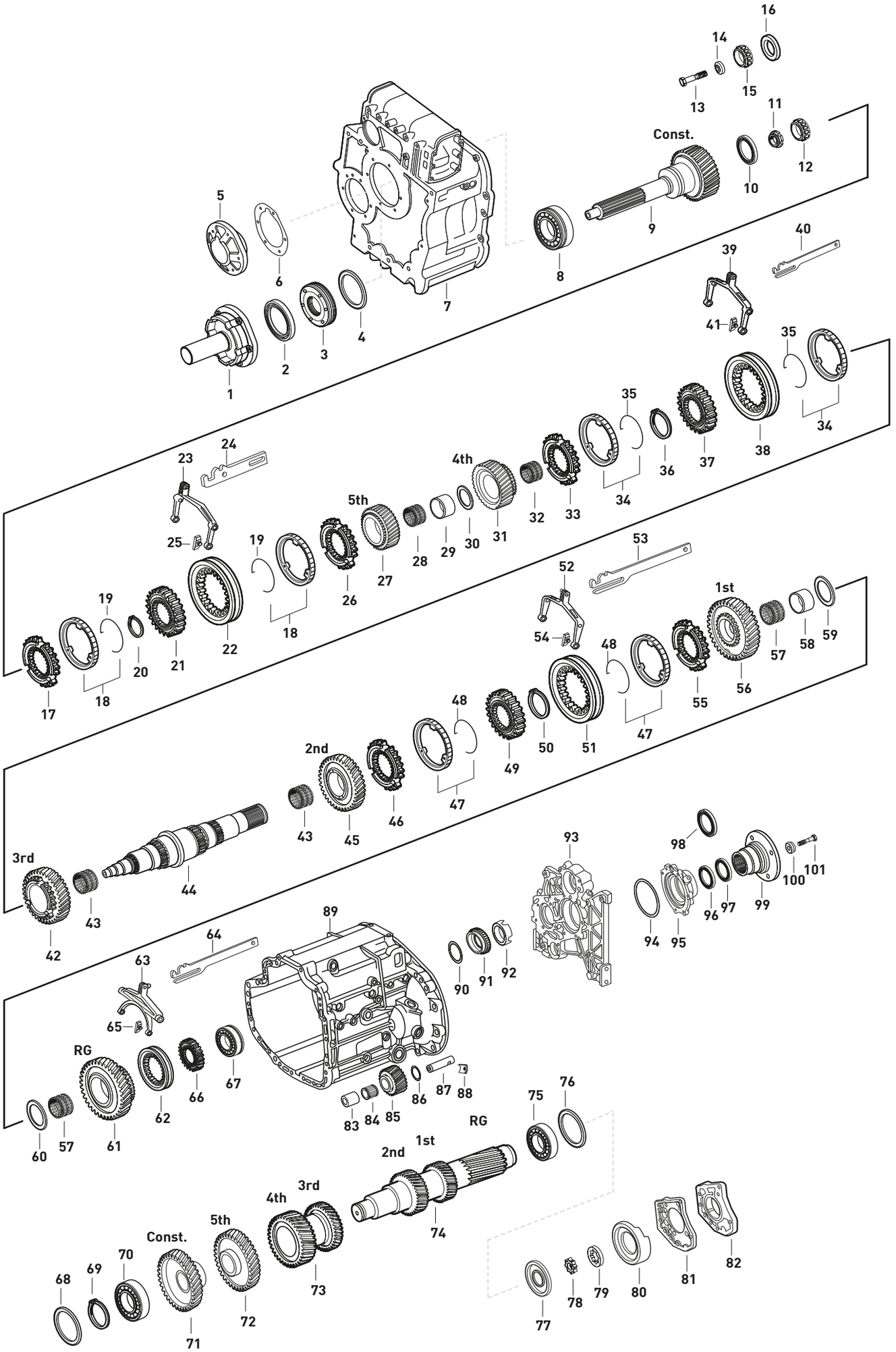






Original parts names, oem numbers, symbols and descriptions used in this catalogue are for reference purposes only.

| Fig. | Kacmaz No | Oem No | Oem Old No | Pcs. | Ürün Tanımı | Description | Sizes | Not | GO 4-160 |
|---|---|---|---|---|---|---|---|---|---|
| 67 | K21.03658 | 012 981 3705 | (015 981 4005) | 1 | KAMALI MİL ARKA BİLYA | ROLLER BEARING | 65X140X13,5mm | (1) | ♦ |
| | | | (018 981 6705) | | | | | | |
| 68 | K21.04289 | 389 263 1352 | | 1 | GRUP MİLİ ÖN BİLYA RAYNELİ | THRUST WASHER | 0,10mm | | ♦ |
| 68 | K21.04290 | 389 263 1452 | | 1 | GRUP MİLİ ÖN BİLYA RAYNELİ | THRUST WASHER | 0,15mm | | ♦ |
| 68 | K21.04291 | 389 263 1552 | | 1 | GRUP MİLİ ÖN BİLYA RAYNELİ | THRUST WASHER | 0,25mm | | ♦ |
| 68 | K21.04292 | 389 263 1652 | | 1 | GRUP MİLİ ÖN BİLYA RAYNELİ | THRUST WASHER | 0,30mm | | ♦ |
| 68 | K21.04293 | 389 263 1752 | | 1 | GRUP MİLİ ÖN BİLYA RAYNELİ | THRUST WASHER | 0,50mm | | ♦ |
| 69 | K21.07028 | 387 994 1641 | | 1 | GRUP MİLİ ÖN BİLYA SEKMANI | RETAINING RING | 2,25mm | | ♦ |
| 69 | K21.07029 | 387 994 1541 | | 1 | GRUP MİLİ ÖN BİLYA SEKMANI | RETAINING RING | 2,35mm | | ♦ |
| 69 | K21.06934 | 387 994 1441 | | 1 | GRUP MİLİ ÖN BİLYA SEKMANI | RETAINING RING | 2,40mm | | ♦ |
| 69 | K21.07030 | 387 994 1341 | | 1 | GRUP MİLİ ÖN BİLYA SEKMANI | RETAINING RING | 2,45mm | | ♦ |
| 69 | K21.06935 | 387 994 1241 | | 1 | GRUP MİLİ ÖN BİLYA SEKMANI | RETAINING RING | 2,50mm | | ♦ |
| 69 | K21.07031 | 387 994 1141 | | 1 | GRUP MİLİ ÖN BİLYA SEKMANI | RETAINING RING | 2,55mm | | ♦ |
| 69 | K21.06936 | 387 994 1041 | | 1 | GRUP MİLİ ÖN BİLYA SEKMANI | RETAINING RING | 2,60mm | | ♦ |
| 69 | K21.07032 | 387 994 0941 | | 1 | GRUP MİLİ ÖN BİLYA SEKMANI | RETAINING RING | 2,65mm | | ♦ |
| 69 | K21.06937 | 387 994 0841 | | 1 | GRUP MİLİ ÖN BİLYA SEKMANI | RETAINING RING | 2,70mm | | ♦ |
| 69 | K21.07033 | 387 994 0741 | | 1 | GRUP MİLİ ÖN BİLYA SEKMANI | RETAINING RING | 2,75mm | | ♦ |
| 69 | K21.06938 | 387 994 0641 | | 1 | GRUP MİLİ ÖN BİLYA SEKMANI | RETAINING RING | 2,80mm | | ♦ |
| 69 | K21.07034 | 387 994 0541 | | 1 | GRUP MİLİ ÖN BİLYA SEKMANI | RETAINING RING | 2,85mm | | ♦ |
| 69 | K21.06939 | 387 994 0441 | | 1 | GRUP MİLİ ÖN BİLYA SEKMANI | RETAINING RING | 2,90mm | | ♦ |
| 69 | K21.07035 | 387 994 0341 | | 1 | GRUP MİLİ ÖN BİLYA SEKMANI | RETAINING RING | 2,95mm | | ♦ |
| 69 | K21.06426 | 900055 060300 | (000 264 5351) | 1 | GRUP MİLİ ÖN BİLYA SEKMANI | RETAINING RING | 3,00mm | | ♦ |
| 70 | K21.03606 | 015 981 9005 | (014 981 1405) | 1 | GRUP MİLİ ÖN BİLYA | ROLLER BEARING | 50,8X100X35mm | | ♦ |
| | | | (012 981 7405) | | | | | | |
| | | | (012 981 5105) | | | | | | |
| 71 | K21.06288 | 389 263 1310 | (389 263 2310) | 1 | PRİZ.DİŞLİ KARŞILIĞI 51 DİŞ | CONSTANT GEAR 51 T. | | | ♦ |
| 72 | K21.06290 | 389 263 0115 | | 1 | 5.VİTES DİŞLİ KARŞILIĞI 47 DİŞ | GEAR 5th 47 T. | | | ♦ |
| 73 | K21.03265 | 389 263 2113 | (389 263 1613) | 1 | MAKARA DİŞLİ 33/38 DİŞ | DOUBLE GEAR 33/38 T. | | | ♦ |
| | | | (389 263 2513) | | | | | | |
| | | | (976 263 0213) | | | | | | |
| 74 | K21.06618 | 389 263 1102 | | 1 | GRUP MİLİ 12/19 DİŞ | COUNTER SHAFT 12/19 T. | | | ♦ |
| 75 | K21.03660 | 012 981 3605 | (015 981 4105) | 1 | GRUP MİLİ ARKA BİLYA | ROLLER BEARING | 45X110X12mm | | ♦ |
| 76 | K21.04192 | 406 337 0252 | | 1 | GRUP MİLİ ÖN BİLYA RAYNELİ | THRUST WASHER | 0,10mm | | ♦ |
| 76 | K21.04150 | 406 337 0352 | | 1 | GRUP MİLİ ÖN BİLYA RAYNELİ | THRUST WASHER | 0,20mm | | ♦ |
| 76 | K21.94150 | | | 1 | GRUP MİLİ ÖN BİLYA RAYNELİ | THRUST WASHER | 0,25mm | | ♦ |
| 76 | K21.04338 | 406 337 0452 | | 1 | GRUP MİLİ ÖN BİLYA RAYNELİ | THRUST WASHER | 0,30mm | | ♦ |
| 76 | K21.04196 | 389 263 5352 | (389 263 3252) | 1 | GRUP MİLİ ÖN BİLYA RAYNELİ | THRUST WASHER | 0,40mm | | ♦ |
| 76 | K21.04194 | 389 263 3352 | | 1 | GRUP MİLİ ÖN BİLYA RAYNELİ | THRUST WASHER | 0,45mm | | ♦ |
| 76 | K21.06719 | 389 263 5652 | | 1 | GRUP MİLİ ÖN BİLYA RAYNELİ | THRUST WASHER | 0,49mm | | ♦ |
| 76 | K21.04197 | 389 263 5852 | (389 263 3552) | 1 | GRUP MİLİ ÖN BİLYA RAYNELİ | THRUST WASHER | 0,55mm | | ♦ |
| 76 | K21.04340 | 389 263 6052 | | 1 | GRUP MİLİ ÖN BİLYA RAYNELİ | THRUST WASHER | 0,61mm | | ♦ |
| 76 | K21.04198 | 389 263 6352 | (389 263 3852) | 1 | GRUP MİLİ ÖN BİLYA RAYNELİ | THRUST WASHER | 0,70mm | | ♦ |
| 76 | K21.04154 | 389 263 3952 | | 1 | GRUP MİLİ ÖN BİLYA RAYNELİ | THRUST WASHER | 0,75mm | | ♦ |
| 76 | K21.04199 | 389 263 6852 | | 1 | GRUP MİLİ ÖN BİLYA RAYNELİ | THRUST WASHER | 0,85mm | | ♦ |
| 76 | K21.04200 | 389 263 7352 | | 1 | GRUP MİLİ ÖN BİLYA RAYNELİ | THRUST WASHER | 1,00mm | | ♦ |
| 76 | K21.04201 | 389 263 7852 | | 1 | GRUP MİLİ ÖN BİLYA RAYNELİ | THRUST WASHER | 1,15mm | | ♦ |
| 76 | K21.04202 | 389 263 8352 | | 1 | GRUP MİLİ ÖN BİLYA RAYNELİ | THRUST WASHER | 1,30mm | | ♦ |
| 77 | K21.03458 | 389 269 2001 | (389 269 1901) | 1 | YAĞ POMPA KAPAĞI | OIL PUMP COVER | | | ♦ |
| 78 | K21.03459 | 389 269 1606 | (389 269 1706) | 1 | YAĞ POMPA İÇ ROTOR | OIL PUMP GEAR | | | ♦ |
| 79 | K21.03414 | 389 269 0706 | (389 269 1206) | 1 | YAĞ POMPA DIŞ ROTOR | ROTOR | | | ♦ |
| 80 | K21.03460 | 389 269 2201 | (389 269 2101) | 1 | YAĞ POMPA GÖVDESİ | OIL PUMP HOUSING | | | ♦ |
| 81 | | 389 261 1580 | | 1 | YAĞ POMPA KAPAK CONTASI | GASKET | | | ♦ |
| 82 | K21.06143 | 656 261 0133 | (389 261 1233) | 1 | PTO KAPAĞI | COVER | | | ♦ |

NOTES :
Parts encoded alphabetic and numaric are used together.

NOTLAR :
Alfabetik ve rakam ile kodlanan parçalar birlikte kullanılır.





Original parts names, oem numbers, symbols and descriptions used in this catalogue are for reference purposes only.

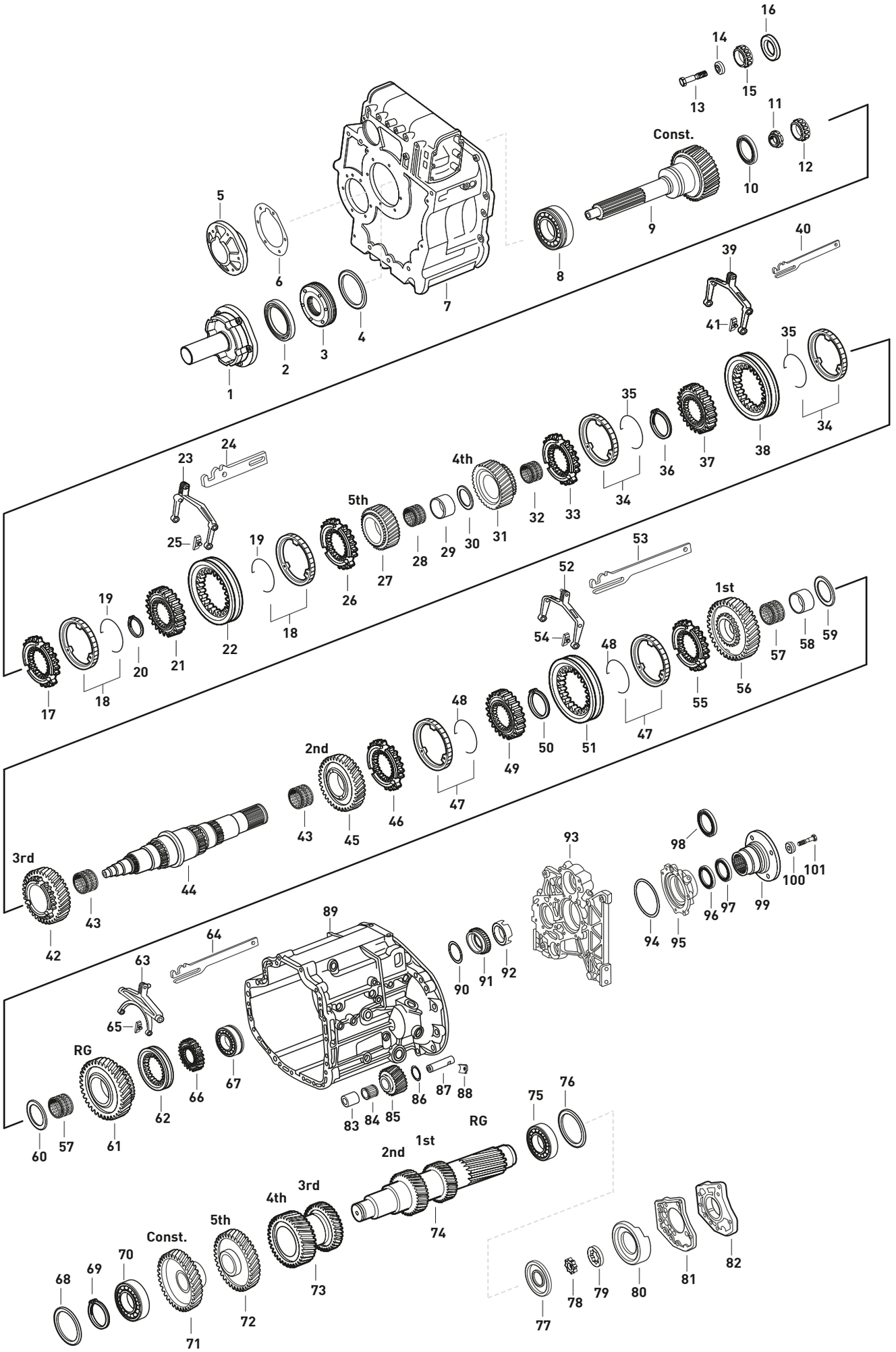






Original parts names, oem numbers, symbols and descriptions used in this catalogue are for reference purposes only.

| Fig. | Kacmaz No | Oem No | Oem Old No | Pcs. | Ürün Tanımı | Description | Sizes | Not | GO 4-160 |
|---|---|---|---|---|---|---|---|---|---|
| 83 | K21.06146 | 389 263 0650 | | 1 | K.GERİ VİTES MASURA BİLYA ÇANAĞI | BUSHING | 63,10mm | | ♦ |
| 84 | | 015 981 4110 | (019 981 0510) | 1 | KÜÇÜK GERİ VİTES MASURA BİLYA | NEEDLE BEARING | 48X60X31mm | | ♦ |
| 85 | | 389 263 0931 | | 1 | KÜÇÜK GERİ VİTES 21 DİŞ | REV.IDLER GEAR 21 T | | | ♦ |
| 86 | | 389 263 0162 | | 1 | KÜÇÜK GERİ VİTES DİŞLİ PULU | REV.IDLER GEAR BUSHING | | | ♦ |
| 87 | K21.06148 | 976 263 0330 | (389 263 0730) | 1 | KÜÇÜK GERİ VİTES PİMİ | PIN | | | ♦ |
| 88 | | 976 263 0041 | | 1 | KÜÇÜK GERİ VİTES PİM KİLİDİ | LOCK WASHER | | | ♦ |
| 89 | | 389 261 7603 | | 1 | ŞANZIMAN ORTA GÖVDE | HOUSING | | | ♦ |
| 90 | | 389 262 8354 | | 1 | ŞANZIMAN KM DEVİR PULU | THRUST WASHER | | | ♦ |
| 91 | | 387 264 0030 | | 1 | ŞANZIMAN KM DİŞLİSİ | SPEEDOMETER GEAR | | | ♦ |
| 92 | K21.04144 | 387 262 0928 | | 1 | ŞANZIMAN KM DEVİR SACI | PULSE STAR | | | ♦ |
| 92 | K21.04083 | 387 262 0828 | (387 262 0428) | 1 | ŞANZIMAN KM DEVİR SACI | PULSE STAR | | | ♦ |
| 93 | | 387 261 7420 | | 1 | ARKA KAPAK | REAR COVER | | | ♦ |
| 93 | | 387 261 6320 | | 1 | ARKA KAPAK | REAR COVER | | | ♦ |
| 94 | K21.06635 | 020 997 7848 | | 1 | ŞANZIMAN ARKA KEÇE KAPAK ORİNGİ | O-RING | 138X3mm | | ♦ |
| 94 | K21.06712 | 028 997 2248 | (019 997 7248) | 1 | ŞANZIMAN ARKA KEÇE KAPAK ORİNGİ | O-RING | 140X3mm | | ♦ |
| 95 | | 389 261 1520 | (389 261 1420) | 1 | ŞANZIMAN ARKA KEÇE KAPAĞI | COVER | | | ♦ |
| 96 | K21.03537 | 017 997 2547 | (007 997 3847) | 1 | ŞANZIMAN ARKA KEÇE | OIL SEAL | 80X100X10mm | | ♦ |
| | | | (007 997 9847) | | | | | | |
| | | | (008 997 0347) | | | | | | |
| 97 | K26.00104 | 017 997 7947 | (007 997 8446) | 1 | ŞANZIMAN ARKA KEÇE | OIL SEAL | 80X100X10mm | | ♦ |
| | | | (008 997 0047) | | | | | | |
| | | | (009 997 0746) | | | | | | |
| | | | (012 997 2347) | | | | | | |
| | | | (012 997 4447) | | | | | | |
| 98 | K21.03519 | 023 997 8847 | (020 997 6447) | 1 | ŞANZIMAN ARKA KEÇE | OIL SEAL | 80X100X15,5mm | | ♦ |
| | | | (023 997 8547) | | | | | | |
| 99 | K21.06063 | 976 262 0145 | (976 262 0045) | 1 | ŞANZIMAN FLANŞI | COMPANION FLANGE | 4-H, Ø150mm | | ♦ |
| 99 | | 387 262 1045 | | 1 | ŞANZIMAN FLANŞI | COMPANION FLANGE | 4-H, Ø150mm | | ♦ |
| 99 | | 947 262 0345 | | 1 | ŞANZIMAN FLANŞI | COMPANION FLANGE | 4-H, Ø150mm | | ♦ |
| 99 | K21.06589 | 629 262 0045 | | 1 | ŞANZIMAN FLANŞI | COMPANION FLANGE | 4-H, Ø150mm | | ♦ |
| 99 | | 387 264 2445 | | 1 | ŞANZIMAN FLANŞI | COMPANION FLANGE | 4-H, Ø162mm | | ♦ |
| 99 | | 387 264 3345 | | 1 | ŞANZIMAN FLANŞI | COMPANION FLANGE | Ø180mm | | ♦ |
| 99 | | 387 264 3245 | | 1 | ŞANZIMAN FLANŞI | COMPANION FLANGE | Ø182mm | | ♦ |
| 100 | | 389 411 0062 | | 1 | ŞANZ.FLANŞI ALIN PULU | THRUST WASHER | | (K) | ♦ |
| 100 | | 976 263 0362 | | 1 | ŞANZ.FLANŞI ALIN PULU | THRUST WASHER | | (L) | ♦ |
| 101 | K21.03422 | 389 990 0119 | | 1 | ŞANZ.FLANŞI ALIN VİDASI | SCREW | | (K) | ♦ |
| 101 | | 387 990 2219 | | 1 | ŞANZ.FLANŞI ALIN VİDASI | SCREW | | (L) | ♦ |

NOTES :
Parts encoded alphabetic and numaric are used together.

NOTLAR :
Alfabetik ve rakam ile kodlanan parçalar birlikte kullanılır.





Original parts names, oem numbers, symbols and descriptions used in this catalogue are for reference purposes only.

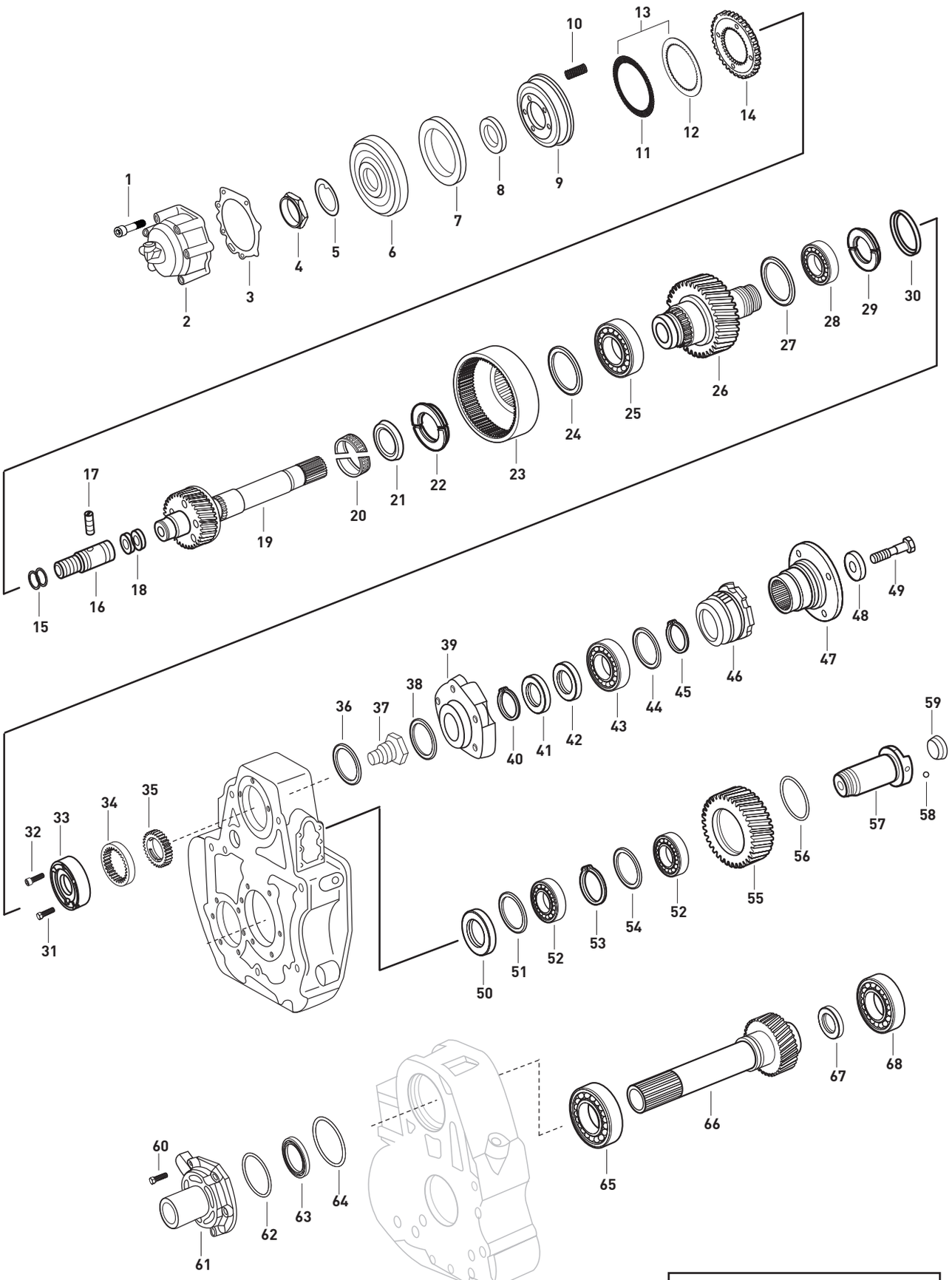


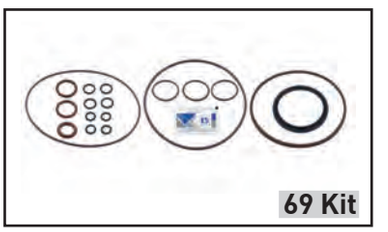




Original parts names, oem numbers, symbols and descriptions used in this catalogue are for reference purposes only.

| Fig. | Kacmaz No | Oem No | Oem Old No | Pcs. | Ürün Tanımı | Description | Sizes | Not | 1,09 | 1,48 | | |
|---|---|---|---|---|---|---|---|---|---|---|---|---|
| 1 | | 000912 008204 | (000912 008098) | 7 | PTO PİSTON KAPAK VİDASI | SCREW | | | ♦ | ♦ | | |
| 2 | | 389 264 0010 | | 1 | PTO PİSTON KAPAĞI | PISTON COVER | | | ♦ | ♦ | | |
| 3 | K21.06583 | 389 264 0180 | (389 264 0080) | 1 | PTO PİSTON KAPAK CONTASI | GASKET | | | ♦ | ♦ | | |
| 4 | K21.04360 | 945 264 0072 | (387 264 0072) | 1 | P.T.O. MİL SOMUNU | HEXAGON NUT | | | ♦ | ♦ | | |
| 5 | | 387 264 0262 | | 1 | KİLİTLEME PULU | THRUST WASHER | | | ♦ | ♦ | | |
| 6 | K21.06985 | 389 260 0663 | | 1 | KUMANDA SİLİNDİRİ | CYLINDER | | | ♦ | ♦ | | |
| 7 | K21.06581 | 015 997 2347 | | 1 | P.T.O. MİL KEÇESİ | SEAL | | | ♦ | ♦ | | |
| 8 | K21.06536 | 001 997 8341 | (003 997 9447) | 1 | P.T.O. MİL KEÇESİ | SEAL | 60X49X4,3/2,8mm | | ♦ | ♦ | | |
| 9 | K21.06539 | 389 264 0015 | | 1 | PİSTON | PISTON | | | ♦ | ♦ | | |
| 10 | K21.06179 | 385 993 3701 | | 5 | P.T.O. MİL YAYI | SPRING | | | ♦ | ♦ | | |
| 11 | K21.06252 | 389 264 0009 | | 8 | SARI FRENLEME | DISC OUTER | | | ♦ | ♦ | | |
| 12 | K21.06253 | 389 264 0008 | (389 264 0108) | 7 | ÇELİK FRENLEME | DISC INNER | | | ♦ | ♦ | | |
| 13 | K21.06255 | | | kit | FRENLEME TAKIMI | DISC KIT | | | ♦ | ♦ | | |
| 14 | K21.06342 | 389 264 0076 | | 1 | DİSK | DISC | | | ♦ | ♦ | | |
| 15 | K21.06965 | 008 997 8945 | | 2 | YAĞLAMA BORU ORİNGİ | O-RING | 18X3mm | | ♦ | ♦ | | |
| 16 | K21.06307 | 389 264 0285 | | 1 | YAĞLAMA BORUSU | OIL PIPE | | | ♦ | ♦ | | |
| 17 | | 000417 006001 | | 1 | YAĞLAMA BORU PİMİ | PIN | | | ♦ | ♦ | | |
| 18 | K21.04330 | 002 037 3519 | | 2 | PİSTON SEKMANI | RETAINING RING | | | ♦ | ♦ | | |
| 19 | K21.06528 | 389 264 0006 | | 1 | P.T.O. MİLİ | DRIVER SHAFT P.T.O. | | | ♦ | ♦ | | |
| 20 | | 011 981 4110 | (011 981 4010) | 1 | P.T.O. MİLİ MASURA BİLYA | NEEDLE BEARING | 45X55X20mm | | ♦ | ♦ | | |
| 21 | K21.04363 | 389 264 0073 | | 1 | PARÇALI KİLİT EMNİYET SACI | LOCK RING | | | ♦ | ♦ | | |
| 22 | K21.06543 | 389 264 0129 | | 1 | PARÇALI KİLİT | SPLIT RING | 3,97mm | | ♦ | ♦ | | |
| 22 | K21.06544 | 389 264 0729 | | 1 | PARÇALI KİLİT | SPLIT RING | 4,02mm | | ♦ | ♦ | | |
| 22 | K21.06545 | 389 264 0229 | | 1 | PARÇALI KİLİT | SPLIT RING | 4,07mm | | ♦ | ♦ | | |
| 22 | K21.06546 | 389 264 0829 | | 1 | PARÇALI KİLİT | SPLIT RING | 4,12mm | | ♦ | ♦ | | |
| 22 | K21.06547 | 389 264 0329 | | 1 | PARÇALI KİLİT | SPLIT RING | 4,17mm | | ♦ | ♦ | | |
| 22 | K21.06548 | 389 264 0929 | | 1 | PARÇALI KİLİT | SPLIT RING | 4,22mm | | ♦ | ♦ | | |
| 22 | K21.06558 | 389 264 0429 | | 1 | PARÇALI KİLİT | SPLIT RING | 4,27mm | | ♦ | ♦ | | |
| 23 | K21.06316 | 389 264 0007 | | 1 | P.T.O. ÇEMBER DİŞLİ | DISC SUPPORT | | | ♦ | ♦ | | |
| 24 | | 389 264 1252 | | 1 | P.T.O. DİŞLİSİ ARA RAYNELİ | THRUST WASHER | 0,05mm | | ♦ | ♦ | | |
| 24 | | 389 264 1352 | | 1 | P.T.O. DİŞLİSİ ARA RAYNELİ | THRUST WASHER | 0,10mm | | ♦ | ♦ | | |
| 24 | | 389 264 1452 | | 1 | P.T.O. DİŞLİSİ ARA RAYNELİ | THRUST WASHER | 0,15mm | | ♦ | ♦ | | |
| 24 | | 389 264 1552 | | 1 | P.T.O. DİŞLİSİ ARA RAYNELİ | THRUST WASHER | 0,25mm | | ♦ | ♦ | | |
| 24 | | 389 264 1652 | | 1 | P.T.O. DİŞLİSİ ARA RAYNELİ | THRUST WASHER | 0,30mm | | ♦ | ♦ | | |
| 24 | | 389 264 1752 | | 1 | P.T.O. DİŞLİSİ ARA RAYNELİ | THRUST WASHER | 0,50mm | | ♦ | ♦ | | |
| 25 | | 009 981 9405 | (009 981 8505) | 1 | P.T.O. DİŞLİ RULMANI | ROLLER BEARING | | | ♦ | ♦ | | |
| | | | (009 981 7105) | | | | | | | | | |
| 26 | K21.03708 | 389 264 0221 | | 1 | P.T.O. DİŞLİSİ | GEAR P.T.O. | | | ♦ | | | |
| 26 | K21.06681 | 389 264 0321 | | 1 | P.T.O. DİŞLİSİ | GEAR P.T.O. | | | | ♦ | | |
| 27 | | 389 264 0152 | | 1 | P.T.O. BİLYA RAYNELİ | THRUST WASHER | 0,10mm | | ♦ | ♦ | | |
| 27 | | 389 264 0252 | | 1 | P.T.O. BİLYA RAYNELİ | THRUST WASHER | 0,15mm | | ♦ | ♦ | | |
| 27 | | 389 264 0352 | | 1 | P.T.O. BİLYA RAYNELİ | THRUST WASHER | 0,20mm | | ♦ | ♦ | | |
| 27 | | 389 264 0452 | | 1 | P.T.O. BİLYA RAYNELİ | THRUST WASHER | 0,50mm | | ♦ | ♦ | | |
| 28 | | 009 981 6705 | (009 981 7205) | 1 | P.T.O. BİLYASI | ROLLER BEARING | | | ♦ | ♦ | | |
| 29 | K21.06559 | 387 262 2130 | | 1 | PARÇALI KİLİT | SPLIT RING | 3,60mm | | ♦ | ♦ | | |
| 29 | K21.06560 | 387 262 2230 | | 1 | PARÇALI KİLİT | SPLIT RING | 3,65mm | | ♦ | ♦ | | |
| 29 | K21.06561 | 387 262 3630 | | 1 | PARÇALI KİLİT | SPLIT RING | 3,70mm | | ♦ | ♦ | | |
| 29 | K21.06562 | 387 262 2330 | | 1 | PARÇALI KİLİT | SPLIT RING | 3,75mm | | ♦ | ♦ | | |
| 29 | K21.06549 | 387 262 3730 | | 1 | PARÇALI KİLİT | SPLIT RING | 3,80mm | | ♦ | ♦ | | |
| 29 | K21.06550 | 387 262 2430 | | 1 | PARÇALI KİLİT | SPLIT RING | 3,85mm | | ♦ | ♦ | | |
| 29 | K21.06551 | 387 262 3830 | | 1 | PARÇALI KİLİT | SPLIT RING | 3,90mm | | ♦ | ♦ | | |
| 29 | K21.06552 | 387 262 3930 | | 1 | PARÇALI KİLİT | SPLIT RING | 3,95mm | | ♦ | ♦ | | |
| 29 | K21.06553 | 387 262 2530 | | 1 | PARÇALI KİLİT | SPLIT RING | 4,00mm | | ♦ | ♦ | | |

NOTES :

NOTLAR :





Original parts names, oem numbers, symbols and descriptions used in this catalogue are for reference purposes only.

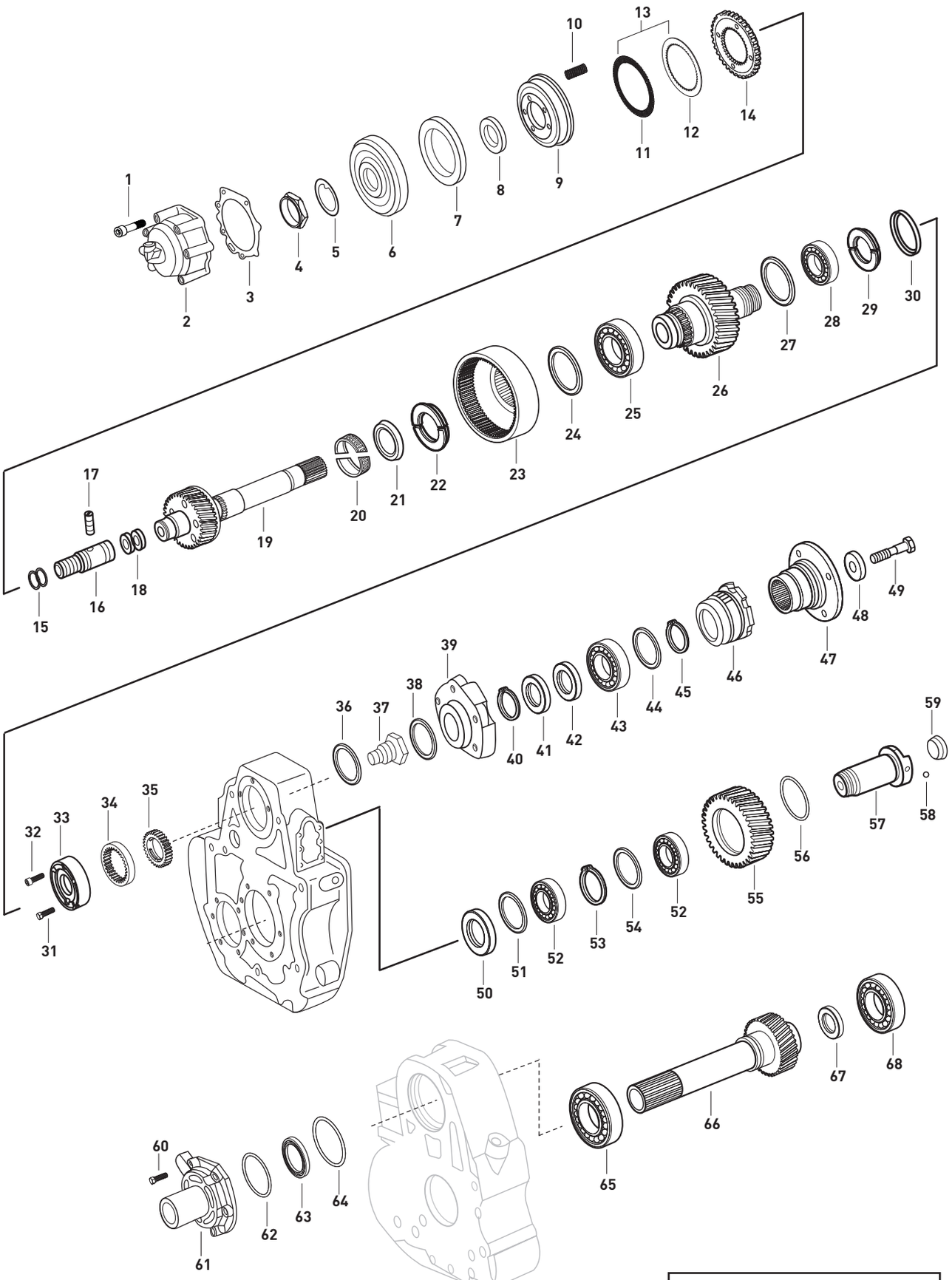


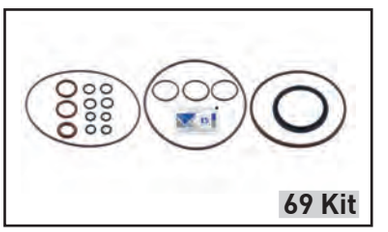




Original parts names, oem numbers, symbols and descriptions used in this catalogue are for reference purposes only.

| Fig. | Kacmaz No | Oem No | Oem Old No | Pcs. | Ürün Tanımı | Description | Sizes | Not | 1,09 | 1,48 | | |
|---|---|---|---|---|---|---|---|---|---|---|---|---|
| 29 | K21.06554 | 387 262 4030 | | 1 | PARÇALI KİLİT | SPLIT RING | 4,05mm | | ♦ | ♦ | | |
| 29 | K21.06555 | 387 262 4130 | | 1 | PARÇALI KİLİT | SPLIT RING | 4,10mm | | ♦ | ♦ | | |
| 29 | K21.06556 | 387 262 5230 | | 1 | PARÇALI KİLİT | SPLIT RING | 4,15mm | | ♦ | ♦ | | |
| 29 | K21.06557 | 387 262 2630 | | 1 | PARÇALI KİLİT | SPLIT RING | 4,20mm | | ♦ | ♦ | | |
| 29 | K21.06563 | 387 262 4230 | | 1 | PARÇALI KİLİT | SPLIT RING | 4,25mm | | ♦ | ♦ | | |
| 29 | K21.06564 | 387 262 0630 | | 1 | PARÇALI KİLİT | SPLIT RING | 4,30mm | | ♦ | ♦ | | |
| 29 | K21.06567 | 387 262 2730 | (387 262 2830) | 1 | PARÇALI KİLİT | SPLIT RING | 4,35mm | | ♦ | ♦ | | |
| 29 | K21.06568 | 387 262 2930 | (387 262 4330) | 1 | PARÇALI KİLİT | SPLIT RING | 4,50mm | | ♦ | ♦ | | |
| 29 | K21.06569 | 387 262 4430 | | 1 | PARÇALI KİLİT | SPLIT RING | 4,55mm | | ♦ | ♦ | | |
| 29 | K21.06570 | 387 262 4530 | (387 262 3030) | 1 | PARÇALI KİLİT | SPLIT RING | 4,65mm | | ♦ | ♦ | | |
| 29 | K21.06571 | 387 262 3230 | (387 262 3130) | 1 | PARÇALI KİLİT | SPLIT RING | 4,75mm | | ♦ | ♦ | | |
| 30 | K21.06541 | 387 262 0173 | | 1 | PARÇALI KİLİT EMNİYET SACI | LOCK RING | | | ♦ | ♦ | | |
| 31 | | 000931 005039 | | 1 | POMPA BAĞLANTI VİDASI | SCREW | M5X30mm | | ♦ | ♦ | | |
| 32 | | 914125 006512 | | 3 | POMPA BAĞLANTI VİDASI | SCREW | M6X40mm | | ♦ | ♦ | | |
| 33 | K21.06682 | 389 269 0104 | | 1 | YAĞ POMPA GÖVDESİ | OIL PUMP HOUSING | | | ♦ | | | |
| 33 | K21.06566 | 389 269 0004 | | 1 | YAĞ POMPA GÖVDESİ | OIL PUMP HOUSING | | | | ♦ | | |
| 34 | K21.06354 | 385 269 0906 | | 1 | DIŞ ROTOR | OUTER ROTOR | | | ♦ | | | |
| 34 | K21.06353 | 385 269 0306 | | 1 | DIŞ ROTOR | OUTER ROTOR | | | | ♦ | | |
| 35 | K21.06352 | 385 269 0706 | | 1 | İÇ ROTOR | INNER ROTOR | | | ♦ | | | |
| 35 | K21.06351 | 387 269 0006 | | 1 | İÇ ROTOR | INNER ROTOR | | | | ♦ | | |
| 36 | | 014 997 9348 | | 1 | ARA FLANŞ KEÇESİ | OIL SEAL | | | ♦ | ♦ | | |
| 37 | | 389 268 0039 | | 1 | KUMANDA TAPASI | PLUG | | | ♦ | ♦ | | |
| 38 | | 015 997 2248 | | 1 | ARA FLANŞ KEÇESİ | OIL SEAL | 82X3mm | | ♦ | ♦ | | |
| 38 | | 018 997 2448 | | 1 | ARA FLANŞ KEÇESİ | OIL SEAL | 94,5X2,5mm | | ♦ | ♦ | | |
| 39 | | 389 264 0044 | | 1 | ARA FLANŞ | INTERMEDIATE FLANGE | | | ♦ | ♦ | | |
| 39 | | 389 264 0944 | | 1 | ARA FLANŞ | INTERMEDIATE FLANGE | | | ♦ | ♦ | | |
| 40 | K21.04342 | 007 994 0041 | (387 262 2273) | 1 | ARA FLANŞ AYAR SEKMANI | RETAINING RING | 2,50mm | | ♦ | ♦ | | |
| 41 | K21.06992 | 011 997 3147 | | 1 | ARA FLANŞ KEÇESİ | OIL SEAL | 55X72X10mm | | ♦ | ♦ | | |
| 42 | K21.07012 | 387 264 0651 | | 1 | FLANŞ ARA PULU | WASHER | | | ♦ | ♦ | | |
| 43 | | 009 981 7305 | (009 981 1105) | 1 | P.T.O. FLANŞ BİLYASI | ROLLER BEARING | | | ♦ | ♦ | | |
| | | | (007 981 3705) | | | | | | | | | |
| 44 | | 673 263 0152 | (990 263 1200) | 1 | P.T.O. FLANŞ BİLYA AYAR RAYNELİ | THRUST WASHER | 0,05mm | | ♦ | ♦ | | |
| 44 | | 673 263 0252 | | 1 | P.T.O. FLANŞ BİLYA AYAR RAYNELİ | THRUST WASHER | 0,10mm | | ♦ | ♦ | | |
| 44 | | 673 263 0352 | | 1 | P.T.O. FLANŞ BİLYA AYAR RAYNELİ | THRUST WASHER | 0,15mm | | ♦ | ♦ | | |
| 44 | | 673 263 0452 | (990 263 5600) | 1 | P.T.O. FLANŞ BİLYA AYAR RAYNELİ | THRUST WASHER | 0,25mm | | ♦ | ♦ | | |
| 44 | | 673 263 0552 | | 1 | P.T.O. FLANŞ BİLYA AYAR RAYNELİ | THRUST WASHER | 0,30mm | | ♦ | ♦ | | |
| 44 | | 673 263 0752 | (990 263 1400) | 1 | P.T.O. FLANŞ BİLYA AYAR RAYNELİ | THRUST WASHER | 0,40mm | | ♦ | ♦ | | |
| 44 | | 673 263 0852 | | 1 | P.T.O. FLANŞ BİLYA AYAR RAYNELİ | THRUST WASHER | 0,45mm | | ♦ | ♦ | | |
| 44 | | 673 263 0652 | | 1 | P.T.O. FLANŞ BİLYA AYAR RAYNELİ | THRUST WASHER | 0,50mm | | ♦ | ♦ | | |
| 44 | | 673 263 0952 | | 1 | P.T.O. FLANŞ BİLYA AYAR RAYNELİ | THRUST WASHER | 0,55mm | | ♦ | ♦ | | |
| 44 | | 673 263 1052 | | 1 | P.T.O. FLANŞ BİLYA AYAR RAYNELİ | THRUST WASHER | 0,60mm | | ♦ | ♦ | | |
| 44 | | 673 263 1152 | | 1 | P.T.O. FLANŞ BİLYA AYAR RAYNELİ | THRUST WASHER | 0,65mm | | ♦ | ♦ | | |
| 44 | | 673 263 1252 | (990 263 1500) | 1 | P.T.O. FLANŞ BİLYA AYAR RAYNELİ | THRUST WASHER | 0,70mm | | ♦ | ♦ | | |
| 44 | | 673 263 1352 | | 1 | P.T.O. FLANŞ BİLYA AYAR RAYNELİ | THRUST WASHER | 0,75mm | | ♦ | ♦ | | |
| 45 | | 900055 072312 | | 1 | FLANŞ EMNİYET SEKMANI | LOCK RING | | | ♦ | ♦ | | |
| 46 | | 389 264 0072 | | 1 | FLANŞ SOMUNU | NUT | | | ♦ | ♦ | | |
| 47 | K21.06590 | 387 264 0545 | | 1 | P.T.O. FLANŞI | FLANGE | 120mm | | ♦ | ♦ | | |
| 48 | | 387 264 0276 | | 1 | FLANŞ VİDA ARA PULU | WASHER | | | ♦ | ♦ | | |
| 49 | | 360 990 1304 | | 1 | FLANŞ VİDASI | SCREW | | | ♦ | ♦ | | |
| 50 | | 010 997 7445 | | 1 | BORU DİŞLİ KARŞILIK LASTİĞİ | SEAL RING | 39,2X3mm | | ♦ | ♦ | | |
| 51 | | 389 264 0151 | | 1 | BORU DİŞLİ KARŞILIĞI AYAR PULU | WASHER | | | ♦ | ♦ | | |
| 52 | K21.03606 | 015 981 9005 | (014 981 1405) | 2 | BORU DİŞLİ KARŞILIĞI BİLYASI | ROLLER BEARING | 50,8X100X35mm | | ♦ | ♦ | | |
| | | | (012 981 7405) | | | | | | | | | |

NOTES :

NOTLAR :





Original parts names, oem numbers, symbols and descriptions used in this catalogue are for reference purposes only.

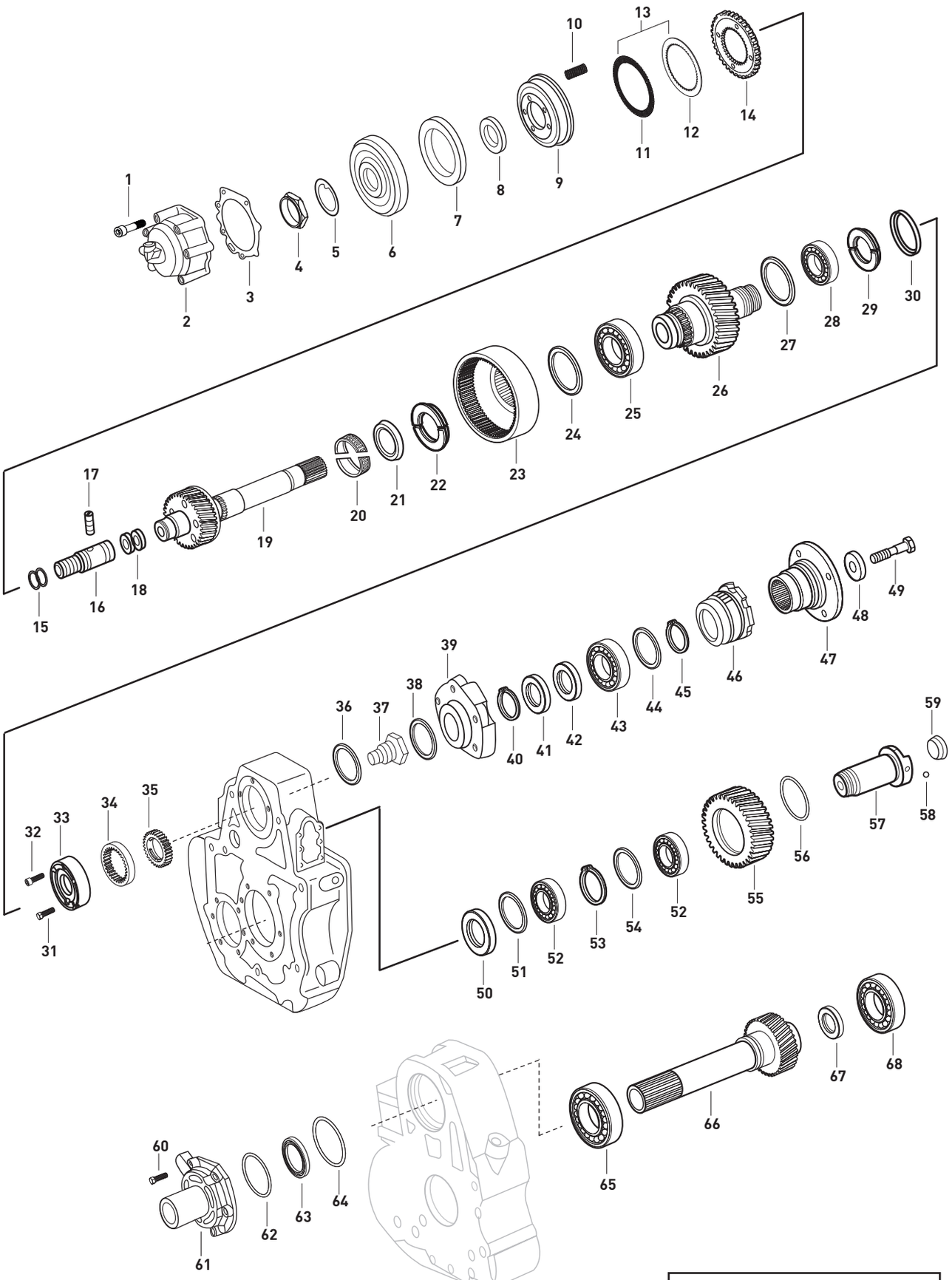


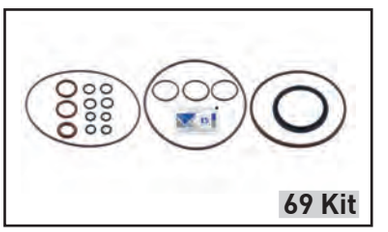




Original parts names, oem numbers, symbols and descriptions used in this catalogue are for reference purposes only.

| Fig. | Kacmaz No | Oem No | Oem Old No | Pcs. | Ürün Tanımı | Description | Sizes | Not | 1,09 | 1,48 | | |
|---|---|---|---|---|---|---|---|---|---|---|---|---|
| 53 | | 900055 100311 | | 1 | BORU DİŞLİ KARŞ.AYAR SEKMANI | RETAINING RING | | | ♦ | ♦ | | |
| 54 | | 389 264 0051 | | 1 | BORU DİŞLİ KARŞ.AYAR PULU | WASHER | | | ♦ | ♦ | | |
| 55 | K21.03707 | 389 264 0121 | | 1 | BORU DİŞLİ KARŞILIĞI | GEAR | | | ♦ | ♦ | | |
| 56 | | 389 264 0652 | | 1 | BİLYA AYAR RAYNELİ | THRUST WASHER | 0,10mm | | ♦ | ♦ | | |
| 56 | | 389 264 0752 | | 1 | BİLYA AYAR RAYNELİ | THRUST WASHER | 0,15mm | | ♦ | ♦ | | |
| 56 | | 389 264 0852 | | 1 | BİLYA AYAR RAYNELİ | THRUST WASHER | 0,30mm | | ♦ | ♦ | | |
| 56 | | 389 264 0952 | | 1 | BİLYA AYAR RAYNELİ | THRUST WASHER | 0,50mm | | ♦ | ♦ | | |
| 56 | | 389 264 1052 | | 1 | BİLYA AYAR RAYNELİ | THRUST WASHER | 0,80mm | | ♦ | ♦ | | |
| 57 | K21.03669 | 389 264 0118 | | 1 | BORU DİŞLİ KARŞILIK MİLİ | PIN | | | ♦ | ♦ | | |
| 58 | | 005401 308000 | | 1 | BORU DİŞLİ KARŞILIK MİL BİLYASI | BALL | D.8 | | ♦ | ♦ | | |
| 59 | | 915046 012100 | | 1 | BORU DİŞLİ KARŞILIK MİL TAPASI | PLUG | | | ♦ | ♦ | | |
| 60 | | 304017 008042 | (000933 008119) | 6 | KAVRAMA FLANŞ VİDASI | SCREW | | | ♦ | ♦ | | |
| 61 | | 389 264 0045 | | 1 | KAPAK | COVER | | | ♦ | ♦ | | |
| 62 | | 385 264 1852 | | 1 | KAVRAMA FLANŞI AYAR RAYNELİ | THRUST WASHER | 0,10mm | | ♦ | ♦ | | |
| 62 | | 385 264 1752 | | 1 | KAVRAMA FLANŞI AYAR RAYNELİ | THRUST WASHER | 0,15mm | | ♦ | ♦ | | |
| 62 | | 385 264 1952 | | 1 | KAVRAMA FLANŞI AYAR RAYNELİ | THRUST WASHER | 0,30mm | | ♦ | ♦ | | |
| 63 | | 003 997 9347 | | 1 | KAVRAMA FLANŞ KEÇESİ | OIL SEAL | | | ♦ | ♦ | | |
| 64 | | 010 997 9548 | | 1 | KAVRAMA FLANŞ ORİNGİ | O-RING | 155X4mm | | ♦ | ♦ | | |
| 65 | K26.00246 | 009 981 7405 | (005 981 1505) | 1 | BORU DİŞLİ ÖN BİLYA | ROLLER BEARING | 85X130X29mm | | ♦ | ♦ | | |
| | | | (005 981 1405) | | | | | | | | | |
| 66 | | 389 264 0106 | | 1 | BORU DİŞLİ | DRIVE SHAFT | | | ♦ | | | |
| 66 | | 389 264 0206 | | 1 | BORU DİŞLİ | DRIVE SHAFT | | | | ♦ | | |
| 67 | K21.03521 | 015 997 1647 | (015 997 0647) | 2 | BORU DİŞLİ KEÇESİ | OIL SEAL | 52X68X8mm | | ♦ | ♦ | | |
| | | | (024 997 2147) | | | | | | | | | |
| 68 | | 009 981 6605 | (004 981 1705) | 1 | BORU DİŞLİ ARKA BİLYA | ROLLER BEARING | | | ♦ | ♦ | | |
| 69 | K21.04315 | | | Kit | ORİNG TAKIMI | O-RING KIT | | | ♦ | ♦ | | |

NOTES :

NOTLAR :





Original parts names, oem numbers, symbols and descriptions used in this catalogue are for reference purposes only.

# POWER TAKE OFF (OLD) (G 210 - G 240)

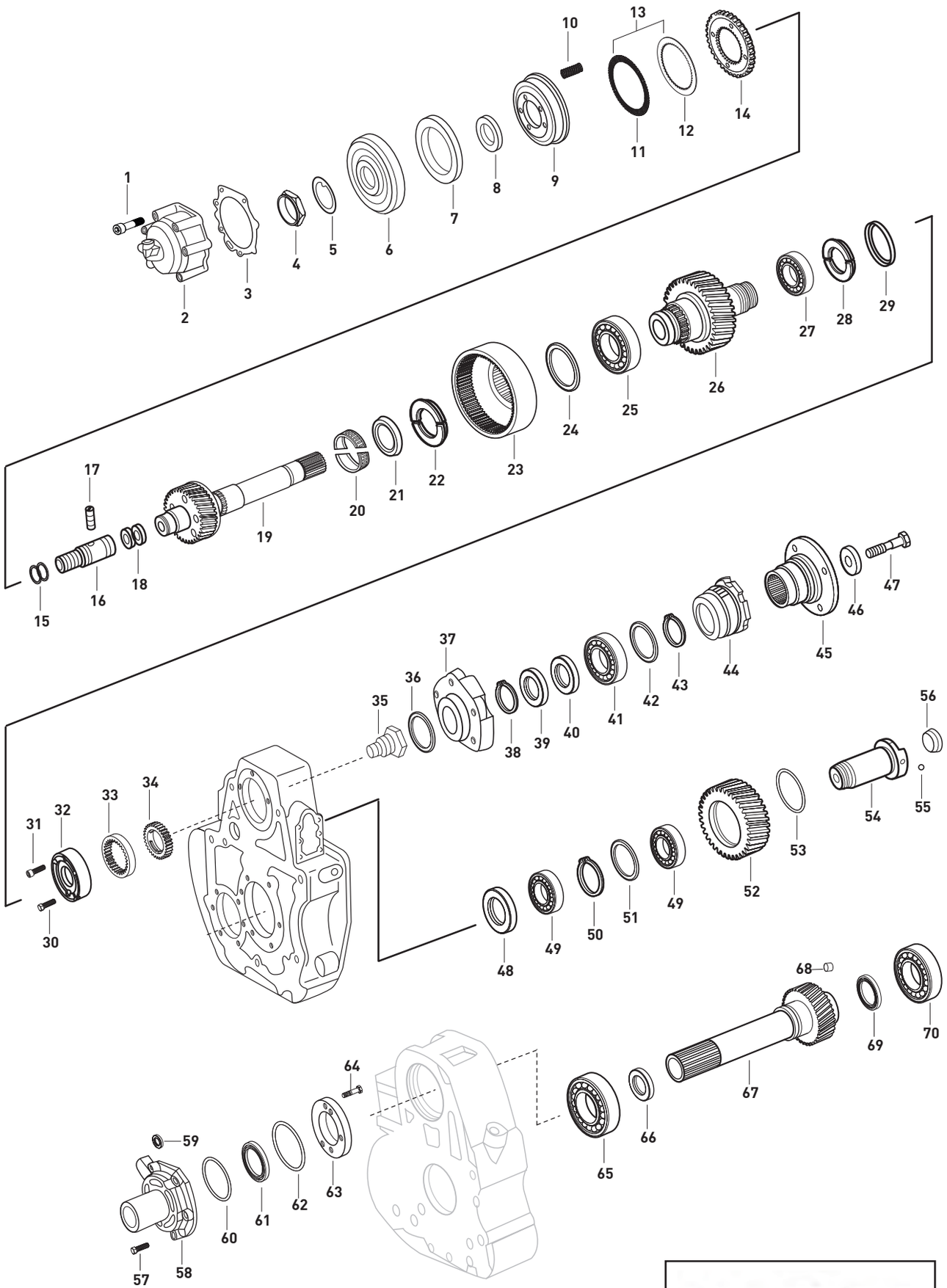


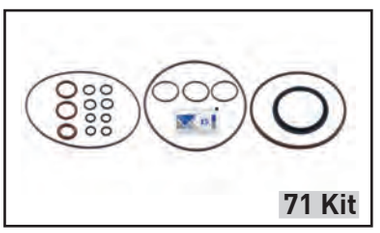




Original parts names, oem numbers, symbols and descriptions used in this catalogue are for reference purposes only.

| Fig. | Kacmaz No | Oem No | Oem Old No | Pcs. | Ürün Tanımı | Description | Sizes | Not | 1,09 | 1,48 | | |
|---|---|---|---|---|---|---|---|---|---|---|---|---|
| 1 | | 000912 008204 | (000912 008098) | 7 | PTO PİSTON KAPAK VİDASI | SCREW | | | ♦ | ♦ | | |
| 2 | | 389 264 0010 | | 1 | PTO PİSTON KAPAĞI | PISTON COVER | | | ♦ | ♦ | | |
| 3 | K21.06583 | 389 264 0180 | (389 264 0080) | 1 | PTO PİSTON KAPAK CONTASI | GASKET | | | ♦ | ♦ | | |
| 4 | K21.04360 | 945 264 0072 | (387 264 0072) | 1 | P.T.O. MİL SOMUNU | HEXAGON NUT | | | ♦ | ♦ | | |
| 5 | | 387 264 0262 | | 1 | KİLİTLEME PULU | THRUST WASHER | | | ♦ | ♦ | | |
| 6 | K21.06985 | 389 260 0663 | | 1 | KUMANDA SİLİNDİRİ | CYLINDER | | | ♦ | ♦ | | |
| 7 | K21.06581 | 015 997 2347 | | 1 | P.T.O. MİL KEÇESİ | SEAL | | | ♦ | ♦ | | |
| 8 | K21.06536 | 001 997 8341 | (003 997 9447) | 1 | P.T.O. MİL KEÇESİ | SEAL | 60X49X4,3/2,8mm | | ♦ | ♦ | | |
| 9 | K21.06539 | 389 264 0015 | | 1 | PİSTON | PISTON | | | ♦ | ♦ | | |
| 10 | K21.06179 | 385 993 3701 | | 5 | P.T.O. MİL YAYI | SPRING | | | ♦ | ♦ | | |
| 11 | K21.06252 | 389 264 0009 | | 8 | SARI FRENLEME | DISC OUTER | | | ♦ | ♦ | | |
| 12 | K21.06253 | 389 264 0008 | (389 264 0108) | 7 | ÇELİK FRENLEME | DISC INNER | | | ♦ | ♦ | | |
| 13 | K21.06255 | | | kit | FRENLEME TAKIMI | DISC KIT | | | ♦ | ♦ | | |
| 14 | K21.06342 | 389 264 0076 | | 1 | DİSK | DISC | | | ♦ | ♦ | | |
| 15 | K21.06965 | 008 997 8945 | | 2 | YAĞLAMA BORU ORİNGİ | O-RING | 18X3mm | | ♦ | ♦ | | |
| 16 | K21.06307 | 389 264 0285 | | 1 | YAĞLAMA BORUSU | OIL PIPE | | | ♦ | ♦ | | |
| 17 | | 000417 006001 | | 1 | YAĞLAMA BORU PİMİ | PIN | | | ♦ | ♦ | | |
| 18 | K21.04330 | 002 037 3519 | | 2 | PİSTON SEKMANI | RETAINING RING | | | ♦ | ♦ | | |
| 19 | K21.06528 | 389 264 0006 | | 1 | P.T.O. MİLİ | DRIVER SHAFT P.T.O. | | | ♦ | ♦ | | |
| 20 | | 011 981 4110 | (011 981 4010) | 1 | P.T.O. MİLİ MASURA BİLYA | NEEDLE BEARING | 45X55X20mm | | ♦ | ♦ | | |
| 21 | K21.04363 | 389 264 0073 | | 1 | PARÇALI KİLİT EMNİYET SACI | LOCK RING | | | ♦ | ♦ | | |
| 22 | K21.06543 | 389 264 0129 | | 1 | PARÇALI KİLİT | SPLIT RING | 3,97mm | | ♦ | ♦ | | |
| 22 | K21.06544 | 389 264 0729 | | 1 | PARÇALI KİLİT | SPLIT RING | 4,02mm | | ♦ | ♦ | | |
| 22 | K21.06545 | 389 264 0229 | | 1 | PARÇALI KİLİT | SPLIT RING | 4,07mm | | ♦ | ♦ | | |
| 22 | K21.06546 | 389 264 0829 | | 1 | PARÇALI KİLİT | SPLIT RING | 4,12mm | | ♦ | ♦ | | |
| 22 | K21.06547 | 389 264 0329 | | 1 | PARÇALI KİLİT | SPLIT RING | 4,17mm | | ♦ | ♦ | | |
| 22 | K21.06548 | 389 264 0929 | | 1 | PARÇALI KİLİT | SPLIT RING | 4,22mm | | ♦ | ♦ | | |
| 22 | K21.06558 | 389 264 0429 | | 1 | PARÇALI KİLİT | SPLIT RING | 4,27mm | | ♦ | ♦ | | |
| 23 | K21.06316 | 389 264 0007 | | 1 | P.T.O. ÇEMBER DİŞLİ | DISC SUPPORT | | | ♦ | ♦ | | |
| 24 | | 389 264 1252 | | 1 | P.T.O. DİŞLİSİ ARA RAYNELİ | THRUST WASHER | 0,05mm | | ♦ | ♦ | | |
| 24 | | 389 264 1352 | | 1 | P.T.O. DİŞLİSİ ARA RAYNELİ | THRUST WASHER | 0,10mm | | ♦ | ♦ | | |
| 24 | | 389 264 1452 | | 1 | P.T.O. DİŞLİSİ ARA RAYNELİ | THRUST WASHER | 0,15mm | | ♦ | ♦ | | |
| 24 | | 389 264 1552 | | 1 | P.T.O. DİŞLİSİ ARA RAYNELİ | THRUST WASHER | 0,25mm | | ♦ | ♦ | | |
| 24 | | 389 264 1652 | | 1 | P.T.O. DİŞLİSİ ARA RAYNELİ | THRUST WASHER | 0,30mm | | ♦ | ♦ | | |
| 24 | | 389 264 1752 | | 1 | P.T.O. DİŞLİSİ ARA RAYNELİ | THRUST WASHER | 0,50mm | | ♦ | ♦ | | |
| 25 | | 009 981 9405 | (009 981 8505) | 1 | P.T.O. DİŞLİ RULMANI | ROLLER BEARING | | | ♦ | ♦ | | |
| | | | (009 981 7105) | | | | | | | | | |
| 26 | K21.03708 | 389 264 0221 | | 1 | P.T.O. DİŞLİSİ | GEAR P.T.O. | | | ♦ | | | |
| 26 | K21.06681 | 389 264 0321 | | 1 | P.T.O. DİŞLİSİ | GEAR P.T.O. | | | | ♦ | | |
| 27 | | 009 981 6705 | (009 981 7205) | 1 | P.T.O. BİLYASI | ROLLER BEARING | | | ♦ | ♦ | | |
| 28 | K21.06559 | 387 262 2130 | | 1 | PARÇALI KİLİT | SPLIT RING | 3,60mm | | ♦ | ♦ | | |
| 28 | K21.06560 | 387 262 2230 | | 1 | PARÇALI KİLİT | SPLIT RING | 3,65mm | | ♦ | ♦ | | |
| 28 | K21.06561 | 387 262 3630 | | 1 | PARÇALI KİLİT | SPLIT RING | 3,70mm | | ♦ | ♦ | | |
| 28 | K21.06562 | 387 262 2330 | | 1 | PARÇALI KİLİT | SPLIT RING | 3,75mm | | ♦ | ♦ | | |
| 28 | K21.06549 | 387 262 3730 | | 1 | PARÇALI KİLİT | SPLIT RING | 3,80mm | | ♦ | ♦ | | |
| 28 | K21.06550 | 387 262 2430 | | 1 | PARÇALI KİLİT | SPLIT RING | 3,85mm | | ♦ | ♦ | | |
| 28 | K21.06551 | 387 262 3830 | | 1 | PARÇALI KİLİT | SPLIT RING | 3,90mm | | ♦ | ♦ | | |
| 28 | K21.06552 | 387 262 3930 | | 1 | PARÇALI KİLİT | SPLIT RING | 3,95mm | | ♦ | ♦ | | |
| 28 | K21.06553 | 387 262 2530 | | 1 | PARÇALI KİLİT | SPLIT RING | 4,00mm | | ♦ | ♦ | | |
| 28 | K21.06554 | 387 262 4030 | | 1 | PARÇALI KİLİT | SPLIT RING | 4,05mm | | ♦ | ♦ | | |
| 28 | K21.06555 | 387 262 4130 | | 1 | PARÇALI KİLİT | SPLIT RING | 4,10mm | | ♦ | ♦ | | |
| 28 | K21.06556 | 387 262 5230 | | 1 | PARÇALI KİLİT | SPLIT RING | 4,15mm | | ♦ | ♦ | | |
| 28 | K21.06557 | 387 262 2630 | | 1 | PARÇALI KİLİT | SPLIT RING | 4,20mm | | ♦ | ♦ | | |

NOTES :

NOTLAR :





Original parts names, oem numbers, symbols and descriptions used in this catalogue are for reference purposes only.

# POWER TAKE OFF (OLD) (G 210 - G 240)

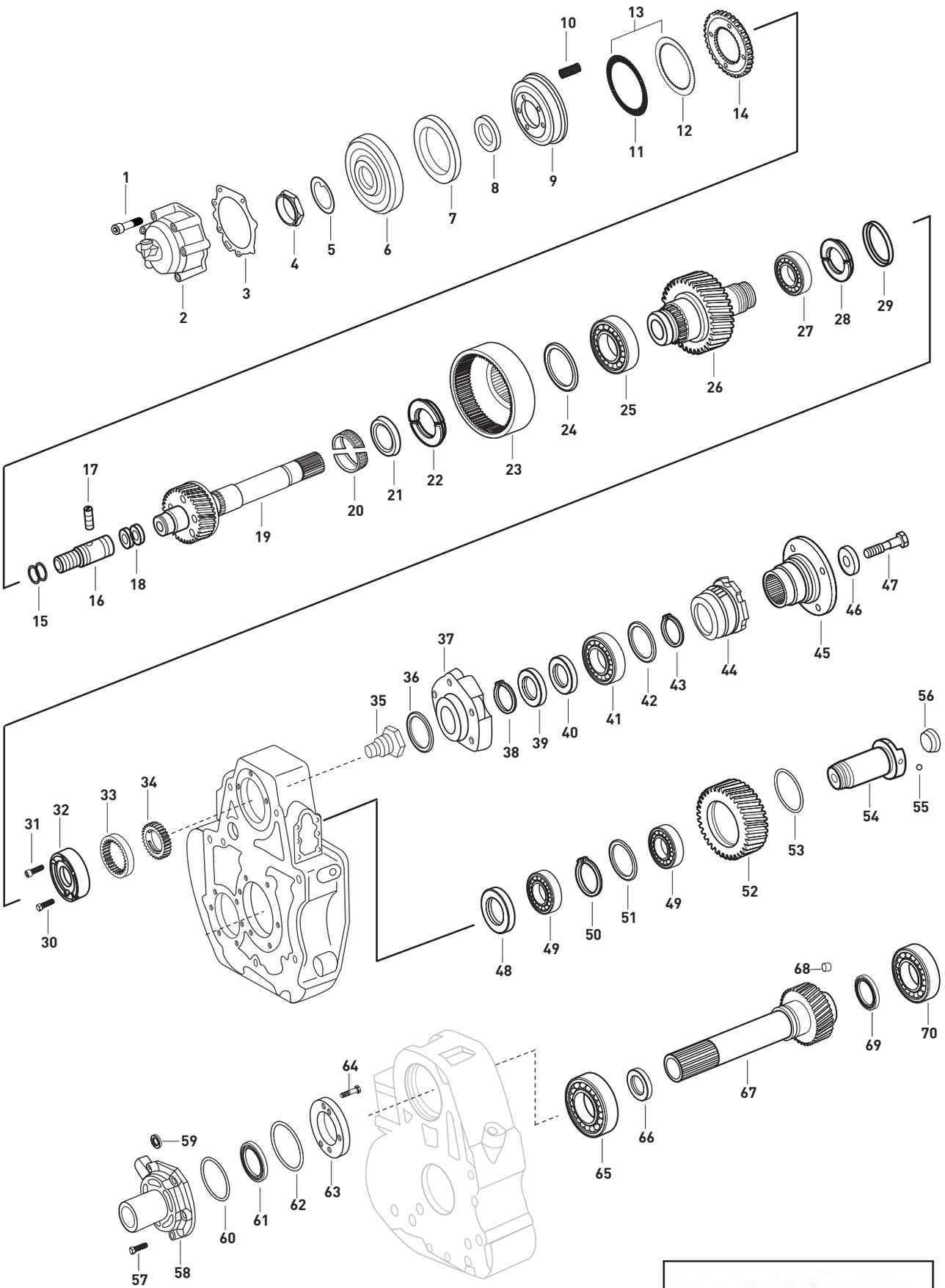


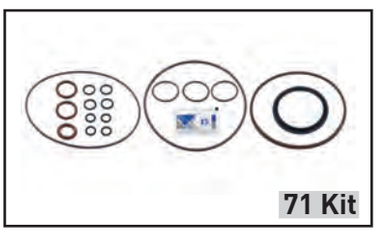




Original parts names, oem numbers, symbols and descriptions used in this catalogue are for reference purposes only.

| Fig. | Kacmaz No | Oem No | Oem Old No | Pcs. | Ürün Tanımı | Description | Sizes | Not | 1,09 | 1,48 | | |
|---|---|---|---|---|---|---|---|---|---|---|---|---|
| 28 | K21.06563 | 387 262 4230 | | 1 | PARÇALI KİLİT | SPLIT RING | 4,25mm | | ♦ | ♦ | | |
| 28 | K21.06564 | 387 262 0630 | | 1 | PARÇALI KİLİT | SPLIT RING | 4,30mm | | ♦ | ♦ | | |
| 28 | K21.06567 | 387 262 2730 | (387 262 2830) | 1 | PARÇALI KİLİT | SPLIT RING | 4,35mm | | ♦ | ♦ | | |
| 28 | K21.06568 | 387 262 2930 | (387 262 4330) | 1 | PARÇALI KİLİT | SPLIT RING | 4,50mm | | ♦ | ♦ | | |
| 28 | K21.06569 | 387 262 4430 | | 1 | PARÇALI KİLİT | SPLIT RING | 4,55mm | | ♦ | ♦ | | |
| 28 | K21.06570 | 387 262 4530 | (387 262 3030) | 1 | PARÇALI KİLİT | SPLIT RING | 4,65mm | | ♦ | ♦ | | |
| 28 | K21.06571 | 387 262 3230 | (387 262 3130) | 1 | PARÇALI KİLİT | SPLIT RING | 4,75mm | | ♦ | ♦ | | |
| 29 | K21.06541 | 387 262 0173 | | 1 | PARÇALI KİLİT EMNİYET SACI | LOCK RING | | | ♦ | ♦ | | |
| 30 | | 000931 005039 | | 1 | POMPA BAĞLANTI VİDASI | SCREW | M5X30mm | | ♦ | ♦ | | |
| 31 | | 914125 006512 | | 3 | POMPA BAĞLANTI VİDASI | SCREW | M6X40mm | | ♦ | ♦ | | |
| 32 | K21.06682 | 389 269 0104 | | 1 | YAĞ POMPA GÖVDESİ | OIL PUMP HOUSING | | | ♦ | | | |
| 32 | K21.06566 | 389 269 0004 | | 1 | YAĞ POMPA GÖVDESİ | OIL PUMP HOUSING | | | | ♦ | | |
| 33 | K21.06354 | 385 269 0906 | | 1 | DIŞ ROTOR | OUTER ROTOR | | | ♦ | | | |
| 33 | K21.06353 | 385 269 0306 | | 1 | DIŞ ROTOR | OUTER ROTOR | | | | ♦ | | |
| 34 | K21.06352 | 385 269 0706 | | 1 | İÇ ROTOR | INNER ROTOR | | | ♦ | | | |
| 34 | K21.06351 | 387 269 0006 | | 1 | İÇ ROTOR | INNER ROTOR | | | | ♦ | | |
| 35 | | 389 268 0039 | | 1 | KUMANDA TAPASI | PLUG | | | ♦ | ♦ | | |
| 36 | | 018 997 2448 | | 1 | ARA FLANŞ KEÇESİ | SEAL | 94,5X2,5mm | | ♦ | ♦ | | |
| 37 | | 389 264 0944 | | 1 | ARA FLANŞ | INTERMEDIATE FLANGE | | | ♦ | ♦ | | |
| 38 | K21.04342 | 007 994 0041 | (387 262 2273) | 1 | ARA FLANŞ AYAR SEKMANI | RETAINING RING | 2,50mm | | ♦ | ♦ | | |
| 39 | K21.06992 | 011 997 3147 | | 1 | ARA FLANŞ KEÇESİ | OIL SEAL | 55x72x10mm | | ♦ | ♦ | | |
| 40 | K21.07012 | 387 264 0651 | | 1 | FLANŞ ARA PULU | WASHER | | | ♦ | ♦ | | |
| 41 | | 009 981 7305 | (009 981 1105) | 1 | P.T.O. FLANŞ BİLYASI | ROLLER BEARING | | | ♦ | ♦ | | |
| | | | (007 981 3705) | | | | | | | | | |
| 42 | | 673 263 0152 | (990 263 1200) | 1 | P.T.O. FLANŞ BİLYA AYAR RAYNELİ | THRUST WASHER | 0,05mm | | ♦ | ♦ | | |
| 42 | | 673 263 0252 | | 1 | P.T.O. FLANŞ BİLYA AYAR RAYNELİ | THRUST WASHER | 0,10mm | | ♦ | ♦ | | |
| 42 | | 673 263 0352 | | 1 | P.T.O. FLANŞ BİLYA AYAR RAYNELİ | THRUST WASHER | 0,15mm | | ♦ | ♦ | | |
| 42 | | 673 263 0452 | (990 263 5600) | 1 | P.T.O. FLANŞ BİLYA AYAR RAYNELİ | THRUST WASHER | 0,25mm | | ♦ | ♦ | | |
| 42 | | 673 263 0552 | | 1 | P.T.O. FLANŞ BİLYA AYAR RAYNELİ | THRUST WASHER | 0,30mm | | ♦ | ♦ | | |
| 42 | | 673 263 0752 | (990 263 1400) | 1 | P.T.O. FLANŞ BİLYA AYAR RAYNELİ | THRUST WASHER | 0,40mm | | ♦ | ♦ | | |
| 42 | | 673 263 0852 | | 1 | P.T.O. FLANŞ BİLYA AYAR RAYNELİ | THRUST WASHER | 0,45mm | | ♦ | ♦ | | |
| 42 | | 673 263 0652 | | 1 | P.T.O. FLANŞ BİLYA AYAR RAYNELİ | THRUST WASHER | 0,50mm | | ♦ | ♦ | | |
| 42 | | 673 263 0952 | | 1 | P.T.O. FLANŞ BİLYA AYAR RAYNELİ | THRUST WASHER | 0,55mm | | ♦ | ♦ | | |
| 42 | | 673 263 1052 | | 1 | P.T.O. FLANŞ BİLYA AYAR RAYNELİ | THRUST WASHER | 0,60mm | | ♦ | ♦ | | |
| 42 | | 673 263 1152 | | 1 | P.T.O. FLANŞ BİLYA AYAR RAYNELİ | THRUST WASHER | 0,65mm | | ♦ | ♦ | | |
| 42 | | 673 263 1252 | (990 263 1500) | 1 | P.T.O. FLANŞ BİLYA AYAR RAYNELİ | THRUST WASHER | 0,70mm | | ♦ | ♦ | | |
| 42 | | 673 263 1352 | | 1 | P.T.O. FLANŞ BİLYA AYAR RAYNELİ | THRUST WASHER | 0,75mm | | ♦ | ♦ | | |
| 43 | | 900055 072312 | | 1 | FLANŞ EMNİYET SEKMANI | LOCK RING | | | ♦ | ♦ | | |
| 44 | | 389 264 0072 | | 1 | FLANŞ SOMUNU | NUT | | | ♦ | ♦ | | |
| 45 | K21.06590 | 387 264 0545 | | 1 | P.T.O. FLANŞI | FLANGE | 120mm | | ♦ | ♦ | | |
| 46 | | 387 264 0276 | | 1 | FLANŞ VİDA ARA PULU | WASHER | | | ♦ | ♦ | | |
| 47 | | 360 990 1304 | | 1 | FLANŞ VİDASI | SCREW | | | ♦ | ♦ | | |
| 48 | | 010 997 7445 | | 1 | BORU DİŞLİ KARŞILIK LASTİĞİ | SEAL RING | 39,2X3mm | | ♦ | ♦ | | |
| 49 | K21.03606 | 015 981 9005 | (014 981 1405) | 2 | BORU DİŞLİ KARŞILIĞI BİLYASI | ROLLER BEARING | 50,8X100X35mm | | ♦ | ♦ | | |
| | | | (012 981 7405) | | | | | | | | | |
| | | | (012 981 5105) | | | | | | | | | |
| 50 | | 900055 100311 | | 1 | BORU DİŞLİ KARŞ.AYAR SEKMANI | RETAINING RING | | | ♦ | ♦ | | |
| 51 | | 389 264 0051 | | 1 | BORU DİŞLİ KARŞILIĞI AYAR PULU | WASHER | | | ♦ | ♦ | | |
| 52 | K21.03707 | 389 264 0121 | | 1 | BORU DİŞLİ KARŞILIĞI | GEAR | | | ♦ | ♦ | | |
| 53 | | 389 264 0652 | | 1 | BİLYA AYAR RAYNELİ | THRUST WASHER | 0,10mm | | ♦ | ♦ | | |
| 53 | | 389 264 0752 | | 1 | BİLYA AYAR RAYNELİ | THRUST WASHER | 0,15mm | | ♦ | ♦ | | |
| 53 | | 389 264 0852 | | 1 | BİLYA AYAR RAYNELİ | THRUST WASHER | 0,30mm | | ♦ | ♦ | | |
| 53 | | 389 264 0952 | | 1 | BİLYA AYAR RAYNELİ | THRUST WASHER | 0,50mm | | ♦ | ♦ | | |

NOTES :

NOTLAR :





Original parts names, oem numbers, symbols and descriptions used in this catalogue are for reference purposes only.

# POWER TAKE OFF (OLD) (G 210 - G 240)

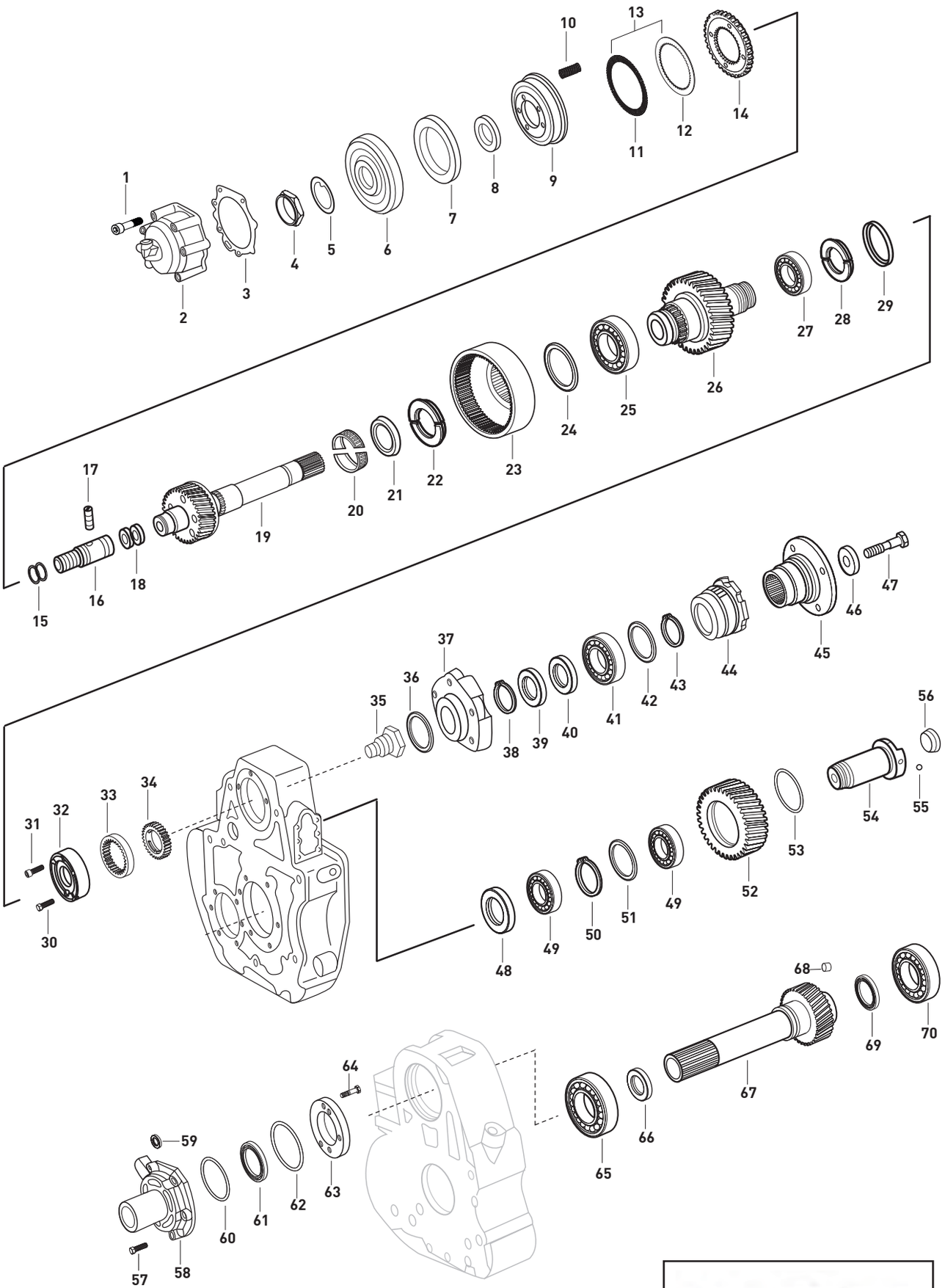


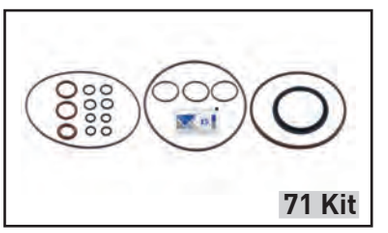




Original parts names, oem numbers, symbols and descriptions used in this catalogue are for reference purposes only.

| Fig. | Kacmaz No | Oem No | Oem Old No | Pcs. | Ürün Tanımı | Description | Sizes | Not | 1,09 | 1,48 | | |
|---|---|---|---|---|---|---|---|---|---|---|---|---|
| 53 | | 389 264 1052 | | 1 | BİLYA AYAR RAYNELİ | THRUST WASHER | 0,80mm | | ♦ | ♦ | | |
| 54 | K21.03669 | 389 264 0118 | | 1 | BORU DİŞLİ KARŞILIK MİLİ | PIN | | | ♦ | ♦ | | |
| 55 | | 005401 308000 | | 1 | BORU DİŞLİ KARŞILIK MİL BİLYASI | BALL | D.8 | | ♦ | ♦ | | |
| 56 | | 915046 012100 | | 1 | BORU DİŞLİ KARŞILIK MİL TAPASI | | | | ♦ | ♦ | | |
| 57 | | 304017 008042 | (000933 008119) | 6 | KAVRAMA FLANŞ VİDASI | SCREW | | | ♦ | ♦ | | |
| 58 | | 389 264 1144 | | 1 | KAPAK | COVER | | | ♦ | ♦ | | |
| 59 | K21.06637 | 019 997 8348 | (020 997 7948) | 1 | PRİZDİREK KEÇE KAPAK ORİNGİ | O-RING | 14X4mm | | ♦ | ♦ | | |
| 60 | | 385 264 1852 | | 1 | KAVRAMA FLANŞI AYAR RAYNELİ | THRUST WASHER | 0,10mm | | ♦ | ♦ | | |
| 60 | | 385 264 1752 | | 1 | KAVRAMA FLANŞI AYAR RAYNELİ | THRUST WASHER | 0,15mm | | ♦ | ♦ | | |
| 60 | | 385 264 1952 | | 1 | KAVRAMA FLANŞI AYAR RAYNELİ | THRUST WASHER | 0,30mm | | ♦ | ♦ | | |
| 61 | | 020 997 3447 | | 1 | KAVRAMA FLANŞ KEÇESİ | OIL SEAL | | | ♦ | ♦ | | |
| 62 | | 010 997 9548 | | 1 | KAVRAMA FLANŞ ORİNGİ | O-RING | 155X4mm | | ♦ | ♦ | | |
| 63 | | 389 264 0092 | | 1 | KAVRAMA FLANŞ FİLTRESİ | STRAINER | | | ♦ | ♦ | | |
| 64 | | 914125 006606 | | 3 | KAVRAMA FLANŞ FİLTRE VİDASI | SCREW | | | ♦ | ♦ | | |
| 65 | K26.00246 | 009 981 7405 | (005 981 1505) | 1 | BORU DİŞLİ ÖN BİLYA | ROLLER BEARING | 85X130X29mm | | ♦ | ♦ | | |
| | | | (005 981 1405) | | | | | | | | | |
| 66 | | 389 264 0260 | | 1 | BORU DİŞLİ KEÇESİ | OIL SEAL | | | ♦ | ♦ | | |
| 67 | | 389 264 0806 | | 1 | BORU DİŞLİ | DRIVE SHAFT | | | ♦ | | | |
| 67 | K21.06527 | 389 264 0906 | | 1 | BORU DİŞLİ | DRIVE SHAFT | | | | ♦ | | |
| 68 | | 000 997 1120 | | 1 | BORU DİŞLİ TAPASI | PLUG | | | ♦ | ♦ | | |
| 69 | K21.07013 | 019 997 8647 | | 1 | BORU DİŞLİ KEÇESİ | SEAL | | BROWN | ♦ | ♦ | | |
| 69 | K21.07014 | 019 997 8747 | | 1 | BORU DİŞLİ KEÇESİ | SEAL | | BLACK | ♦ | ♦ | | |
| 70 | | 009 981 6605 | (004 981 1705) | 1 | BORU DİŞLİ ARKA BİLYA | ROLLER BEARING | | | ♦ | ♦ | | |
| 71 | K21.04315 | | | Kit | ORİNG TAKIMI | O-RING KIT | | | ♦ | ♦ | | |

NOTES :

NOTLAR :





Original parts names, oem numbers, symbols and descriptions used in this catalogue are for reference purposes only.

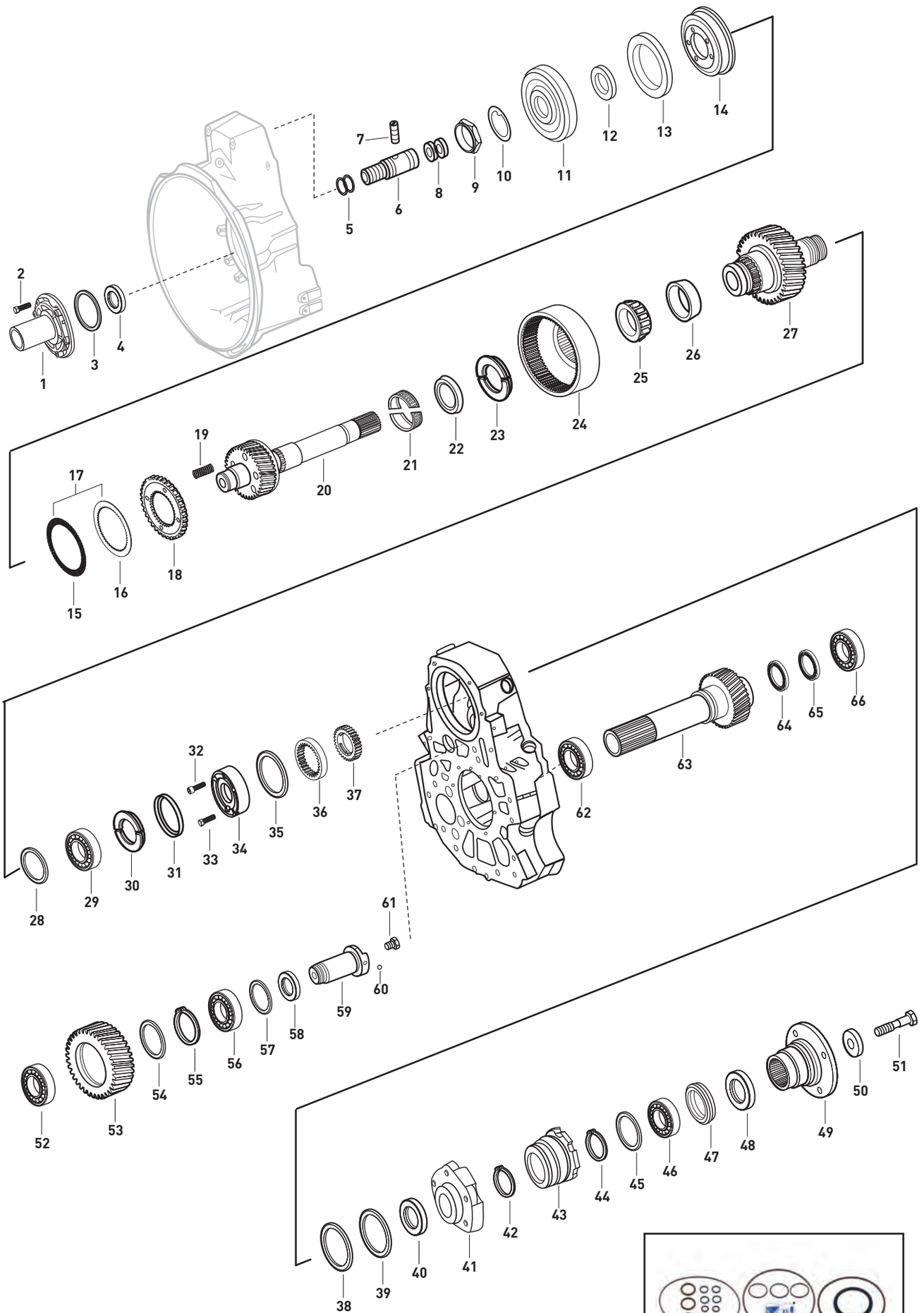






Original parts names, oem numbers, symbols and descriptions used in this catalogue are for reference purposes only.

| Fig. | Kacmaz No | Oem No | Oem Old No | Pcs. | Ürün Tanımı | Description | Sizes | Not | 1,09 | 1,48 | | |
|---|---|---|---|---|---|---|---|---|---|---|---|---|
| 1 | | 945 264 0044 | | 1 | KAPAK | COVER | | | ♦ | ♦ | | |
| 2 | | 000000 001049 | (910105 008019) | 6 | KAVRAMA FLANŞ VİDASI | SCREW | M8X50mm | | ♦ | ♦ | | |
| 3 | | 385 283 1952 | | 1 | KAVRAMA FLANŞI AYAR PULU | WASHER | 0,10mm | | ♦ | ♦ | | |
| 3 | | 385 283 1852 | | 1 | KAVRAMA FLANŞI AYAR PULU | WASHER | 0,15mm | | ♦ | ♦ | | |
| 4 | | 020 997 3447 | | 1 | KAVRAMA FLANŞ KEÇESİ | SEAL | | | ♦ | ♦ | | |
| 5 | K21.04330 | 002 037 3519 | | 2 | PİSTON SEKMANI | RETAINING RING | | | ♦ | ♦ | | |
| 6 | K21.06308 | 945 264 0085 | | 1 | YAĞLAMA BORUSU | OIL PIPE | | | ♦ | ♦ | | |
| 7 | | 000417 006001 | | 1 | YAĞLAMA BORU PİMİ | PIN | | | ♦ | ♦ | | |
| 8 | K21.06965 | 008 997 8945 | | 2 | YAĞLAMA BORU ORİNGİ | O-RING | 18X3mm | | ♦ | ♦ | | |
| 9 | K21.04360 | 945 264 0072 | (387 264 0072) | 1 | P.T.O. MİL SOMUNU | HEXAGON NUT | | | ♦ | ♦ | | |
| 10 | | 387 264 0262 | | 1 | KİLİTLEME PULU | THRUST WASHER | | | ♦ | ♦ | | |
| 11 | K21.06984 | 945 260 0463 | | 1 | KUMANDA SİLİNDİRİ | CYLINDER | | | ♦ | ♦ | | |
| 12 | K21.06536 | 001 997 8341 | (003 997 9447) | 1 | P.T.O. MİL KEÇESİ | SEAL | 60X49X4,3/2,8mm | | ♦ | ♦ | | |
| 13 | K21.06537 | 021 997 8647 | | 1 | P.T.O. MİL KEÇESİ | SEAL | 156X147,5X2,4mm | | ♦ | ♦ | | |
| 14 | K21.06538 | 945 264 0015 | | 1 | PİSTON | PISTON | | | ♦ | ♦ | | |
| 15 | K21.06250 | 945 264 0009 | | 8 | SARI FRENLEME | DISC OUTER | | | ♦ | ♦ | | |
| 16 | K21.06251 | 945 264 0008 | | 7 | ÇELİK FRENLEME | DISC INNER | | | ♦ | ♦ | | |
| 17 | K21.06254 | | | kit | FRENLEME TAKIMI | DISC KIT | | | ♦ | ♦ | | |
| 18 | K21.06530 | 945 264 0176 | | 1 | ÇELİK BALATA DİSKİ | DISC | | | ♦ | ♦ | | |
| 19 | K21.06179 | 385 993 3701 | | 5 | P.T.O. MİL YAYI | SPRING | | | ♦ | ♦ | | |
| 20 | K21.06175 | 945 264 0106 | (945 264 0506) | 1 | P.T.O. MİLİ | DRIVER SHAFT P.T.O. | | | ♦ | ♦ | | |
| 21 | | 011 981 4110 | (011 981 4010) | 1 | P.T.O. MİLİ MASURA BİLYA | NEEDLE BEARING | 45X55X20mm | | ♦ | ♦ | | |
| 22 | K21.04363 | 389 264 0073 | | 1 | PARÇALI KİLİT EMNİYET SACI | LOCK RING | | | ♦ | ♦ | | |
| 23 | K21.06543 | 389 264 0129 | | 1 | PARÇALI KİLİT | SPLIT RING | 3,97mm | | ♦ | ♦ | | |
| 23 | K21.06544 | 389 264 0729 | | 1 | PARÇALI KİLİT | SPLIT RING | 4,02mm | | ♦ | ♦ | | |
| 23 | K21.06545 | 389 264 0229 | | 1 | PARÇALI KİLİT | SPLIT RING | 4,07mm | | ♦ | ♦ | | |
| 23 | K21.06546 | 389 264 0829 | | 1 | PARÇALI KİLİT | SPLIT RING | 4,12mm | | ♦ | ♦ | | |
| 23 | K21.06547 | 389 264 0329 | | 1 | PARÇALI KİLİT | SPLIT RING | 4,17mm | | ♦ | ♦ | | |
| 23 | K21.06548 | 389 264 0929 | | 1 | PARÇALI KİLİT | SPLIT RING | 4,22mm | | ♦ | ♦ | | |
| 23 | K21.06558 | 389 264 0429 | | 1 | PARÇALI KİLİT | SPLIT RING | 4,27mm | | ♦ | ♦ | | |
| 24 | K21.06176 | 945 264 0007 | | 1 | P.T.O. ÇEMBER DİŞLİ | DISC SUPPORT | | | ♦ | ♦ | | |
| 25 | | 017 981 3705 | (002 981 4481) | 1 | RULMAN | INNER RING | | | ♦ | ♦ | | |
| 26 | K21.07048 | 001 981 9280 | | 1 | RULMAN DIŞ ÇANAK | OUTER RACE | | | ♦ | ♦ | | |
| 27 | K21.06178 | 945 264 0421 | | 1 | P.T.O. DİŞLİSİ | GEAR P.T.O. | | | ♦ | | | |
| 27 | K21.06177 | 945 264 0321 | | 1 | P.T.O. DİŞLİSİ | GEAR P.T.O. | | | | ♦ | | |
| 28 | | 389 264 1252 | | 1 | P.T.O. BİLYA RAYNELİ | THRUST WASHER | 0,05mm | | ♦ | ♦ | | |
| 28 | | 389 264 1352 | | 1 | P.T.O. BİLYA RAYNELİ | THRUST WASHER | 0,10mm | | ♦ | ♦ | | |
| 28 | | 389 264 1452 | | 1 | P.T.O. BİLYA RAYNELİ | THRUST WASHER | 0,15mm | | ♦ | ♦ | | |
| 28 | | 389 264 1552 | | 1 | P.T.O. BİLYA RAYNELİ | THRUST WASHER | 0,25mm | | ♦ | ♦ | | |
| 28 | | 389 264 1652 | | 1 | P.T.O. BİLYA RAYNELİ | THRUST WASHER | 0,30mm | | ♦ | ♦ | | |
| 28 | | 389 264 1752 | | 1 | P.T.O. BİLYA RAYNELİ | THRUST WASHER | 0,50mm | | ♦ | ♦ | | |
| 29 | | 009 981 6705 | (009 981 7205) | 1 | P.T.O. BİLYASI | ROLLER BEARING | | | ♦ | ♦ | | |
| 30 | K21.06559 | 387 262 2130 | | 1 | PARÇALI KİLİT | SPLIT RING | 3,60mm | | ♦ | ♦ | | |
| 30 | K21.06560 | 387 262 2230 | | 1 | PARÇALI KİLİT | SPLIT RING | 3,65mm | | ♦ | ♦ | | |
| 30 | K21.06561 | 387 262 3630 | | 1 | PARÇALI KİLİT | SPLIT RING | 3,70mm | | ♦ | ♦ | | |
| 30 | K21.06562 | 387 262 2330 | | 1 | PARÇALI KİLİT | SPLIT RING | 3,75mm | | ♦ | ♦ | | |
| 30 | K21.06549 | 387 262 3730 | | 1 | PARÇALI KİLİT | SPLIT RING | 3,80mm | | ♦ | ♦ | | |
| 30 | K21.06550 | 387 262 2430 | | 1 | PARÇALI KİLİT | SPLIT RING | 3,85mm | | ♦ | ♦ | | |
| 30 | K21.06551 | 387 262 3830 | | 1 | PARÇALI KİLİT | SPLIT RING | 3,90mm | | ♦ | ♦ | | |
| 30 | K21.06552 | 387 262 3930 | | 1 | PARÇALI KİLİT | SPLIT RING | 3,95mm | | ♦ | ♦ | | |
| 30 | K21.06553 | 387 262 2530 | | 1 | PARÇALI KİLİT | SPLIT RING | 4,00mm | | ♦ | ♦ | | |
| 30 | K21.06554 | 387 262 4030 | | 1 | PARÇALI KİLİT | SPLIT RING | 4,05mm | | ♦ | ♦ | | |
| 30 | K21.06555 | 387 262 4130 | | 1 | PARÇALI KİLİT | SPLIT RING | 4,10mm | | ♦ | ♦ | | |

NOTES :

NOTLAR :





Original parts names, oem numbers, symbols and descriptions used in this catalogue are for reference purposes only.

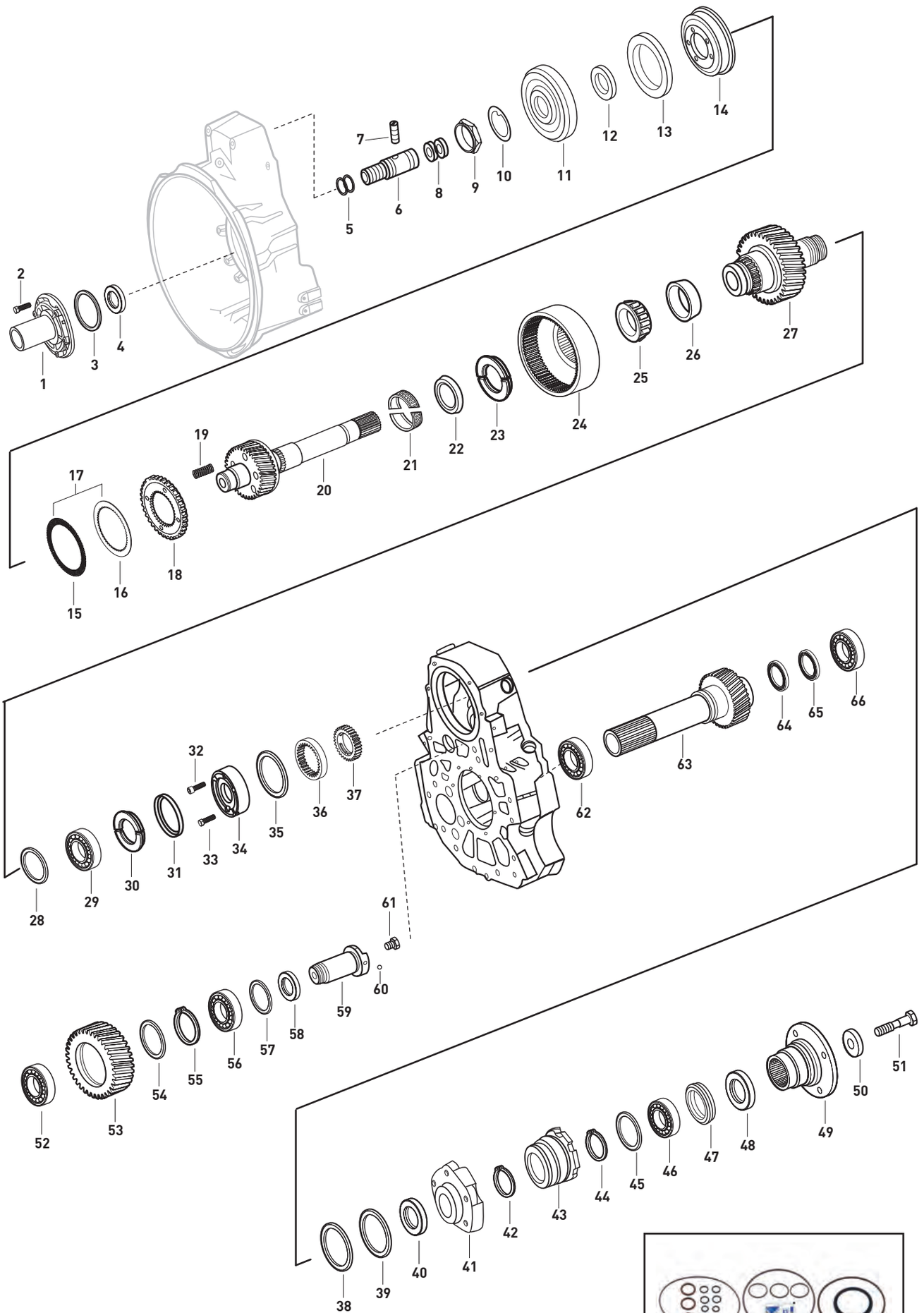









Original parts names, oem numbers, symbols and descriptions used in this catalogue are for reference purposes only.

| Fig. | Kacmaz No | Oem No | Oem Old No | Pcs. | Ürün Tanımı | Description | Sizes | Not | 1,09 | 1,48 | | |
|---|---|---|---|---|---|---|---|---|---|---|---|---|
| 30 | K21.06556 | 387 262 5230 | | 1 | PARÇALI KİLİT | SPLIT RING | 4,15mm | | ♦ | ♦ | | |
| 30 | K21.06557 | 387 262 2630 | | 1 | PARÇALI KİLİT | SPLIT RING | 4,20mm | | ♦ | ♦ | | |
| 30 | K21.06563 | 387 262 4230 | | 1 | PARÇALI KİLİT | SPLIT RING | 4,25mm | | ♦ | ♦ | | |
| 30 | K21.06564 | 387 262 0630 | | 1 | PARÇALI KİLİT | SPLIT RING | 4,30mm | | ♦ | ♦ | | |
| 30 | K21.06567 | 387 262 2730 | (387 262 2830) | 1 | PARÇALI KİLİT | SPLIT RING | 4,35mm | | ♦ | ♦ | | |
| 30 | K21.06568 | 387 262 2930 | (387 262 4330) | 1 | PARÇALI KİLİT | SPLIT RING | 4,50mm | | ♦ | ♦ | | |
| 30 | K21.06569 | 387 262 4430 | | 1 | PARÇALI KİLİT | SPLIT RING | 4,55mm | | ♦ | ♦ | | |
| 30 | K21.06570 | 387 262 4530 | (387 262 3030) | 1 | PARÇALI KİLİT | SPLIT RING | 4,65mm | | ♦ | ♦ | | |
| 30 | K21.06571 | 387 262 3230 | (387 262 3130) | 1 | PARÇALI KİLİT | SPLIT RING | 4,75mm | | ♦ | ♦ | | |
| 31 | K21.06541 | 387 262 0173 | | 1 | PARÇALI KİLİT EMNİYET SACI | LOCK RING | | | ♦ | ♦ | | |
| 32 | | 914125006512 | | 3 | POMPA BAĞLANTI VİDASI | SCREW | M6X40mm | | ♦ | ♦ | | |
| 33 | | 914125005100 | | 1 | POMPA BAĞLANTI VİDASI | SCREW | M5X30mm | | ♦ | ♦ | | |
| 34 | K21.06490 | 945 269 0104 | | 1 | POMPA ELEMANI | PUMP ELEMENT | | | ♦ | | | |
| 34 | K21.06540 | 945 269 0004 | | 1 | POMPA ELEMANI | PUMP ELEMENT | | | | ♦ | | |
| 35 | | 945 264 0287 | | 1 | DIŞ HALKA | SLEEVE | | | ♦ | ♦ | | |
| 36 | K21.06354 | 385 269 0906 | | 1 | DIŞ ROTOR | OUTER ROTOR | | | ♦ | | | |
| 36 | K21.06353 | 385 269 0306 | | 1 | DIŞ ROTOR | OUTER ROTOR | | | | ♦ | | |
| 37 | K21.06352 | 385 269 0706 | | 1 | İÇ ROTOR | INNER ROTOR | | | ♦ | | | |
| 37 | K21.06351 | 387 269 0006 | | 1 | İÇ ROTOR | INNER ROTOR | | | | ♦ | | |
| 38 | | 945 264 0187 | | 1 | P.T.O.GÖVDESİ DIŞ HALKA | SLEEVE | | | ♦ | ♦ | | |
| 39 | | 023 997 4148 | | 1 | P.T.O.GÖVDE KEÇESİ | SEAL | 189X3,43mm | | ♦ | ♦ | | |
| 40 | | 015 997 2248 | | 1 | ARA FLANŞ ORİNGİ | O-RING | 82X3mm | | ♦ | ♦ | | |
| 40 | | 018 997 2448 | | 1 | ARA FLANŞ ORİNGİ | O-RING | 94,5X2,5mm | | ♦ | ♦ | | |
| 41 | | 389 264 0944 | | 1 | ARA FLANŞ | INTERMEDIATE FLANGE | | | ♦ | ♦ | | |
| 42 | K21.04342 | 007 994 0041 | (387 262 2273) | 1 | ARA FLANŞ SEKMANI | RETAINING RING | 2,50mm | | ♦ | ♦ | | |
| 43 | | 389 264 0072 | | 1 | SOMUN | NUT | | | ♦ | ♦ | | |
| 44 | | 900055 072312 | | 1 | EMNİYET SEKMANI | LOCK RING | | | ♦ | ♦ | | |
| 45 | | 673 263 0152 | (990 263 1200) | 1 | P.T.O. FLANŞ BİLYA AYAR RAYNELİ | THRUST WASHER | 0,05mm | | ♦ | ♦ | | |
| 45 | | 673 263 0252 | | 1 | P.T.O. FLANŞ BİLYA AYAR RAYNELİ | THRUST WASHER | 0,10mm | | ♦ | ♦ | | |
| 45 | | 673 263 0352 | | 1 | P.T.O. FLANŞ BİLYA AYAR RAYNELİ | THRUST WASHER | 0,15mm | | ♦ | ♦ | | |
| 45 | | 673 263 0452 | (990 263 5600) | 1 | P.T.O. FLANŞ BİLYA AYAR RAYNELİ | THRUST WASHER | 0,25mm | | ♦ | ♦ | | |
| 45 | | 673 263 0552 | | 1 | P.T.O. FLANŞ BİLYA AYAR RAYNELİ | THRUST WASHER | 0,30mm | | ♦ | ♦ | | |
| 45 | | 673 263 0752 | (990 263 1400) | 1 | P.T.O. FLANŞ BİLYA AYAR RAYNELİ | THRUST WASHER | 0,40mm | | ♦ | ♦ | | |
| 45 | | 673 263 0852 | | 1 | P.T.O. FLANŞ BİLYA AYAR RAYNELİ | THRUST WASHER | 0,45mm | | ♦ | ♦ | | |
| 45 | | 673 263 0652 | | 1 | P.T.O. FLANŞ BİLYA AYAR RAYNELİ | THRUST WASHER | 0,50mm | | ♦ | ♦ | | |
| 45 | | 673 263 0952 | | 1 | P.T.O. FLANŞ BİLYA AYAR RAYNELİ | THRUST WASHER | 0,55mm | | ♦ | ♦ | | |
| 45 | | 673 263 1052 | | 1 | P.T.O. FLANŞ BİLYA AYAR RAYNELİ | THRUST WASHER | 0,60mm | | ♦ | ♦ | | |
| 45 | | 673 263 1152 | | 1 | P.T.O. FLANŞ BİLYA AYAR RAYNELİ | THRUST WASHER | 0,65mm | | ♦ | ♦ | | |
| 45 | | 673 263 1252 | (990 263 1500) | 1 | P.T.O. FLANŞ BİLYA AYAR RAYNELİ | THRUST WASHER | 0,70mm | | ♦ | ♦ | | |
| 45 | | 673 263 1352 | | 1 | P.T.O. FLANŞ BİLYA AYAR RAYNELİ | THRUST WASHER | 0,75mm | | ♦ | ♦ | | |
| 46 | | 009 981 7305 | (990 981 4300) | 1 | P.T.O. FLANŞ BİLYASI | ROLLER BEARING | | | ♦ | ♦ | | |
| | | | (007 981 3705) | | | | | | | | | |
| 47 | K21.06992 | 011 997 3147 | | 1 | ARA FLANŞ KEÇESİ | OIL SEAL | 55X72X10mm | | ♦ | ♦ | | |
| 48 | K21.07012 | 387 264 0651 | | 1 | FLANŞ ARA PULU | WASHER | | | ♦ | ♦ | | |
| 49 | K21.06590 | 387 264 0545 | | 1 | P.T.O. FLANŞI | FLANGE | 120mm | | ♦ | ♦ | | |
| 49 | K21.06591 | 945 264 0945 | | 1 | P.T.O. FLANŞI | FLANGE | 120mm | | ♦ | ♦ | | |
| 49 | | 945 264 1045 | | 1 | P.T.O. FLANŞI | FLANGE | 150mm | | ♦ | ♦ | | |
| 50 | | 387 264 0276 | | 1 | FLANŞ VİDA ARA PULU | WASHER | | | ♦ | ♦ | | |
| 51 | | 360 990 1304 | | 1 | FLANŞ VİDASI | SCREW | | | ♦ | ♦ | | |
| 52 | | 013 981 4605 | | 1 | BORU DİŞLİ KARŞILIK BİLYASI | ROLLER BEARING | | | ♦ | ♦ | | |
| 53 | K21.06174 | 945 264 0221 | | 1 | BORU DİŞLİ KARŞILIĞI | GEAR | | | ♦ | ♦ | | |
| 54 | | 945 264 0251 | | 1 | BORU DİŞ.KARŞ. AYAR PULU | THRUST WASHER | | | ♦ | ♦ | | |
| 55 | | 900055 100311 | | 1 | EMNİYET SEKMANI | LOCK RING | | | ♦ | ♦ | | |

NOTES :

NOTLAR :





Original parts names, oem numbers, symbols and descriptions used in this catalogue are for reference purposes only.

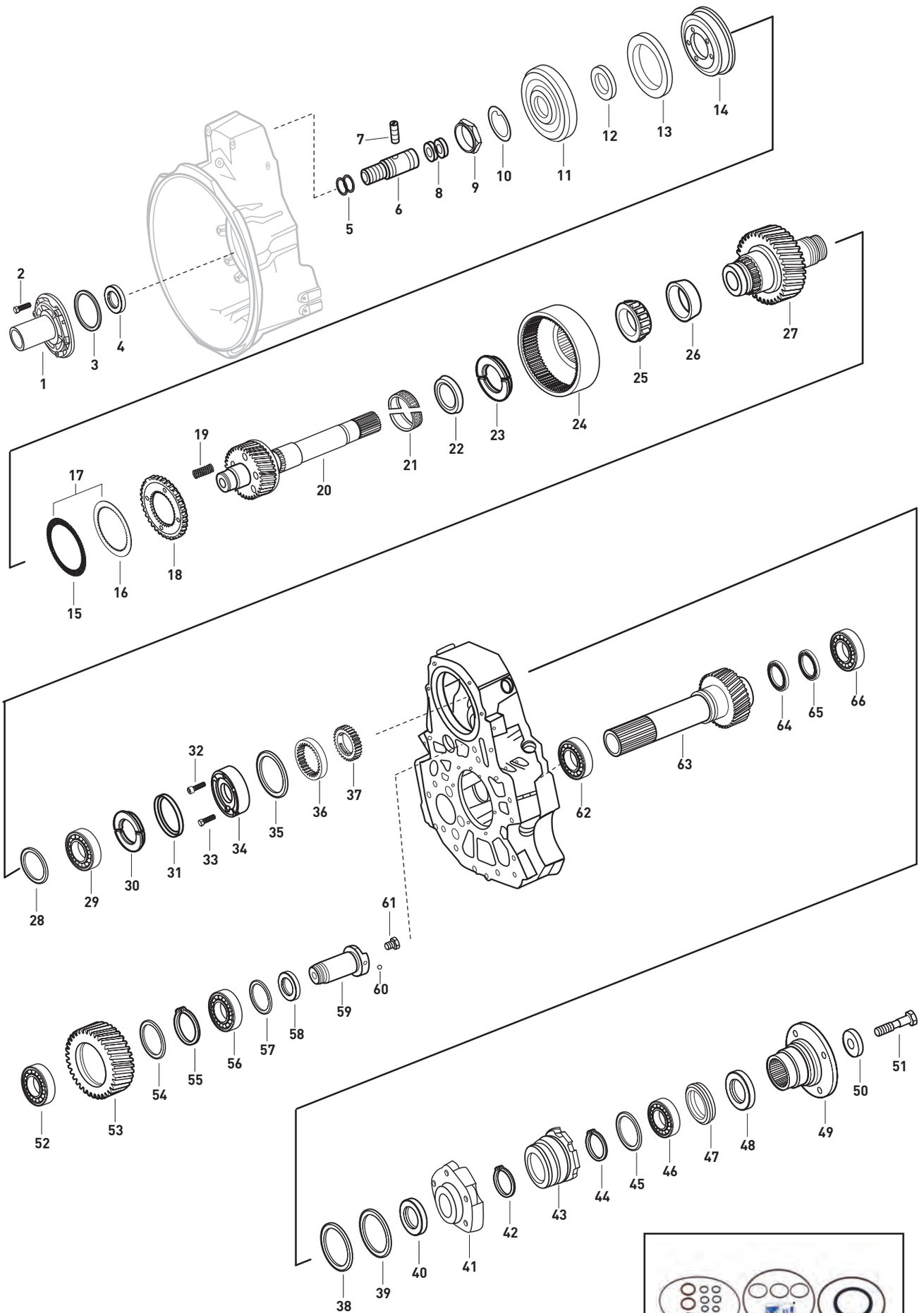




Original parts names, oem numbers, symbols and descriptions used in this catalogue are for reference purposes only.

| Fig. | Kacmaz No | Oem No | Oem Old No | Pcs. | Ürün Tanımı | Description | Sizes | Not | 1,09 | 1,48 |
|---|---|---|---|---|---|---|---|---|---|---|
| 56 | K21.03606 | 015 981 9005 | (014 981 1405) | 1 | BORU DİŞLİ KARŞILIK BİLYASI | ROLLER BEARING | 50,8X100X35mm | | ♦ | ♦ |
| | | | (012 981 7405) | | | | | | | |
| | | | (012 981 5105) | | | | | | | |
| 57 | | 389 264 0652 | | 1 | BİLYA AYAR RAYNELİ | THRUST WASHER | 0,10mm | | ♦ | ♦ |
| 57 | | 389 264 0752 | | 1 | BİLYA AYAR RAYNELİ | THRUST WASHER | 0,15mm | | ♦ | ♦ |
| 57 | | 389 264 0852 | | 1 | BİLYA AYAR RAYNELİ | THRUST WASHER | 0,30mm | | ♦ | ♦ |
| 57 | | 389 264 0952 | | 1 | BİLYA AYAR RAYNELİ | THRUST WASHER | 0,50mm | | ♦ | ♦ |
| 57 | | 389 264 1052 | | 1 | BİLYA AYAR RAYNELİ | THRUST WASHER | 0,80mm | | ♦ | ♦ |
| 58 | | 010 997 7445 | | 1 | BORU DİŞLİ KARŞILIK LASTİĞİ | SEAL RING | 39,2X3mm | | ♦ | ♦ |
| 59 | | 945 260 0027 | | 1 | BORU DİŞLİ KARŞILIK MİLİ | SPINDLE | | | ♦ | ♦ |
| 60 | | 005401 308000 | | 1 | BORU DİŞLİ KARŞILIK MİL BİLYASI | BALL | D.8 | | ♦ | ♦ |
| 61 | | 915046 012100 | | 1 | BORU DİŞ. KARŞ.MİL TAPASI | PLUG | | | ♦ | ♦ |
| 62 | K21.06991 | 013 981 4705 | | 1 | BORU DİŞLİ ÖN BİLYA | ROLLER BEARING | | | ♦ | ♦ |
| 63 | K21.06173 | 945 264 0306 | | 1 | BORU DİŞLİ | DRIVE SHAFT | | | ♦ | |
| 63 | K21.06172 | 945 264 0406 | | 1 | BORU DİŞLİ | DRIVE SHAFT | | | | ♦ |
| 64 | K21.07014 | 019 997 8747 | | 1 | BORU DİŞLİ KEÇESİ | SEAL | | BLACK | ♦ | ♦ |
| 65 | K21.07013 | 019 997 8647 | | 1 | BORU DİŞLİ KEÇESİ | SEAL | | BROWN | ♦ | ♦ |
| 66 | K26.00246 | 009 981 7405 | (005 981 1505) | 1 | BORU DİŞLİ ARKA BİLYA | ROLLER BEARING | 85X130X29mm | | ♦ | ♦ |
| | | | (005 981 1405) | | | | | | | |
| 67 | K21.04315 | | | Kit | ORİNG TAKIMI | O-RING KIT | | | ♦ | ♦ |

NOTES :

NOTLAR :





Original parts names, oem numbers, symbols and descriptions used in this catalogue are for reference purposes only.

# SHIFT CONTROL TOWER MANUAL (LEFT) / VİTES KUMANDA KULESİ MANUEL (SOL)
## OLD MODEL







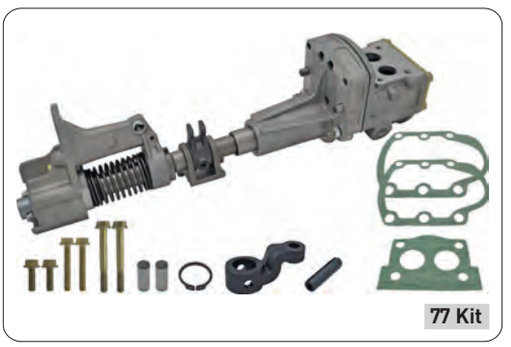


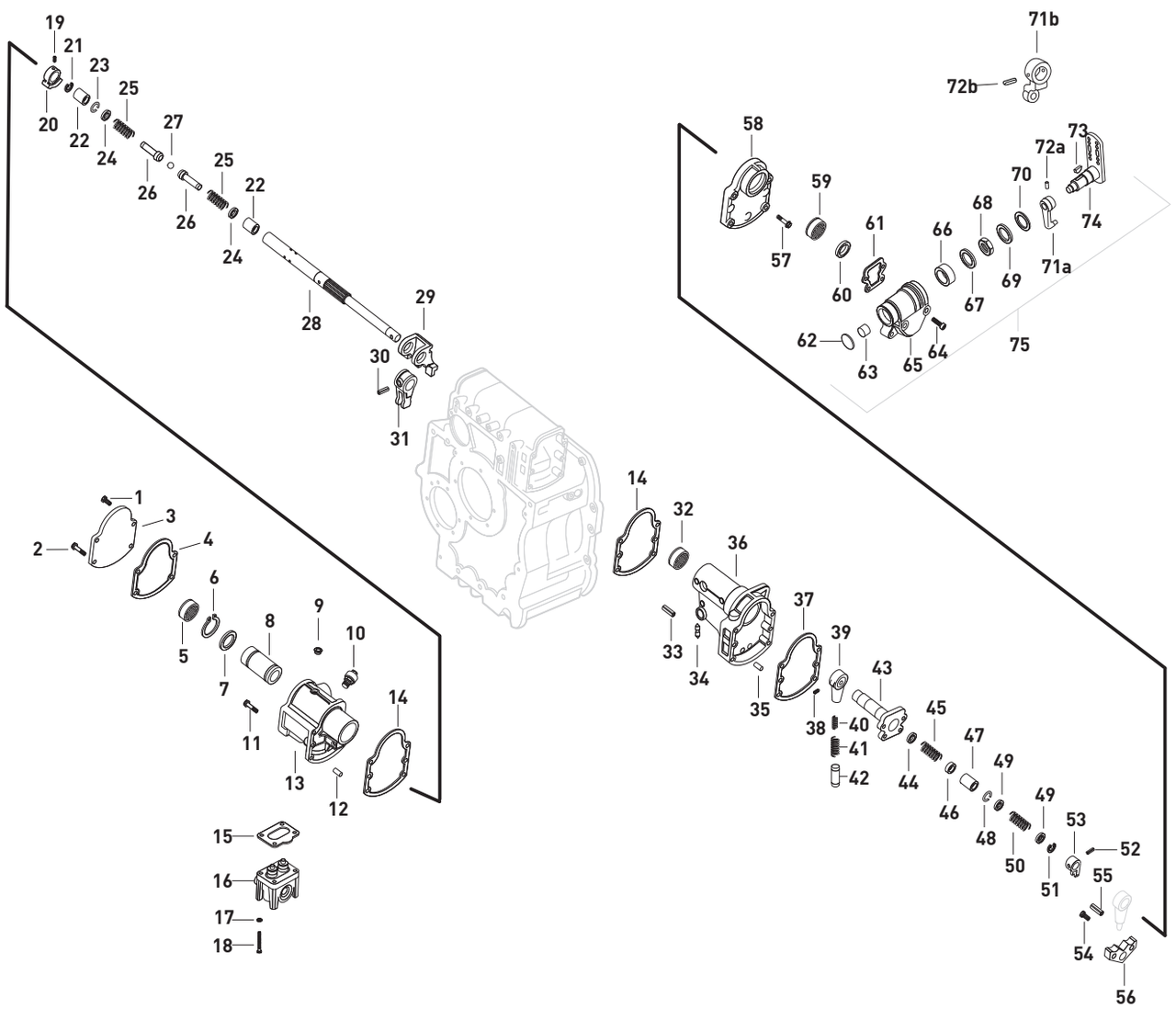




Original parts names, oem numbers, symbols and descriptions used in this catalogue are for reference purposes only.

| Fig. | Kacmaz No | Oem No | Oem Old No | Pcs. | Ürün Tanımı | Description | Sizes | Not | G125-16 | G135-16 | G155-16 | G180-16 | G200-16 | G210-16 | G240-16 | G 155-9 |
|---|---|---|---|---|---|---|---|---|---|---|---|---|---|---|---|---|
| 1 | | 304017 008021 | (000933 008147) | 2 | KULE KAPAK VİDASI | SCREW | M8X20 | | ♦ | ♦ | ♦ | ♦ | ♦ | ♦ | ♦ | ♦ |
| 2 | | 304014 008021 | (000931 008247) | 2 | KULE KAPAK VİDASI | SCREW | M8X120 | | ♦ | ♦ | ♦ | ♦ | ♦ | ♦ | ♦ | |
| 3 | | 389 268 0334 | | 1 | KULE KAPAĞI | BEARING COVER | | | ♦ | ♦ | ♦ | ♦ | ♦ | ♦ | ♦ | ♦ |
| 4 | | 389 268 2180 | (389 268 1080) | 1 | KULE KAPAK CONTASI | BEARING COVER GASKET | | | ♦ | ♦ | ♦ | ♦ | ♦ | ♦ | ♦ | |
| 4 | | 389 268 2080 | | 1 | KULE KAPAK CONTASI | BEARING COVER GASKET | | | | | | | | | | ♦ |
| 5 | K21.03849 | 005 981 3110 | | 1 | KULE KAPAĞI MASURA BİLYA | NEEDLE CAGE | | | ♦ | ♦ | ♦ | ♦ | ♦ | ♦ | ♦ | ♦ |
| 6 | | 900055 040300 | | 2 | KULE KAPAK SEKMANI | LOCK RING | | | ♦ | ♦ | ♦ | ♦ | ♦ | ♦ | ♦ | |
| 7 | | 000988 040001 | | 2 | KULE KAPAK PULU | FITTED WASHER | | | ♦ | ♦ | ♦ | ♦ | ♦ | ♦ | ♦ | |
| 8 | | 389 268 1150 | | 1 | KULE KAPAK ARA BURCU | BUSHING | | | ♦ | ♦ | ♦ | ♦ | ♦ | ♦ | ♦ | ♦ |
| 9 | K21.03204 | 389 261 1433 | (000443 012001) | 1 | KULE GÖVDE SAÇ TAPASI | PLUG | | | ♦ | ♦ | ♦ | ♦ | ♦ | ♦ | ♦ | ♦ |
| 10 | | 111 260 0058 | | 1 | KULE GÖVDE HAVALANDIRMA | BLEED PLUG | | | ♦ | ♦ | ♦ | ♦ | ♦ | ♦ | ♦ | ♦ |
| 11 | | 914126 008017 | | 2 | KULE GÖVDE VİDASI | SCREW | M8X22 | | ♦ | ♦ | ♦ | ♦ | ♦ | ♦ | ♦ | |
| 11 | | 914126 008089 | | 2 | KULE GÖVDE VİDASI | SCREW | | | | | | | | | | ♦ |
| 12 | | 000007 010102 | (000007 010239) | 2 | KULE GÖVDE ORTALAMA PİMİ | CYLINDRICAL PIN | | | ♦ | ♦ | ♦ | ♦ | ♦ | ♦ | ♦ | ♦ |
| 13 | | 389 268 1712 | | 1 | KULE GÖVDESİ | BEARING COVER | | | ♦ | ♦ | ♦ | ♦ | ♦ | ♦ | ♦ | |
| 13 | | 389 268 1812 | | 1 | KULE GÖVDESİ | BEARING COVER | | | | | | | | | | ♦ |
| 14 | | 389 268 1180 | (389 268 0180) | 2 | KULE GÖVDE CONTASI | BEARING COVER GASKET | | | ♦ | ♦ | ♦ | ♦ | ♦ | ♦ | ♦ | ♦ |
| 15 | | 385 268 0380 | (385 268 0280) | 1 | AĞIR SERİ VALF CONTASI | VALVE GASKET | | | ♦ | ♦ | ♦ | ♦ | ♦ | ♦ | ♦ | ♦ |
| 16 | K21.06164 | 001 260 8457 | (001 260 4757) | 1 | AĞIR SERİ VALFİ | VALVE | | | ♦ | ♦ | ♦ | ♦ | ♦ | ♦ | ♦ | ♦ |
| | | | (001 260 3557) | | | | | | | | | | | | | |
| | | | (000 260 5457) | | | | | | | | | | | | | |
| 17 | | 000137 008212 | (000137 008204) | 4 | VALF VİDA RONDELASI | SPRING WASHER | | | ♦ | ♦ | ♦ | ♦ | ♦ | ♦ | ♦ | ♦ |
| 18 | | 914141 008111 | | 4 | AĞIR SERİ VALF VİDASI | SCREW | | | ♦ | ♦ | ♦ | ♦ | ♦ | ♦ | ♦ | ♦ |
| 19 | | 389 997 0319 | (387 997 0119) | 1 | KUMANDA TOPU EMNİYET VİDASI | THREADED PIN | | | ♦ | ♦ | ♦ | ♦ | ♦ | ♦ | ♦ | ♦ |
| 20 | K21.06852 | 389 267 0238 | | 1 | AĞIR SERİ KUMANDA TOPU | DRIVER | | | ♦ | ♦ | ♦ | ♦ | ♦ | ♦ | ♦ | ♦ |
| 21 | | 000472 016000 | | 1 | KULE SEKMANI | LOCK RING | | | ♦ | ♦ | ♦ | ♦ | ♦ | ♦ | ♦ | ♦ |
| 22 | | 389 267 2150 | | 2 | KULE AYAR BURCU | BUSHING | 8,50mm | | ♦ | ♦ | ♦ | ♦ | ♦ | ♦ | ♦ | ♦ |
| 22 | | 389 267 2050 | | 2 | KULE AYAR BURCU | BUSHING | 8,40mm | | ♦ | ♦ | ♦ | ♦ | ♦ | ♦ | ♦ | ♦ |
| 22 | | 389 267 1950 | | 2 | KULE AYAR BURCU | BUSHING | 8,30mm | | ♦ | ♦ | ♦ | ♦ | ♦ | ♦ | ♦ | ♦ |
| 22 | | 389 267 1850 | | 2 | KULE AYAR BURCU | BUSHING | 8,20mm | | ♦ | ♦ | ♦ | ♦ | ♦ | ♦ | ♦ | ♦ |
| 22 | | 389 267 1750 | | 2 | KULE AYAR BURCU | BUSHING | 8,10mm | | ♦ | ♦ | ♦ | ♦ | ♦ | ♦ | ♦ | ♦ |
| 22 | | 389 267 1650 | | 2 | KULE AYAR BURCU | BUSHING | 8,00mm | | ♦ | ♦ | ♦ | ♦ | ♦ | ♦ | ♦ | ♦ |
| 22 | | 389 267 1550 | | 2 | KULE AYAR BURCU | BUSHING | 7,90mm | | ♦ | ♦ | ♦ | ♦ | ♦ | ♦ | ♦ | ♦ |
| 22 | | 389 267 1450 | | 2 | KULE AYAR BURCU | BUSHING | 7,80mm | | ♦ | ♦ | ♦ | ♦ | ♦ | ♦ | ♦ | ♦ |
| 22 | | 389 267 1350 | | 2 | KULE AYAR BURCU | BUSHING | 7,70mm | | ♦ | ♦ | ♦ | ♦ | ♦ | ♦ | ♦ | ♦ |
| 22 | | 389 267 1250 | | 2 | KULE AYAR BURCU | BUSHING | 7,60mm | | ♦ | ♦ | ♦ | ♦ | ♦ | ♦ | ♦ | ♦ |
| 22 | | 389 267 1150 | | 2 | KULE AYAR BURCU | BUSHING | 7,50mm | | ♦ | ♦ | ♦ | ♦ | ♦ | ♦ | ♦ | ♦ |
| 23 | | 912009 009101 | | 2 | KULE SEKMANI | SNAP RING | | | ♦ | ♦ | ♦ | ♦ | ♦ | ♦ | ♦ | ♦ |
| 24 | | 389 268 0252 | | 4 | KULE PULU | SPACER WASHER | | | ♦ | ♦ | ♦ | ♦ | ♦ | ♦ | ♦ | ♦ |
| 25 | | 389 993 2901 | | 2 | KULE TAZYİK SİBOP YAYI | SPRING | | | ♦ | ♦ | ♦ | ♦ | ♦ | ♦ | ♦ | |
| 25 | K21.07004 | 945 993 0401 | (389 993 5501) | 2 | KULE TAZYİK SİBOP YAYI | SPRING | | | | | | | | | | ♦ |
| 26 | | 389 265 0416 | | 2 | KULE TAZYİK SİBOBU | THRUST PIECE | | | ♦ | ♦ | ♦ | ♦ | ♦ | ♦ | ♦ | ♦ |
| 27 | K21.06021 | 005401 311000 | | 6 | KULE TAZYİK SİBOP BİLYASI | BALL | Ø11 | | ♦ | ♦ | ♦ | ♦ | ♦ | ♦ | ♦ | ♦ |
| 28 | | 389 268 0829 | | 1 | VİTES KUMANDA KULE MİLİ | SHIFTING ROD | | | ♦ | ♦ | ♦ | ♦ | ♦ | ♦ | ♦ | |
| 28 | | 389 268 2229 | | 1 | VİTES KUMANDA KULE MİLİ | SHIFTING ROD | | | | | | | | | | ♦ |
| 29 | | 389 268 2616 | (389 268 0616) | 1 | VİTES KULE MİL LEVYESİ | LEVER | | | ♦ | ♦ | ♦ | ♦ | ♦ | ♦ | ♦ | ♦ |
| 30 | | 308748 010000 | | 1 | VİTES KULE MİL SEÇİCİ PİMİ | CLAMPING PIN | | | ♦ | ♦ | ♦ | ♦ | ♦ | ♦ | ♦ | ♦ |
| 31 | | 389 268 0533 | | 1 | VİTES KULE MİL SEÇİCİSİ | LEVER | | | ♦ | ♦ | ♦ | ♦ | ♦ | ♦ | ♦ | ♦ |
| 32 | K21.03850 | 009 981 0510 | (017 981 9310) | 1 | KULE GÖVDESİ MASURA BİLYA | NEEDLE CAGE | | | ♦ | ♦ | ♦ | ♦ | ♦ | ♦ | ♦ | ♦ |
| | | | (017 981 9010) | | | | | | | | | | | | | |
| 33 | | 001481 004027 | | 1 | KULE GÖVDE PİMİ | LOCK PIN | Ø4 | | ♦ | ♦ | ♦ | ♦ | ♦ | ♦ | ♦ | ♦ |
| 34 | | 389 267 0474 | | 1 | VİTES KİLİTLEME PİMİ | PIN | | | ♦ | ♦ | ♦ | ♦ | ♦ | ♦ | ♦ | ♦ |
| 35 | | 000007 010235 | | 2 | KULE GÖVDE ORTALAMA PİMİ | CYLINDRICAL PIN | Ø10 | | ♦ | ♦ | ♦ | ♦ | ♦ | ♦ | ♦ | ♦ |

NOTES :

NOTLAR :





Original parts names, oem numbers, symbols and descriptions used in this catalogue are for reference purposes only.

# SHIFT CONTROL TOWER MANUAL (LEFT) / VİTES KUMANDA KULESİ MANUEL (SOL)
## OLD MODEL


75 Kit


76 Kit

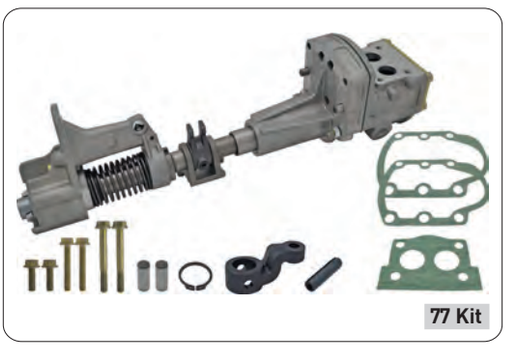
77 Kit

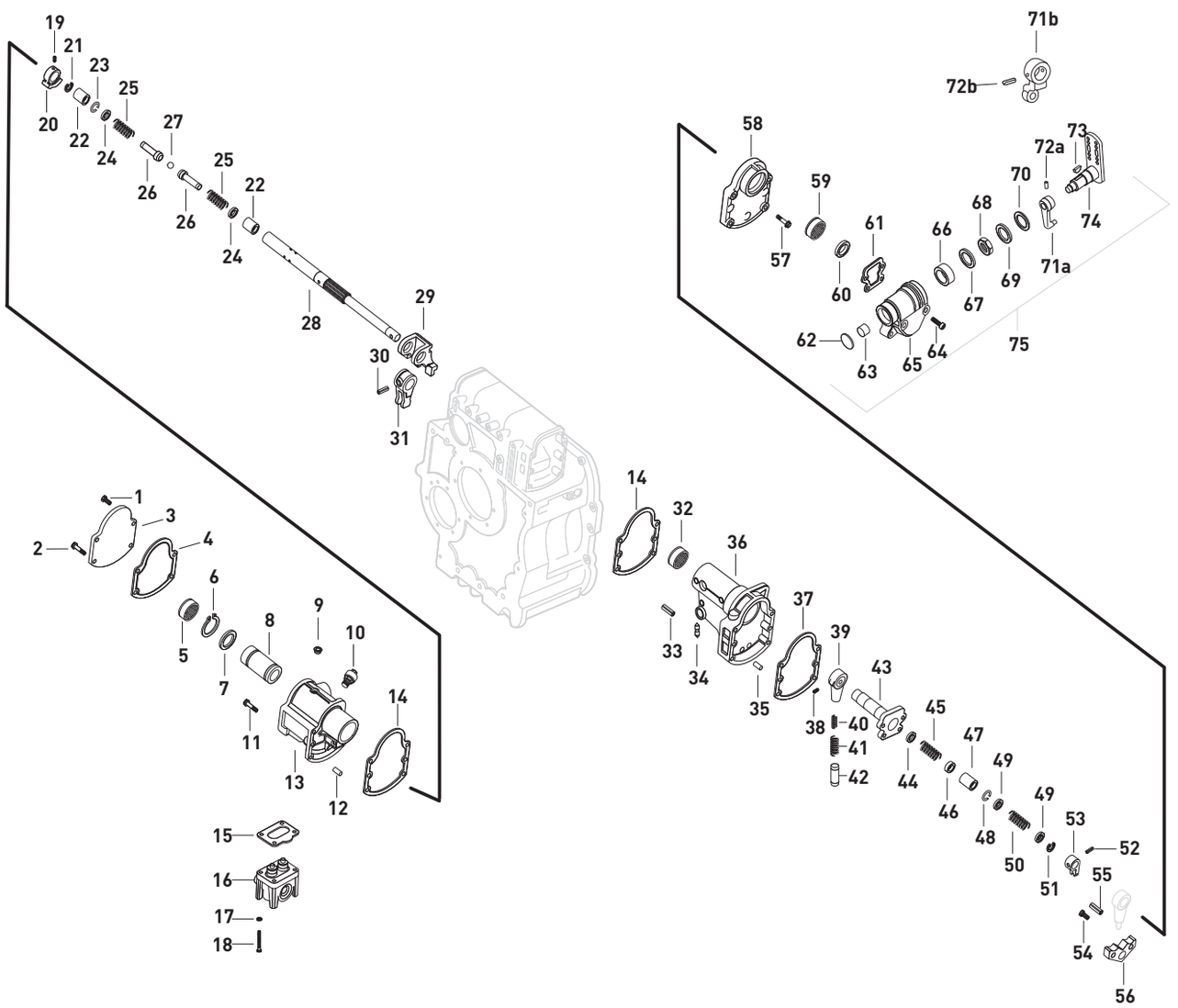






Original parts names, oem numbers, symbols and descriptions used in this catalogue are for reference purposes only.

| Fig. | Kacmaz No | Oem No | Oem Old No | Pcs. | Ürün Tanımı | Description | Sizes | Not | G125-16 | G135-16 | G155-16 | G180-16 | G200-16 | G210-16 | G240-16 | G 155-9 |
|---|---|---|---|---|---|---|---|---|---|---|---|---|---|---|---|---|
| 36 | | 389 268 1212 | (389 268 1312) | 1 | KULE GÖVDESİ | BEARING COVER | | | ♦ | ♦ | ♦ | ♦ | ♦ | ♦ | ♦ | |
| | | | (389 268 0934) | | | | | | | | | | | | | |
| | | | (389 268 0534) | | | | | | | | | | | | | |
| 36 | | 389 268 2312 | (389 268 2212) | 1 | KULE GÖVDESİ | BEARING COVER | | | | | | | | | | ♦ |
| 36 | K21.06278 | 389 268 3412 | | 1 | KULE GÖVDESİ | BEARING COVER | | | | | | | | | | ♦ |
| 37 | | 389 268 1480 | (389 268 0280) | 1 | KULE GÖVDE CONTASI | BEARING COVER GASKET | | | ♦ | ♦ | ♦ | ♦ | ♦ | ♦ | ♦ | ♦ |
| 38 | | 389 997 0419 | (389 997 0019) | 2 | VİTES ATLATMA EMN.VİDASI | THREADED PIN | M10 | | ♦ | ♦ | ♦ | ♦ | ♦ | ♦ | ♦ | ♦ |
| 39 | K21.06983 | 945 268 0013 | (389 268 0446) | 1 | VİTES ATLATMA GÖVDESİ | SELECTOR BODY | | | ♦ | ♦ | ♦ | ♦ | ♦ | ♦ | ♦ | ♦ |
| 40 | K21.06165 | 387 993 2201 | | 1 | VİTES ATLATMA YAYI İÇ | SPRING | | | ♦ | ♦ | ♦ | ♦ | ♦ | ♦ | ♦ | ♦ |
| 41 | K21.06166 | 387 993 2101 | | 1 | VİTES ATLATMA YAYI DIŞ | SPRING | | | ♦ | ♦ | ♦ | ♦ | ♦ | ♦ | ♦ | ♦ |
| 42 | K21.03487 | 945 268 0474 | (387 268 2374) | 1 | VİTES ATLATMA FİŞEĞİ | LOCKING PIN | | | ♦ | ♦ | ♦ | ♦ | ♦ | ♦ | ♦ | ♦ |
| | | | (945 268 0974) | | | | | | | | | | | | | |
| 43 | | 389 260 5682 | | 1 | KULE KOVANI | SHAFT | | | ♦ | ♦ | ♦ | ♦ | ♦ | ♦ | ♦ | ♦ |
| 44 | | 387 268 0776 | | 1 | KULE KOVAN PULU | WASHER | | | ♦ | ♦ | ♦ | ♦ | ♦ | ♦ | ♦ | ♦ |
| 45 | | 387 993 0501 | | 1 | KULE KOVAN YAYI | SPRING | | | ♦ | ♦ | ♦ | ♦ | ♦ | ♦ | ♦ | ♦ |
| 46 | | 389 268 2450 | | 1 | KULE KOVAN ARA BURCU | BUSHING | | | ♦ | ♦ | ♦ | ♦ | ♦ | ♦ | ♦ | ♦ |
| 47 | | 389 268 0053 | | 1 | KULE KOVAN BURCU | SPACER TUBE | | | ♦ | ♦ | ♦ | ♦ | ♦ | ♦ | ♦ | ♦ |
| 48 | | 912009 018100 | | 1 | KULE KOVAN BURÇ SEKMANI | SNAP RING | | | ♦ | ♦ | ♦ | ♦ | ♦ | ♦ | ♦ | ♦ |
| 49 | | 389 268 0276 | | 2 | KULE KOVAN YAY PULU | WASHER | | | ♦ | ♦ | ♦ | ♦ | ♦ | ♦ | ♦ | ♦ |
| 50 | | 389 993 4201 | | 1 | KULE KOVAN YAYI | SPRING | | | ♦ | ♦ | ♦ | ♦ | ♦ | ♦ | ♦ | ♦ |
| 51 | | 000472 032001 | (000472 032000) | 1 | KULE KOVAN SEKMANI | LOCK RING | | | ♦ | ♦ | ♦ | ♦ | ♦ | ♦ | ♦ | ♦ |
| 52 | | 308750 008001 | | 1 | SÜRÜCÜ EMNİYET PİMİ | CLAMPING PIN | | | ♦ | ♦ | ♦ | ♦ | ♦ | ♦ | ♦ | ♦ |
| 53 | | 389 265 0216 | | 1 | VİTES KUMANDA SÜRÜCÜSÜ | DRIVER | | | ♦ | ♦ | ♦ | ♦ | ♦ | ♦ | ♦ | ♦ |
| 54 | | 009 990 0101 | | 1 | VİTES ATLATMA KİLİT VİDASI | SCREW | M8X22 | | ♦ | ♦ | ♦ | ♦ | ♦ | ♦ | ♦ | ♦ |
| 55 | | 308748 006000 | | 2 | VİTES ATLATMA KİLİT PİMİ | CLAMPING PIN | | | ♦ | ♦ | ♦ | ♦ | ♦ | ♦ | ♦ | ♦ |
| 56 | K21.03488 | 387 268 1846 | | 1 | VİTES ATLATMA KİLİDİ | SHIFTING SEGMENT | | | ♦ | ♦ | ♦ | ♦ | ♦ | ♦ | ♦ | ♦ |
| 57 | | 914126 008078 | (914126 008020) | 4 | KULE KAPAK VİDASI | SCREW | M8X60 | | ♦ | ♦ | ♦ | ♦ | ♦ | ♦ | ♦ | ♦ |
| 58 | | 389 268 6412 | (389 268 1334) | 1 | KULE KAPAĞI | BEARING COVER | | | ♦ | ♦ | ♦ | ♦ | ♦ | ♦ | ♦ | ♦ |
| | | | (389 268 1234) | | | | | | | | | | | | | |
| 59 | K21.03851 | 007 981 2110 | (017 981 9110) | 1 | KULE KAPAĞI MASURA BİLYA | NEEDLE BEARING | | | ♦ | ♦ | ♦ | ♦ | ♦ | ♦ | ♦ | ♦ |
| | | | (017 981 9410) | | | | | | | | | | | | | |
| 60 | | 005 997 3647 | | 1 | KULE KAPAK KEÇESİ | SEAL RING | | | ♦ | ♦ | ♦ | ♦ | ♦ | ♦ | ♦ | ♦ |
| 61 | | 387 268 1680 | (387 268 0880) | 1 | KULE ARAMA KAPAK CONTASI | SHIFT CASE COVER | | | ♦ | ♦ | ♦ | ♦ | ♦ | ♦ | ♦ | ♦ |
| 62 | | 000470 034000 | | 1 | KULE ARAMA KAPAK TAPASI | EXPANSION PLUG | | | ♦ | ♦ | ♦ | ♦ | ♦ | ♦ | ♦ | ♦ |
| 63 | | 387 268 1150 | (387 268 0150) | 1 | KULE ARAMA KAPAK BURCU | BUSHING | | | ♦ | ♦ | ♦ | ♦ | ♦ | ♦ | ♦ | ♦ |
| 64 | | 000912 008204 | (000912 008098) | 2 | KULE ARAMA KAPAK VİDASI | SCREW | M8X35 | | ♦ | ♦ | ♦ | ♦ | ♦ | ♦ | ♦ | ♦ |
| 64 | | 007984 008038 | | 2 | KULE ARAMA KAPAK VİDASI | SCREW | M8X65 | | ♦ | ♦ | ♦ | ♦ | ♦ | ♦ | ♦ | ♦ |
| 65 | | 389 260 0272 | | 1 | KULE ARAMA KAPAK GÖVDESİ | SHIFT CASE | | | ♦ | ♦ | ♦ | ♦ | ♦ | ♦ | ♦ | ♦ |
| 66 | | 387 268 0250 | | 1 | KULE ARAMA KAPAK BURCU | BUSHING | | | ♦ | ♦ | ♦ | ♦ | ♦ | ♦ | ♦ | ♦ |
| 67 | | 005 997 3547 | | 1 | KULE ARAMA KAPAK KEÇESİ | SEAL RING | | | ♦ | ♦ | ♦ | ♦ | ♦ | ♦ | ♦ | ♦ |
| 68 | | 080705 016003 | | 1 | KULE KAPAK BAĞLANTI SOMUNU | NUT | | | ♦ | ♦ | ♦ | ♦ | ♦ | ♦ | ♦ | ♦ |
| 69 | | 387 268 0152 | | 1 | KULE KAPAK BAĞLANTI PULU | SPACER WASHER | | | ♦ | ♦ | ♦ | ♦ | ♦ | ♦ | ♦ | ♦ |
| 70 | | 387 268 0052 | | 2 | KULE KAPAK BAĞLANTI PULU | SPACER WASHER | | | ♦ | ♦ | ♦ | ♦ | ♦ | ♦ | ♦ | ♦ |
| 71a | K21.06584 | 389 265 0230 | (389 265 0130) | 1 | VİTES ARAYICISI | SELECTOR LEVER | | | ♦ | ♦ | ♦ | ♦ | ♦ | ♦ | ♦ | |
| 71b | K21.03710 | 389 268 0715 | | 1 | VİTES ARAYICISI | SELECTOR LEVER | | | | | | | | | | ♦ |
| 72a | | 000007 004123 | | 1 | VİTES ARAYICI EMNİYET PİMİ | CYLINDRICAL PIN | | | ♦ | ♦ | ♦ | ♦ | ♦ | ♦ | ♦ | |
| 72b | | 308750 010003 | | 1 | VİTES ARAYICI EMNİYET PİMİ | CYLINDRICAL PIN | | | | | | | | | | ♦ |
| 73 | | 006888 005012 | | 1 | KULE KAPAK BAĞLANTI KAMASI | WOODRUFF KEY | | | ♦ | ♦ | ♦ | ♦ | ♦ | ♦ | ♦ | ♦ |
| 74 | | 389 260 2138 | (389 260 0238) | 1 | KULE ARAMA KAPAK BAĞLANTISI | SHAFT | | | ♦ | ♦ | ♦ | ♦ | ♦ | ♦ | ♦ | ♦ |
| 75 | K21.06168 | 389 268 0001 | | Kit | KULE ARAMA KAPAĞI KOMPLE | SELECTOR LEVER KIT | | | ♦ | ♦ | ♦ | ♦ | ♦ | ♦ | ♦ | ♦ |
| 76 | K21.03490 | | | Kit | VİTES KUMANDA KULESİ KOMPLE | SHIFT CONTROL TOWER KIT | | | ♦ | ♦ | ♦ | ♦ | ♦ | ♦ | ♦ | |
| 77 | K21.06303 | 655 260 0178 | | Kit | VİTES KUMANDA KULESİ KOMPLE | SHIFT CONTROL TOWER KIT | | | | | | | | | | ♦ |

NOTES :

NOTLAR :





Original parts names, oem numbers, symbols and descriptions used in this catalogue are for reference purposes only.

# SHIFT CONTROL TOWER MANUAL (LEFT) / VİTES KUMANDA KULESİ MANUEL (SOL) NEW MODEL




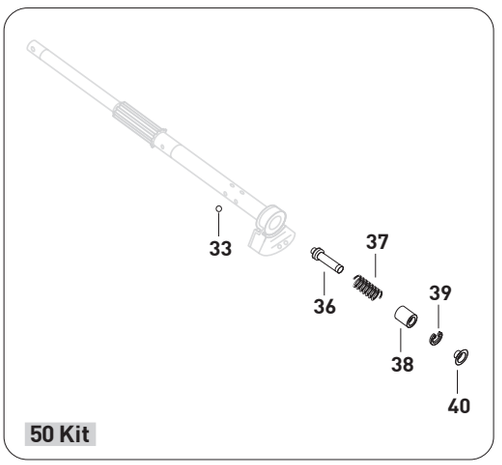


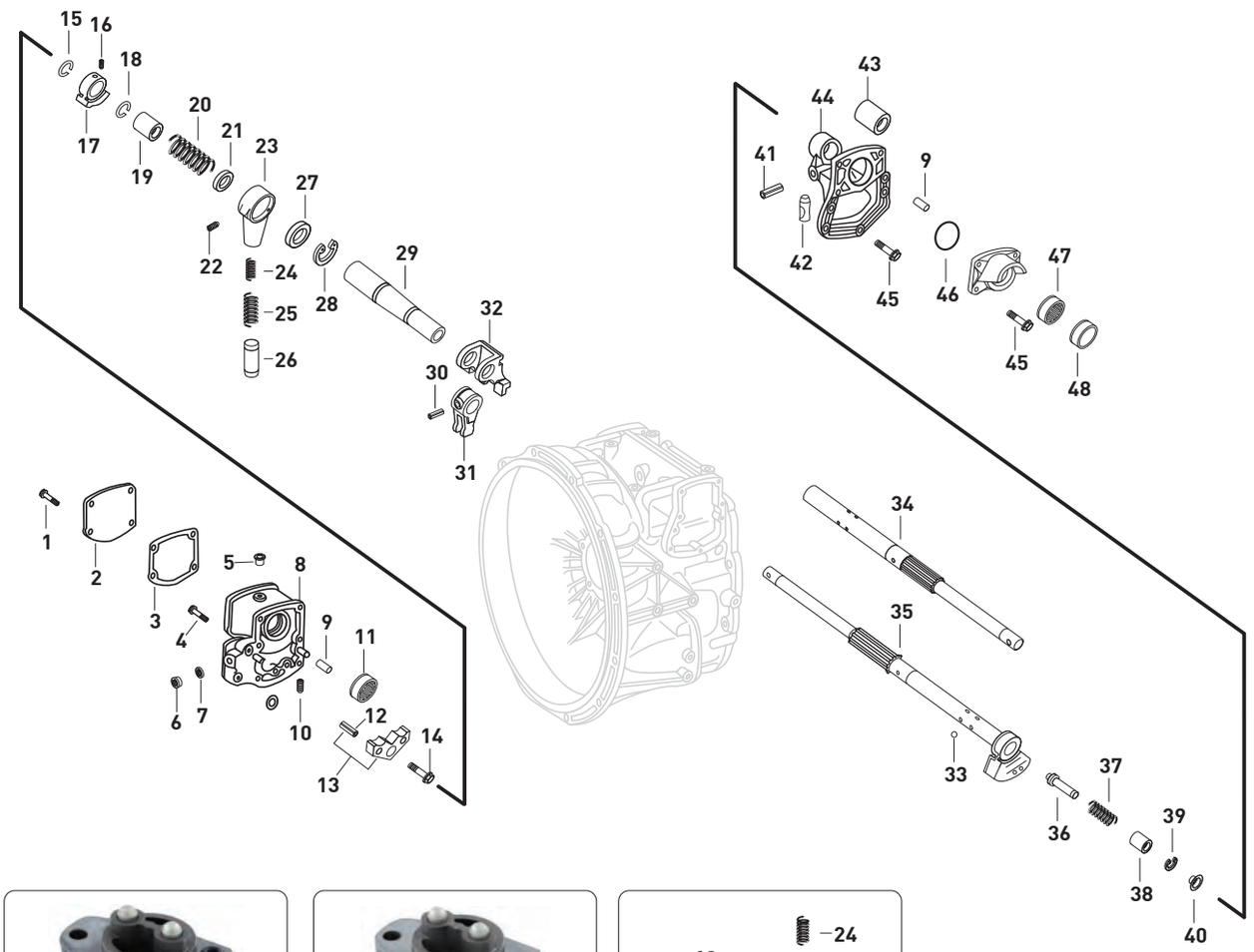








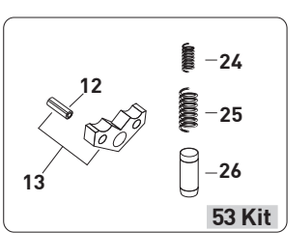




Original parts names, oem numbers, symbols and descriptions used in this catalogue are for reference purposes only.

| Fig. | Kacmaz No | Oem No | Oem Old No | Pcs. | Ürün Tanımı | Description | Sizes | Not | G210-16 | G211-16 | G231-16 | G240-16 | G260-16 | G131-9 | G221-9 |
|---|---|---|---|---|---|---|---|---|---|---|---|---|---|---|---|
| 1 | | 910143 008014 | (990 990 1520) | 4 | KULE KAPAK VİDASI | SCREW | | | ♦ | ♦ | ♦ | ♦ | ♦ | ♦ | ♦ |
| 2 | | 945 268 0357 | (945 268 0057) | 1 | KULE KAPAĞI | COVER | | | ♦ | ♦ | ♦ | ♦ | ♦ | ♦ | ♦ |
| 3 | | 945 268 0180 | | 1 | KULE KAPAK CONTASI | GASKET | | | ♦ | ♦ | ♦ | ♦ | ♦ | ♦ | ♦ |
| 4 | | 910105 008014 | (990 990 1001) | 4 | KULE GÖVDE VİDASI | SCREW | | | ♦ | ♦ | ♦ | ♦ | ♦ | ♦ | ♦ |
| 5 | K21.03204 | 389 261 1433 | (000443 012001) | 1 | KULE GÖVDE SAÇ TAPASI | PLUG | | | ♦ | ♦ | ♦ | ♦ | ♦ | ♦ | ♦ |
| 6 | | 990 990 0315 | (007604 012102) | 2 | GÖVDE HAVALANDIRMA TAPASI | SCREW PLUG | | | ♦ | ♦ | ♦ | ♦ | ♦ | ♦ | ♦ |
| 7 | | 007603 012113 | (990 990 6914) | 2 | GÖVDE HAVALANDIRMA ORİNGİ | O-RING | | | ♦ | ♦ | ♦ | ♦ | ♦ | ♦ | ♦ |
| 8 | | 945 268 4834 | (945 268 2034) | 1 | KULE GÖVDESİ | BEARING COVER | | | | | | | | ♦ | |
| | | | (945 260 0613) | | | | | | | | | | | | |
| 8 | | 945 268 5034 | (945 268 4434) | 1 | KULE GÖVDESİ | BEARING COVER | | | | | | | | | ♦ |
| 8 | | 945 260 2713 | (945 268 4934) | 1 | KULE GÖVDESİ | BEARING COVER | | | ♦ | ♦ | ♦ | ♦ | ♦ | | |
| | | | (945 268 4334) | | | | | | | | | | | | |
| 9 | | 000007 010102 | (000007 010239) | 2 | KULE GÖVDE ORTALAMA PİMİ | CYLINDRICAL PIN | | | ♦ | ♦ | ♦ | ♦ | ♦ | ♦ | ♦ |
| 10 | | 000 990 4677 | | 1 | VİTES KİLİTLEME PİMİ | THREADED PIN | | | ♦ | ♦ | ♦ | ♦ | ♦ | ♦ | ♦ |
| 11 | K21.03851 | 007 981 2110 | (017 981 9110) | 1 | KULE GÖVDE MASURA BİLYA | NEEDLE BEARING | | | ♦ | ♦ | ♦ | ♦ | ♦ | ♦ | ♦ |
| | | | (017 981 9410) | | | | | | | | | | | | |
| 12 | K21.06167 | 308748 006003 | | 2 | VİTES ATLATMA KİLİT PİMİ | CLAMPING PIN | | | ♦ | ♦ | ♦ | ♦ | ♦ | | ♦ |
| 12 | | 601 992 0125 | | 2 | VİTES ATLATMA KİLİT PİMİ | CLAMPING PIN | | | | | | | | ♦ | |
| 13 | K21.06169 | 945 268 0746 | (945 260 0073) | 1 | VİTES ATLATMA KİLİDİ | SHIFTING SEGMENT | | | ♦ | ♦ | ♦ | ♦ | ♦ | ♦ | ♦ |
| 14 | | 000000 007943 | | 1 | KULE GÖVDE VİDASI | SCREW | | | ♦ | ♦ | ♦ | ♦ | ♦ | | ♦ |
| 14 | | 910143 080002 | | 1 | KULE GÖVDE VİDASI | SCREW | | | | | | | | ♦ | |
| 15 | | 912009 018100 | | 1 | KULE SEKMANI | LOCK RING | | | ♦ | ♦ | ♦ | ♦ | ♦ | ♦ | ♦ |
| 16 | | 389 997 0319 | (387 997 0119) | 1 | KUMANDA TOPU EMN.VİDASI | THREADED PIN | | | ♦ | ♦ | ♦ | ♦ | ♦ | ♦ | ♦ |
| 17 | | 945 268 0046 | | 1 | AĞIR SERİ KUMANDA TOPU | SHIFTING SEGMENT | | | ♦ | ♦ | ♦ | ♦ | ♦ | ♦ | ♦ |
| 17 | | 945 268 0146 | | 1 | AĞIR SERİ KUMANDA TOPU | SHIFTING SEGMENT | | | ♦ | ♦ | ♦ | ♦ | ♦ | ♦ | ♦ |
| 18 | | 912009 028200 | | 1 | KULE SEKMANI | SNAP RING | | | ♦ | ♦ | ♦ | ♦ | ♦ | | ♦ |
| 18 | | 000 994 5535 | | 1 | KULE SEKMANI | SNAP RING | | | | | | | | ♦ | |
| 19 | | 945 268 1750 | | 1 | KUMANDA TOPU BURCU | BUSHING | | | ♦ | ♦ | ♦ | ♦ | ♦ | ♦ | ♦ |
| 20 | | 976 993 0801 | | 1 | KUMANDA TOPU BURÇ YAYI | SPRING | | | ♦ | ♦ | ♦ | ♦ | ♦ | ♦ | ♦ |
| 20 | | 945 993 0101 | | 1 | KUMANDA TOPU BURÇ YAYI | SPRING | | | ♦ | ♦ | ♦ | ♦ | ♦ | ♦ | ♦ |
| 21 | | 387 268 1076 | | 1 | KUMANDA TOPU PULU | WASHER | | | ♦ | ♦ | ♦ | ♦ | ♦ | ♦ | ♦ |
| 22 | | 389 997 0419 | (389 997 0019) | 2 | VİTES ATLATMA EMN.VİDASI | THREADED PIN | | | ♦ | ♦ | ♦ | ♦ | ♦ | ♦ | ♦ |
| 23 | K21.06983 | 945 268 0013 | (389 268 0446) | 1 | VİTES ATLATMA GÖVDESİ | SELECTOR BODY | | | ♦ | ♦ | ♦ | ♦ | ♦ | ♦ | ♦ |
| 24 | K21.06165 | 387 993 2201 | | 1 | VİTES ATLATMA YAYI İÇ | SPRING | | | ♦ | ♦ | ♦ | ♦ | ♦ | ♦ | ♦ |
| 25 | K21.06166 | 387 993 2101 | | 1 | VİTES ATLATMA YAYI DIŞ | SPRING | | | ♦ | ♦ | ♦ | ♦ | ♦ | ♦ | ♦ |
| 26 | K21.03487 | 945 268 0474 | (387 268 2374) | 1 | VİTES ATLATMA FİŞEĞİ | LOCKING PIN | | | ♦ | ♦ | ♦ | ♦ | ♦ | ♦ | ♦ |
| | | | (945 268 0974) | | | | | | | | | | | | |
| 26 | K21.93487 | | | 1 | VİTES ATLATMA FİŞEĞİ | LOCKING PIN (Modified) | | | ♦ | ♦ | ♦ | ♦ | ♦ | ♦ | ♦ |
| 27 | | 976 268 0076 | | 1 | VİTES ATLATMA AYAR PULU | WASHER | | | ♦ | ♦ | ♦ | ♦ | ♦ | ♦ | ♦ |
| 28 | | 000471 038002 | | 1 | VİTES ATLATMA SEKMANI | LOCK RING | | | ♦ | ♦ | ♦ | ♦ | ♦ | ♦ | ♦ |
| 29 | | 945 268 0425 | (945 268 1025) | 1 | KULE KOVANI | SHIFTING ROD | | | ♦ | ♦ | ♦ | ♦ | ♦ | ♦ | ♦ |
| 30 | | 000000 000134 | | 1 | VİTES KULE MİL SEÇİCİ PİMİ | CLAMPING PIN | | | ♦ | ♦ | ♦ | ♦ | ♦ | ♦ | ♦ |
| 31 | | 945 268 0233 | | 1 | VİTES KULE MİL SEÇİCİSİ | LEVER | | | ♦ | ♦ | ♦ | ♦ | ♦ | | ♦ |
| 31 | | 947 268 0733 | (947 268 0533) | 1 | VİTES KULE MİL SEÇİCİSİ | LEVER | | | | | | | | ♦ | |
| 32 | | 945 268 0516 | (945 268 0216) | 1 | VİTES KULE MİL LEVYESİ | LEVER | | | ♦ | ♦ | ♦ | ♦ | ♦ | | ♦ |
| 32 | | 945 268 0716 | (947 268 0416) | 1 | VİTES KULE MİL LEVYESİ | LEVER | | | | | | | | ♦ | |
| 33 | K21.06717 | 005401 312000 | | 6 | VİTES KULE MİL BİLYASI | BALL | | | ♦ | ♦ | ♦ | ♦ | ♦ | ♦ | ♦ |
| 34 | K21.07002 | 945 260 8233 | | 1 | VİTES KUMANDA KULE MİLİ | SHIFTING ROD | | | | | | | | ♦ | |
| 34 | K21.06241 | 945 260 8333 | | 1 | VİTES KUMANDA KULE MİLİ | SHIFTING ROD | | | ♦ | ♦ | ♦ | ♦ | ♦ | | ♦ |
| 35 | | 945 260 0733 | | 1 | VİTES KUMANDA KULE MİLİ | SHIFTING ROD | | | ♦ | ♦ | ♦ | ♦ | ♦ | | |
| 36 | K21.07005 | 945 268 0274 | | 2 | KULE TAZYİK SİBOBU | PIN | | | ♦ | ♦ | ♦ | ♦ | ♦ | ♦ | ♦ |
| 37 | K21.07004 | 945 993 0401 | (389 993 5501) | 2 | KULE TAZYİK SİBOP YAYI | SPRING | | | ♦ | ♦ | ♦ | ♦ | ♦ | ♦ | ♦ |
| 38 | K21.07006 | 945 268 2250 | (945 268 1850) | 2 | KULE TAZYİK BURCU | BUSHING | | | ♦ | ♦ | ♦ | ♦ | ♦ | ♦ | ♦ |

NOTES :

NOTLAR :



Original parts names, oem numbers, symbols and descriptions used in this catalogue are for reference purposes only.

# SHIFT CONTROL TOWER MANUAL (LEFT) / VİTES KUMANDA KULESİ MANUEL (SOL) NEW MODEL




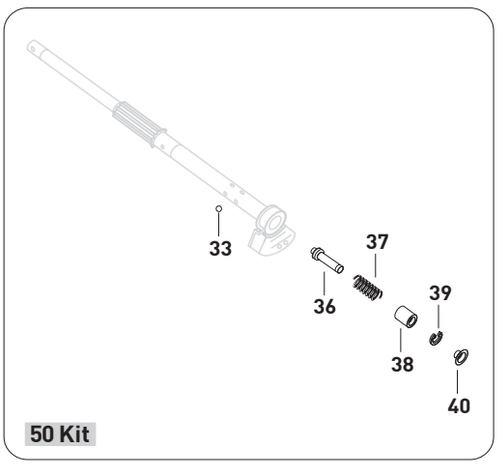


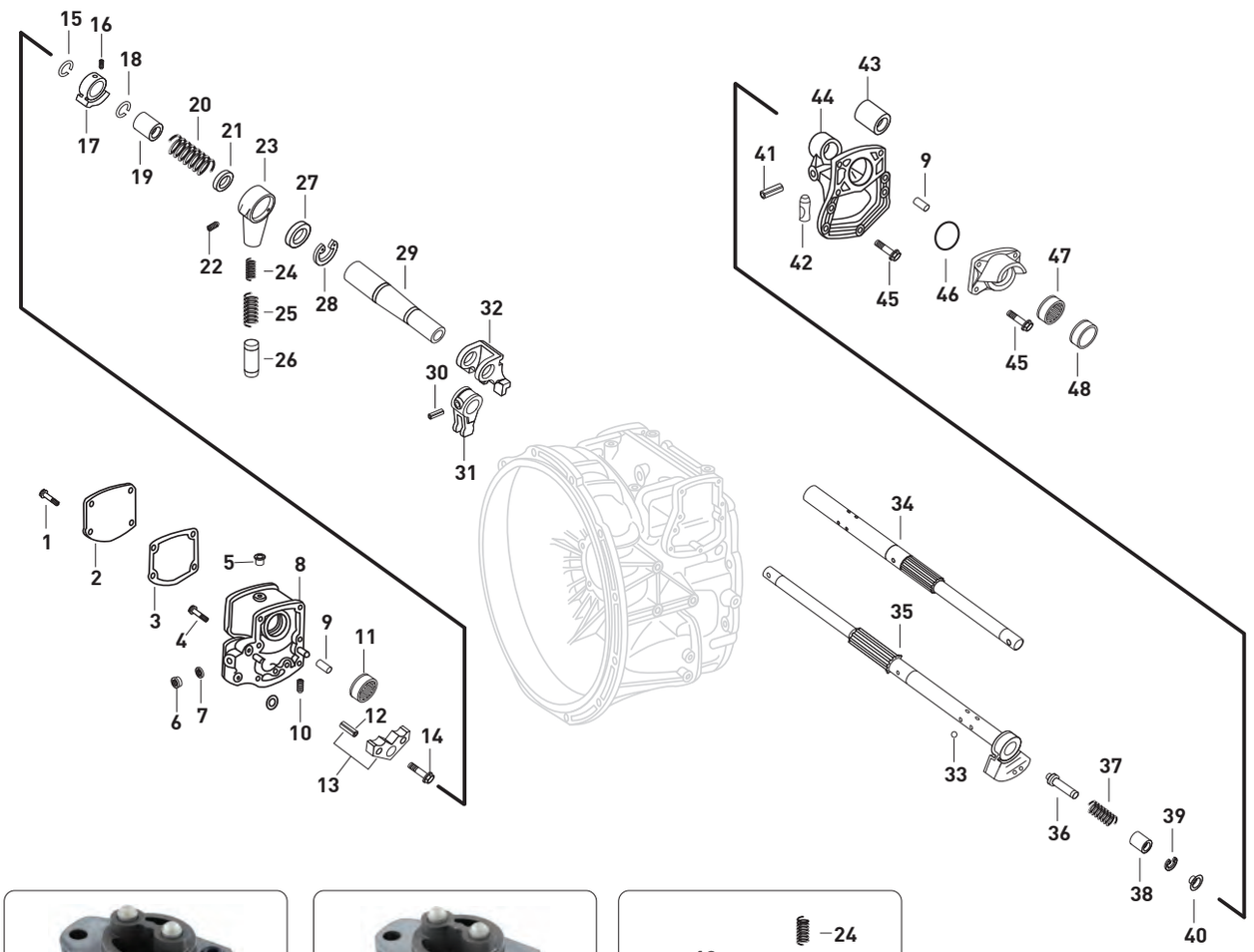








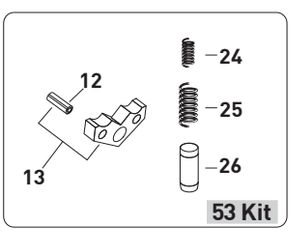




Original parts names, oem numbers, symbols and descriptions used in this catalogue are for reference purposes only.

| Fig. | Kacmaz No | Oem No | Oem Old No | Pcs. | Ürün Tanımı | Description | Sizes | Not | G210-16 | G211-16 | G231-16 | G240-16 | G260-16 | G131-9 | G221-9 |
|---|---|---|---|---|---|---|---|---|---|---|---|---|---|---|---|
| 39 | K21.07007 | 000472 019001 | | 1 | KULE TAZYİK SEKMANI | LOCK RING | | | ♦ | ♦ | ♦ | ♦ | ♦ | ♦ | ♦ |
| 40 | K21.03404 | 389 261 1733 | | 1 | KULE TAZYİK KAPAĞI | PLUG | | | ♦ | ♦ | ♦ | ♦ | ♦ | ♦ | ♦ |
| 41 | | 001481 004027 | | 1 | EMNİYET PİMİ | CLAMPING SLEEVE | | | ♦ | ♦ | ♦ | ♦ | ♦ | ♦ | ♦ |
| 42 | | 945 268 0174 | | 1 | VİTES KİLİTLEME PİMİ | PIN | | | ♦ | ♦ | ♦ | ♦ | ♦ | ♦ | ♦ |
| 43 | | 945 268 2650 | (945 268 2950) | 1 | KULE GÖVDE BURCU | BUSHING | | | ♦ | ♦ | ♦ | ♦ | ♦ | ♦ | ♦ |
| 43 | | 945 268 0250 | | 1 | KULE GÖVDE BURCU | BUSHING | | | ♦ | ♦ | ♦ | ♦ | ♦ | ♦ | ♦ |
| 44 | | 945 260 4713 | (945 268 4634) | 1 | KULE GÖVDESİ | BEARING COVER | | | ♦ | ♦ | ♦ | ♦ | ♦ | ♦ | ♦ |
| | | | (945 268 2834) | | | | | | | | | | | | |
| 45 | | 000000 000631 | | 4 | KULE GÖVDE VİDASI | SCREW | | | ♦ | ♦ | ♦ | ♦ | ♦ | ♦ | ♦ |
| 46 | | 021 997 7848 | (021 997 8948) | 1 | KULE KAPAK ORİNGİ | O-RING | | | ♦ | ♦ | ♦ | ♦ | ♦ | ♦ | ♦ |
| 47 | K21.03850 | 009 981 0510 | (017 981 9310) | 1 | KULE KAPAĞI MASURA BİLYA | NEEDLE BEARING | | | ♦ | ♦ | ♦ | ♦ | ♦ | ♦ | ♦ |
| | | | (017 981 9010) | | | | | | | | | | | | |
| 48 | | 021 997 3747 | | 1 | KULE KAPAK KEÇESİ | SEAL RING | | | ♦ | ♦ | ♦ | ♦ | ♦ | ♦ | ♦ |
| 49 | K21.03491 | | | Kit | VİTES KUMANDA KULESİ KOMPLE | SHIFT CONTROL TOWER KIT | | | ♦ | ♦ | ♦ | ♦ | ♦ | | ♦ |
| 50 | K21.07001 | | | Kit | KULE MİLİ FİŞEK TAKIMI | REPAIR KIT | | | ♦ | ♦ | ♦ | ♦ | ♦ | ♦ | ♦ |
| 51 | K21.06432 | 002 260 6157 | (002 260 4157) | Kit | ŞANZIMAN VENTİLİ | VALVE | | | ♦ | ♦ | ♦ | ♦ | ♦ | ♦ | ♦ |
| | | | (002 260 2457) | | | | | | | | | | | | |
| | | | (002 260 2357) | | | | | | | | | | | | |
| 52 | K21.06433 | 002 260 6257 | (002 260 3057) | Kit | ŞANZIMAN VENTİLİ | VALVE | | | ♦ | ♦ | ♦ | ♦ | ♦ | ♦ | ♦ |
| | | | (002 260 2957) | | | | | | | | | | | | |
| 53 | K21.07045 | | | Kit | KULE VİTES ATLATMA SETİ | REPAIR KIT | | | ♦ | ♦ | ♦ | ♦ | ♦ | ♦ | ♦ |

NOTES :

NOTLAR :





Original parts names, oem numbers, symbols and descriptions used in this catalogue are for reference purposes only.

## SHIFT CONTROL TOWER MANUAL / VİTES KUMANDA KULESİ HPS

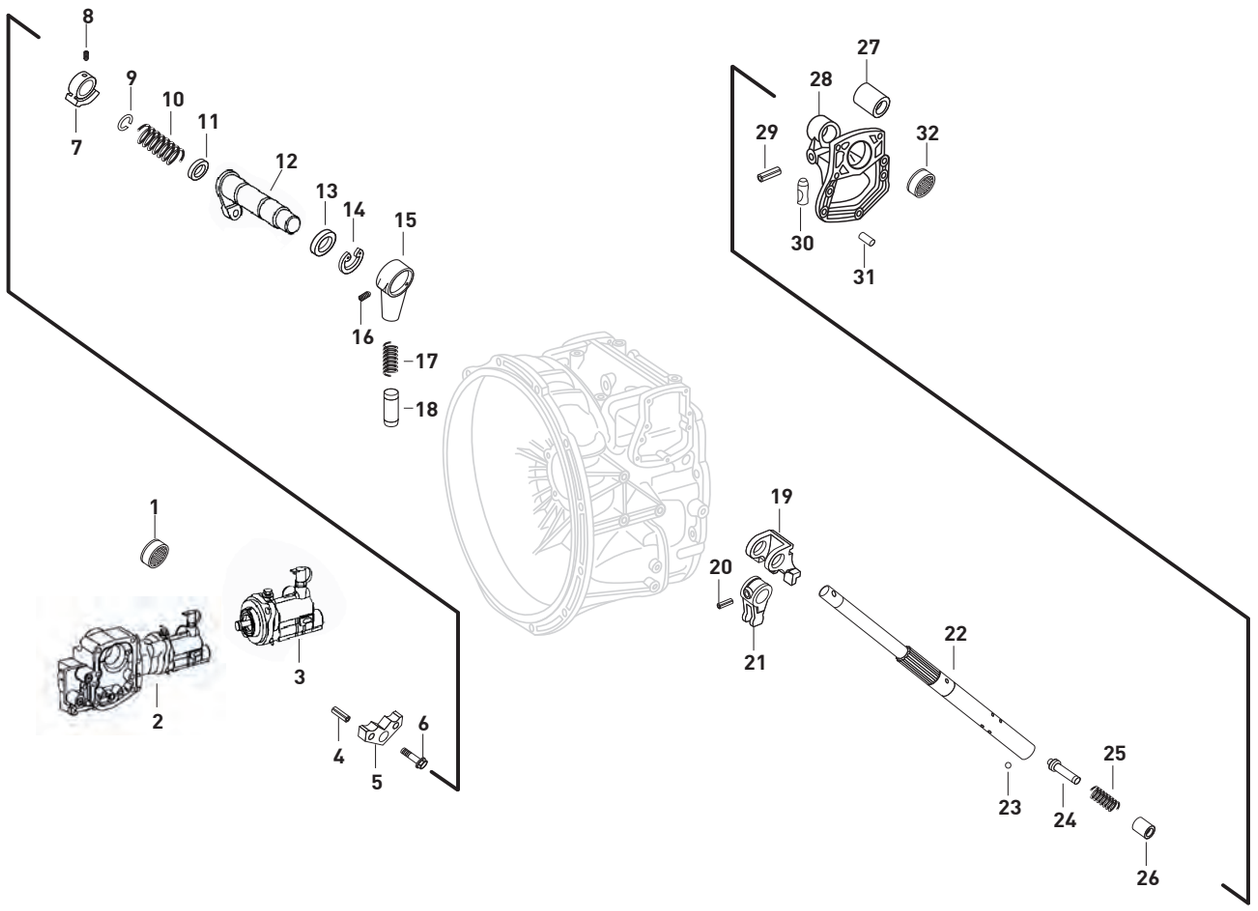




Original parts names, oem numbers, symbols and descriptions used in this catalogue are for reference purposes only.

| Fig. | Kacmaz No | Oem No | Oem Old No | Pcs. | Ürün Tanımı | Description | Sizes | Not | G210-16 | G211-16 | G231-16 | G240-16 | G260-16 | G131-9 | G221-9 |
|---|---|---|---|---|---|---|---|---|---|---|---|---|---|---|---|
| 1 | | 021 981 4710 | (013 981 7110) | 1 | VİTES KULE BİLYASI | BALL | | | ♦ | ♦ | ♦ | ♦ | ♦ | ♦ | ♦ |
| | | | (018 981 1010) | | | | | | | | | | | | |
| | | | (018 981 1510) | | | | | | | | | | | | |
| 2 | | 001 260 9663 | | 1 | VİTES KULE SOL KOMPLE | SHIFT CONTROL TOWER KIT | | | ♦ | ♦ | ♦ | ♦ | ♦ | ♦ | ♦ |
| 2 | | 002 260 3763 | | 1 | VİTES KULE SOL KOMPLE | SHIFT CONTROL TOWER KIT | | | ♦ | ♦ | | ♦ | ♦ | | |
| 3 | | 001 260 8863 | | 1 | VİTES KULE KUMANDASI | GEAR TOWER CONTROLLER | | | ♦ | ♦ | ♦ | ♦ | ♦ | ♦ | ♦ |
| 4 | K21.06167 | 308748 006003 | | 2 | VİTES ATLATMA KİLİT PİMİ | CLAMPING PIN | | | ♦ | ♦ | ♦ | ♦ | ♦ | ♦ | ♦ |
| 5 | | 945 268 1546 | | 1 | VİTES ATLATMA KİLİDİ | SHIFTING SEGMENT | | | ♦ | ♦ | ♦ | ♦ | ♦ | ♦ | ♦ |
| 6 | | 000000 007943 | | 1 | KULE GÖVDE VİDASI | SCREW | | | ♦ | ♦ | ♦ | ♦ | ♦ | ♦ | ♦ |
| 7 | | 945 268 1046 | (945 268 2046) | 1 | AĞIR SERİ KUMANDA TOPU | SHIFTING SEGMENT | | | ♦ | ♦ | ♦ | ♦ | ♦ | ♦ | ♦ |
| 8 | | 308748 008000 | | 1 | KUMANDA TOPU EMN.VİDASI | THREADED PIN | | | ♦ | ♦ | ♦ | ♦ | ♦ | ♦ | ♦ |
| 9 | | 912009 028200 | | 1 | KULE SEKMANI | SNAP RING | | | ♦ | ♦ | ♦ | ♦ | ♦ | ♦ | ♦ |
| 10 | | 945 993 0601 | | 1 | KUMANDA TOPU BURÇ YAYI | SPRING | | | ♦ | ♦ | ♦ | ♦ | ♦ | ♦ | ♦ |
| 11 | | 387 268 1076 | | 1 | KUMANDA TOPU PULU | WASHER | | | ♦ | ♦ | ♦ | ♦ | ♦ | ♦ | ♦ |
| 12 | | 947 268 0432 | (947 268 0332) | 1 | KULE KOVANI | SHIFTING ROD | | | ♦ | ♦ | ♦ | ♦ | ♦ | ♦ | ♦ |
| 13 | | 976 268 0076 | | 1 | VİTES ATLATMA AYAR PULU | WASHER | | | ♦ | ♦ | ♦ | ♦ | ♦ | ♦ | ♦ |
| 14 | | 000471 038002 | | 1 | VİTES ATLATMA SEKMANI | LOCK RING | | | ♦ | ♦ | ♦ | ♦ | ♦ | ♦ | ♦ |
| 15 | | 389 268 0013 | | 1 | VİTES ATLATMA GÖVDESİ | HOUSING | | | ♦ | ♦ | ♦ | ♦ | ♦ | ♦ | ♦ |
| 16 | | 389 997 0419 | (389 997 0019) | 2 | VİTES ATLATMA EMN.VİDASI | THREADED PIN | | | ♦ | ♦ | ♦ | ♦ | ♦ | ♦ | ♦ |
| 17 | K21.06170 | 389 993 8501 | | 1 | VİTES ATLATMA YAYI İÇ | SPRING | | | ♦ | ♦ | ♦ | ♦ | ♦ | ♦ | ♦ |
| 18 | K21.06171 | 945 268 2074 | (389 268 2974) | 1 | VİTES ATLATMA FİŞEĞİ | PIN | | | ♦ | ♦ | ♦ | ♦ | ♦ | ♦ | ♦ |
| | | | (389 268 2374) | | | | | | | | | | | | |
| | | | (389 268 2474) | | | | | | | | | | | | |
| 19 | | 945 268 0233 | | 1 | VİTES KULE MİL SEÇİCİSİ | SHIFTING FINGER | | | ♦ | ♦ | ♦ | ♦ | ♦ | ♦ | ♦ |
| 20 | | 000000 000134 | | 1 | VİTES KULE MİL SEÇİCİ PİMİ | CLAMPING PIN | | | ♦ | ♦ | ♦ | ♦ | ♦ | ♦ | ♦ |
| 21 | | 945 268 0516 | (945 268 0216) | 1 | VİTES KULE MİL LEVYESİ | LEVER | | | ♦ | ♦ | ♦ | ♦ | ♦ | ♦ | ♦ |
| 22 | K21.06716 | 945 268 2729 | (945 268 2829) | 1 | VİTES KUMANDA KULE MİLİ | SHIFTING ROD | | | ♦ | ♦ | ♦ | ♦ | ♦ | ♦ | ♦ |
| | | | (945 268 2929) | | | | | | | | | | | | |
| | | | (945 268 3829) | | | | | | | | | | | | |
| 22 | | 945 268 0929 | (945 268 0629) | 1 | VİTES KUMANDA KULE MİLİ | SHIFTING ROD | | | ♦ | ♦ | ♦ | ♦ | ♦ | ♦ | ♦ |
| 23 | K21.06717 | 005401 312000 | | 6 | VİTES KULE MİL BİLYASI | BALL | | | ♦ | ♦ | ♦ | ♦ | ♦ | ♦ | ♦ |
| 24 | K21.06505 | 945 268 1474 | | 2 | KULE TAZYİK SİBOBU | PIN | | | ♦ | ♦ | ♦ | ♦ | ♦ | ♦ | ♦ |
| 25 | K21.06703 | 945 993 3901 | | 2 | KULE TAZYİK SİBOP YAYI | SPRING | | | ♦ | ♦ | ♦ | ♦ | ♦ | ♦ | ♦ |
| 26 | | 945 268 3129 | | 1 | KULE TAZYİK BURCU | BUSHING | | | ♦ | ♦ | ♦ | ♦ | ♦ | ♦ | ♦ |
| 27 | | 945 268 2650 | (945 268 2950) | 1 | KULE GÖVDE BURCU | BUSHING | | | ♦ | ♦ | ♦ | ♦ | ♦ | ♦ | ♦ |
| 28 | | 945 268 7634 | | 1 | KULE GÖVDESİ | COVER | | | ♦ | ♦ | ♦ | ♦ | ♦ | ♦ | ♦ |
| 29 | | 001481 004027 | | 1 | EMNİYET PİMİ | CLAMPING SLEEVE | | | ♦ | ♦ | ♦ | ♦ | ♦ | ♦ | ♦ |
| 30 | | 945 268 0174 | | 1 | VİTES KİLİTLEME PİMİ | PIN | | | ♦ | ♦ | ♦ | ♦ | ♦ | ♦ | ♦ |
| 31 | | 000007 010301 | | 2 | SİLİNDİRİK PİM | PIN | | | ♦ | ♦ | ♦ | ♦ | ♦ | ♦ | ♦ |
| 32 | | 608 981 0910 | (016 981 2810) | 1 | VİTES KULE BİLYASI | BALL | | | ♦ | ♦ | ♦ | ♦ | ♦ | ♦ | ♦ |

NOTES :

NOTLAR :





Original parts names, oem numbers, symbols and descriptions used in this catalogue are for reference purposes only.

# RELEASE BEARING

# DEBRİYAJ BİLYASI

GEARBOX APPLICATION MANUAL - VEHICLE APPLICATION
KULLANILDIĞI ŞANZIMAN MANUEL - KULLANILDIĞI ARAÇ

**Actros 1 - 950/952/953/954**

**Actros 2/3 - 930/932/933/934**

**Axor 375/940/942/943/944/950/952/953,954/958**

**Atego 1/2 950/952/953/954,958**

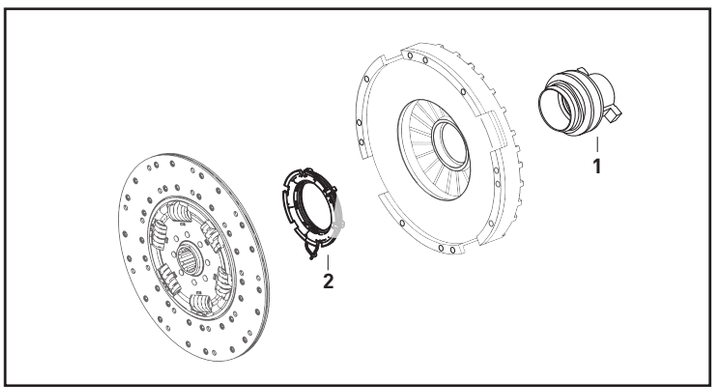








| Fig. | Kacmaz No | MB No | Sachs No | Sachs No | Pcs. | Ürün Tanımı | Description |
|---|---|---|---|---|---|---|---|
| 1 | K21.06970 | 002 250 8215 | 3100 000 003 | 34 3151 000 610 | 1 | DEBRİYAJ BİLYASI (KISA TİP) | RELEASE BEARING (SHORT) |
| | | 002 250 6815 | 34 3100 000 079 | 34 3151 000 560 | | | |
| | | 002 250 3715 | 34 3151 260 001 | 34 3151 000 519 | | | |
| | | 002 250 7715 | 34 3151 000 762 | 34 3151 000 156 | | | |
| 2 | K21.06999 | 002 250 4115 | 3180 000 009 | 3180 000 001 | kit | DEBRİYAJ BİLYASI PUL TAKIMI | MOUNTING KIT |

GEARBOX APPLICATION MANUAL - VEHICLE APPLICATION
KULLANILDIĞI ŞANZIMAN MANUEL - KULLANILDIĞI ARAÇ

**Actros 1 950/952/953/954**

**Actros 2/3 930/932/933/934**

**Atego 1/2 950/952/953/954,958**

**BM 664 - BM 634/664**

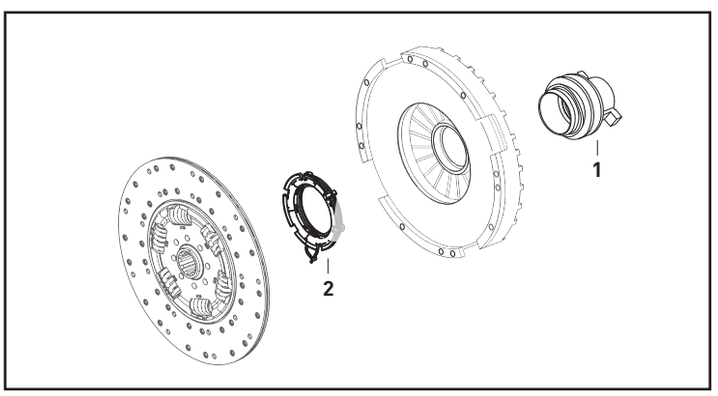








| Fig. | Kacmaz No | MB No | Sachs No | Sachs No | Pcs. | Ürün Tanımı | Description |
|---|---|---|---|---|---|---|---|
| 1 | K21.06971 | 002 250 4715 | 3100 002 255 | 34 3100 000 053 | 1 | DEBRİYAJ BİLYASI (UZUN TİP) | RELEASE BEARING (LONG) |
| | | 002 250 7815 | 3100 002 155 | 34 3100 000 078 | | | |
| | | 002 250 9815 | 3151 259 031 | 34 3100 000 085 | | | |
| | | | 34 3100 000 061 | 34 3100 000 137 | | | |
| 2 | K21.06999 | 002 250 4115 | 3180 000 009 | 3180 000 001 | kit | DEBRİYAJ BİLYASI PUL TAKIMI | MOUNTING KIT |



**Original parts names, oem numbers, symbols and descriptions used in this catalogue are for reference purposes only.**

# NOTES / NOTLAR